1411 S. POTOMAC

FIRE ALARM SYSTEM SHOP DRAWINGS FOR:

BUILDING CLASSIFICATIONS AND CODES

OCCUPANCY GROUP:	B
USE:	OFFICE
CONSTRUCTION TYPE:	TYPE–II
STORIES:	BASEMENT + 4 FLOORS
SPRINKLERED:	FULLY
REQUIREMENTS:	REQUIRED PER 2015 IFC
CODES:	2015 IFC 2015 IBC 2015 IMC 2013 NFPA 72 ~~2014~~ NFPA 70

SYSTEM TYPE AND MONITORING

SYSTEM CLASSIFICATION:	(NFPA 72, CHAPTER 26), REMOTE STATION
SYSTEM TYPE:	CONVENTIONAL/ADDRESSABLE
WIRING CLASSIFICATION:	NAC – CLASS B SLC – CLASS B COMMUNICATION RISER – CLASS A
NOTIFICATION TYPE:	TEMPORAL PATTERN
MONITORING:	THIS SYSTEM IS AND WILL CONTINUE TO BE MONITORED BY A REMOTE SUPERVISING STATION, PER NFPA 72 CHAPTER 26, SECTION 3.
MONITORING COMPANY:	CFP (800)662–1711
ACCOUNT:	A21–0964

SCOPE OF WORK

1. REPLACE FOUR (4) CONVENTIONAL SMOKE DETECTORS ON ZONE 1 WITH ADDRESSABLE SMOKE DETECTORS.
2. REPLACE FIVE (5) CONVENTIOANL HEAT DETECTORS ON ZONE 1 WITH ADDRESSABLE HEAT DETECTORS.
3. PROVIDE AND INSTALL THREE (3) RELAYS FOR ELEVATOR RECALL FUNCTIONS.

INDEX

FA–00 COVER PAGE
- GENERAL INFORMATION
- BUILDING REQUIREMENTS AND CODES
- SCOPE OF WORK

FA–01 FIRE ALARM PLAN
- LEGEND
- MOUNTING HEIGHTS
- GENERAL NOTES
- KEY MAP

FA–02 DETAILS
- WIRE CODE CHART
- ONE–LINE RISER DIAGRAM
- BATTERY CALC
- MATRIX – SEQUENCE OF OPS

PROJECT:

ELEVATOR MODERNIZATION UPGRADES
1411 S. POTOMAC STREET
AURORA, CO 80012

OWNER/GC:

DEI ELECTRIC CONTRACTORS
10645 COUNTY ROAD 50
COLOGNE, MN 55322
PH:(952)466–5937
FAX:(612)280–0593
DAVID DUBBE

FIRE ALARM CONTRACTOR

FIRE ALARM SERVICES, INC.
4800 W. 60TH AVENUE
ARVADA, CO 80003
PH:(303)466–8800
FAX:(303)466–8820
SHANNON SMITH

FIRE ALARM DESIGNER:

FIRE ALARM SERVICES, INC.
4800 W. 60TH AVENUE
ARVADA, CO 80003
PH:(303)466–8800
FAX:(303)466–8820
STEVEN SPRAGUE

Audible/Visual occupant notification device spacing shall be field verified for compliance in Public Use/Common Use Areas. Exam rooms and shared offices are examples of Public Use/ Common Use Areas. 2015 IFC 907.5

Items determined to be in violation of code during inspection are required to be corrected; this review does not grant approval of code violations.

Deviation from reviewed plans may result in an hourly fee to review the field changes for code compliance.

Field Inspection consultation is available upon request; call (303) 739-7420 to schedule a consultation.

COA Adopted Codes for this project:
ICC-2015 - NEC-2017
NFPA 13-2013 - NFPA 72-2013
COA Amendments 22 & 66

GENERAL NOTES

1. FIRE ALARM SYSTEMS CANNOT BE COMBINED WITH BURGLAR ALARM SYSTEMS.
2. THE INSTALLER IS REQUIRED TO COORDINATE WITH THE MECHANICAL CONTRACTOR TO DETERMINE INSTALLATION OF SMOKE DETECTORS OR SENSORS (I.E., NOT CLOSER THAN 3 FEET FROM ANY SUPPLY/RETURN DIFFUSER AND THAT ADDITIONAL DETECTION MAY BE REQUIRED DUE TO THE RELOCATION OR SPACING ADJUSTMENT OF DETECTORS, AS A RESULT).
3. FIRE ALARM DEVICES MUST BE PLACED IN PROTECTED AREAS WITH AMBIENT TEMPERATURE RANGING FROM 32 DEGREES TO 120 DEGREES F.
4. DO NOT PLACE SMOKE DETECTORS WITHIN 3 FEET OF AIR SUPPLY REGISTERS AND DIFFUSERS.
5. FIRE ALARM SYSTEM SHALL BE MONITORED BY A CLASS 1 CENTRAL STATION.
6. FIRE ALARM CONTROL PANEL WILL BE PLACED IN THE LOCATION SPECIFIED WITHIN THE PLAN SUBMITTAL UNLESS APPROVED BY THE LIFE SAFETY FIELD INSPECTOR.
7. CITY OF AURORA BUILDING CODES DIVISION DOES NOT GRANT APPROVAL FOR ANY VIOLATIONS OF ADOPTED FIRE CODE. CODE VIOLATIONS UNCOVERED DURING FIELD INPECTIONS MUST BE CORRECTED.
8 PER THE ~~2009~~ IFC AND THE ~~2008~~ NEC THE INSTALLER MUST REQUEST A ROUGH WIRING INSPECTION ON THE FIRE ALARM SYSTEM PRIOR TO REQUESTING A FIRE ALARM FINAL INSPECTION.
9. THE CONTRACTOR SHALL CONDUCT A "PRE–TEST" OF THE PROJECT AREA PRIOR TO SCHEDULING AN ACCEPTANCE TEST WITH THE BUILDING CODES DIVISION.
10. REMOTE ALARM INDICATORS SHALL BE PROVIDED FOR ANY FIRE ALARM DETECTOR LOCATED IN A CONCEALED LOCATION WITH A NORMALLY LOCKED DOOR.
11. AT THE TIME OF FINAL FIRE ALARM INSPECTION, THE SYSTEM MUST BE SUPERVISED/MONITORED BY A CLASS 1 CENTRAL MONITORING AGENCY.
12. THE INSTALLING CONTRACTOR (OR DESIGNEE) MUST PROVIDE ALL NECESSARY TESTING EQUIPMENT AND PEROFRM ALL TESTING REQUIRED BY THE LIFE SAFETY FIELD INSPECTOR.
13. IN–DUCT SMOKE DETECTORS INSTALLED IN CONCEALED LOCATIONS OR, WHERE THE DETECTORS ALARM INDICATOR IS NOT READILY VISIBLE TO RESPONDING PERSONNEL SHALL BE PROVIDED WITH A REMOTE INDICATOR, REMOTE TEST STATION AND PLACARDING.
14. ALL NEW OR EXISTING FIRE ALARM SYSTEMS MUST BE CONNECTED TO ANY EXTERIOR HORN AND STROBE DEVICE. IF THE BUILDING IS FIRE SPRINKLED, A GENERAL ALARM ACTIVATION AT THE FIRE ALARM CONTROL PANEL WILL ACTIVATE THE EXTERIOR HORN AND STROBE. SILENCING THE PANEL MUST ALLOW THE VISUAL DEVICE TO CONTINUE UNTIL THE PANEL IS RESET.
15. FIRE ALARM SYSTEMS SHALL INCLUDE BOTH AUDIBLE AND VISUAL ALARMS. VISUAL ALARMS WILL BE REQUIRED IN ALL ACCESSIBLE PUBLIC AND COMMON– USE AREAS PER THE 2015 IFC AND THE ~~2003~~ ANSI A117.1 STANDARD.
16. PROVIDE A PRIMARY AND SECONDARY POWER SUPPLY FOR THE FIRE ALARM SYSTEM PER THE 2015 IFC, SECTION 907.5 AND THE 2013 NFPA 72.

Fire Alarm Services, Inc.
4800 W. 60th Avenue
Arvada, CO 80003

(303)466–8800 (Phone)
(303)466–8820 (Fax)
contactus@fasonline.cc (E–Mail)
www.fasonline.cc

City of Aurora Building Division
Project: *1411 S Potomac St*
Address: *1411 S Potomac St*
Occupancy Group: *IBC B*
Construction Type: *IBC Type IIB-Spk*
RSN: *1231966*
Permit: *2017-1345213-LT*
City of Aurora Building Division
Reviewed for Code Compliance
By: *Ted Caviness*
Date: *August 28, 2017*
2015 INTERNATIONAL CODES & 2017 NEC

Steven Sprague
NICET Fire Alarm Systems
Level III
Certification #137416
Date: 8/15/17

Fire Alarm SERVICES, INC.
4800 W. 60TH AVENUE
ARVADA, CO 80003
www.fasonline.cc
phone: 303–466–8800
fax: 303–466–8820
email: contactus@fasonline.cc

REVISIONS		
NO.	DATE	

DRAWN BY: S. SPRAGUE
DATE: 8/14/17
APPR. BY:
DATE:

PROJECT TITLE: FIRE ALARM SYSTEM TENANT FINISH FOR: ELEVATOR MODERNIZATION UPGRADES
BUILDING NAME & ADDRESS: 1411 S. POTOMAC ST. AURORA, CO 80012
PROJECT NUMBER: 17011350

FIRE ALARM & DETECTION SYSTEM
DRAWING TITLE: BASEMENT & 3RD FLOOR COVER PAGE
SCALE: N/A

PROJECT SHEET TITLE
FA–00

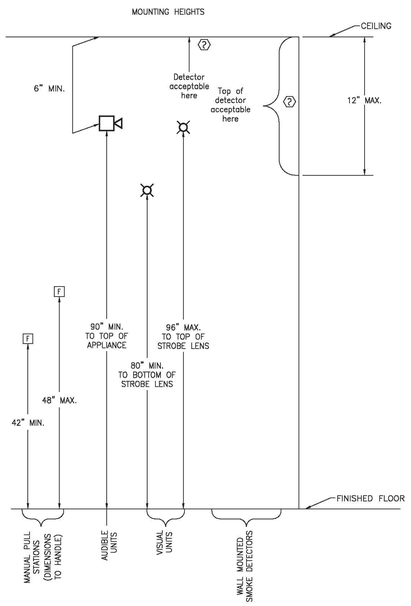

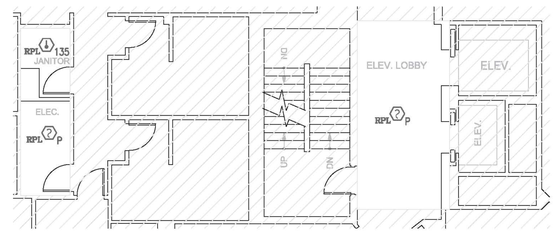

3RD FLOOR FIRE ALARM PLAN

SCALE: 1/8" = 1'-0"

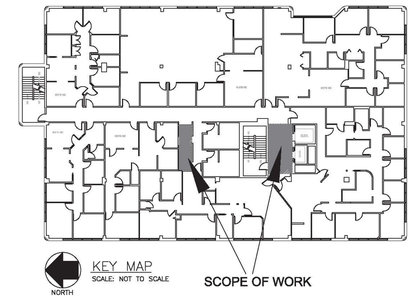

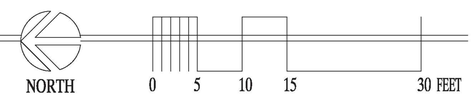

GENERAL NOTES:

1. THE CEILING IS A TYPICAL 9' A.F.F. DROPPED CEILING WITH NO SLOPES.

FIRE ALARM SYMBOLS LEGEND

EXISTING	DESCRIPTION	PROPOSED
	STROBE – Wall Mount or CM = Ceiling Mount	
	SMOKE DETECTOR – x = photo, ion	
	HORN STROBE – Wall Mount or CM = Ceiling Mount	
	HORN = Wall Mount or CM = Ceiling Mount	
	REMOTE LED	
	END OF LINE RESISTOR	
	BOOSTER PANEL	
	PULL STATION	
	FIREMAN'S PHONE JACK	
	HEAT DETECTOR – x =135, 200, ROR	
	FLOW SWITCH	
	TAMPER SWITCH	
	DUCT DETECTOR – x = photo, ion	
	MONITOR MODULE	

NOTIFICATION APPLIANCE CIRCUIT NUMBER
NOTIFICATION APPLIANCE PANEL NUMBER
DEVICE NUMBER

NAC1-2-3

POWER EXPANDER NUMBERING

RL = RELOCATED DEVICES
RR = REMOVE AND REINSTALL
RPL = REMOVE AND REPLACE
J = J-BOX

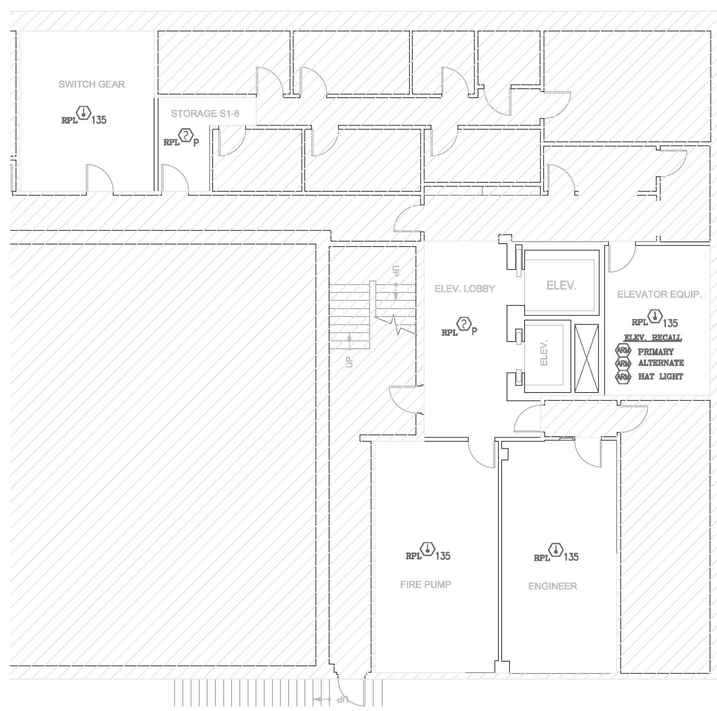

BASEMENT FIRE ALARM PLAN

SCALE: 1/8" = 1'-0"

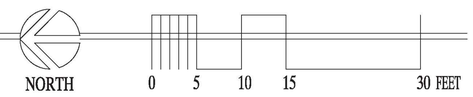

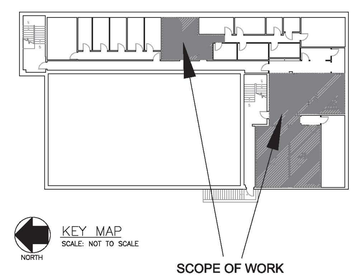

City of Aurora Building Division
Reviewed for Code Compliance
By: Ted Caviness
Date: August 28, 2017
2015 INTERNATIONAL CODES & 2017 NEC

Steven Sprague
NICET Fire Alarm Systems
Level III
Certification #137416
Date: 8/15/17

Fire Alarm SERVICES, INC.
4800 W. 60TH AVENUE
ARVADA, CO 80003
phone: 303-466-8800
fax: 303-466-8820
www.fasonline.cc email: contactus@fasonline.cc

NO.	DATE	REVISIONS

DRAWN BY: S. SPRAGUE
DATE: 8/14/17
APPR. BY:
DATE:

PROJECT TITLE: FIRE ALARM SYSTEM TENANT FINISH FOR: ELEVATOR MODERNIZATION UPGRADES

BUILDING NAME & ADDRESS: 1411 S. POTOMAC ST. AURORA, CO 80012

PROJECT NUMBER: 17011350

FIRE ALARM & DETECTION SYSTEM

DRAWING TITLE: BASEMENT & 3RD FLOOR FIRE ALARM PLAN

SCALE: AS SHOWN

PROJECT SHEET TITLE: FA-01

Permit: 2017-1345213-17
ROH: 12139A6
Page 2 of 20

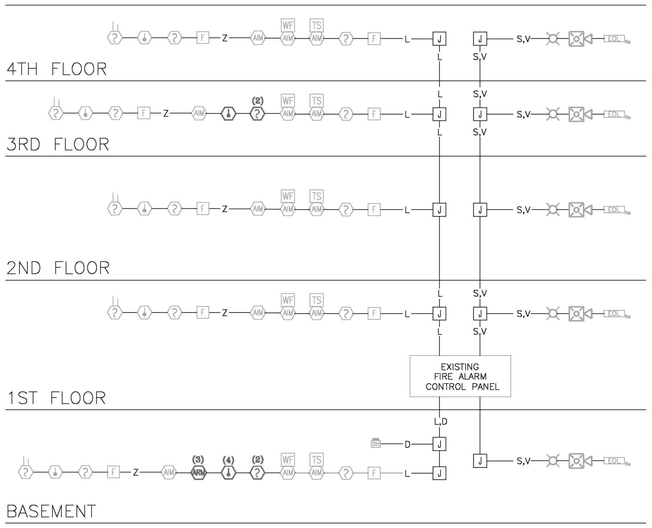

ONE-LINE RISER DIAGRAM

FIRE ALARM WIRE COLOR CODE CHART				
Code	Description	Wire Type	Color (+)	Color (−)
AC	120VAC Power Wiring	3#12 AWG Solid (w/ Green Ground)	Black (hot)	White (neu)
A	Annunciator Wiring	#18 AWG Twisted/Shielded Pair	Red	Black
D	Door Holder Wiring	2#14 AWG Solid	Red	Black
L	SLC Wiring (Signaling Line Circuit)	2#18 AWG Solid	Red	Black
P	24VDC Power Wiring	2#16 AWG Solid	Red	Black
R	Remote Light/Test Wiring	2#18 AWG Solid	Red	Black
S	Notification Appliance (Horns) Wiring	2 or 4#14 AWG Solid	Red	Black
S	Notification Appliance (Speaker) Wiring	2#16 AWG Twisted/Shielded Pair	Red	Black
T	Telephone Circuit Wiring	2#16 AWG Twisted/Shielded Pair	Red	Black
V	Notification Appliance (Strobe) Wiring	2 or 4#14 AWG Solid	Red	Black
X	Auxiliary Circuit (Relay) Wiring	2#14 AWG Solid	Red	Black
Z	IDC Wiring (Initiating Device Circuit)	2#18 AWG Solid	Red	Black
WIRE TYPE CLASS & STYLE	SLC – CLASS B	NAC – CLASS B		

1411 S. POTOMAC BUILDING SEQUENCE OF OPERATIONS

SYSTEM OUTPUTS

SYSTEM INPUTS		FACP Annunciation						Notif.			Fire Safety					Monitoring				
		Actuate Common Alarm Signal Indicator	Actuate Audible Alarm Signal	Actuate Common Supervisory Signal Indicator	Actuate Audible Supervisory Signal	Actuate Common Trouble Signal Indicator	Actuate Audible Common Trouble Signal	Display Change of Status	Actuate Evacuation Signals (Horn/Strobes)	Actuate Exterior Horn/Strobe	Silence Audible Signal (Horns)	Release Magnetically Held Smoke Doors	Recall Elevator(s) to 1st Floor – Primary Recall	Recall Elevator(s) to 2nd Floor – Alternate Recall	Actuate Elevator Hat Light	Shut Down Air Handling Units	Transmit Fire Alarm Signal to Supervising Station	Transmit Trouble Signal to Supervising Station	Transmit Supervisory Signal to Supervising Station	Transmit Waterflow Signal to Supervising Station	
		A	B	C	D	E	F	G	H	I	J	K	L	M	N	O	P	Q	R	S	
1	Manual Pull Station	X	X					X	X	X		X					X				1
2	Smoke Sensor – Basement Elev Machine	X	X					X	X	X		X	X		X		X				2
3	Smoke Sensor – Basement Elev Lobby	X	X					X	X	X		X	X				X				3
4	Smoke Sensor – 1st Floor Elev Lobby	X	X					X	X	X		X		X			X				4
5	Smoke Sensor – 2nd Floor Elev Lobby	X	X					X	X	X		X	X				X				5
6	Smoke Sensor – 3rd Floor Elev Lobby	X	X					X	X	X		X	X				X				6
7	Smoke Sensor – 4rd Floor Elev Lobby	X	X					X	X	X		X	X				X				7
8	Smoke Sensor – All Other Locations	X	X					X	X	X		X					X				8
9	Duct Smoke Sensor			X	X			X								X			X		9
10	Heat Sensor	X	X					X	X	X		X	X				X				10
11	Sprinkler Waterflow	X	X					X	X	X		X					X				11
12	Sprinkler Control Valve			X	X			X											X		12
13	FACP AC Power Failure					X	X	X				X						X			13
14	FACP Low Battery					X	X	X										X			14
15	Open Circuit					X	X	X										X			15
16	Ground Fault					X	X	X										X			16
17	Notification Appliance Circuit Short					X	X	X										X			17
18	Alarm Signal Silence										X										18
		A	B	C	D	E	F	G	H	I	J	K	L	M	N	O	P	Q	R	S	

New and existing fire sprinkler systems shall activate exterior horn/strobe upon both general alarm and flow switch activation. When fire alarm panel is silenced, the interior and exterior strobes will continue until fire alarm panel is reset.

BATTERY CALCULATIONS

FOR: Aurora Medical Center
1411 S. Potomac Street

HOURS OF SUPERVISION: 24 HOURS
MINUTES OF ALARM: 5 MINUTES

PANEL: EST QS1 Intelligent Control Panel

ITEM	QTY	PART NUMBER	DESCRIPTION	Device Supervisory Current	Device Alarm Current	Total Supervisory Current	Total Alarm Current
1	1	EXISITING	CPU/LCD Display Unit	0.117000	0.135000	0.117000	0.135000
2	1	EXISITING	Two Line Dialer	0.013000	0.026000	0.013000	0.026000
3	1	EXISITING	Power Supply Card	0.072000	0.096000	0.072000	0.096000
4	1	EXISITING	Signature Loop Intelligent Controller	0.033000	0.057000	0.033000	0.057000
5	1	EXISITING	CPU/LCD Display Unit (remote annunciator)	0.105000	0.123000	0.105000	0.123000
6	1	EXISITING	LED/Switch Card	0.001000	0.022500	0.001000	0.022500
			TOTAL:			0.341000	0.459500

PERIPHERAL:

ITEM	QTY	PART NUMBER	DESCRIPTION	Device Supervisory Current	Device Alarm Current	Total Supervisory Current	Total Alarm Current
1	12	EXISTING	Conventional Heat Detector	0.000050	0.130000	0.000600	1.560000
2	4	EXISTING	Conventional Duct Detector	0.000050	0.130000	0.000200	0.520000
3	11	EXISTING	Conventional Pull Station	0.000000	0.000000	0.000000	0.000000
4	14	EXISTING	Conventional Smoke Detector.	0.000050	0.130000	0.000700	1.820000
5	20	EXISTING	Single Input Module (Monitor Module)	0.000250	0.000400	0.005000	0.008000
6	1	EXISTING	Electromagnetic Door Holder	0.000000	0.015000	0.000000	0.015000
7	11	EXISTING	Addressable Pull Station	0.000250	0.000400	0.002750	0.004400
8	11	EXISTING	Addressable Smoke Detector	0.000045	0.000045	0.000495	0.000495
9	4	SIGA-PS	Addressable Smoke Detector	0.000045	0.000045	0.000180	0.000180
10	5	SIGA-HFS	Addressable Heat Detector	0.000045	0.000045	0.000225	0.000225
11	3	SIGA-CR	Addressable Relay	0.000100	0.000100	0.000300	0.000300
			TOTAL:			0.010450	3.928600

SUPERVISORY:		
PANEL:	0.341000	AMPS
PERIPHERAL	0.010450	AMPS
SUB-TOTAL:	0.351450	AMPS
X HOURS OF SUPERVISORY:	24.0000	HOURS
SUB-TOTAL:	8.434800	AMP HOURS
ALARM:		
PANEL:	0.459500	AMPS
PERIPHERAL:	3.928600	AMPS
SUB-TOTAL:	4.388100	AMPS
X MINUTES OF ALARM:	0.08333	HOURS
SUB-TOTAL:	0.365675	AMP HOURS
TOTALS:		
TOTAL SUPERVISORY:	8.434800	AMP HOURS
TOTAL ALARM:	0.365675	AMP HOURS
TOTAL:	8.800475	AMP HOURS
TOTAL PLUS SAFETY FACTOR(20%)	10.56057	AMP HOURS
Batteries Supplied – 1 Set of:	20.00000	AMP HOURS

City of Aurora Building Division
Reviewed for Code Compliance
By: Ted Caviness
Date: August 28, 2017
2015 INTERNATIONAL CODES & 2017 NEC

Steven Sprague
NICET Fire Alarm Systems
Level III
Certification #137416
Date: 8/15/17

Fire Alarm Services, Inc.
4800 W. 60TH AVENUE
ARVADA, CO 80003
www.fasonline.cc
phone: 303-466-8800
fax: 303-466-8820
email: contactus@fasonline.cc

REVISIONS

NO.	DATE

DRAWN BY: S. SPRAGUE
DATE: 8/14/17
APPR. BY:
DATE:

FIRE ALARM SYSTEM TENANT FINISH FOR: ELEVATOR MODERNIZATION UPGRADES

PROJECT TITLE

BUILDING NAME & ADDRESS: 1411 S. POTOMAC ST. AURORA, CO 80012

PROJECT NUMBER: 170111350

FIRE ALARM & DETECTION SYSTEM

DRAWING TITLE: BASEMENT & 3RD FLOOR DETAILS

SCALE: N/A

PROJECT SHEET TITLE
FA-02

Permit: 2017-1345213-LT
FOH: 1219466
Page 3 of 20

Fire Alarm Services, Inc.
4800 West 60th Avenue
Arvada, CO 80003

Phone (303) 466-8800
Fax (303) 466-8820
contactus@fasonline.cc

Fire Alarm System Addition at:

Project: Elevator Modernization Upgrades
1411 S. Potomac Street, Basement & 3rd Floor
Aurora, CO 80012

Scope of Work:

1. Replace four (4) conventional smoke detectors on zone 1 with new addressable smoke detectors.
2. Replace five (5) conventional heat detectors on zone 1 with new addressable heat detectors.
3. Provide and install three (3) relays for elevator recall.

Steven Sprague
NICET Fire Alarm Systems
Level III
Certification #137416

Date: 8/15/17

Overview

Signature Series Model SIGA-HFS and SIGA-HRS Intelligent Heat Detectors gather analog information from their fixed temperature and/or rate-of-rise heat sensing elements and converts it into digital signals. The detector's on-board microprocessor measures and analyzes these signals. It compares the information to historical readings and time patterns to make an alarm decision. Digital filters remove signal patterns that are not typical of fires. Unwanted alarms are virtually eliminated.

The microprocessor in each detector provides four additional benefits - Self-diagnostics and History Log, Automatic Device Mapping, Stand-alone Operation and Fast, Stable Communication.

Standard Features

Note: *Some features described here may not be supported by all control systems. Check your control panel's Installation and Operation Guide for details.*

- 70 foot (21.3 meter) spacing
- 15° F (9° C)/min rate-of-rise/135° F (57° C) ft. and 135° F (57 ° C) fixed temperature type
- Intelligent detector c/w integral microprocessor
- Non-volatile memory
- Automatic device mapping
- Electronic addressing
- Identification of defective detectors
- Twin RED/GREEN status LEDs
- Standard, relay, fault isolator, and audible mounting bases
- Designed and manufactured to ISO 9001 standards

Intelligent Heat Detectors

SIGA-HFS & SIGA-HRS

Application Notes Available

Signature Series Overview

Self-diagnostics and History Log - Each Signature Series detector constantly runs self-checks to provide important maintenance information. The results of the self-check are automatically updated and permanently stored in the detector's non-volatile memory. This information is accessible for review any time at the control panel, PC, or by using the SIGA-PRO Signature Program/Service Tool.

In the unlikely event that an unwanted alarm does take place, the control panel's history file can be called up to help isolate the problem and prevent it from happening again.

Automatic Device Mapping - The loop controller learns where each device's serial number address is installed relative to other devices on the circuit. This mapping feature provides supervision of each device's installed location to prevent a detector from being reinstalled (after cleaning etc.) in a different location from where it was originally. The history log for the detector remains relevant and intact regardless of its new location.

The Signature Series Data Entry Program also uses the mapping feature. With interactive menus and graphic support, the wired circuits between each device can be examined. Layout or "as-built" drawing information showing wire branches (T-taps), device types and their address are stored on disk for printing hard copy. This takes the mystery out of the installation. The preparation of as-built drawings is fast and efficient.

Stand-alone Operation - A decentralized alarm decision by the detector is guaranteed. On-board intelligence permits the detector to operate in stand-alone mode. If loop controller CPU communications fail for more than four seconds, all devices on that circuit go into stand-alone mode. The circuit acts like a conventional alarm receiving circuit. Each detector on the circuit continues to collect and analyze information from its surroundings. Both the SIGA-HRS and SIGA-HFS detectors alarm if the ambient temperature increases to 135°F (57°C) or for the SIGA-HRS only, the temperature increases at a rate exceeding 15°F (9°C)/minute. If the detector is mounted to a relay base, the relay operates. Similarly, if it is mounted to an audible base, the on-board horn sounds.

Fast Stable Communication - On-board intelligence means less information needs to be sent between the detector and the loop controller. Other than regular supervisory polling response, the detector only needs to communicate with the control panel when it has something new to report. This provides very fast control panel response time and allows a lower baud rate (speed) to be used for communication on the circuit. The lower baud rate offers several advantages including:

- less sensitivity to circuit wire characteristics
- less sensitivity to noise glitches on the cable
- less emitted noise from the data wiring
- twisted or shielded wiring is not required

Electronic Addressing - The loop controller electronically addresses each detector, saving valuable time during system commissioning. Setting complicated switches or dials is not required. Each detector has its own unique serial number stored in its on-board memory. The loop controller identifies each device on the circuit and assigns a "soft" address to that device's serial number. If desired, detectors can be addressed using the SIGA-PRO Signature Program/Service Tool.

Installation Spacing - The SIGA-HFS (fixed temperature) and the SIGA-HRS (fixed temperature/rate-of-rise combination) intelligent heat detectors are rated for installation at up to 70 foot (21.3 meter) spacing. These detectors may be installed in rooms with ambient temperatures up to 100°F (38°C).

Status LEDs - Twin LEDs are visible from any direction. A flashing GREEN LED shows normal system polling from the loop controller. A flashing RED LED means the detector is in alarm state. Both LEDs on steady shows alarm state - stand-alone mode. Normal GREEN LED activity is not distracting to building occupants, but can be quickly spotted by a maintenance technician.

Quality and Reliability - GE Security detectors are manufactured in North America to strict international ISO 9001 standards. All electronics utilize surface mount technology (SMT) for smaller size and greater immunity to RF noise. A conformal coating is used for humidity and corrosion resistance. All critical contacts are gold plated.

Installation

Signature Series detectors mount to North American 1-gang boxes, 3-1/2 inch or 4 inch octagon boxes, and to 4 inch square electrical boxes 1-1/2 inches (38 mm) deep. They mount to European BESA and 1-gang boxes with 60.3 mm fixing centers.

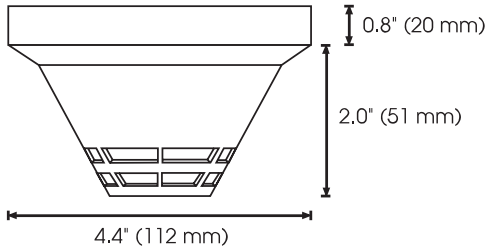

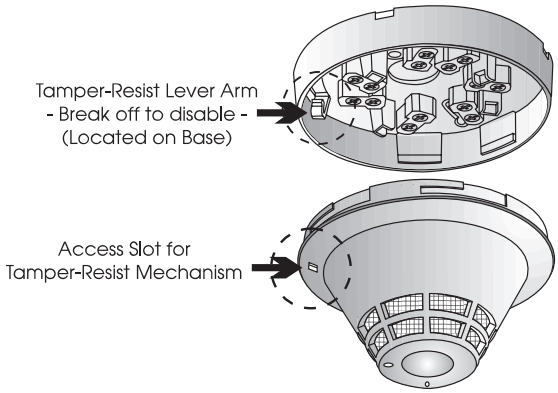

Permit: 2017-1345213-LT
RSN: 1231966
Page 6 of 20

Application

The table below shows six standard test fires used to rate the sensitivity of smoke and heat detectors. The table indicates that no single sensing element is suited for all test fires.

GE Security recommends that this detector be installed according to latest recognized edition of national and local fire alarm codes.

Test Fire	SIGA-IS Ion	SIGA-PS Photo	SIGA-HRS and SIGA-HFS Rate-of-Rise/ Fixed Temp.	SIGA-PHS Photo Heat 3D	SIGA-IPHS Ion/Photo/Heat 4D
Open Wood	**optimum**	unsuitable	**optimum**	very suitable	**optimum**
Wood Pyrolysis	suitable	**optimum**	unsuitable	**optimum**	**optimum**
Smouldering Cotton	very suitable	**optimum**	unsuitable	**optimum**	**optimum**
Poly Urethane Foam	very suitable	very suitable	suitable	very suitable	**optimum**
n-Heptane	**optimum**	very suitable	very suitable	**optimum**	**optimum**
Liquid Fire without Smoke	unsuitable	unsuitable	**optimum**	very suitable	very suitable

Typical Wiring

The detector mounting bases will accept #18 AWG (0.75mm²), #16 (1.0mm²), #14 AWG (1.5mm²), and #12 AWG (2.5mm²) wire sizes.

Note: Sizes #16 AWG (1.0mm²) and #18 AWG (0.75mm²) are preferred for ease of installation. See Signature Loop Controller catalog sheet for detailed wiring requirement specifications.

Standard Detector Base, SIGA-SB, SIGA-SB4

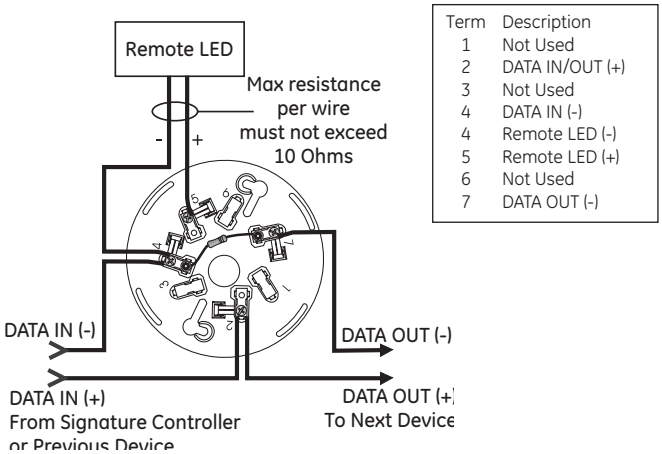

Relay Detector Base, SIGA-RB, SIGA-RB4

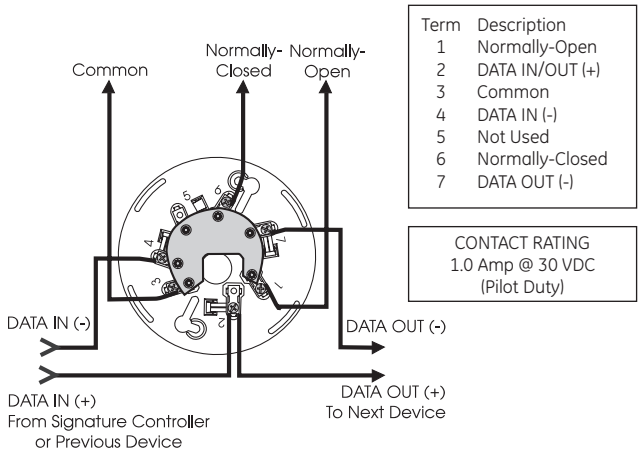

Isolator Detector Base, SIGA-IB, SIGA-IB4

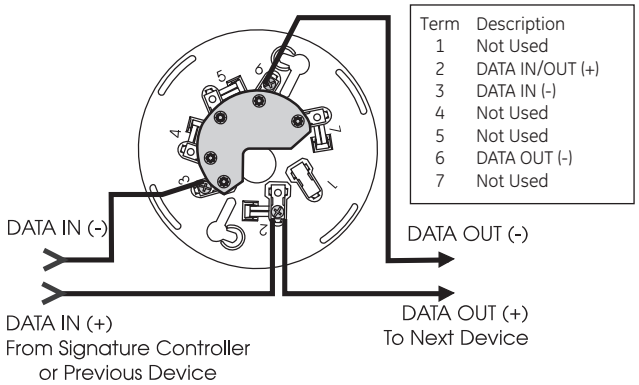

Audible Detector Base, SIGA-AB4G

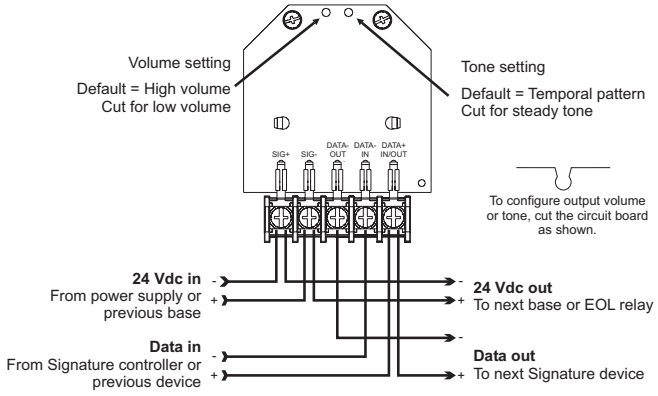

Permit: 2017-1345213-LT
RSN: 1231966
Page 7 of 20

Accessories

All detector mounting bases have wiring terminals that are accessible from the "room-side" after mounting the base to the electrical box. The bases mount to North American 1-gang boxes and to 3½ inch or 4 inch octagon boxes, 1½ inches (38 mm) deep. They also mount to European BESA and 1-gang boxes with 60.3 mm fixing centers. The SIGA-SB4, SIGA-RB4, and SIGA-IB4 mount to North American four inch square electrical boxes in addition to the above boxes. They include the SIGA-TS4 Trim Skirt which is used to cover the "mounting ears" on the base. The SIGA-AB4G mounts to a 4" sqare box only.

SIGA-AB4G
Audible Base

SIGA-SB
Standard Base

SIGA-IB
Isolator Base

SIGA-RB
Relay Base

SIGA-LED
Remote LED

Standard Base SIGA-SB, SIGA-SB4 - This is the basic mounting base for GE Security Signature Series detectors. The SIGA-LED Remote LED is supported by the Standard Base.

Relay Base SIGA-RB, SIGA-RB4 - This base includes a relay. Normally open or closed operation is selected during installation. The dry contact is rated for 1 amp (pilot duty) @ 30 Vdc. The relay's position is supervised to avoid accidentally jarring it out of position. The SIGA-RB can be operated as a control relay if programmed to do so at the control panel (EST3 V. 2 only). The relay base does not support the SIGA-LED Remote LED.

Audible Base SIGA-AB4G - This base is designed for use where localized or group alarm signaling is required. When the detector senses an alarm condition, the audible base emits a local alarm signal. The optional SIGA-CRR Polarity Reversal Relay can be used for sounding to other audible bases on the same 24 Vdc circuit.

Relay and Audible Bases operate as follows:

- at system power-up or reset, the relay is de-energized
- when a detector is installed in the base with the power on, the relay energizes for four seconds, then de-energizes
- when a detector is removed from a base with the power on, the relay is de-energized
- when the detector enters the alarm state, the relay is energized.

Isolator Base SIGA-IB, SIGA-IB4 - This base includes a built-in line fault isolator for use on Class A circuits. A detector must be installed for it to operate. The isolator base does not support the SIGA-LED Remote LED.

The isolator operates as follows:

- a short on the line causes all isolators to open within 23 msec
- at 10 msec intervals, beginning on one side of the Class A circuit nearest the loop controller, the isolators close to provide the next isolator down the line with power
- if the isolator next to the short closes, it reopens within 10 msec.

The process repeats beginning on the other side of the loop controller.

Remote LED SIGA-LED - The remote LED connects to the SIGA-SB or SIGA-SB4 Standard Base only. It features a North American size 1-gang plastic faceplate with a white finish and red alarm LED.

SIGA-TS4 Trim Skirt - Supplied with 4 inch bases, it can also be ordered separately to use with the other bases to help hide surface imperfections not covered by the smaller bases.

Warnings & Cautions

This detector will not operate without electrical power. As fires frequently cause power interruption, we suggest you discuss further safeguards with your fire protection specialist.

This detector will NOT sense fires that start in areas where heat cannot reach the detector. Heat from fires in walls, roofs, or on the opposite side of closed doors may not reach the detector to alarm it.

The heat sensor in this device only provides a source of information to supplement the information provided by photoelectric or ionization smoke detectors which may be located nearby. The heat detector by itself does NOT provide life safety protection. Under no circumstances should heat detectors be relied on as the sole means of fire protection.

Compatibility

The SIGA-HFS and SIGA-HRS detectors are compatible only with GE Security's Signature Loop Controller.

Permit: 2017-1345213-LT
RSN: 1231966
Page 8 of 20

Specifications

Catalog Number	SIGA-HFS	SIGA-HRS
Heat Sensing Element	Fixed Temperature	Fixed & Temperature/ Rate-of-Rise
Alarm Point	Alarms at 135°F (57°C) Ambient	Alarms at 135°F (57°C) Ambient or Temp. increase above 15°F (9°C) per min.
UL Listed Detector Spacing	70 feet (21.3 meters) center to center spacing	
Operating and Storage Environment	Operating Temp: 32°F to 100°F (0°C to 38°C) Storage Temp: -4°F to 140°F (-20°C to 60°C) Humidity: 0 to 93% RH, Non-Condensing	
Operating Voltage	15.2 to 19.95 Vdc (19 Vdc nominal)	
Operating Current	Quiescent: 45µA @ 19 V Alarm: 45µA @ 19V Emergency Stand-alone Alarm Mode: 18mA Pulse Current: 100 µA (100 msec)	
Construction & Finish	High Impact Engineering Polymer - White	
Compatible Mounting Bases	SIGA-SB Standard Base, SIGA-RB Relay Base, SIGA-IB Isolator Base, SIGA-AB4, SIGA-AB4G Audible Bases	
LED Operation	On-board Green LED - Flashes when polled On-board Red LED - Flashes when in alarm; Both LEDs - Glow steady when in alarm (stand-alone) Compatible Remote Red LED (model SIGA-LED) Flashes when in alarm	
Compatibility	Use With: SIGNATURE Loop Controller	
Address Requirements	Uses one device address	
Agency Listings	UL, ULC, MEA, CSFM	

Ordering Information

Catalog Number	Description	Ship Wt. lbs (kg)
SIGA-HFS	Intelligent Fixed Temperature Heat Detector - UL/ULC Listed	0.5 (0.23)
SIGA-HRS	Intelligent Fixed Temperature/Rate-of-Rise Heat Detector - UL/ULC Listed	
Accessories		
SIGA-SB	Detector Mounting Base	0.2 (.09)
SIGA-SB4	4-inch Detector Mounting Base c/w SIGA-TS Trim Skirt	
SIGA-RB	Detector Mounting Base w/Relay	
SIGA-RB4	4-inch Detector Mounting Base /w Relay c/w SIGA-TS Trim Skirt	
SIGA-IB	Detector Mounting Base w/Fault Isolator	
SIGA-IB4	4-inch Detector Mounting Base w/ Fault Isolator c/w SIGA-TS Trim Skirt	
SIGA-LED	Remote Alarm LED	
SIGA-AB4G	Audible (Sounder) Base	0.3 (0.15)
SIGA-TS4	Trim Skirt (supplied with 4-inch bases)	0.1 (.04)

Permit: 2017-1345213-LT
RSN: 1231966
Page 9 of 20

GE
Security

U.S.
T 888-378-2329
F 866-503-3996

Canada
T 519 376 2430
F 519 376 7258

Asia
T 852 2907 8108
F 852 2142 5063

Australia
T 61 3 9259 4700
F 61 3 9259 4799

Europe
T 32 2 725 11 20
F 32 2 721 86 13

Latin America
T 305 593 4301
F 305 593 4300

www.gesecurity.com/est

© 2006 General Electric Company
All Rights Reserved

Signature Series is a Trademark
of GE Security.

imagination at work

Permit: 2017-1345213-LT
RSN: 1231966
Page 10 of 20

Overview

The Signature Series Model SIGA-PS Intelligent Photoelectric Smoke Detector gathers analog information from its smoke sensing element and converts it into digital signals. The detector's on-board microprocessor measures and analyzes these signals. It compares the information to historical readings and time patterns to make an alarm decision. Digital filters remove signal patterns that are not typical of fires. Unwanted alarms are virtually eliminated.

The microprocessor in each detector provides four additional benefits - Self-diagnostics and History Log, Automatic Device Mapping, Stand-alone Operation and Fast, Stable Communication.

Self-diagnostics and History Log - Each Signature Series detector constantly runs self-checks to provide important maintenance information. The results of the self-check are automatically updated and permanently stored in the detector's non-volatile memory

Automatic Device Mapping - The loop controller learns where each device's serial number address is installed relative to other devices on the circuit. The mapping feature provides supervision of each device's installed location to prevent a detector from being reinstalled (after cleaning etc.) in a different location from where it was originally.

Stand-alone Operation - A decentralized alarm decision by the detector is guaranteed. On-board intelligence permits the detector to operate in stand-alone mode. If loop controller CPU communications fail for more than four seconds, all devices on that circuit go into stand-alone mode. The circuit acts like a conventional alarm receiving circuit.

Fast Stable Communication - On-board intelligence means less information needs to be sent between the detector and the loop controller. Other than regular supervisory polling response, the detector only needs to communicate with the loop controller when it has something new to report.

Standard Features

- Integral microprocessor
- Non-volatile memory
- Automatic mapping device
- Electronic addressing
- Environmental compensation
- Intelligent detector
- Wide 0.67% to 3.77%/ft. sensitivity range
- Twenty pre-alarm sensitivity values, set in 5% increments
- Identification of dirty or defective detectors
- Automatic day/night sensitivity adjustment
- Twin RED/GREEN status LEDs
- Standard, relay, fault isolator, and audible mounting bases
- Designed and manufactured to ISO 9001 standards

Intelligent Photoelectric Smoke Detector

SIGA-PS

Application Notes Available

Permit: 2017-1345213-LT
RSN: 1231966
Page 11 of 20

Installation

Signature Series detectors mount to North American 1-gang boxes, 3-1/2 inch or 4 inch octagon boxes, and to 4 inch square electrical boxes 1-1/2 inches (38 mm) deep. They mount to European BESA and 1-gang boxes with 60.3 mm fixing centers.

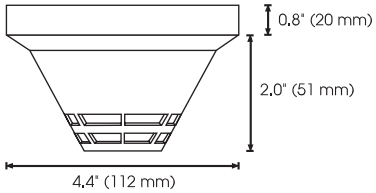

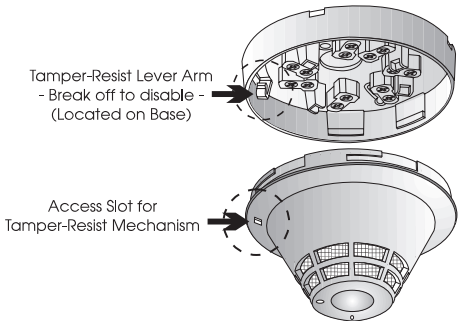

Testing & Maintenance

Each detector automatically identifies when it is dirty or defective and causes a "dirty detector" message. The detector's sensitivity measurement can also be transmitted to the loop controller. A sensitivity report can be printed to satisfy NFPA sensitivity measurements which must be conducted at the end of the first year and every two years thereafter.

The user-friendly maintenance program shows the current state of each detector and other pertinent messages. Single detectors may be turned off temporarily from the control panel. Availability of maintenance features is dependent on the fire alarm system used. Scheduled maintenance (Regular or Selected) for proper detector operation should be planned to meet the requirements of the Authority Having Jurisdiction (AHJ). Refer to current NFPA 72 and ULC CAN/ULC 536 standards.

Compatibility

The SIGA-PS detectors are compatible only with the Signature Loop Controller.

Warnings & Cautions

This detector will not operate without electrical power. As fires frequently cause power interruption, we suggest you discuss further safeguards with your fire protection specialist.

This detector will NOT sense fires that start in areas where smoke cannot reach the detector. Smoke from fires in walls, roofs, or on the opposite side of closed doors may not reach the detector to alarm it.

Accessories

All detector mounting bases have wiring terminals that are accessible from the "room-side" after mounting the base to the electrical box. The bases mount to North American 1-gang boxes and to 3½ inch or 4 inch octagon boxes, 1½ inches (38 mm) deep. They also mount to European BESA and 1-gang boxes with 60.3 mm fixing centers. The SIGA-SB4, SIGA-RB4, and SIGA-IB4 mount to North American 4 inch sq. electrical boxes in addition to the above boxes. They include the SIGA-TS4 Trim Skirt which is used to cover the "mounting ears" on the base. The SIGA-AB4G mounts to a 4" sqare box only.

SIGA-AB4G
Audible Base

SIGA-SB
Standard Base

SIGA-IB
Isolator Base

SIGA-RB
Relay Base

SIGA-LED
Remote LED

Standard Base SIGA-SB, SIGA-SB4 - This is the basic mounting base for GE Security Signature Series detectors. The SIGA-LED Remote LED is supported by the Standard Base.

Relay Base SIGA-RB, SIGA-RB4 - This base includes a relay. Normally open or closed operation is selected during installation. The dry contact is rated for 1 amp (pilot duty) @ 30 Vdc. The relay's position is supervised to avoid accidentally jarring it out of position. The SIGA-RB can be operated as a control relay if programmed to do so at the control panel (EST3 V.2 only). The relay base does not support the SIGA-LED Remote LED.

Audible Base SIGA-AB4G - This base is designed for use where localized or group alarm signaling is required. When the detector senses an alarm condition, the audible base emits a local alarm signal. The optional SIGA-CRR Polarity Reversal Relay can be used for sounding to other audible bases on the same 24 Vdc circuit.

Relay and Audible Bases operate as follows:

- at system power-up or reset, the relay is de-energized
- when a detector is installed in the base with the power on, the relay energizes for four seconds, then de-energizes
- when a detector is removed from a base with the power on, the relay is de-energized
- when the detector enters the alarm state, the relay is energized.

Isolator Base SIGA-IB, SIGA-IB4 - This base includes a built-in line fault isolator for use on Class A circuits. A detector must be installed for it to operate. The isolator base does not support the SIGA-LED Remote LED.

The isolator operates as follows:

- a short on the line causes all isolators to open within 23 msec
- at 10 msec intervals, beginning on one side of the Class A circuit nearest the loop controller, the isolators close to provide the next isolator down the line with power
- when the isolator next to the short closes, reopens within 10 msec.

The process repeats beginning on the other side of the loop controller.

Remote LED SIGA-LED - The remote LED connects to the SIGA-SB or SIGA-SB4 Standard Base only. It features a North American size 1-gang plastic faceplate with a white finish and red alarm LED.

SIGA-TS4 Trim Skirt - Supplied with 4 inch bases, it can also be ordered separately to use with the other bases to help hide surface imperfections not covered by the smaller bases.

Permit: 2017-1345213-LT
RSN: 1231966
Page 12 of 20

Application

Although photoelectric detectors have a wide range of fire sensing capabilities they are best suited for detecting slow, smoldering fires. The table below shows six standard test fires used to rate the sensitivity of smoke and heat detectors. The table indicates that no single sensing element is suited for all test fires.

GE Security recommends that this detector be installed according to latest recognized edition of national and local fire alarm codes.

Test Fire	SIGA-IS Ion	SIGA-PS Photo	SIGA-HRS and SIGA-HFS Rate-of-Rise/ Fixed Temp.	SIGA-PHS Photo Heat 3D	SIGA-IPHS Ion/Photo/Heat 4D
Open Wood	**optimum**	unsuitable	**optimum**	very suitable	**optimum**
Wood Pyrolysis	suitable	**optimum**	unsuitable	**optimum**	**optimum**
Smouldering Cotton	very suitable	**optimum**	unsuitable	**optimum**	**optimum**
Poly Urethane Foam	very suitable	very suitable	suitable	very suitable	**optimum**
n-Heptane	**optimum**	very suitable	very suitable	**optimum**	**optimum**
Liquid Fire without Smoke	unsuitable	unsuitable	**optimum**	very suitable	very suitable

Typical Wiring

The detector mounting bases accept #18 AWG (0.75mm²), #16 (1.0mm²), #14 AWG (1.5mm²), and #12 AWG (2.5mm²) wire sizes.

Note: Sizes #16 AWG (1.0mm²) and #18 AWG (0.75mm²) are preferred for ease of installation. See Signature Loop Controller catalog sheet for detailed wiring requirement specifications.

Standard Detector Base, SIGA-SB, SIGA-SB4

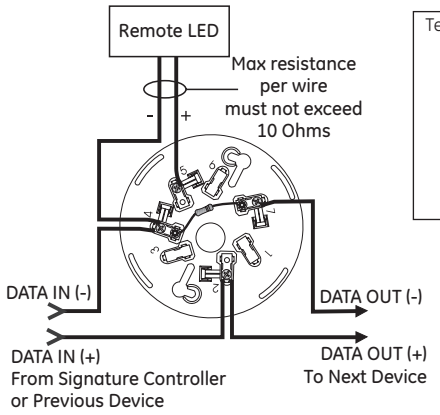

Term	Description
1	Not Used
2	DATA IN/OUT (+)
3	Not Used
4	DATA IN (-)
5	Remote LED (-)
6	Remote LED (+)
7	Not Used
8	DATA OUT (-)

Relay Detector Base, SIGA-RB, SIGA-RB4

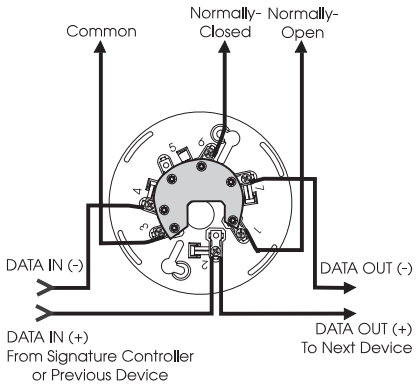

Term	Description
1	Normally Open
2	DATA IN/OUT (+)
3	Common
4	DATA IN (-)
5	Not Used
6	Normally-Closed
7	DATA OUT (-)

CONTACT RATING
1.0 Amp @ 30 VDC
(Pilot Duty)

Isolator Detector Base, SIGA-IB, SIGA-IB4

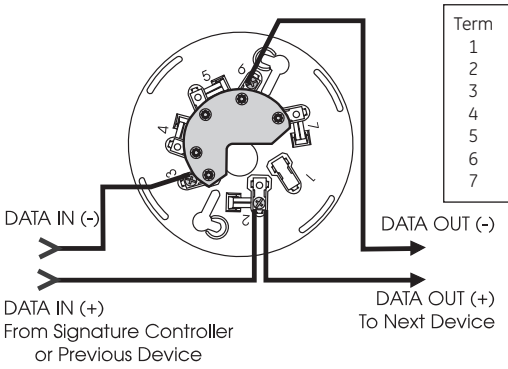

Term	Description
1	Not Used
2	DATA IN/OUT (+)
3	DATA IN (-)
4	Not Used
5	Not Used
6	DATA OUT (-)
7	Not Used

Audible Detector Base, SIGA-AB4G

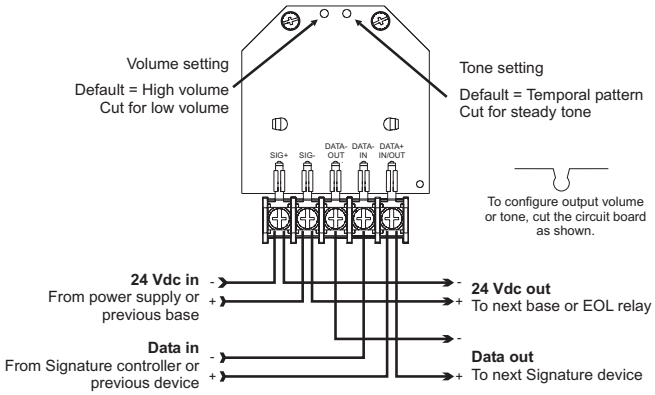

Permit: 2017-1345213-LT
RSN: 1231966
Page 13 of 20

GE
Security

U.S.
T 888-378-2329
F 866-503-3996

Canada
T 519 376 2430
F 519 376 7258

Asia
T 852 2907 8108
F 852 2142 5063

Australia
T 61 3 9259 4700
F 61 3 9259 4799

Europe
T 32 2 725 11 20
F 32 2 721 86 13

Latin America
T 305 593 4301
F 305 593 4300

www.gesecurity.com/est

© 2006 General Electric Company
All Rights Reserved

Signature Series is a Trademark of GE Security.

Specifications

Sensing Element	Photoelectric - Light Scattering Principle
Storage & Operating Environment	Air Velocity Range: 0 to 5,000 ft/min (0 to 25.39 m/s); Humidity: 0 to 93% RH, Non-Condensing Operating Temp: 32°F to 120°F (0°C to 49°C); Storage Temp: -4°F to 140°F (-20°Cto 60°C)
Sensitivity Range	ULI/ULC - 0.67% to 3.77% obscuration/foot
User Selected Alarm Sensitivity Settings	Most Sensitive: 1.0%/ft.; More Sensitive: 2.0%/ft.; Normal: 2.5%/ft.; Less Sensitive: 3.0%/ft.; Least Sensitive: 3.5%/ft.
Pre-alarm Sensitivity	5% increments, allowing up to 20 pre-alarm settings
Operating Voltage	15.2 to 19.95 Vdc (19 Vdc nominal)
Operating Current	Quiescent: 45µA @ 19 V; Alarm: 45µA @ 19 V Emergency Stand-alone Alarm Mode: 18mA Pulse Current: 100 µA (100 msec); During Communication: 9 mA max.
Construction & Finish	High Impact Engineering Polymer - White
Compatible Mounting Bases	SIGA-SB Standard Base, SIGA-RB Relay Base, SIGA-IB Isolator Base, SIGA-AB4, SIGA-AB4G Audible Bases
LED Operation	On-board Green LED - Flashes when polled; On-board Red LED - Flashes when in alarm Both LEDs - Glow steady when in alarm (stand-alone) Compatible Remote Red LED (model SIGA-LED) Flashes when in alarm
Compatibility	Use With: SIGNATURE Loop Controller
Address Requirements	Uses one Device Address
Agency Listings	UL, ULC, MEA, CSFM
UL Listed Spacing	30 ft

Ordering Information

Catalog Number	Description	Ship Wt. lbs (kg)
SIGA-PS	Intelligent Photoelectric Detector - UL/ULC Listed	0.5 (.23)

Accessories		
SIGA-SB	Detector Mounting Base - Standard	0.2 (.09)
SIGA-SB4	4-inch Detector Mounting Base c/w SIGA-TS4 Trim Skirt	
SIGA-RB	Detector Mounting Base w/Relay	
SIGA-RB4	4-inch Detector Mounting Base w/Relay, c/w SIGA-TS4 Trim Skirt	
SIGA-IB	Detector Mounting Base w/Fault Isolator	
SIGA-IB4	4-inch Detector Mounting Base w/ Fault Isolator, c/w SIGA-TS4 Trim Skirt	
SIGA-LED	Remote Alarm LED	
SIGA-AB4G	Audible (Sounder) Base	.3 (0.15)
SIGA-TS4	Trim Skirt (supplied with 4-inch bases)	.1 (.04)

imagination at work

Permit: 2017-1345213-LT
RSN: 1231966
Page 14 of 20

Overview

The Control Relay Module and the Polarity Reversal Relay Module are part of the Signature Series system. They are intelligent analog addressable devices available in either plug-in (UIO) versions, or standard 1-gang mount versions.

The SIGA-CR/MCR Control Relay Module provides a Form "C" dry relay contact to control external appliances such as door closers, fans, dampers etc. This device does not provide supervision of the state of the relay contact. Instead, the on-board microprocessor ensures that the relay is in the proper ON/OFF state. Upon command from the loop controller, the SIGA-CR/MCR relay activates the normally open or normally-closed contact.

The SIGA-CRR/MCRR Polarity Reversal Relay Module provides a Form "C" dry relay contact to power and activate a series of SIGA-AB4G Audible Sounder Bases. Upon command from the Signature loop controller, the SIGA-CRR reverses the polarity of its 24 Vdc output, thus activating all Sounder Bases on the data loop.

Standard-mount versions (SIGA-CR and SIGA-CRR) are installed to standard North American 1-gang electrical boxes, making them ideal for locations where only one module is required. Separate I/O and data loop connections are made to each module.

Plug-in UIO versions (SIGA-MCR and SIGA-MCRR) are part of the UIO family of plug-in Signature Series modules. They function identically to the standard mount versions, but take advantage of the modular flexibility and easy installation that characterizes all UIO modules. Two- and six-module UIO motherboards are available. All wiring connections are made to terminal blocks on the motherboard. UIO assemblies may be mounted in GE Security enclosures.

Standard Features

- **Provides one no/nc contact (SIGA-CR/MCR)**
  Form "C" dry relay contact can be used to control external appliances such as door closers, fans, dampers etc.
- **Allows group operation of sounder bases**
  The SIGA-CRR/MCRR reverses the polarity of its 24 Vdc output, thus activating all Sounder Bases on the data loop.
- **Plug-in (UIO) or standard 1-gang mount**
  UIO versions allow quick installation where multiple modules are required. The 1-gang mount version is ideal for remote locations that require a single module.
- **Automatic device mapping**
  Signature modules transmit information to the loop controller regarding their circuit locations with respect to other Signature devices on the wire loop.
- **Electronic addressing**
  Programmable addresses are downloaded from the loop controller, a PC, or the SIGA-PRO Signature Program/Service Tool; there are no switches or dials to set.
- **Intelligent device with microprocessor**
  All decisions are made at the module to allow lower communication speed with substantially improved control panel response time and less sensitivity to line noise and loop wiring properties; twisted or shielded wire is not required.
- **Ground fault detection by address**
  Detects ground faults right down to the device level.

Control Relay Modules

SIGA-CR, SIGA-MCR, SIGA-CRR, SIGA-MCRR

SIGA-MCR

SIGA-CR

MEA

Permit: 2017-1345213-LT
RSN: 1231966
Page 15 of 20

Installation

SIGA-CR and SIGA-CRR: modules mount to North American 2½ inch (64 mm) deep 1-gang boxes and 1½ inch (38 mm) deep 4 inch square boxes with 1-gang covers and SIGA-MP mounting plates. The terminals are suited for #12 to #18 AWG (2.5 mm^2 to 0.75 mm^2) wire size.

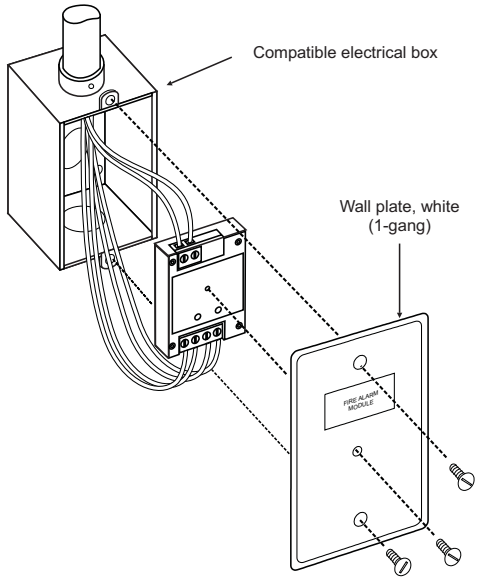

SIGA-MCR and SIGA-MCRR: mount the UIO motherboard inside a suitable GE Security enclosure with screws and washers provided. Plug the module into any available position on the motherboard and secure the module to the motherboard with the captive screws. Wiring connections are made to the terminals on the motherboard (see wiring diagram). UIO motherboard terminals are suited for #12 to #18 AWG (2.5 mm^2 to 0.75 mm^2) wire size.

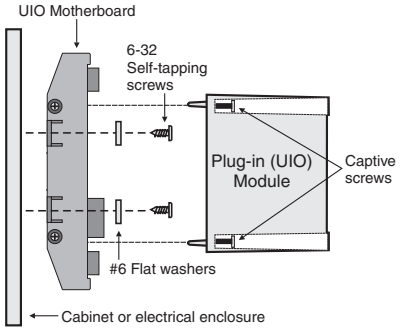

Electronic Addressing - The loop controller electronically addresses each module, saving valuable time during system commissioning. Setting complicated switches or dials is not required. Each module has its own unique serial number stored in its on-board memory. The loop controller identifies each device on the loop and assigns a "soft" address to each serial number. If desired, the modules can be addressed using the SIGA-PRO Signature Program/Service Tool.

GE Security recommends that this module be installed according to latest recognized edition of national and local fire alarm codes.

Application

The operation of Signature Series control relays is determined by their sub-type code or "Personality Code."

Personality Code 8: CONTROL RELAY (SIGA-CR/MCR) - Dry Contact Output. This setting configures the module to provide one Form "C" DRY RELAY CONTACT to control Door Closers, Fans, Dampers, etc. Contact rating is 2.0 amp @ 24 Vdc; 0.5 amp @ 120 Vac (or 220 Vac for non-UL applications). Personality Code 8 is assigned at the factory. No user configuration is required.

Personality Code 8: POLARITY REVERSAL RELAY MODULE (SIGA-CRR/MCRR). This setting configures the module to reverse the polarity of its 24 Vdc output. Contact rating is 2.0 amp @ 24 Vdc (pilot duty). Personality Code 8 is assigned at the factory. No user configuration is required.

Compatibility

The Signature Series modules are compatible only with GE Security's Signature Loop Controller.

Warnings & Cautions

This module will not operate without electrical power. As fires frequently cause power interruption, we suggest you discuss further safeguards with your local fire protection specialist.

Testing & Maintenance

The module's automatic self-diagnosis identifies when it is defective and causes a trouble message. The user-friendly maintenance program shows the current state of each module and other pertinent messages. Single modules may be turned off (deactivated) temporarily, from the control panel. Availability of maintenance features is dependent on the fire alarm system used. Scheduled maintenance (Regular or Selected) for proper system operation should be planned to meet the requirements of the Authority Having Jurisdiction (AHJ). Refer to current NFPA 72 and ULC CAN/ULC 536 standards.

Permit: 2017-1345213-LT
RSN: 1231966
Page 16 of 20

Typical Wiring

Modules will accept #18 AWG (0.75mm²), #16 (1.0mm²), #14 AWG (1.50mm²) and #12 AWG (2.5mm²) wire sizes.

Note: Sizes #16 AWG (1.0mm²) and #18 AWG (0.75mm²) are preferred for ease of installation. See Signature Loop Controller catalog sheet for detailed wiring requirement specifications.

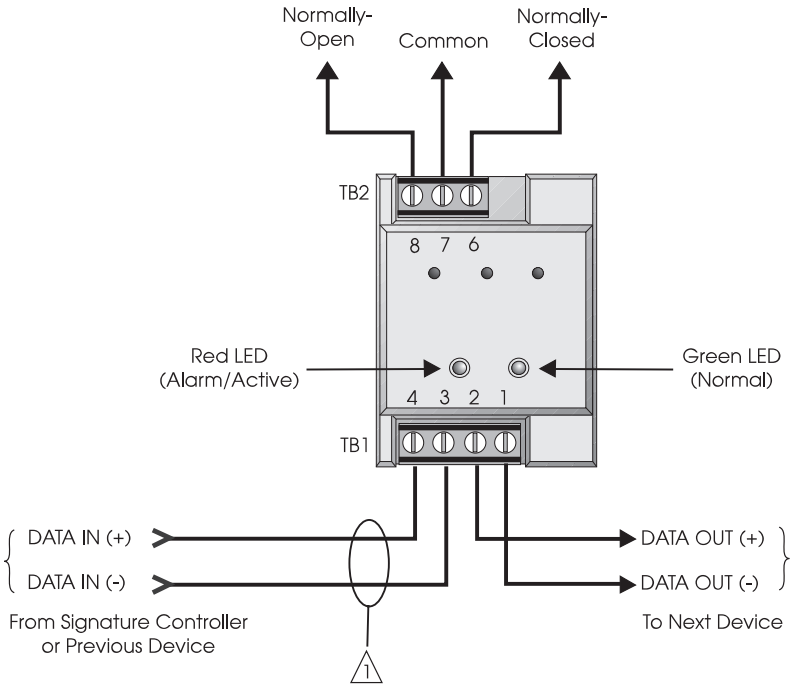

SIGA-CR Control Relay

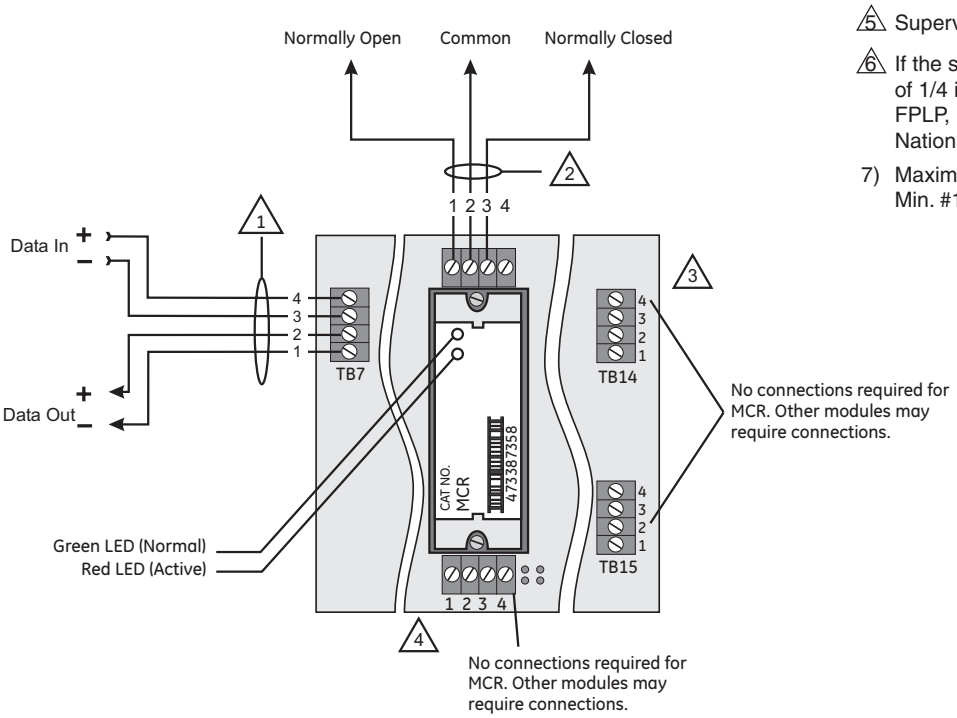

SIGA-MCR Control Relay

Notes

1. Refer to Signature Loop Controller Installation Sheet for wiring specifications.
2. NFPA 72 requires that the SIGA-CR/SIGA-MCR be installed in the same room as the device it is controlling. This requirement may not apply in all markets. Check with your local AHJ for details.
3. The SIGA-UIO6R and the SIGA-UIO2R do not come with TB14.
4. The SIGA-UIO6 does not come with TB8 through TB13.
5. Supervised and power-limited.
6. If the source is nonpower-limited, maintain a space of 1/4 inch from power-limited wiring or use FPL, FPLP, FPLR, or an equivalent in accordance with the National Electrical Code.

7) Maximum #12 AWG (2.5mm²) wire.
Min. #18 (0.75mm²).

Permit: 2017-1345213-LT
RSN: 1231966
Page 17 of 20

Typical Wiring

Modules will accept #18 AWG (0.75mm²), #16 (1.0mm²), #14 AWG (1.50mm²) and #12 AWG (2.50mm²) wire sizes.

Note: Sizes #16 AWG (1.0mm²) and #18 AWG (0.75mm²) are preferred for ease of installation. See Signature Loop Controller catalog sheet for detailed wiring requirement specifications.

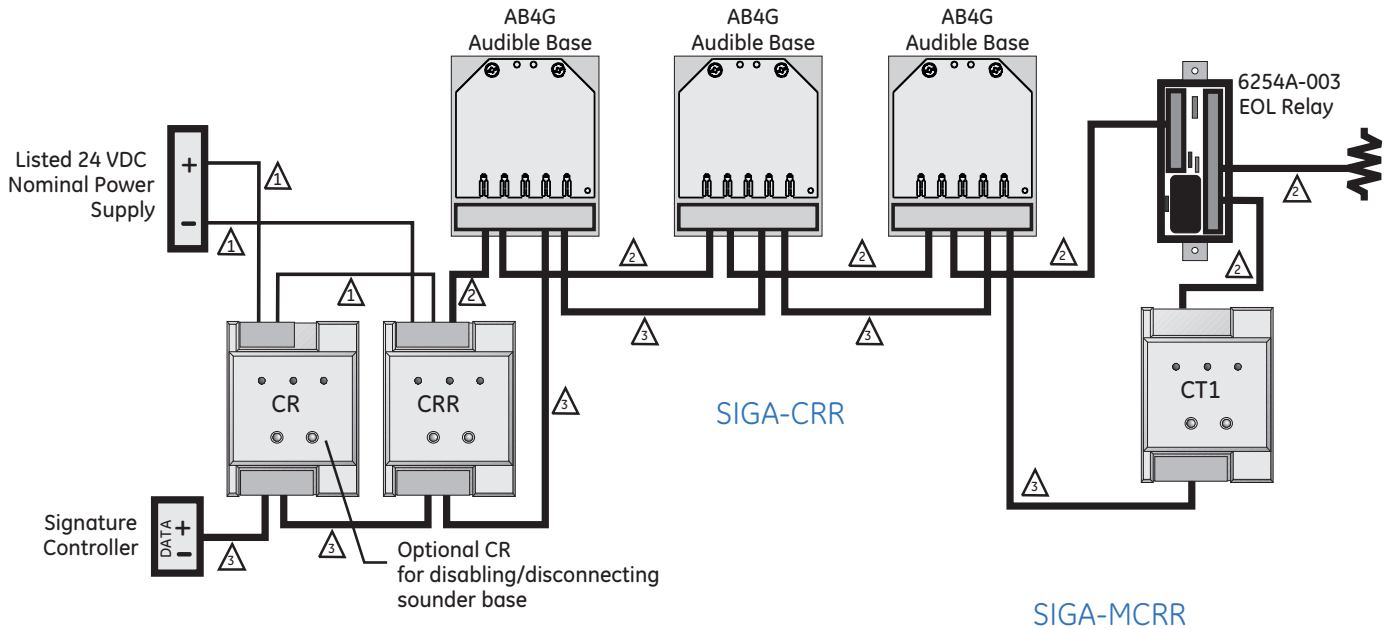

SIGA-MCRR

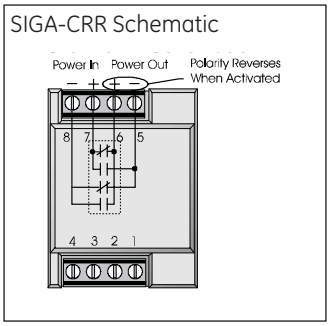

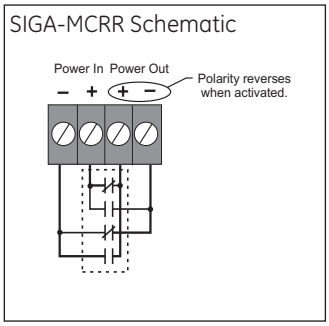

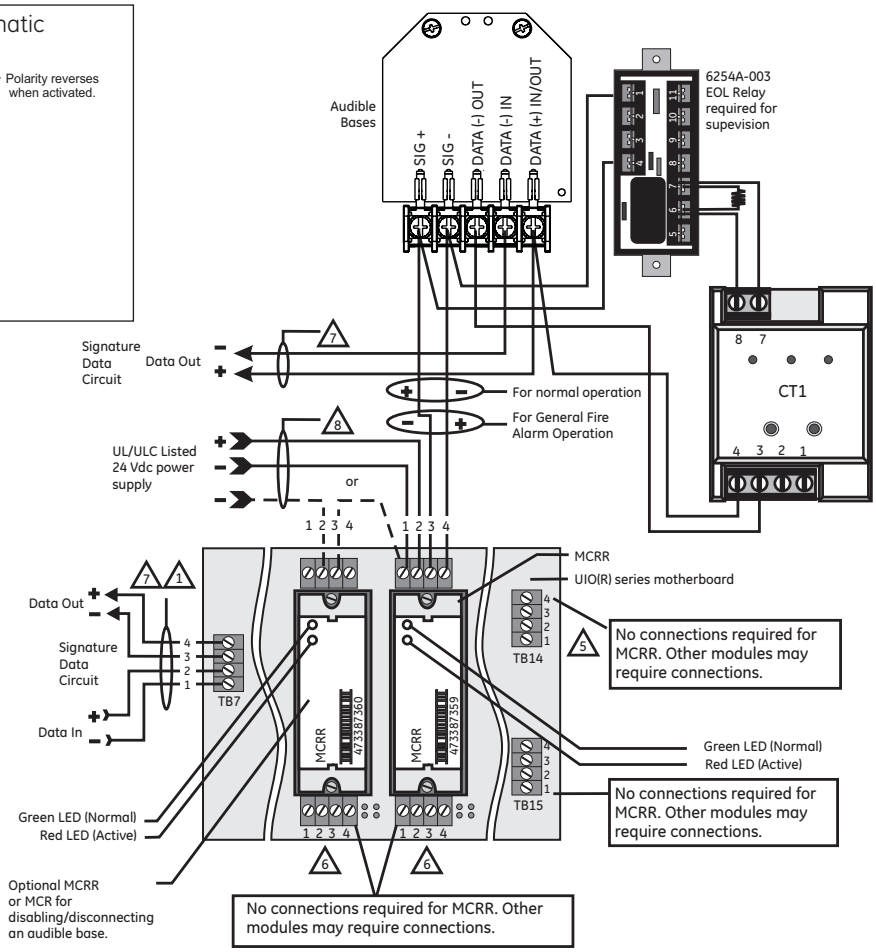

Notes

1. Refer to the Signature controller installation sheet for wiring.
2. One Pair of Wires (24 Vdc power).
3. One Pair of Wires (Signature Data).
4. Single Wire (24 Vdc power).
5. The SIGA-UIO6R and the SIGA-UIO2R do not come with TB14.
6. The SIGA-UIO6 does not come with TB8 through TB13.
7. Supervised and power-limited.
8. If the source is nonpower-limited, maintain a space of 1/4 inch from power-limited wiring or use FPL, FPLP, FPLR, or an equivalent in accordance with the National Electrical Code.
9. Maximum #12 AWG (2.5 mm²) wire; Minimum #18 AWG (0.75 mm²).
10. End-of-Line Relay must monitor and report power supply trouble to control panel.
11. Class B Data wiring may be "T-tapped."

Permit: 2017-1345213-LT
RSN: 1231966
Page 18 of 20

Specifications

Catalog Number	SIGA-CR	SIGA-MCR	SIGA-CRR	SIGA-MCRR
Description	Control Relay		Polarity Reversal Relay	
Type Code	Personality Code 8 (Factory Set)		Personality Code 8 (Factory Set)	
Address Requirements	Uses 1 Module Address			
Operating Current	Standby = 100µA Activated = 100µA			
Operating Voltage	15.2 to 19.95 Vdc (19 Vdc nominal)			
Relay Type and Rating	Form "C" 24 VDC = 2 amps (pilot duty) 120 Vac = 0.5 amps 220 Vac (non-UL) = 0.5 amps			
Mounting	North American 2½ inch (64 mm) deep 1-gang boxes and 1½ inch (38 mm) deep 4 inch square boxes with 1-gang covers and SIGA-MP mounting plates	Plugs into UIO2R, UIO6R or UIO6 Motherboards	North American 2½ inch (64 mm) deep 1-gang boxes and 1½ inch (38 mm) deep 4 inch square boxes with 1-gang covers and SIGA-MP mounting plates	Plugs into UIO2R, UIO6R or UIO6 Motherboards
Construction & Finish	High Impact Engineering Polymer			
Storage and Operating Environment	Operating Temperature: 32°F to 120°F (0°C to 49°C) Storage Temperature: -4°F to 140°F (-20°C to 60°C) Humidity: 0 to 93% RH			
LED Operation	On-board Green LED - Flashes when polled On-board Red LED - Flashes when in alarm/active			
Compatibility	Use With: Signature Loop Controller			
Agency Listings	UL, ULC, CSFM, MEA			

Ordering Information

Catalog Number	Description	Ship Weight - lbs (kg)
SIGA-CR	Control Relay Module (Standard Mount)	0.4 (0.15)
SIGA-MCR	Control Relay Module (UIO Mount)	0.18 (0.08)
SIGA-CRR	Polarity Reversal Relay Module (Standard Mount)	0.4 (0.15)
SIGA-MCRR	Polarity Reversal Relay Module (UIO Mount)	0.18 (0.08)

Related Equipment		
27193-11	Surface Mount Box - Red, 1-gang	1 (0.6)
27193-16	Surface Mount Box - White, 1-gang	1 (0.6)
SIGA-UIO2R	Universal Input-Output Module Board w/Riser Inputs - Two Module Positions	0.32 (0.15)
SIGA-UIO6R	Universal Input-Output Module Board w/Riser Inputs - Six Module Positions	0.62 (0.28)
SIGA-UIO6	Universal Input-Output Module Board - Six Module Positions	0.56 (0.25)
SIGA-AB4G	Audible (Sounder) Detector Base	0.3 (0.15)

Accessories		
MFC-A	Multifunction Fire Cabinet - Red, supports Signature Module Mounting Plates	7.0 (3.1)
SIGA-MB4	Transponder Mounting Bracket (allows for mounting two 1-gang modules in a 2-gang box)	0.4 (0.15)
SIGA-MP1	Signature Module Mounting Plate, 1 footprint	1.5 (0.70)
SIGA-MP2	Signature Module Mounting Plate, 1/2 footprint	0.5 (0.23)
SIGA-MP2L	Signature Module Mounting Plate, 1/2 extended footprint	1.02 (0.46)

Permit: 2017-1345213-LT
RSN: 1231966
Page 19 of 20

GE
Security

U.S.
T 888-378-2329
F 866-503-3996

Canada
T 519 376 2430
F 519 376 7258

Asia
T 852 2907 8108
F 852 2142 5063

Australia
T 61 3 9259 4700
F 61 3 9259 4799

Europe
T 32 2 725 11 20
F 32 2 721 86 13

Latin America
T 305 593 4301
F 305 593 4300

www.gesecurity.com/est

© 2006 General Electric Company
All Rights Reserved

Signature Series is a Trademark of GE Security.

Signature Series Overview

The Signature Series intelligent analog-addressable system from GE Security is an entire family of multi-sensor detectors and mounting bases, multiple-function input and output modules, network and non-network control panels, and user-friendly maintenance and service tools. Analog information from equipment connected to Signature devices is gathered and converted into digital signals. An onboard microprocessor in each Signature device measures and analyzes the signal and decides whether or not to input an alarm. The microprocessor in each Signature device provides four additional benefits – Self-diagnostics and History Log, Automatic Device Mapping, Stand-alone Operation and Fast, Stable Communication.

Self-diagnostics and History Log – Each Signature Series device constantly runs self-checks to provide important maintenance information. The results of the self-check are automatically updated and permanently stored in its non-volatile memory. This information is accessible for review any time at the control panel, PC, or using the SIGA-PRO Signature Program/Service Tool. The information stored in device memory includes:

- Device serial number, address, and type
- Time and date of last alarm
- Most recent trouble code logged by the detector — 32 possible trouble codes may be used to diagnose faults.

Automatic Device Mapping –The Signature Data Controller (SDC) learns where each device's serial number address is installed relative to other devices on the circuit. The SDC keeps a map of all Signature Series devices connected to it. The Signature Series Data Entry Program also uses the mapping feature. With interactive menus and graphic support, the wired circuits between each device can be examined. Layout or "as-built" drawing information showing branch wiring (T-taps), device types and their address are stored on disk for printing hard copy. This takes the mystery out of the installation. The preparation of as-built drawings is fast and efficient.

Device mapping allows the Signature Data Controller to discover:

- Unexpected additional device addresses
- Missing device addresses
- Changes to the wiring in the circuit.

Most Signature modules use a personality code selected by the installer to determine their actual function. Personality codes are downloaded from the SDC during system configuration and are indicated during device mapping.

Standalone Operation – A decentralized alarm decision by the device is guaranteed. Onboard intelligence permits the device to operate in standalone (degrade) mode. If Signature loop controller CPU communications fail for more than four seconds, all devices on that circuit go into standalone mode. The circuit acts like a conventional alarm receiving circuit. Each Signature device on the circuit continues to collect and analyze information from its slave devices. When connected to a panel utilizing standalone operation, modules with their "personality" set as alarm devices (IDC) will alarm should their slave alarm-initiating device activate.

imagination at work

Permit: 2017-1345213-LT
RSN: 1231966
Page 20 of 20