CAUTION: IF THIS SHEET IS NOT 30"x42" IT IS A REDUCED PRINT

SPECULATI□E SUITE

1411 S.POTOMAC ST, SUITE 440
AURORA, CO 80012

□□r Ten□n□□ □r□□e□en□Per□ □□On□□□

ABBRE□IATIONS

&	And
∠	Angle
@	At
℄	Centerline
~	Diameter or Round
#	Pound or Number
(E)	Existing
ACOUS.	Acoustical
ACT.	Acoustical Tile
AD.	Area Drain
ADJ.	Adjustable
AFF.	Above Finish Floor
AGGR.	Aggregate
AL.	Aluminum
APPROX.	Approximate
ARCH.	Architectural
ASB.	Asbestos
ASPH.	Asphalt
BD.	Board
BITUM.	Bituminous
BLDG.	Building
BLK.	Block
BLKG.	Blocking
BM.	Beam
B.O.C.	Bottom of Concrete
B.O.M.	Bottom of Mullion
B.O.P.	Bottom of Panel
B.O.R.	Bottom of Reveal
BOT.	Bottom
B/S.	Building Standard
CAB.	Cabinet
C.B.	Catch Basin
CEM.	Cement
CER.	Ceramic
CFCI.	CONT. Furnished/CONT. Installed
CFOI.	CONT. Furnished/Oner Installed
C.I.	Cast Iron
C.G.	Corner Guard
CLG.	Ceiling
CLKG.	Caulking
CLO.	Closet
CLR.	Clear
C.O.	Cased Opening
COL.	Column
C.O.M.	Center of Mullion
CONC.	Concrete
CONN.	Connection
CONST.	Construction
CONT.	Continuous
CONTR.	Contractor
C.O.R.	Center of Reveal
CORR.	Corridor
CPT.	Carpet
CTSK.	Countersunk
CNTR.	Counter
CTR.	Center
C.W.	Cold Water
D.	Deep
DBL.	Double
DEPT.	Department
D.F.	Drinking Fountain
DET.	Detail
DIA.	Diameter
DIAG.	Diagonal
DIFF.	Diffuser
DIM.	Dimension
DISP.	Dispenser
DN.	Down
D.O.	Door Opening
DR.	Door
DWR.	Drawer
DS.	Downspout
D.S.P.	Dry Standpipe
DWG	Drawing
E.	East
EA.	Each
E.J.	Expansion Joint
EL.	Elevation
ELEC.	Electrical
ELEV.	Elevator
EMER.	Emergency
ENCL.	Enclosure
E.P.	Electrical Panelboard
EQ.	Equal
EQPT.	Equipment
E.W.C.	Electric Water Cooler
EXST.	Existing
EXPO.	Exposed
EXP.	Expansion
EXT.	Exterior
F.A.	Fire Alarm
F.B.	Flat Bar
F.D.	Floor Drain
FDN.	Foundation
F.E.	Fire Extinguisher
F.E.C.	Fire Extinguisher Cab
F.H.C.	Fire Hose Cabinet
FIN.	Finish
FL.	Floor
FLASH.	Flashing
FLUOR.	Fluorescent
F.O.C.	Face of Concrete
F.O.F.	Face of Finish
F.O.M.	Face of Mullion
F.O.S.	Face of Stud
FPRF.	Fireproof
F.S.	Full Size
FT.	Foot or Feet
FTG.	Footing
FURR.	Furring
FUT.	Future
GA.	Gauge
GALV.	Galvanized
G.B.	Grab Bar
GL.	Glass
GND.	Ground
GR.	Grade
GYP.	Gypsum
H.B.	Hose Bibb
H.C.	Hollow Core
HDWD.	Hardwood
HDWE.	Hardware
H.M.	Hollow Metal
HORIZ.	Horizontal
HR.	Hour
HGT.	Height
I.D.	Inside Diameter (Dim.)
INSUL.	Insulation
INT.	Interior
Jan.	Janitor
JT.	Joint
KIT.	Kitchen
K.O.	Knock Out
LAB.	Laboratory
LAM.	Laminate
LAV.	Lavatory
LKR.	Locker
LT.	Light
MAX.	Maximum
M.C.	Medicine
MECH.	Mechanical
MEMB.	Membrane
MET.	Metal
MFR.	Manufacturer
MH.	Manhole
MIN.	Minimum
MIR.	Mirror
MISC.	Miscellaneous
M.O.	Masonry Opening
MTD.	Mounted
MUL.	Mullion
N.	North
N.I.C.	Not In Contract
NO.	Number
NOM.	Nominal
N.T.S.	Not To Scale
O.A.	Overall
OBS.	Obscure
O.C.	On Center
O.D.	Outside Diameter (Dim.)
OFCI.	Owner Furnished/CONT. Installed
OFOI.	Owner Furnished/Owner Installed
OFF.	Office
OPNG.	Opening
OPP.	Opposite
PRCST.	Pre-cast
PL.	Plate
P.LAM.	Plastic Laminate
PLAS.	Plaster
PLYWD.	Plywood
PR.	Pair
PT.	Point
P.T.D	Paper Towel Dispenser
P.T.D/R	Combination Paper Towel
PTN.	Partition
P.T.R.	Paper Towel Receptacle
P.J.	Panel Joint
Q.T.	Quarry Tile
R.	Riser
RAD.	Radius
R.D.	Roof Drain
REF.	Reference
REFR.	Refrigerator
RGTR.	Register
REINF.	Reinforced
REQ.	Required
RESIL.	Resilient
RM.	Room
R.O.	Rough Opening
RWD.	Redwood
R.W.L.	Rain Water Leader
S.	South
S.C.	Solid Core
S.C.D.	Seat Cover Dispenser
SCHED.	Schedule
S.D.	Soap Dispenser
SECT.	Section
SH.	Shelf
SHR.	Shower
SHT.	Sheet
SIM.	Similar
S.N.D.	Sanitary Napkin Disp.
S.N.R.	Sanitary Napkin Recept.
SPEC.	Specification
SQ.	Square
S.ST.	Stainless Steel
S.SK.	Service Sink
STA.	Station
STD.	Standard
STL.	Steel
STOR.	Storage
STRL.	Structural
SUSP.	Suspended
SYS.	Symmetrical
TRD.	Tread
T.B.	Towel Bar
T.C.	Top of Curb
TEL.	Telephone
TER.	Terrazzo
T. & G.	Tongue and Groove
THK.	Thick
T.O.C.	Top of Concrete
T.O.P.	Top of Panel
T.O.R.	Top of Reveal
T.O.RC.	Top of Deep Recess
T.O.M.	Top of Mullion
T.O.W.	Top of Wall
T.P.	Top of Pavement
T.P.D.	Toilet Paper Dispenser
T.V.	Television
T.W.	Top of Wall
TYP.	Typical
UNF.	Unfinished
U.O.N.	Unless Otherwise Noted
UR.	Urinal
VERT.	Vertical
VEST.	Vestibule
W.	West
W/	With
W.C.	Water Closet
WD.	Wood
W/O	Without
WP	Waterproof
WSCT.	Wainscot
WT.	Weight

GENERAL PROJECT NOTES

GENERAL NOTES:

1. THIS PROJECT AND ALL WORK ASSOCIATED WITH PROJECT SHALL CONFORM TO STATE AND LOCAL CODES AND ORDINANCES HAVING JURISDICTION OVER THIS PROJECT.
2. THE TERM "ARCHITECT" OR "DESIGNER" AS USED IN THESE DOCUMENTS REFERS TO WARE MALCOMB.
3. THE ARCHITECT SHALL NOT HAVE CONTROL OR CHARGE OF AND SHALL NOT BE RESPONSIBLE FOR CONSTRUCTION MEANS, METHODS, TECHNIQUES, SEQUENCE OF PROCEDURE, OR FOR SAFETY PRECAUTIONS AND PROGRAMS IN CONNECTION WITH THE WORK, ALL OF WHICH SHALL BE THE SOLE RESPONSIBILITY OF THE CONTRACTOR.
4. THE DESIGN ADEQUACY, AND SAFETY OF ERECTION BRACING, SHORING, TEMPORARY SUPPORTS, ETC. DURING DEMOLITION AND/OR CONSTRUCTION IS THE SOLE RESPONSIBILITY OF THE CONTRACTOR, AND HAS NOT BEEN CONSIDERED BY THE STRUCTURAL ENGINEER OR ARCHITECT.
5. THE ARCHITECT ASSUMES NO RESPONSIBILITY FOR THE COMPLETENESS OF PLANS FOR BID PURPOSES PRIOR TO THE ISSUANCE OF THE BUILDING PERMIT.
6. ALL WORK NOTED "N.I.C." OR "NOT IN CONTRACT" IS TO BE ACCOMPLISHED BY A CONTRACTOR OTHER THAN THE GENERAL CONTRACTOR AND IS NOT TO BE PART OF THE CONSTRUCTION AGREEMENT. THE GENERAL CONTRACTOR SHALL COORDINATE WITH "OTHER" CONTRACTORS PER REQUIREMENTS ESTABLISHED BY OWNER AND TENANT.
7. THE GENERAL CONTRACTOR AND ALL SUBCONTRACTORS ARE RESPONSIBLE FOR EXAMINING CONTRACT DOCUMENTS, FIELD CONDITIONS, AND CONFIRMING THAT WORK IS BUILDABLE AS SHOWN BEFORE PROCEEDING WITH CONSTRUCTION. IF THERE ARE ANY QUESTIONS REGARDING THESE OR OTHER COORDINATION ITEMS, THE CONTRACTOR IS RESPONSIBLE FOR OBTAINING CLARIFICATION FROM THE ARCHITECT BEFORE PROCEEDING WITH WORK IN QUESTION OR RELATED WORK.
8. CONTRACTOR SHALL MAINTAIN RECORD DOCUMENTS OF CONSTRUCTION CHANGES ("AS-BUILT DRAWINGS") AND SHALL PROVIDE SAID DOCUMENTATION TO THE ARCHITECT UPON COMPLETION OF CONSTRUCTION – NO EXCEPTION ALLOWED.
9. THE GENERAL CONTRACTOR IS SOLELY RESPONSIBLE TO COORDINATE WITH ALL SUBCONTRACTORS PER REQUIREMENTS ESTABLISHED BY OWNER, TENANT, OR BOTH, WHICH ARE UNDER SEPARATE CONTRACT WITH THE OWNER, OR TENANT, OR BOTH.
10. THE STRUCTURAL, MECHANICAL, ELECTRICAL, PLUMBING, OTHER DRAWINGS, AND JOB SPECIFICATIONS ARE SUPPLEMENTARY TO ARCHITECTURAL CONSTRUCTION DRAWINGS. ANY DISCREPANCY BETWEEN THESE DOCUMENTS SHALL BE IMMEDIATELY BROUGHT TO THE ATTENTION OF THE ARCHITECT FOR CLARIFICATION.
11. THE INTENT OF DRAWINGS AND SPECIFICATIONS IS TO INCLUDE ALL LABOR, MATERIALS AND SERVICES NECESSARY FOR THE COMPLETION OF ALL WORK SHOWN, DESCRIBED, OR REASONABLY IMPLIED, BUT NOT LIMITED TO THAT EXPLICITLY INDICATED IN THE CONTRACT DOCUMENTS.
12. INSTALL ALL MANUFACTURED ITEMS, MATERIALS, AND EQUIPMENT IN STRICT ACCORDANCE WITH THE MANUFACTURER'S SPECIFICATIONS, U.O.N.
13. ANY WORK INSTALLED IN CONFLICT WITH THE CONSTRUCTION DRAWINGS, WITHOUT THE PRIOR APPROVAL OF THE OWNER AND THE ARCHITECT SHALL BE CORRECTED AT THE CONTRACTOR'S EXPENSE.
14. THE GENERAL CONTRACTOR SHALL NOTIFY THE ARCHITECT IMMEDIATELY OF ANY SPECIFIED MATERIALS OR EQUIPMENT WHICH ARE EITHER UNAVAILABLE OR THAT WILL CAUSE A DELAY IN THE CONSTRUCTION COMPLETION SCHEDULE. THE CONTRACTOR SHALL SUBMIT CONFIRMATIONS OF DELIVERY DATES FOR ORDERS OF MATERIALS AND EQUIPMENT HAVING LONG LEAD TIMES.
15. ALL REQUESTS FOR SUBSTITUTIONS OF ITEMS SPECIFIED SHALL BE SUBMITTED IN WRITING AND WILL BE CONSIDERED ONLY IF BETTER SERVICE FACILITIES, A MORE ADVANTAGEOUS DELIVERY DATE, OR A LOWER PRICE WITH CREDIT TO THE OWNER / TENANT WILL BE PROVIDED WITHOUT SACRIFICING QUALITY, APPEARANCE, AND FUNCTION. UNDER NO CIRCUMSTANCES WILL THE ARCHITECT BE REQUIRED TO PROVE THAT A PRODUCT PROPOSED FOR SUBSTITUTION IS OR IS NOT OF EQUAL QUALITY TO THE PRODUCT SPECIFIED.
16. PROJECT SPECIFICATIONS ARE AN INTEGRAL PART OF THESE PLANS – SUBSTITUTIONS FOR SPECIFIED MATERIALS REQUIRE THE WRITTEN APPROVAL FROM THE ARCHITECT.
17. UNLESS OTHERWISE NOTED IN THE CONTRACT DOCUMENTS, THE CONTRACTOR SHALL SUBMIT ONE (1) SET OF SHOP DRAWINGS. SHOP DRAWINGS SHOULD INCLUDE DETAILED, FABRICATION AND ERECTION DRAWINGS, SETTING DRAWINGS, DIAGRAMMATIC DRAWINGS, AND MATERIAL SCHEDULES. LOCATION AND ORIENTATION OF ALL ITEMS SHOULD BE CLEARLY INDICATED. BEGIN FABRICATION OF SHOP ITEMS AFTER RECEIVING ARCHITECT'S OR DESIGNER'S APPROVAL OF SHOP DRAWINGS.
18. THE ARCHITECT'S REVIEW OF SHOP DRAWINGS SHALL NOT RELIEVE THE GENERAL CONTRACTOR OR SUBCONTRACTOR FROM RESPONSIBILITY FOR DEVIATIONS FROM THE DRAWINGS OR SPECIFICATIONS UNLESS HE HAS, IN WRITING, AND BROUGHT TO THE ATTENTION OF THE ARCHITECT SUCH DEVIATIONS AT THE TIME OF THE SUBMISSION, NOR SHALL IT RELIEVE HIM (GENERAL CONTRACTOR) FROM RESPONSIBILITY FOR ERRORS OF ANY SORT IN THE SHOP DRAWINGS.
19. THE GENERAL CONTRACTOR SHALL BE RESPONSIBLE FOR OBTAINING ALL REQUIRED BUILDING PERMITS PRIOR TO STARTING CONSTRUCTION.
20. PRIOR TO THE ISSUANCE OF A BUILDING PERMIT, THE APPLICANT SHALL HAVE EVIDENCE OF CURRENT WORKMAN'S COMPENSATION INSURANCE COVERAGE ON FILE WITH THE STATE LABOR DEPARTMENT IN COMPLIANCE WITH CURRENT LABOR CODES.
21. PROVIDE CONTINUOUS INSPECTIONS AS SET FORTH IN STATE AND LOCAL CODES AND PER CONTRACT DOCUMENTS AS NEEDED.
22. PRIOR TO THE ISSUANCE OF FINAL CERTIFICATE OF OCCUPANCY FOR THIS PROJECT, THE GENERAL CONTRACTOR SHALL SUBMIT A SIGNED CERTIFICATE TO THE DEPARTMENT OF BUILDING AND SAFETY STATING THAT ALL WORK HAS BEEN PERFORMED AND MATERIALS INSTALLED ACCORDING TO THE PLANS AND SPECIFICATIONS AFFECTING NON-RESIDENTIAL ENERGY.
23. CONTRACTOR SHALL VERIFY ALL BUILDING STANDARDS WITH BUILDING LANDLORD PRIOR TO BEGINNING ANY WORK. HOWEVER, THERE SHALL BE NO DEVIATIONS WHATSOEVER FROM THE CONTRACTOR DOCUMENTS WITHOUT THE ARCHITECT'S WRITTEN APPROVAL THEREOF. THE CONTRACTOR AGREES TO DEFEND, INDEMNIFY AND HOLD THE ARCHITECT HARMLESS FROM ANY CLAIMS ARISING AS A RESULT OF UNAPPROVED CHANGES.
24. UPON COMPLETION OF CONSTRUCTION, CONTRACTOR IS RESPONSIBLE FOR EMERGENCY RESPONDER RADIO COVERAGE TESTING AND COMPLIANCE.

DRAWING NOTES:

1. UNLESS OTHERWISE NOTED OR INDICATED, ALL DIMENSIONS ON THESE DOCUMENTS SHALL BE TO FACE OF CURB, FACE OF CONCRETE OR MASONRY, FACE OF FINISH OR CENTERLINE OF GRIDS.
2. ALL VERTICAL DIMENSIONS SHOWN ARE FROM FLOOR SLAB, U.O.N.
3. DIMENSIONS SHOWN IN FIGURES TAKE PRECEDENCE OVER DIMENSIONS SCALED FROM DRAWINGS. LARGE SCALE DRAWINGS AND DETAILS TAKE PRECEDENCE OVER SMALLER SCALE DRAWINGS.
4. THE TERM "ALIGN", AS USED IN THESE DOCUMENTS, SHALL MEAN TO ACCURATELY LOCATE FINISHES IN THE SAME PLANE.
5. "TYPICAL" AS USED IN THESE DOCUMENTS SHALL MEAN THAT THE CONDITION IS THE SAME OR REPRESENTATIVE FOR ALL SIMILAR CONDITIONS THROUGHOUT, U.O.N.
6. DETAILS ARE USUALLY KEYED AND NOTED "TYPICAL" ONLY ONCE, WHEN THEY FIRST OCCUR AND ARE REPRESENTATIVE OF ALL SIMILAR CONDITIONS THROUGHOUT, U.O.N.
7. COLUMN CENTERLINES (GRID LINES) ARE SHOWN FOR DIMENSIONING PURPOSES.
8. WHERE CONSTRUCTION DETAILS ARE NOT SHOWN OR NOTED FOR ANY PART OF THE WORK, THE DETAILS SHALL BE THE SAME AS FOR OTHER SIMILAR WORK IN THE SAME BUILDING.

INTERIOR □EXTERIOR NOTES:

1. WHERE ELECTRICAL, MECHANICAL AND/OR PLUMBING ITEMS, SUCH AS LIGHTS, DUCTS, PIPING, DOWNSPOUTS, ETC. ARE TO PENETRATE ANY BUILDING FOOTINGS, SLABS, FLOORS, STRUCTURAL FRAMING, WALL PARTITIONS, CEILINGS, ETC., IT IS REQUIRED THAT AN APPROPRIATELY SIZED OPENING OR CLEARANCE BE FURNISHED. CONTRACTOR SHALL COORDINATE THE INSTALLATION OF ALL ITEMS WITH THE CONSTRUCTION DOCUMENTS PRIOR TO THE INSTALLATION OF STRUCTURAL, MECHANICAL, PLUMBING AND ELECTRICAL WORK. ANY CONFLICT OR DISCREPANCY WITHIN CONSTRUCTION DOCUMENTS SHALL BE BROUGHT TO THE ARCHITECT'S ATTENTION FOR CLARIFICATION.
2. CONTRACTOR, ALONG WITH MECHANICAL CONTRACTOR, SHALL PROVIDE AND LOCATE ACCESS DOORS/PANELS IN WALL & CEILING CONSTRUCTION AS REQUIRED TO PROVIDE ACCESS TO MECHANICAL, FIRE SPRINKLER, PLUMBING & ELECTRICAL WORK. CONTRACTOR SHALL SUBMIT A PLAN OF ALL PROPOSED ACCESS PANEL LOCATIONS TO ARCHITECT FOR APPROVAL PRIOR TO INSTALLATION.
3. ALL PENETRATIONS AT RATED CONSTRUCTION SHALL BE PROTECTED TO MAINTAIN RATING.
4. WHERE OCCURS, CONTRACTOR SHALL PATCH ANY EXISTING WALLS AND/OR CEILINGS AS NEEDED TO REFURBISH THE LEASE SPACE AND REPAIR ALL DAMAGES CAUSED BY CONTRACTOR.
5. INTERIOR WALLS AND CEILINGS SHALL BE INSTALLED IN ACCORDANCE TO STATE & LOCAL CODES, INCLUDING REQUIREMENTS FOR FLAME SPREAD AND SMOKE DENSITY RATINGS FOR FINISH MATERIALS.
6. WHEN USED, ALL NOISE BARRIER BATTS (SOUND INSULATION) AND INSULATION BATTS SHALL BE NON-COMBUSTIBLE AND SHALL NOT CONTAIN OR UTILIZE OZONE DEPLETING COMPOUNDS.
7. ALL NEW CONSTRUCTION MATERIALS SHALL BE 100% ASBESTOS-FREE.
8. OUR FIELD VERIFICATION IS BASED ON THOSE BUILDING ELEMENTS WHICH ARE IMMEDIATELY AND READILY VISIBLE WITHOUT THE USE OF DEMOLITION OR REMOVAL OF ANY PERMANENT ELEMENTS.

JOB SITE NOTES:

1. WHERE EXISTING TENANTS/BUSINESSES ARE ADJACENT TO THE JOB SITE/TENANT, THE CONTRACTOR SHALL MINIMIZE CONSTRUCTION NOISE – EXTREME NOISE CONSTRUCTION SHALL OCCUR AT NON-TYPICAL BUSINESS HOURS. CONTRACTOR SHOULD NOTIFY BUILDING REPRESENTATIVE OF SPECIAL CIRCUMSTANCES IN ADVANCE PRIOR TO WORK.
2. THE CONTRACTOR AT HIS OWN EXPENSE, SHALL KEEP THE PROJECT AND SURROUNDING AREA FREE FROM DUST AND DEBRIS. THE WORK SHALL BE IN CONFORMANCE WITH THE AIR AND WATER POLLUTION CONTROL STANDARDS AND REGULATIONS OF THE STATE DEPARTMENT OF HEALTH.
3. CONSTRUCTION DEBRIS AND WASTES SHALL BE DEPOSITED AT AN APPROPRIATE SITE. THE CONTRACTOR SHALL INFORM THE BUILDING REPRESENTATIVE OF THE LOCATION OF DISPOSAL SITES.
4. CONTRACTOR SHALL BE RESPONSIBLE FOR THE GENERAL CLEANING OF THE JOB AFTER ITS COMPLETION. WHERE APPLICABLE, CLEANING SHALL INCLUDE, BUT NOT BE LIMITED TO, THE EXTERIOR AND THE INTERIOR OF THE BUILDING. THE PATH OF TRAVEL TO THE JOB SITE, PARKING LOTS, ELEVATORS, LOBBIES, AND CORRIDOR CARPETS.
5. THE CONTRACTOR SHALL PROVIDE PEDESTRIAN PROTECTION, WHERE REQUIRED PER STATE AND LOCAL CODES.
6. IF TRENCHES OR EXCAVATIONS 5'-0" OR MORE IN DEPTH ARE REQUIRED, OBTAIN ISSUANCE OF A BUILDING OR GRADING PERMIT.
7. NO HAZARDOUS MATERIALS SHALL BE USED OR STORED WITHIN THE BUILDING WHICH DOES NOT COMPLY WITH THE LOCAL FIRE AUTHORITY AND STATE & COUNTY REQUIREMENTS.
8. CONTRACTOR SHALL BE RESPONSIBLE FOR BLOCKING OFF SUPPLY AND RETURN AIR GRILLES, DIFFUSERS & DUCTS TO KEEP DUST FROM ENTERING INTO BUILDING AIR DISTRIBUTION SYSTEMS.
9. BUILDINGS UNDERGOING CONSTRUCTION, ALTERATION OR DEMOLITION SHALL BE DONE SO IN ACCORDANCE WITH STATE & LOCAL CODES.
10. THE CONTRACTOR SHALL TAKE ALL NECESSARY PRECAUTIONS TO ENSURE THE SAFETY OF THE OCCUPANTS AND WORKERS AT ALL TIMES.
11. THE CONTRACTOR SHALL BE RESPONSIBLE FOR THE COMPLETE SECURITY OF THE BUILDING AND SITE WHILE JOB IS IN PROGRESS AND UNTIL THE JOB IS COMPLETED.

PROJECT DATA

BUILDING DEPARTMENT:	CITY OF AURORA, COLORADO
BUILDING CODES:	2009 INTERNATIONAL BUILDING CODE 2014 NATIONAL ELECTRIC CODE 2009 INTERNATIONAL MECHANICAL CODE 2009 INTERNATIONAL PLUMBING CODE 2009 INTERNATIONAL FUEL GAS CODE 2009 INTERNATIONAL ENERGY CONSERVATION CODE 2003 ICC/ANSI A117.1, ACCESSIBILITY AND USABLE BUILDING AND FACILITIES NATIONAL FIRE PROTECTION ASSOCIATION STANDARDS
OCCUPANCY CLASSI□ICATION:	PER IBC CHAPTER 3 (SECTION 302) – B
□IRE PARTITION:	PER IBC CHAPTER 7 – 1-HOUR
TYPE O□ CONSTRUCTION:	PER IBC CHAPTER 6 (SECTION 602) – II-B
SPRINKLERED:	YES
NUMBER O□ STORIES:	4
ASSESSOR'S PARCEL NO.:	1973-24-1-23-003
PROJECT SCOPE:	THE SCOPE OF THIS PROJECT IS 2ND GENERATION INTERIOR BUILD OUT TO INCLUDE NEW MILLWORK, FINISH UPGRADES, AND NEW ADA COMPLIANT RESTROOM.
TENANT OCCUPANCY:	OFFICE (B) 2,072 S.F.

DE□ERRED SUBMITTAL:

DEFERRED SUBMITTAL ITEMS SHALL BE SUBMITTED TO THE ARCHITECT AND ENGINEERS OF RECORD WHO SHALL REVIEW AND PROVIDE NOTATION INDICATING DOCUMENTS HAVE BEEN REVIEWED AND FOUND TO BE IN GENERAL CONFORMANCE WITH THE BUILDING DESIGN. SUBMITTAL MATERIALS SHALL INCLUDE PLANS, DETAILS AND CALCULATIONS PREPARED AND SIGNED BY A STATE REGISTERED ENGINEER.
CONTRACTOR SHALL SUBMIT ARCHITECT AND ENGINEER REVIEWED SUBMITTAL MATERIALS TO THE BUILDING OFFICIAL FOR REVIEW AND PERMIT APPROVAL. DEFERRED SUBMITTAL ITEMS SHALL NOT BE INSTALLED PRIOR TO OBTAINING THE BUILDING OFFICIAL'S APPROVAL OF THE SUBMITTAL.

SHEET INDEX

ARCHITECTURAL (9 SHEETS)

A0.1	TITLE SHEET
A0.2	GENERAL NOTES
A0.3	ACCESSIBILITY NOTES
A1.1	OCCUPANCY AND EXIT PLAN
AD.1	DEMOLITION FLOOR PLAN AND DEMOLITION CEILING PLAN
A2.1	PARTITION PLAN AND POWER & SIGNAL PLAN
A3.1	REFLECTED CEILING PLAN AND FINISH PLAN
A4.1	ENLARGED RESTROOM PLAN & ELEVATIONS AND MILLWORK ELEVATIONS & DETAILS
A5.1	DETAILS

ELECTRICAL (2 SHEETS)

E0.0	ONE LINE, NOTES, AND SCHEDULES
E1.0	POWER PLAN AND LIGHTING PLAN

MECHANICAL (3 SHEETS)

M0.0	MECHANICAL NOTES, SPECIFICATIONS, AND SCHEDULE
M1.0	MECHANICAL DEMOLITION FLOORPLAN
M2.0	MECHANICAL FLOORPLAN

PLUMBING (3 SHEETS)

P0.0	PLUMBING NOTES, SPECIFICATIONS, AND SCHEDULE
P1.0	PLUMBING DEMOLITION FLOORPLAN
P2.0	PLUMBING FLOORPLAN

REVISION TO:
PERMIT 2015-1041852 LT
REVISIONS ARE TO THE FINISHES, CABINETS, DOORS, AND LIGHTS.

Code violations that are found during inspection are required to be corrected. Permit issuance does not grant approval of a code violation. **2009 IBC 105.4**

RSN: *1129333*
Permit #: *2016-1136607 LT*

City of Aurora Building Division
Reviewed for Code Compliance
Approved as Noted: *Craig Macy*
Date: *Jul 15, 2016*
2015 INTERNATIONAL CODES & 2014 NEC

SYMBOLS LEGEND

ALIGN
OFFICE — ROOM NAME
101 — ROOM NUMBER
NEW DOOR
— DOOR NUMBER (REFER TO DOOR SCHEDULE)
EXISTING DOOR
FE — FIRE EXTINGUISHER CABINET W/ FIRE EXTINGUISHER
FE — WALL-MOUNTED FIRE EXTINGUISHER
X — KEYNOTE INDICATOR
X — EQUIPMENT TAG
X — REVISION CLOUD & DELTA NUMBER
XX / XXX — DETAIL REFERENCE; SHEET NUMBER
XX / XXX — DETAIL SECTION REFERENCE; SHEET NUMBER
XX / XXX — SECTION REFERENCE; SHEET NUMBER
X / XXX — ELEVATION REFERENCE; SHEET NUMBER
1 / 4 / X / XXX / 2 / 3 — ELEVATION VIEW; ELEVATION REFERENCE; SHEET NUMBER
P / 1 — WALL MATERIAL TYPE; TYPE NUMBER
C / 1 — FLOOR MATERIAL TYPE; TYPE NUMBER
PL / 1 — MISC. MATERIAL TYPE; TYPE NUMBER

PROJECT MANAGER

C.B. RICHARD ELLIS
4500 EAST 9TH AVE, SUITE 600
DENVER, CO 80220
LILA WALKER
PH: (720) 528-6392

ARCHITECT

WARE MALCOMB
1600 CHAMPA ST. SUITE 350
DENVER, CO 80202
EMILY ZABEL
PH: (720) 488-2626

CONSULTANTS

ELECTRICAL ENGINEER
FRONT RANGE ELECTRICAL ENGINEERING
3333 S. WADSWORTH BLVD, SUITE D210
LAKEWOOD, CO 80227
CARL FRETWELL
PH: (303) 985-0548

MECHANICAL□PLUMBING ENGINEER
MOEN ENGINEERING CONSULTANTS, INC
2828 SPEER BLVD, SUITE 210
DENVER, CO 80211
BRYAN MOEN
PH: (303) 907-4285

□ICINITY MAP

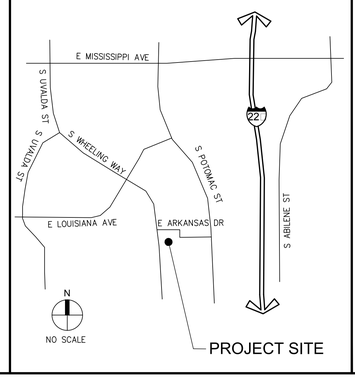

WARE MALCOMB
Leading Design for Commercial Real Estate

architecture
planning
interiors
graphics
civil engineering
1600 champa st.
suite 350
denver, colorado 80202
p 720.488.2626

STATE OF COLORADO
MICHAEL
NATHAN
CRAIKEN
306199
LICENSED ARCHITECT
12-14-15

SPEC SUITE
1411 S. POTOMAC ST, SUITE 440
AURORA, CO 80012

TITLE SHEET

DATE	REMARKS
11.06.15	ISSUE FOR BID
12.14.15	ISSUE FOR PERMIT
6.28.16	CLIENT REVISIONS

PA □PM:	E. ZABEL
DRAWN BY:	C.A.T.
JOB NO.:	DEN15-6178-00

SHEET
A0.1

THESE DRAWINGS AND SPECIFICATIONS ARE THE PROPERTY AND COPYRIGHT OF WARE MALCOMB AND SHALL NOT BE USED ON ANY OTHER WORK EXCEPT BY AGREEMENT WITH WARE MALCOMB. WRITTEN DIMENSIONS SHALL TAKE PRECEDENCE OVER SCALED DIMENSIONS AND SHALL BE VERIFIED ON THE JOB SITE. ANY DISCREPANCY SHALL BE BROUGHT TO THE NOTICE OF WARE MALCOMB PRIOR TO THE COMMENCEMENT OF ANY WORK.

T:\Jobs15\CB Richard Ellis – AuroraSouth Potomac\DEN15-6178-00_1411_Suite_440_Spec_Suite\Architectural\Coal\CD\6178_A01.dwg

Wed, 29 Jun 2016

CAUTION: IF THIS SHEET IS NOT 30"x42" IT IS A REDUCED PRINT

FINISH NOTES

1. NO FINISH SUBSTITUTIONS MAY BE MADE UNLESS APPROVED BY ARCHITECT.
2. CONTRACTOR MUST NOTIFY THE ARCHITECT OF ANY DISCREPANCY IN PLANS. FINISH ITEMS CLEARLY SHOWN IN PLANS, BUT OMITTED FROM SCHEDULES OR LEGENDS MUST STILL BE PROVIDED AND INSTALLED BY CONTRACTOR. CONTRACTOR TO VERIFY OMITTED FINISHED WITH ARCHITECT PRIOR TO ORDERING PRODUCTS.
3. INSTALL MATERIALS ACCORDING TO MANUFACTURER'S SUGGESTED INSTALLATION AND PREPARATION/MAINTENANCE SPECIFICATIONS OR BETTER, UNLESS OTHERWISE APPROVED OR NOTED.
4. APPLICATION OF CONTROLLED INTERIOR FINISHES SHALL BE IN CONFORMANCE WITH STATE & LOCAL CODES.
5. DECORATIVE MATERIALS SHALL BE MAINTAINED IN A FLAME-RETARDANT CONDITION.
6. SUBMIT THE FOLLOWING SAMPLES FOR ARCHITECT'S APPROVAL:
   A. THREE (3) 12" X 12" SAMPLES FOR ALL PAINT AND STAIN BRUSHOUTS, VINYL AND FABRIC FINISHES AND COLORS APPLIED TO A SUBSTRATE WHICH IS REPRESENTATIVE OF THE SURFACE TO BE FINISHED. SUBMIT PAINT SAMPLES FROM THE PAINT LOT OR LOTS INTENDED FOR APPLICATION.
   B. ONE (1) 24" X 24" MOCK-UP WITH SAMPLE SEAM (CENTERED) OF ALL FABRIC AND VINYL FINISHES AND COLOR.
   C. THREE (3) 12" X 12" SAMPLES OF ALL FLOOR COVERING.
   D. SUBMIT ACTUAL CUTTINGS OF EACH PRODUCT FOR COLOR/QUALITY CONTROL.
6. WHERE MATERIALS ARE NOT RETURNABLE, SUBMIT SAMPLES TO ARCHITECT BEFORE PLACING FULL ORDERS.
7. SUBMIT SEAMING PLAN FOR ALL FLOOR FINISHES TO ARCHITECT FOR APPROVAL PRIOR TO ORDER.
8. NOTIFY ARCHITECT IMMEDIATELY OF ITEMS WITH LONG LEAD TIMES.
9. ALL PAINT FINISH OF METAL PARTS OF DOORS, HANDRAILS, PERIMETER ENCLOSURES, ETC., SHALL BE SEMI-GLOSS, U.O.N.
10. WHERE PAINT COLORS CHANGE, CORNERS ARE TO BE CUT-IN FREE OF OVERLAPPING.
11. PRIOR TO THE INSTALLATION OF WALL COVERINGS, SURFACES SHALL BE PROPERLY PREPARED WITH SEALER PER MANUFACTURER'S RECOMMENDATIONS.
12. CONTRACTOR TO VERIFY CONDITION AND LEVEL OF FLOOR SO AS TO RECEIVE NEW FINISHES WITHOUT BOWING AT FLOOR OR WALL BASE. CONTRACTOR IS RESPONSIBLE FOR ALL FLOOR PREPARATION.
13. ALL CARPETING SHALL BE INSTALLED WITH GLUE DOWN METHOD, U.O.N.
14. WHERE FLOOR-MOUNTED OUTLETS ARE REQUIRED ON CARPETED AREA, CUT CARPET IN AN "X" OVER FLOOR HOLE AND INSTALL CARPET OVER TOP. DO NOT TRIM CARPET.
15. ALL V.C.T. TO BE INSTALLED WITH FULL TILE FROM VINYL THRESHOLD STRIP AND FULL TILE FROM WALL ADJACENT TO DOOR SWING, U.O.N.
16. PROVIDE AND INSTALL SPECIFIED BASE FOR ALL AREAS TO RECEIVE FLOORING.
17. CONTRACTOR SHALL PROVIDE PRE-FORMED RUBBER BASE CORNERS. DO NOT CUT OR BEND STRAIGHT BASE TO MAKE CORNERS.
18. MILLWORK LOWER CABINETS ARE NOT TO RECEIVE WALL BASE UNLESS INDICATED ON FINISH PLANS.
19. FLOOR FINISHES TO CONTINUE UNDERNEATH "OPEN FLOOR" AREAS OF MILLWORK, INCLUDING SINK AREA AND AT ALL UNDER-COUNTER EQUIPMENT AREAS WHICH ARE OPEN TO THE FLOOR.
20. FLOORS SHALL BE SLOPED TO FLOOR DRAINS. COORDINATE WITH PLUMBING AND STRUCTURAL DRAWINGS. IN RATED FLOOR CONDITIONS, CONFIRM REMAINING FLOOR THICKNESS STILL CONFORMS TO MINIMUM RATING REQUIREMENT.
21. CONTRACTOR TO RUN CALCIUM CHLORIDE TEST ON ALL EXISTING OR NEW CONCRETE SLABS PRIOR TO INSTALLING ANY FLOORING AND COMPARE RESULTS WITH FLOORING MANUFACTURE'S RECOMMENDED MAXIMUM CONTENT FOR WARRANTIES AND ADHESIVE PRODUCTS.
22. PRIOR TO NEW FLOORING INSTALLATION REMOVE EXISTING FLOOR FINISHES. PATCH AND REPAIR SUB-FLOOR AS REQUIRED. PREPARE FLOORS AND TRANSITIONS AS REQUIRED FOR SMOOTH AND LEVEL FINISH PER APPLICABLE BUILDING CODES.
23. ALL FLOORING TRANSITIONS AMONG ALL THE DIFFERING FLOORING MATERIAL SPECIFICATION TYPES ARE TO BE A FLUSH TRANSITION.
24. FEATHER SUB-FLOOR UP FOR A) TILE FLOORING TO CARPET AND B) VINYL FLOORING TO CARPET, FOR FLUSH INSTALLATION.
25. INSTALL METAL TRANSITION STRIPS WHERE TILE MEETS ALL OTHER FLOORING TYPES. PROVIDE LOW PROFILE TRANSITION STRIP WHERE ALL OTHER DIFFERENT FLOOR TYPES MEET, VERIFY COLOR.
26. CONTRACTOR TO HEAT/CHEMICAL SEAM VINYL FLOORING AS PER MANUFACTURER'S SPECIFICATIONS AND SEAL ALL VINYL FLOORS PER MANUFACTURER'S MAINTENANCE SPECIFICATIONS.
27. FLOOR COVERING INSTALLER TO FOLLOW MANUFACTURER'S SPECIFIED CARPET INSTALLATION INSTRUCTIONS. USING ADHESIVES AND INSTALLATION METHODS REQUIRED INSTRUCTIONS TO MAINTAIN PRODUCT'S WARRANTY. CONTACT CARPET SALES REPRESENTATIVE WITH QUESTIONS PRIOR TO PROCEEDING.
28. FLOOR COVERING INSTALLER TO FOLLOW MANUFACTURER'S SPECIFIED CONTOURED RUBBER BASE INSTALLATION INSTRUCTIONS USING ADHESIVES AND INSTALLATION METHODS REQUIRED TO MAINTAIN PRODUCT'S WARRANTY.
29. FLOOR COVERING INSTALLER REQUIRED TO PROVIDE MINIMAL SEAMS/JOINTS AT ALL LOCATIONS FOR FLOOR AND WALL BASE MATERIAL INSTALLATION. PROVIDE LOW VOC, BUT HEAVY DUTY ADHESIVES TO ENDURE HEAVY FOOT TRAFFIC, CARTS AND TO MAINTAIN PRODUCT'S WARRANTY.
30. PRIOR TO PAINTING, WALLS MUST BE PATCHED AND REPAIRED, CLEAN AND DRY AND PROPERLY MEMBERED AND ALIGNED SO, AS TO LEAVE NO EVIDENCE OF PATCHING OR REPAIRS. ALL SCREW AND NAIL HEADS MUST BE SET AND SPACKLED. ALL JOINTS MUST BE TAPED AND COVERED WITH JOINT COMPOUND. JOINTS THAT ARE FILLED TO BE SANDED SMOOTH AND DUST REMOVED PRIOR TO RECEIVING NEW PAINT FINISH APPLICATION.
31. PRIOR TO PAINTING OVER WALL COVERING, SECURELY GLUE DOWN ANY LIFTING OR BUCKLING AND HIDE ALL SEAMING OR BUMPS.
32. WALLS TO HAVE AT LEAST ONE COAT OF COLORED PRIMER AND TWO COATS OF SPECIFIED PAINT FINISH TYPE. PAINT TO BE A LOW VOC UNLESS U.O.N. HIGH TRAFFIC/WEAR ABILITY WITH GOOD SCRUB AND CLEANING ABILITY. VERIFY ALL WITH TENANT OR OWNER PRIOR TO PURCHASING PAINT.
33. PAINT ALL SPEAKER COVERS AND HVAC GRILLS IN GYPSUM BOARD WALLS AND CEILINGS TO MATCH ADJACENT PAINT COLOR AS SPECIFIED.
34. PRIOR TO INSTALLING WALL TILES AND WALL BASE TILE, WALLS MUST BE PATCHED AND REPAIRED, CLEAN AND DRY AND BE PROPERLY MEMBERED AND ALIGNED, SO, AS TO LEAVE NO EVIDENCE OF PATCHING OR REPAIRS. ALL SCREW AND NAIL HEADS MUST BE SET AND SPACKLED. ALL JOINTS MUST BE TAPED AND COVERED WITH JOINT COMPOUND. JOINTS THAT ARE FILLED ARE TO BE SANDED SMOOTH AND BUMP FREE WITH DUST REMOVED PRIOR TO RECEIVING MORTAR BED/BOND COAT AND WALL TILES.
35. ALL WALL TILES ARE TO HAVE A MORTAR BED/BOND COAT THICKNESS TO ACCOMMODATE THE VARYING THICKNESSES OF ALL MATERIAL TYPES OF TILE SPECIFIED FOR WALL INSTALLATION WITH A FLUSH FRONT FACE.
36. ALL TRANSLUCENT GLASS TILE SPECIFIED ARE TO RECEIVE UNIFORM COVERAGE BY BACK BUTTERING TILES AND TROWEL RIDGES FLATTENED PRIOR TO SETTING TRANSLUCENT GLASS TILES.
37. FLOORS OF TOILETS, BATHING AND SHOWER ROOMS SHALL HAVE A SMOOTH, HARD, NONABSORBENT SURFACE. THE INTERSECTION OF SUCH FLOORS WITH WALLS SHALL HAVE A SMOOTH, HARD, NONABSORBENT VERTICAL BASE AS SPECIFIED IN FINISH PLANS OR RESTROOM ELEVATIONS. BASE SHALL EXTEND UPWARD ONTO THE WALLS NOT LESS THAN 4 INCHES.
38. WALLS AND PARTITIONS WITHIN 2 FEET OF SERVICE SINKS, URINALS AND WATER CLOSETS SHALL HAVE A SMOOTH, HARD, NONABSORBENT SURFACE TO A HEIGHT OF NOT LESS THAN 4 FEET ABOVE THE FLOOR.

CEILING NOTES

1. SEE ELECTRICAL ENGINEERING DRAWINGS FOR SPECIFICATIONS OF NEW BUILDING STANDARD LIGHT FIXTURES, SWITCHES, EXIT SIGNS, ETC.
2. ALL REPLACEMENT FLUORESCENT LAMPS TO MATCH BUILDING STANDARD – SAME COLOR AND MANUFACTURER.
3. FIELD VERIFY EXISTING CEILING GRID LOCATION AND NOTIFY ARCHITECT OF ANY DISCREPANCIES ON PLANS.
4. WHERE DISCREPANCIES IN LOCATION OF LIGHT FIXTURES, AIR DIFFUSERS, GRILLES, ETC. OCCUR ON THE ELECTRICAL ENGINEERING PLANS, THE ARCHITECTURAL PLANS SHALL GOVERN. NOTIFY ARCHITECT OF ANY DISCREPANCIES FOR CLARIFICATIONS.
5. FIELD VERIFY ALL CLEARANCES OF DUCTS, PIPES, SPRINKLERS, ETC., AND NOTIFY ARCHITECT OF ANY CONFLICTS PRIOR TO INSTALLATION OF LIGHTS, ETC.
6. PLACEMENT OF LIGHT FIXTURES IN AREAS WHERE MAIN DUCTS MAY CAUSE INTERFERENCE MUST BE APPROVED BY ARCHITECT PRIOR TO INSTALLATION.
7. CONDUITS ABOVE CEILING MUST BE A MINIMUM OF 12" ABOVE THE CEILING GRID.
8. NO COMBUSTIBLE MATERIALS SHALL BE USED IN THE PLENUM SPACE, INCLUDING ALUMINUM FLEX, ALUMINUM CONDUIT, AND POT METAL CONNECTORS.
9. ALL JUNCTION BOXES AND MECHANICAL EQUIPMENT REQUIRING ACCESS FOR SERVICE SHALL BE LOCATED OVER ACOUSTICAL CEILINGS. NO ACCESS HATCHES SHALL BE INSTALLED IN GYPSUM BOARD CEILINGS WITHOUT PRIOR APPROVAL BY ARCHITECT. (NO EXCEPTION)
10. ALL SPRINKLER HEADS AT HARD-LID CEILINGS ARE TO BE FULLY RECESSED AND CONCEALED. HEADS ARE TO BE CENTERED BETWEEN LIGHTS IN A UNIFORM ARCHITECTURAL PATTERN. G.C. TO PROVIDE A SUBMITTAL WITH SPRINKLER HEAD LOCATIONS FOR ARCHITECT'S APPROVAL PRIOR TO INSTALLATION.
11. ALL GYPSUM BOARD CEILINGS ARE TO BE INSTALLED WITH LINEAR DIFFUSERS. G.C. TO PROVIDE A SUBMITTAL WITH ALL LINEAR DIFFUSER LOCATIONS PRIOR TO INSTALLATION.
12. LOCATE RECESSED DOWN LIGHTS, WALL WASHERS, SMOKE DETECTORS, EXIT SIGNS, SPEAKERS, FIRE SPRINKLERS, ETC. IN CENTER OF 24"x24" CEILING TILES OR IN CENTER OF 24"x24" PORTION OF 24"x48" CEILING TILES, UNLESS OTHERWISE NOTED.
13. PROVIDE SWITCHES AND LIGHT SENSORS FOR OPEN AREAS AND PRIVATE OFFICES. ACTUAL LOCATION OF ALL SWITCHES TO BE DETERMINED BY ELECTRICAL ENGINEER.
14. WHERE EXIT SIGNS ARE REQUIRED PER STATE & LOCAL CODES, THEY SHALL BE ILLUMINATED PER SAID CODES AND THE NEC. LOCATIONS SHALL BE COORDINATED WITH THE ARCHITECT.
15. PROVIDE BACK-UP POWER FOR EXIT SIGNS PER STATE & LOCAL CODES.
16. THE MEANS OF EGRESS, INCLUDING THE EXIT DISCHARGE, SHALL BE ILLUMINATED TO A LEVEL OF NOT LESS THAN ONE FOOT CANDLE AT THE WALKING SURFACE AT ALL TIMES THE BUILDING SPACE SERVED BY THE MEANS OF EGRESS IS OCCUPIED.
17. EMERGENCY LIGHTING SHALL BE (2) SEPARATE SOURCES OF POWER AND SHALL COMPLY WITH THE NEC.
18. PROVIDE FIRE DAMPERS AT ALL SUPPLY AND RETURN AIR OUTLETS, INLETS OR DUCTS PENETRATING FIRE RATED ASSEMBLIES, ENCLOSURES, WALLS, FLOORS OR SURFACES, AND AS REQUIRED BY THE FIRE DEPARTMENT.
19. CONTRACTOR SHALL PROVIDE EMERGENCY LIGHTING, STROBE LIGHTS, AUDIO-VISUAL ALARMS AND OCCUPANCY SENSORS TO MEET ALL APPLICABLE CODES.
20. CONTRACTOR SHALL PROVIDE LAMPS WITH TYPE IC RATED HOUSING WHERE FIXTURES COME IN DIRECT CONTACT WITH INSULATION.
21. EXIT SIGNS SHALL BE INTERNALLY OR EXTERNALLY ILLUMINATED AT ALL TIMES AND SHALL BE CONNECTED TO AN EMERGENCY POWER SYSTEM (BATTERIES, UNIT EQUIPMENT OR AN ON-SITE GENERATOR) THAT WILL AUTOMATICALLY ILLUMINATE THE EXIT SIGNS FOR A DURATION OF NOT LESS THAN 90 MINUETS.

MILLWORK NOTES

1. CONTRACTOR MUST NOTIFY ARCHITECT / DESIGNER OF ANY DISCREPANCY IN PLANS. FINISH ITEMS CLEARLY SHOWN IN PLANS, BUT OMITTED FROM SCHEDULES OR LEGENDS MUST STILL BE PROVIDED AND INSTALLED BY CONTRACTOR. CONTRACTOR TO VERIFY OMITTED FINISHES WITH ARCHITECT OR DESIGNER PRIOR TO ORDERING PRODUCTS.
2. SHOP DRAWINGS MUST BE PROVIDED FOR APPROVAL PRIOR TO FABRICATION TO THE ARCHITECT. CABINETMAKER SHALL USE ON SITE FIELD FRAMING DIMENSIONS FOR ALL SHOP DRAWINGS AND FABRICATIONS. ANY SUBSTITUTIONS TO THE FOLLOWING SPECIFICATIONS MUST BE APPROVED BY THE ARCHITECT PRIOR TO FABRICATION.
3. CABINET MAKER TO COORDINATE & VERIFY WITH CONTRACTOR FINAL LOCATION FOR CANTILEVERED COUNTERS FOR IN-WALL SUPPORT BRACKETS, PRIOR TO GYPSUM BOARD FINISHING OF WALLS. ALL FINAL INSTALLATION HEIGHTS FOR IN-WALL SUPPORT BRACKETS MUST MEET ALL APPLICABLE ACCESSIBILITY CODES AND STANDARDS WITH COUNTER TOP MATERIAL THICKNESS INCLUDED.
4. MATERIAL COLORS NOT LISTED SHALL BE REQUESTED FROM ARCHITECT/INTERIOR DESIGNER ON SHOP DRAWING SUBMITTALS OR BY LETTER.
5. ALL UPPERS TO BE LAMINATED TO MATCH BASE CABINETS. BOTH UPPERS & LOWER CABINETS IN WET AREAS TO HAVE MATCHING PVC EDGE, ALL OTHERS TO HAVE PLASTIC LAMINATE EDGE BANDING U.O.N.
6. ALL CABINETS AND DOORS SHALL BE CONSTRUCTED FROM 3/4" THICK MATERIAL, UNLESS APPROVED PRIOR TO EACH JOB.
7. ALL BASE CABINET ARE NOT TO RECEIVE WALL BASE UNLESS INDICATED ON FINISH PLANS OR ELEVATIONS.
8. ALL INTERIORS OF CLOSED CABINETS TO BE WHITE MELAMINE/POLYESTER OR APPROVED EQUAL, UNLESS OTHERWISE SPECIFIED.
9. ALL OPEN CABINETS OR SHELVES TO HAVE PLASTIC LAMINATE TO MATCH EXTERIORS.
10. NO 3/4" THICK SHELF SHALL SPAN LONGER THAN 32" WITHOUT SUPPORT.
11. ALL SHELVING TO BE ADJUSTABLE UNLESS OTHERWISE SPECIFIED.
12. ALL FILE PEDESTALS ARE TO BE CONFIGURED FOR "FRONT TO BACK" FILING AND BE ABLE TO ACCEPT METAL HANGERS TO ACCEPT PENDAFLEX TYPE FILE FOLDERS, UNLESS NOTED AS LATERAL.
13. ALL COUNTER TOPS TO BE 24" DEEP, UNLESS OTHERWISE SPECIFIED. WHERE NO BACKSPLASH IS SPECIFIED, COUNTER TOPS TO BE SCRIBED TIGHTLY TO BACK & SIDE WALLS.
14. ALL BACKSPLASHES TO BE SCRIBED TO WALLS, AND MUST BE FLUSH TO EDGE OF BASE, UNLESS OTHERWISE SPECIFIED. ALL COUNTER TRANSITION SEAMS MUST BE CAULKED SEALED, VERIFY EITHER MATCHING COLOR CAULK OR CLEAR SILICONE.
15. PROVIDE SIDE SPLASHES AT LOCATIONS ADJACENT TO WALLS OR WINDOWS, ESPECIALLY FOR SINKS U.O.N.
16. FACES OF PIGEONHOLES TO MATCH WORK SURFACE LAMINATE. COLOR OF EDGE BANDING ON ALL DOORS TO MATCH FACE MATERIAL.
17. SEE SPECIFICATIONS/PROJECT MANUAL FOR ADDITIONAL REQUIREMENTS.
18. COUNTERTOPS SHALL HAVE A NOSING OF COUNTERTOP MATERIAL AT LEAST 3" DEEP, WHEREBY THE COUNTER MATERIAL EXTENDS INTO THE INSIDE OF THE CABINET, I.E. OVER THE DOOR (WHEN PRESENT).
19. END PANELS AND FRONT EDGES OF EDGE PANELS WHICH ARE PROUD OF THE INTERIOR CABINET SHALL BE FACED TO MATCH DOOR FRONTS.
20. ALL HINGED DOORS TO HAVE CLEAR SILENCERS TOP AND BOTTOM ON DOOR (NOT CABINET).
21. ALL DRAWERS GLIDES SHALL HAVE SILENCERS BUILT INTO THE GLIDE AND NOT INSTALLED ON THE DRAWER OR DRAWER FRONT.
22. ALL DRAWER GLIDES SHALL BE FULL EXTENSION.
23. ALL HINGES SHALL OPEN ±105°, EXCEPT WHERE CABINETS ARE ADJACENT TO THE WALLS. PROVIDE HINGES WHICH LIMIT THE DOOR SWING TO KEEP THE DOOR PULL FROM DAMAGING THE WALL.

PARTITION PLAN NOTES

1. CONTRACTOR AND ARCHITECT TO REVIEW & APPROVE CHALK LINES OF PARTITION LAYOUT PRIOR TO COMMENCEMENT OF PARTITION CONSTRUCTION.
2. CONTRACTOR TO VERIFY DIMENSIONS FOR ALL PLUMBING PARTITION.
3. EXTEND ALL STUDS AND WALL MATERIALS TO CONSTRUCTION ABOVE, U.O.N.
4. ALL CONDUIT PIPING IN ELECTRICAL ROOM TO BE CONCEALED WITHIN THE WALL CONSTRUCTION.
5. DOOR OPENINGS IN PARTITIONS NOT DIMENSIONED ARE TO BE LOCATED WITHIN 0'-4" OF ADJACENT PERPENDICULAR PARTITION.
6. CONTRACTOR SHALL USE 3-5/8" METAL STUDS MINIMUM AT ALL PLUMBING WALLS. CONTRACTOR TO VERIFY ACTUAL DEPTH REQUIRED, ANY DISCREPANCIES SHALL BE REPORTED TO THE ARCHITECT.
7. USE WATER RESISTANT GYPSUM BOARD/FIBER BOARD AT ALL AREAS SUBJECT TO MOISTURE OR WHERE TILE IS USED.
8. ALL PLUMBING WORK SHALL BE IN ACCORDANCE WITH LOCAL AND NATIONAL CODES.
9. ALL HOT WATER LINES SHALL BE PROPERLY INSULATED. SEE PLUMBING DRAWINGS.
10. ALL PLUMBING CLEAN-OUTS SHALL BE INSTALLED WHERE READILY ACCESSIBLE. CONTRACTOR SHALL COORDINATE ALL CLEAN-OUT LOCATIONS WITH EQUIPMENT, AND CABINETS. SUBMIT A PLAN OF ALL PROPOSED LOCATIONS TO ARCHITECT FOR APPROVAL PRIOR TO INSTALLATION.
11. ALL MILLWORK SHALL CONFORM TO STATE & LOCAL WOODWORKING STANDARDS.
12. FIELD MEASURE AS REQUIRED FOR ALL MILLWORK CONDITIONS PRIOR TO FABRICATION.
13. CONTRACTOR TO PROVIDE SHOP DRAWINGS FOR ARCHITECT AND TENANT APPROVAL PRIOR TO MANUFACTURE OF ANY CABINET WORK, MILLWORK AND ANY OTHER SPECIAL ITEMS REQUIRING CUSTOM SHOP FABRICATED WORK.
14. CONTRACTOR TO VERIFY FINAL LOCATION FOR CANTILEVERED COUNTERS AND IN-WALL SUPPORT BRACKETS PRIOR TO GYPSUM BOARD FINISHING OF WALLS. ALL FINAL INSTALLATION HEIGHTS FOR IN-WALL SUPPORT BRACKETS MUST MEET ALL ACCESSIBILITY CODES REQUIREMENTS WITH COUNTERTOP MATERIAL THICKNESS INCLUDED.
15. PROVIDE AND INSTALL ALL NECESSARY WALL BACKING, STIFFENERS, BRACING, BACK-UP PLATES AND/ OR SUPPORTING BRACKETS AS REQUIRED FOR THE INSTALLATION OF WALL-MOUNTED OR SUSPENDED EQUIPMENT OR BUILT-IN ITEMS. VERIFY REQUIREMENTS WITH MANUFACTURERS PRIOR TO INSTALLATION. SUPPLY CATALOG CUT SHEETS FOR ARCHITECT'S APPROVAL.
16. PROVIDE AND INSTALL ALL NECESSARY ELECTRICAL CONNECTIONS AND PLUMBING SUPPLY, FITTINGS & CONNECTORS TO COMPLETE INSTALLATION OF APPLIANCES & EQUIPMENT INDICATED ON PLAN. VERIFY REQUIREMENTS WITH MANUFACTURERS PRIOR TO INSTALLATION. SUPPLY CATALOG CUT SHEETS FOR ARCHITECT'S APPROVAL.
17. EXACT LOCATION OF FIRE EXTINGUISHER CABINETS TO BE CONFIRMED WITH ARCHITECT BEFORE INSTALLATION. PROVIDE ADDITIONAL FIRE EXTINGUISHERS & CABINETS AS REQUIRED BY THE FIRE DEPARTMENT FIELD INSPECTORS.
18. CONTRACTOR TO VERIFY LOCATION OF ALL THERMOSTATS WITH ARCHITECT PRIOR TO INSTALLATION.
19. ALL EXITS SHALL HAVE EXIT SIGNS AND ALL BLIND CORRIDOR TURNS SHALL HAVE DIRECTIONAL EXIT SIGNS.
20. PREPARE ALL FLOOR SURFACES AS REQUIRED TO RECEIVE FINISHES AS NOTED ON FINISH PLAN, ENLARGED FINISH PLANS & FINISH LEGEND.
21. UNLESS OTHERWISE NOTED, ALL GYPSUM BOARD SURFACES, WALLS, AND CEILINGS SHALL BE TAPED, SANDED SMOOTH TO A "LEVEL 4" FINISH, SO AS TO RECEIVE PAINT OR WALL COVERING MATERIAL.
22. PROVIDE SOUND INSULATION AT PERIMETER WALLS OF RESTROOMS, LOBBY, STAIRS, AND ACROSS CEILING OF RESTROOMS TO CREATE AN ACOUSTIC ENVELOPE, U.O.N.
23. PATCH AND FILL VARIOUS OPENINGS AT EXISTING GYPSUM BOARD PARTITIONS AND SOFFITS FOLLOWING REMOVAL OR INSTALLATION OF ANY SURFACE MOUNTED OR RECESSED FURNISHINGS, RECEPTACLES, UTILITY PIPING, SHELF STANDARDS & ALL OTHER SIMILAR ELEMENTS INDICATED TO BE REMOVED DURING THE DEMOLITION PHASE OR INSTALLED DURING THE CONSTRUCTION PHASE: TAPE AND SEAL ALL SEAMS WITH JOINT COMPOUND: APPLY NEW FINISH TO MATCH EXISTING FINISH AT ADJACENT GYPSUM BOARD SURFACES AND FEATHER NEW FINISH WITH EXISTING FINISH TO PROVIDE CONSISTENT & CONTINUOUS FINISH.

POWER / SIGNAL NOTES

1. COORDINATE TELEPHONE/DATA INSTALLATION WITH APPROPRIATE SUB-CONTRACTOR.
2. ALL EXISTING ELECTRICAL DEVICES ARE TO REMAIN, UNLESS NOTED OTHERWISE.
3. ALL OUTLETS TO BE INSTALLED AT LOCATIONS SHOWN BY DIMENSIONS ON THE POWER & SIGNAL PLAN. DIMENSION ALL OUTLETS FROM THE CENTERLINE OF THE OUTLET BOX. NON-DIMENSIONED OUTLETS ARE TO LOCATED AT THE NEAREST WALL STUD.
4. WHEN OUTLETS ARE GROUPED TOGETHER (2 OR MORE), THEY ARE TO BE SPACED NO MORE THAN 2" APART.
5. ALL ELECTRICAL OUTLETS OF 30 AMPERES OR LESS SHALL BE MOUNTED BETWEEN +15" TO BOTTOM RECEPTACLE AND +48" TO TOP OF RECEPTACLE FROM FINISH FLOOR. SEE NOTE 6, BELOW, FOR GENERAL MOUNTING HEIGHT
6. ALL NEW WALL MOUNTED 15, 20, AND 30 AMP OUTLETS/RECEPTACLES TO BE CENTERED AT +18" A.F.F., U.O.N.
7. ALL TELEPHONE AND DATA CABLE TO BE TEFLON COATED PLENUM RATED CABLE, SUPPORTED INDEPENDENTLY FROM SUSPENDED CEILING SYSTEM. CABLING TO BE SUPPLIED BY TENANT; ALL PULLS AND TERMINATIONS BY GENERAL CONTRACTOR.
8. LOCATIONS OF FURNITURE POWER FEEDS SHALL ACCOMMODATE CIRCUITS AND WIRE PER ELECTRICAL DRAWINGS. TENANT SHALL BE RESPONSIBLE FOR PROVIDING FURNITURE POWER FEED, GENERAL CONTRACTOR SHALL INSTALL THE POWER FEED.
9. WHERE DEDICATED ELECTRICAL OUTLETS ARE NOTED WITHIN THE FURNITURE PANEL SYSTEM, THE PANEL SYSTEM SHALL ACCOMMODATE THIS REQUIREMENT.
10. FLOOR OUTLETS ARE ACCEPTABLE NEXT TO SLIDING PANELS/WALLS AND OTHER SPECIAL CONVENIENT LOCATIONS.
11. WHERE ELECTRICAL WORK IS SPECIFIED IN CONJUNCTION WITH CABINET WORK, LAMPS AND FIXTURES ARE TO BE PROVIDED BY THE GENERAL CONTRACTOR.
12. CUT-OUTS FOR SWITCHES, OUTLETS, ETC. AS REQUIRED BY THE CABINET CONTRACTOR ARE TO BE COORDINATED WITH THE ELECTRICAL CONTRACTOR, U.N.O. ALL RECEPTACLES WHERE MILLWORK OCCURS SHALL BE LOCATED PER ELEVATIONS OF THE MILLWORK ITEM IN QUESTION.
13. ALL WALL COVER PLATES SHALL BE WHITE, UNLESS BUILDING STANDARD IS DIFFERENT, MATCH BUILDING STANDARD.
14. ALL SEPARATE CIRCUIT RECEPTACLES TO BE ORANGE COLOR WITH BUILDING STANDARD COLOR COVER PLATE.
15. POWER/SIGNAL AND REFLECTED CEILING PLANS ARE FOR THE GENERAL INFORMATION OF THE CONTRACTOR. EXACT LOCATIONS SHOULD BE VERIFIED.
16. TENANT TO PROVIDE AND INSTALL THE TELEPHONE AND DATA COMMUNICATION CABLING. CONTRACTOR TO COORDINATE SCHEDULING AND OTHER REQUIREMENTS WITH TENANT.
17. ALL/ANY CORE DRILL LOCATIONS SHALL BE VERIFIED WITH DESIGNER PRIOR TO DRILLING. ALL UNUSED CORE DRILLS SHALL BE PLUGGED AND CAPPED AS REQUIRED TO MAINTAIN FLOOR FIRE RATING.
18. ALL TELEPHONE AND COMPUTER WIRES SHALL BE PULLED BY TENANT CONTRACTOR U.O.N. ELECTRICAL CONTRACTOR SHALL PROVIDE PULL WIRES AND BOXES AT EACH LOCATION.
19. CONTRACTOR SHALL OBTAIN APPROVAL FROM ARCHITECT FOR ALL THERMOSTAT LOCATIONS.

FIRE AUTHORITY NOTES

1. FINAL INSPECTION BY FIRE DEPARTMENT IS REQUIRED – SCHEDULE 72 HOURS IN ADVANCE.
2. THE PROJECT ADDRESS SHALL BE PROVIDED FOR ALL NEW AND EXISTING BUILDINGS IN A POSITION AS TO BE PLAINLY VISIBLE AND LEGIBLE FROM THE STREET OR ROAD FRONTING THE PROPERTY PER LOCAL FIRE DEPARTMENT STANDARDS.
3. AN UNOBSTRUCTED ALL-WEATHER FIRE APPARATUS ACCESS ROAD SHALL BE IN PLACE PRIOR TO DELIVERY OF COMBUSTIBLE BUILDING MATERIALS TO THE SITE.
4. FIRE PREVENTION WATER SERVICE SHALL BE IN SERVICE PRIOR TO DELIVERY OF COMBUSTIBLE BUILDING MATERIALS TO THE SITE.
5. ACCESS GATES SHALL BE APPROVED PRIOR TO INSTALLATION AND SHALL BE IN COMPLIANCE WITH LOCAL FIRE AUTHORITY.
6. FIRE SPRINKLER SYSTEM(S) SHALL MEET STATE & LOCAL FIRE CODES AND BE PROVIDED TO PROTECT ENTIRE BUILDING INCLUDING PROJECTIONS OVER 4'-0" AND SPRAY BOOTH.
7. FIRE SPRINKLER SYSTEM(S) AND ALL CONTROL VALVES, INCLUDING EXTERIOR SHALL BE SUPERVISED BY A U.L. LISTED CENTRAL ALARM STATION OR PER STATE & LOCAL FIRE CODES.
8. ALL VALVES CONTROLLING THE WATER SUPPLY FOR AUTOMATIC SPRINKLER SYSTEMS AND WATER-FLOW SWITCHES ON ALL SPRINKLER SYSTEMS SHALL BE ELECTRICALLY MONITORED WHERE THE NUMBER OF SPRINKLERS IS (100) OR MORE.
9. ELECTRICAL SUBCONTRACTORS TO INSTALL WIRING FOR FIRE SPRINKLER, ALARM BELL AND TELEPHONE WARNING AS REQUIRED BY FIRE DEPARTMENT.
10. INSTALLATION OF FIRE ALARM SYSTEMS SHALL BE IN ACCORDANCE WITH STATE & LOCAL FIRE CODES.
11. COMPLETE PLANS AND SPECIFICATIONS FOR ALL FIXED FIRE PROTECTION EQUIPMENT INCLUDING AUTOMATIC SPRINKLERS AND OTHER FIRE-PROTECTION SYSTEMS, SHALL BE SUBMITTED BY INSTALLING CONTRACTOR. SUCH PLANS SHALL BE APPROVED BY LOCAL FIRE AUTHORITY PRIOR TO INSTALLATION.
12. LOCATIONS AND CLASSIFICATIONS OF FIRE EXTINGUISHERS SHALL BE IN ACCORDANCE WITH STATE & LOCAL FIRE CODES AND PLACEMENT IS SUBJECT TO THE APPROVAL OF THE FIRE INSPECTOR. VERIFY QUANTITY & EXACT LOCATION FROM FIRE DEPARTMENT PRIOR TO ORDERING.
13. AT LEAST ONE (1) FIRE EXTINGUISHER WITH A MINIMUM RATING OF: 2-A-10B:C (FOR OFFICE), OR 10-A-80B:C (FOR WAREHOUSE), SHALL BE PROVIDED WITHIN 75'-0" MAXIMUM TRAVEL DISTANCE FOR EACH 3,000 SQUARE FEET OR PORTION THEREOF ON EACH FLOOR.
14. STORAGE, DISPENSING OR USE OF ANY FLAMMABLE AND COMBUSTIBLE LIQUIDS, FLAMMABLE AND COMPRESSED GASES, AND OTHER HAZARDOUS MATERIALS SHALL COMPLY WITH STATE & LOCAL FIRE CODES. THE STORAGE AND USE OF HAZARDOUS MATERIALS SHALL BE APPROVED BY THE FIRE AUTHORITY PRIOR TO ANY MATERIALS BEING STORED OR USED ON SITE. A SEPARATE PLAN SUBMITTAL IS REQUIRED PRIOR TO THE STORAGE AND USE OF HAZARDOUS MATERIALS.
15. BUILDING(S) NOT APPROVED FOR HIGH-PILED STOCK (MATERIALS IN CLOSELY PACKED PILES OR ON PALLETS, OR IN RACKS WHERE THE TOP OF STORAGE EXCEEDS 12'-0" IN HEIGHT, AND 6'-0" FOR GROUP "A" PLASTICS AND CERTAIN OTHER HIGH-HAZARD COMMODITIES). HIGH-PILED STOCK SHALL BE APPROVED BY THE FIRE AUTHORITY PRIOR TO MATERIALS BEING STORED ON SITE. A SEPARATE PLAN SUBMITTAL IS REQUIRED FOR HIGH-PILED STORAGE IN ACCORDANCE WITH STATE & LOCAL FIRE CODES.
16. A LETTER OF INTENDED USE MAY BE REQUIRED BY THE FIRE INSPECTOR.
17. ALL REQUIRED FIRE DOORS SHALL BEAR A LABEL FROM A RECOGNIZED AGENCY SHOWING THE SPECIFIC RATING.
18. EXIT SIGNS AND ILLUMINATION SHALL CONFORM TO ALL APPLICABLE BUILDING AND FIRE CODES.
19. EXIT DOORS SHALL BE OPERABLE FROM THE INSIDE WITHOUT THE USE OF A KEY OR ANY SPECIAL KNOWLEDGE OR EFFORT.
20. PROVIDE OR MODIFY AS NEEDED SPRINKLER ALARM AND SMOKE DETECTION SYSTEM PER APPLICABLE CODES INCLUDING IF NECESSARY FOR HORNS,

CAUTION: IF THIS SHEET IS NOT 30"x42" IT IS A REDUCED PRINT

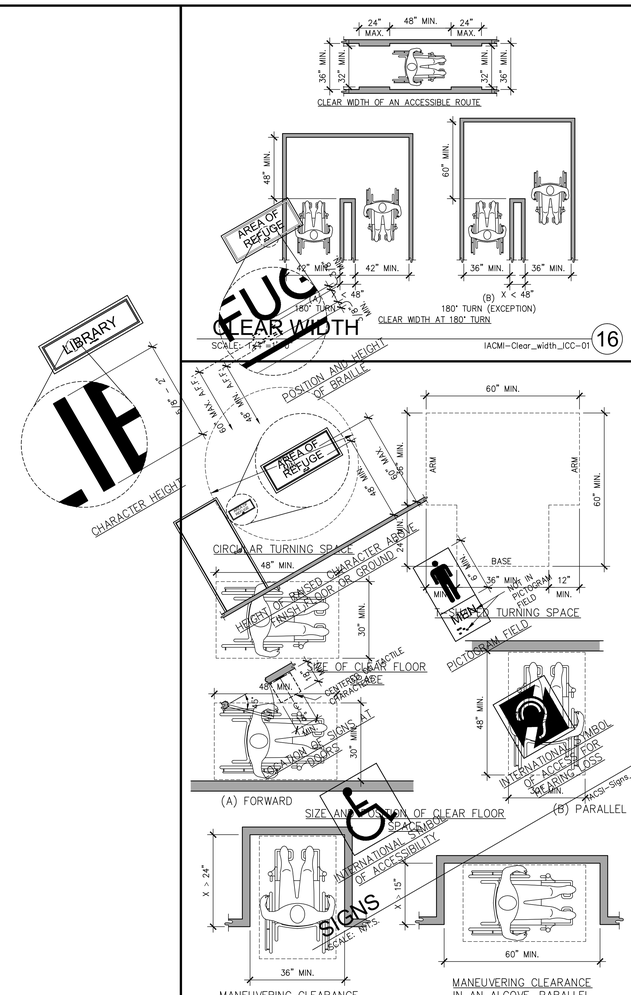

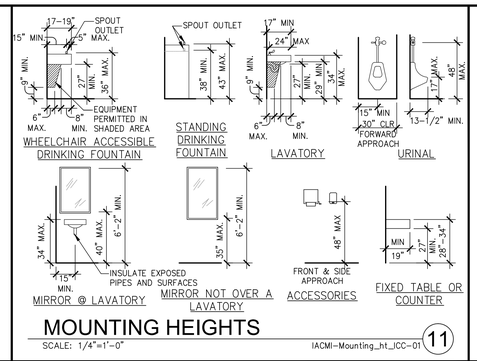

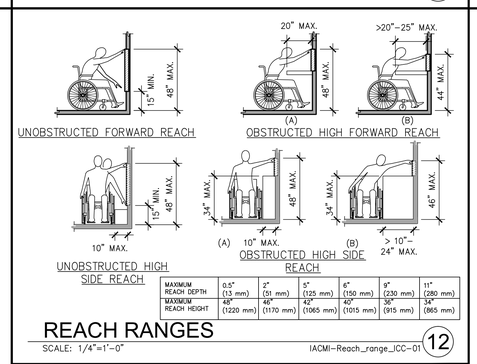

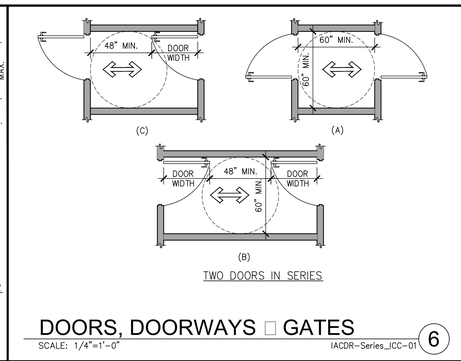

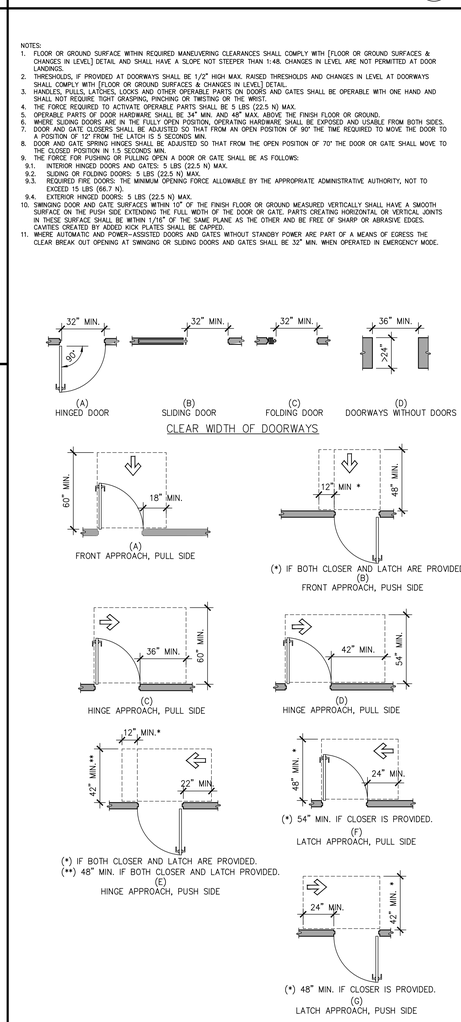

ACCESSIBILITY NOTES

1. ALL ITEMS ARE FOR REFERENCE ONLY, ANY ITEM NOT SHOW SHALL BE REFERENCED IN THE 2012 INTERNATIONAL BUILDING CODE AND ICC-A117.1-2009.
2. ANY DISCREPANCIES CONTAINED HEREIN DO NOT RELIEVE THE CONTRACTOR OR OWNER FROM COMPLYING WITH CURRENT STATE AND FEDERAL ACCESSIBILITY STANDARDS.
3. THE CONTRACTOR SHALL BECOME FAMILIAR WITH THE CURRENT STATE AND FEDERAL ACCESSIBILITY STANDARDS.
4. REFER TO 2012 INTERNATIONAL BUILDING CODE, CHAPTER 11 AND ICC-A117.1-2009 FOR CURRENT AND UP TO DATE INFORMATION.

RSN: 1129333
Permit #: 2016-1136607 LT

This sheet of drawings has not been reviewed for code compliance.

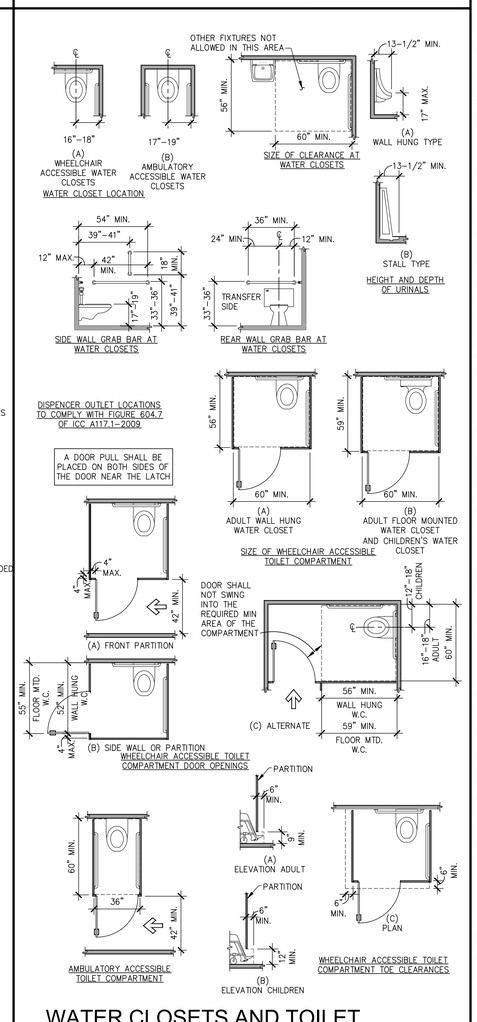

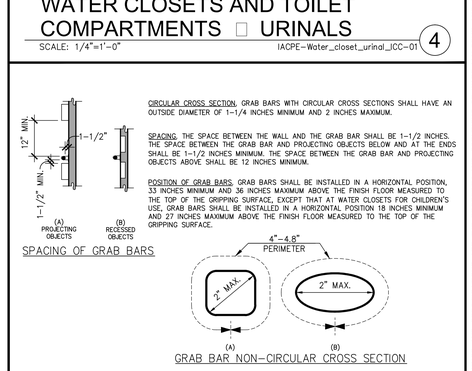

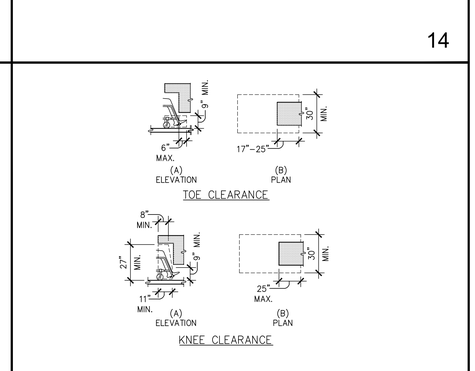

14

WARE MALCOMB
Leading Design for Commercial Real Estate

architecture
planning
interiors
graphics
civil engineering

1600 champa st.
suite 300
denver, colorado 80202
p 720.888.2626

STATE OF COLORADO
MATTHEW AND NATHAN CRAIKEN
306199
LICENSED ARCHITECT
12-14-15

SPEC SUITE
1411 S. POTOMAC ST, SUITE 440
AURORA, CO 80012

ACCESSIBILITY DETAILS

DATE	REMARKS
1.06.15	ISSUE FOR BID
12.14.15	ISSUE FOR PERMIT
6.28.16	CLIENT REVISIONS

PA :PM:	E. ZABEL
DRAWN BY:	C.U.
JOB NO.:	DEN15-6178-00

SHEET
A0.

THESE DRAWINGS AND SPECIFICATIONS ARE THE PROPERTY AND COPYRIGHT OF WARE MALCOMB AND SHALL NOT BE USED ON ANY OTHER WORK EXCEPT BY AGREEMENT WITH WARE MALCOMB. WRITTEN DIMENSIONS SHALL TAKE PRECEDENCE OVER SCALED DIMENSIONS AND SHALL BE VERIFIED ON THE JOB SITE. ANY DISCREPANCY SHALL BE BROUGHT TO THE NOTICE OF WARE MALCOMB PRIOR TO THE COMMENCEMENT OF ANY WORK.

T:\Jobs15\CB Richard Ellis - AuroraSouth Potomac\DEN15-6178-00_1411_Suite_440_Spec_Suite\Architectural\Cad\CD\6178_A03.dwg

Wed, 29 Jun 2016

CAUTION: IF THIS SHEET IS NOT 30"x42" IT IS A REDUCED PRINT

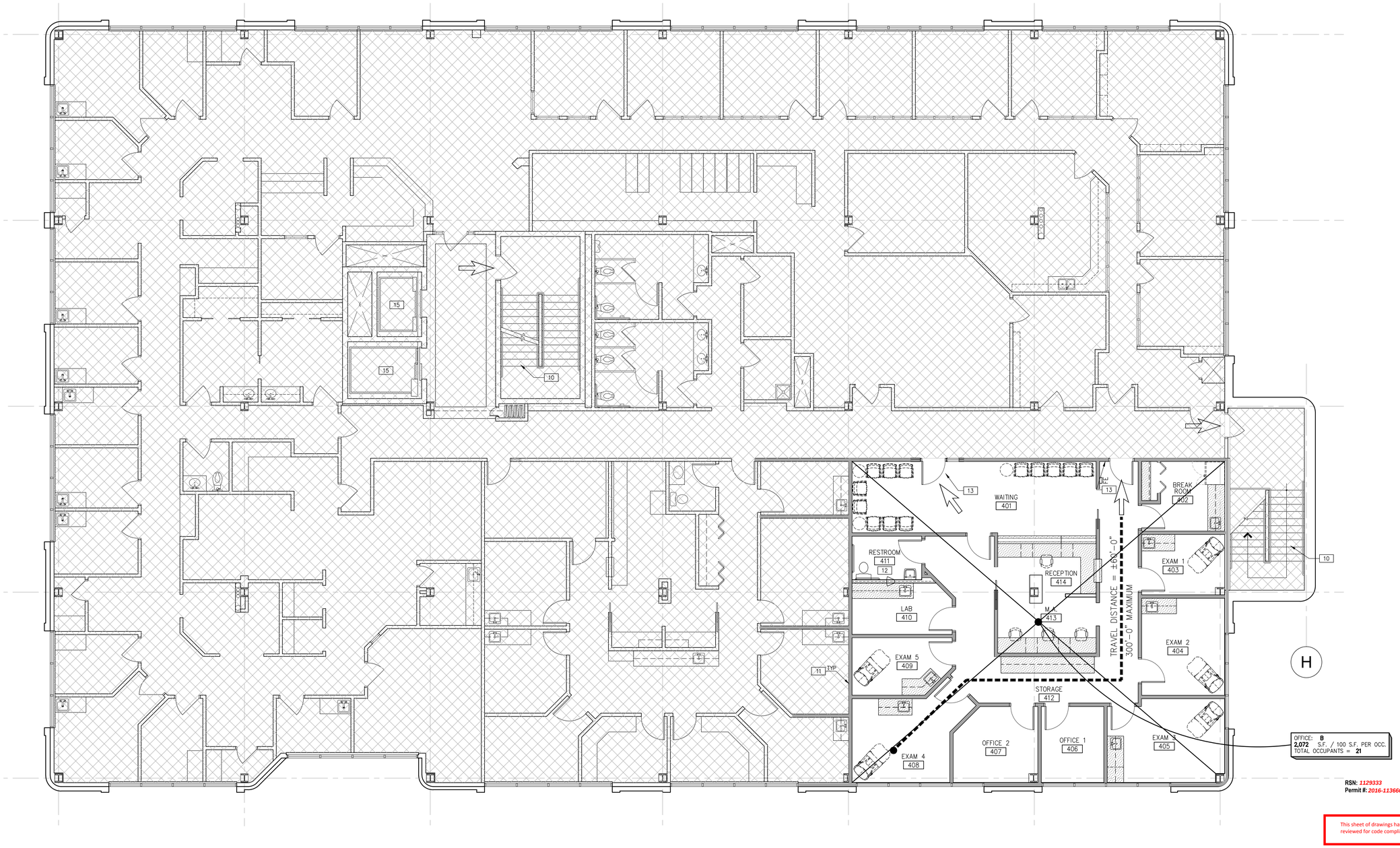

OCCUPANCY AND EXIT PLAN

SCALE: 1/4"=1'-0"

OCCUPANCY EXIT PLAN NOTES

10 EXISTING STAIR TO REMAIN.

11 EXISTING TENANT SEPARATION WALL TO REMAIN.

12 NEW FULLY ACCESSIBLE RESTROOM FACILITY.

13 WALL-MOUNTED TACTILE "EXIT" SIGN AT LOCATIONS INDICATED. SEE X/A0.3

14 NEW WALL-MOUNTED FIRE EXTINGUISHER, #3005 BY POTTER-ROEMER, 2A:10B:C, WITH WALL BRACKET.

15 EXISTING ELEVATOR TO REMAIN.

SEE SHEET A0.2 FOR GENERAL NOTES RELATING TO DOORS

TRAVEL DISTANCE TO EXITS

MAXIMUM TRAVEL DISTANCE TO EXITS (1016.2 SPRINKLERED BUILDING):
B/BUSINESS (OFFICE)..... 300 FEET MAX.

LEGEND

INDICATES AREA NOT IN CONTRACT (N.I.C.)

OCCUPANCY EXIT LEGEND

INDICATES EXISTING EXIT

UNOBSTRUCTED PATH OF TRAVEL

CEILING-MOUNTED EXIT SIGN W/ BATTERY BACKUP, SHADED QUADRANT INDICATES FACE OF LETTERING, SIGN TO INCLUDE DIRECTIONAL ARROW AS INDICATED - SEE ELEC. DWGS.

NOTE: EXIT SIGNS SHALL BE SELF-LUMINOUS TYPE OR ELECTRICALLY ILLUMINATED & ENERGIZED FROM SEPARATE CIRCUITS, ONE OF WHICH SHALL BE FROM STORAGE BATTERIES OR AN ON-SITE GENERATOR.

NOTE: ADDITIONAL DIRECTIONAL EXIT SIGNS MAY BE REQUIRED PRIOR TO FINAL INSPECTION AND SUBJECT TO BUILDING INSPECTOR.

THESE DRAWINGS AND SPECIFICATIONS ARE THE PROPERTY AND COPYRIGHT OF WARE MALCOMB AND SHALL NOT BE USED ON ANY OTHER WORK EXCEPT BY AGREEMENT WITH WARE MALCOMB. WRITTEN DIMENSIONS SHALL TAKE PRECEDENCE OVER SCALED DIMENSIONS AND SHALL BE VERIFIED ON THE JOB SITE. ANY DISCREPANCY SHALL BE BROUGHT TO THE NOTICE OF WARE MALCOMB PRIOR TO THE COMMENCEMENT OF ANY WORK.

WARE MALCOMB
Leading Design for Commercial Real Estate

architecture
planning
interiors
graphics
civil engineering

1600 champa st.
suite 350
denver, colorado 80202
p 720.888.3626

STATE OF COLORADO
MATTHEW NATHAN OHAIKEN
306199
LICENSED ARCHITECT
12-14-15

SPEC SUITE
1411 S. POTOMAC ST, SUITE 440
AURORA, CO 80012

OCCUPANCY AND EXIT PLAN

DATE	REMARKS
11.06.15	ISSUE FOR BID
12.14.15	ISSUE FOR PERMIT
6.28.16	CLIENT REVISIONS

PA PM:	E. ZABEL
DRAWN BY:	C.A.T.
JOB NO.:	DEN15-6178-00

SHEET
A1.1

Wed, 29 Jun 2016

T:\Jobs15\CB Richard Ellis - AuroraSouth Potomac\DEN15-6178-00_1411_Suite_440_Spec_Suite\Architectural\Cad\CD\6178_A11.dwg

CAUTION: IF THIS SHEET IS NOT 30"x42" IT IS A REDUCED PRINT

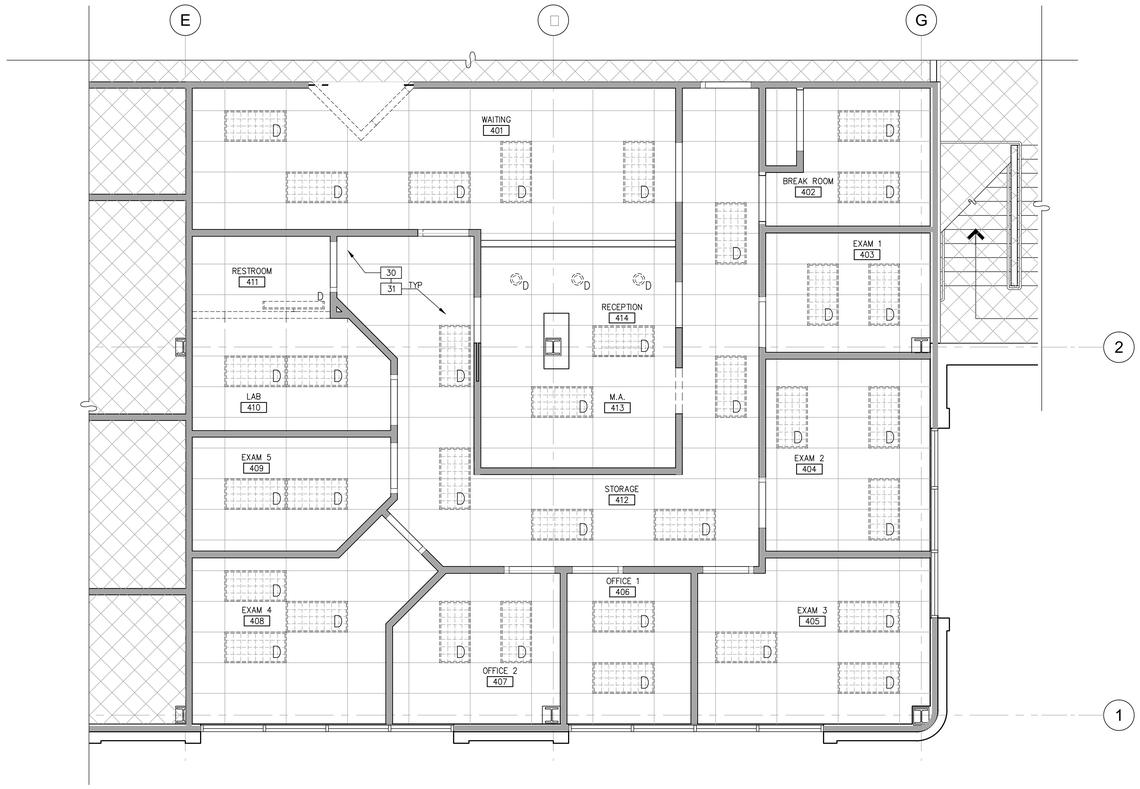

DEMOLITION CEILING PLAN

SCALE: 1/4"=1'-0"

2

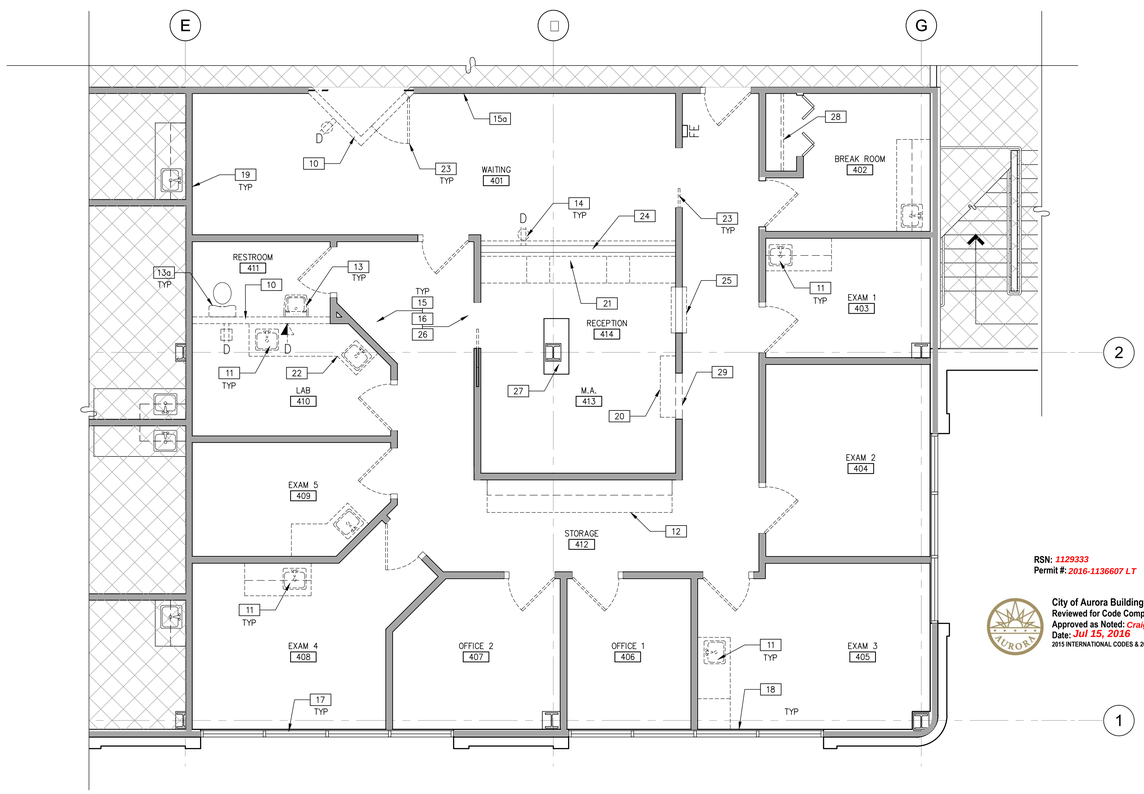

RSN: 1129333
Permit #: 2016-1136607 LT

City of Aurora Building Division
Reviewed for Code Compliance
Approved as Noted: Craig Macy
Date: Jul 15, 2016
2015 INTERNATIONAL CODES & 2014 NEC

1/4"=1'-0"

0 2' 4' 8' 16'

DEMOLITION FLOOR PLAN

SCALE: 1/4"=1'-0"

1 N

SEE SHEET A0.1 & A0.2 FOR GENERAL NOTES

DEMO FLOOR PLAN NOTES

10 REMOVE PARTITIONS AND RELATED ELECTRICAL OUTLETS AS INDICATED. TERMINATE ELECTRICAL LINES BACK TO POINT OF ORIGIN.

11 REMOVE MILLWORK & SINK. PREP AREA FOR NEW BUILDING STANDARD UPPER & LOWER MILLWORK WITH NEW SINK.

12 REMOVE EXISTING MILLWORK AND COUNTERTOP, PREP AREA FOR NEW BUILDING STANDARD UPPER & LOWER MILLWORK.

13 REMOVE PLUMBING FIXTURES AND PREP FOR NEW LAYOUT.

13a REMOVE GRAB BARS AND MIRROR AT RESTROOM. SAVE THEM FOR RELOCATION.

14 REMOVE POWER/SIGNAL OUTLETS AS SHOWN.

15 PREP ALL EXISTING PAINTED WALLS FOR NEW PAINT FINISH.

15a REMOVE WALLCOVERING ON THIS WALL. SKIM COAT AND PREPARE WALLS TO RECEIVE PAINTED FINISH.

16 REMOVE ALL FLOOR FINISHES THROUGHOUT. PREP FOR NEW FLOOR FINISHES PER FINISH PLAN.

17 EXISTING EXTERIOR WINDOW BLINDS TO REMAIN, UNLESS DAMAGED BEYOND REPAIR. CLEAN EXISTING BLINDS AS REQUIRED FOR "LIKE NEW" CONDITION. REPLACE ANY DAMAGED OR MISSING BLINDS TO MATCH EXISTING.

18 RECAULK AT ALL EXTERIOR GLASS

19 REMOVE EXISTING EXPOSED CONDUIT

20 REMOVE EXISTING MILLWORK AND COUNTERTOP. FINISH SURFACES TO "LIKE-NEW."

21 REMOVE EXISTING MILLWORK AND COUNTERTOP, PREP AREA FOR NEW BUILDING STANDARD LOWER MILLWORK/WORK SURFACE, AND RECEPTION TRANSACTION TOP.

22 REMOVE EXISTING MILLWORK. FINISH SURFACES TO "LIKE-NEW."

23 REMOVE ALL EXISTING DOORS AND FRAMES, PREP FOR NEW DOOR INSTALLATION. SAVE ALL DEMO'D DOORS FOR BUILDING STOCK.

24 REMOVE GLASS AND REPLACE TRANSACTION TOP WITH GRANITE COUNTERTOP.

25 REMOVE EXISTING TRANSACTION TOP, PREP FOR NEW TRANSACTION TOP.

26 REMOVE ALL EXISTING DEVICE COVERS IN SUITE, AND REPLACE WITH WHITE.

27 DEMO AND MOVE PIPES AS CLOSE TO COLUMN AS POSSIBLE AND RE-FRAME THE WALL TO BE TIGHT TO PIPES AND COLUMN.

28 REMOVE EXISTING MILLWORK, AND PREP FOR NEW UPPER MILLWORK.

29 DEMO 3' PORTION OF WALL, PREP FOR CASED OPENING.

DEMO CEILING PLAN NOTES

30 EXISTING CEILING GRID TO REMAIN THROUGHOUT, U.O.N. PATCH & REPAIR GRID AS REQUIRED. REMOVE ALL EXISTING CEILING TILES AND REPLACE WITH NEW ARMSTRONG DUNE 2x4 SECOND LOOK.

31 DEMO ALL EXISTING LIGHT FIXTURES THROUGHOUT. REPLACE WITH NEW 2x4 LED FIXTURES, U.O.N. SAVE ALL DEMO'D FIXTURES FOR POSSIBLE RELOCATION.

LEGENDS

INDICATES AREA NOT IN CONTRACT (N.I.C.)

WALL LEGEND

EXISTING CONSTRUCTION TO REMAIN

EXISTING CONSTRUCTION TO BE REMOVED

CEILING LEGEND

EXISTING 2'x4' SUSPENDED CEILING GRID TO REMAIN. REMOVE ALL CEILING TILES.

EXISTING 2'x4' FLUORESCENT LIGHT FIXTURE TO BE REMOVED – SAVE FOR RELOCATION OR BUILDING STOCK.

EXISTING CEILING-MOUNTED EXIT SIGN TO REMAIN

EXISTING WALL-MOUNTED 4' FLUORESCENT LIGHT FIXTURE TO BE REMOVED. SAVE FOR RELOCATION.

RECESSED CIRCULAR DOWNLIGHT TO REMAIN.

WARE MALCOMB
Leading Design for Commercial Real Estate

architecture
planning
interiors
graphics
civil engineering

1600 champa st.
suite 350
denver, colorado 80202
p 720.88.3626

STATE OF COLORADO
MATTHEW NATHAN OHAIKEN
306199
LICENSED ARCHITECT
12-14-15

SPEC SUITE
1411 S. POTOMAC ST, SUITE 440
AURORA, CO 80012

DEMOLITION FLOOR PLAN & DEMOLITION CEILING PLAN

DATE	REMARKS
1.06.15	ISSUE FOR BID
12.14.15	ISSUE FOR PERMIT
6.28.16	CLIENT REVISIONS

DATE	REMARKS

PA : PM:	E. ZABEL
DRAWN BY:	C.A.T.
JOB NO.:	DEN15-6178-00

SHEET
AD.1

THESE DRAWINGS AND SPECIFICATIONS ARE THE PROPERTY AND COPYRIGHT OF WARE MALCOMB AND SHALL NOT BE USED ON ANY OTHER WORK EXCEPT BY AGREEMENT WITH WARE MALCOMB. WRITTEN DIMENSIONS SHALL TAKE PRECEDENCE OVER SCALED DIMENSIONS AND SHALL BE VERIFIED ON THE JOB SITE. ANY DISCREPANCY SHALL BE BROUGHT TO THE NOTICE OF WARE MALCOMB PRIOR TO THE COMMENCEMENT OF ANY WORK.

T:\Jobs15\CB Richard Ellis - AuroraSouth Potomac\DEN15-6178-00_1411_Suite_440_Spec_Suite\Architectural\Cad\CD\6178_A01.dwg

Wed, 29 Jun 2016

CAUTION: IF THIS SHEET IS NOT 30"x42" IT IS A REDUCED PRINT

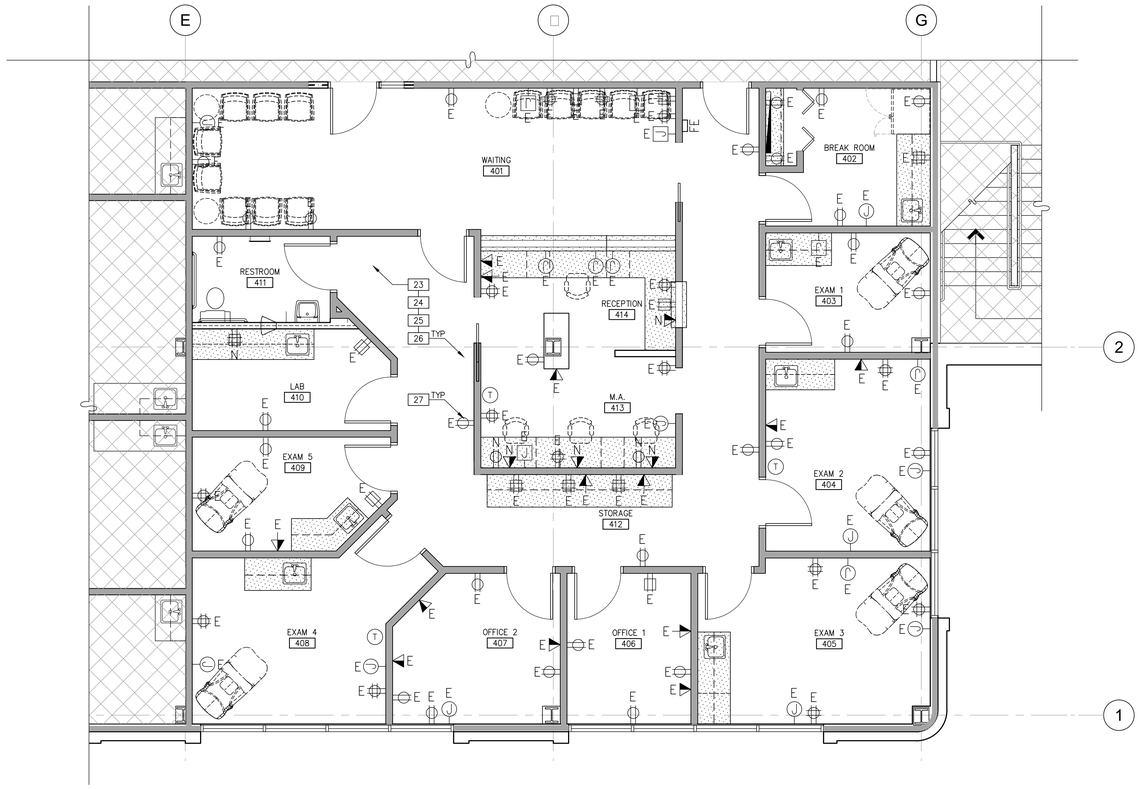

POWER AND SIGNAL PLAN (2)

SCALE: 1/4"=1'-0"

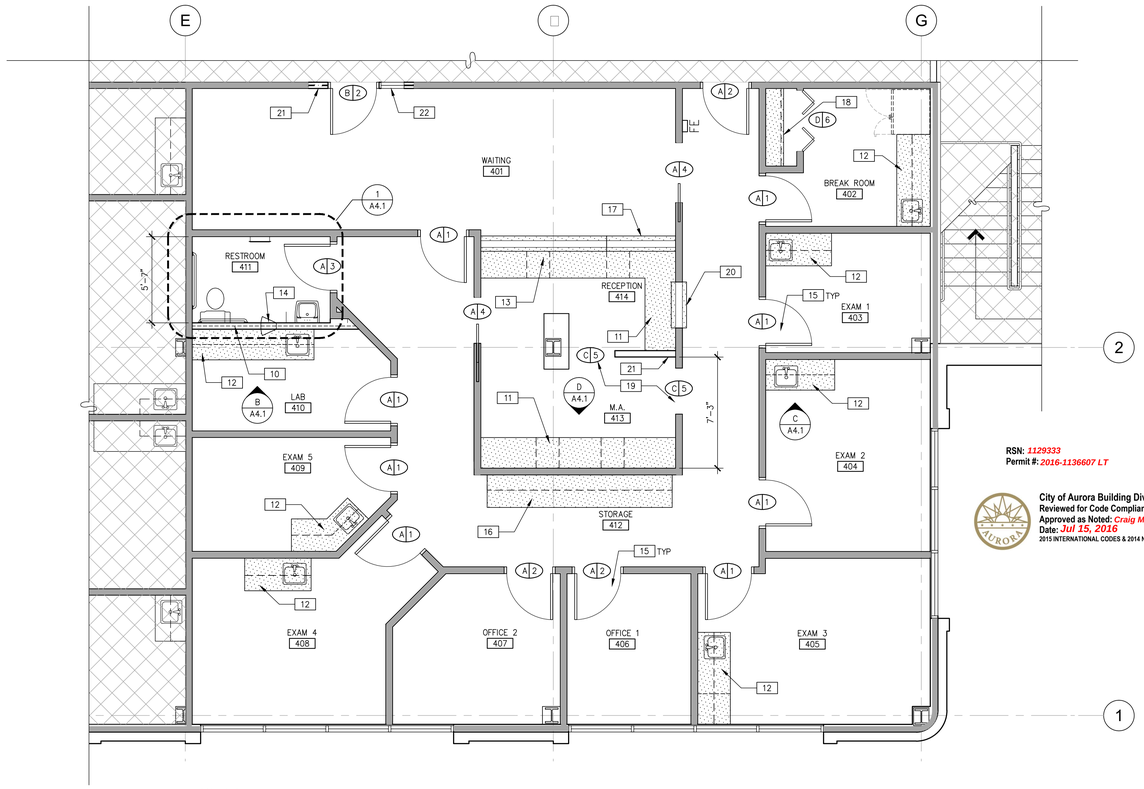

RSN: 1129333
Permit #: 2016-1136607 LT

City of Aurora Building Division
Reviewed for Code Compliance
Approved as Noted: Craig Macy
Date: Jul 15, 2016
2015 INTERNATIONAL CODES & 2014 NEC

1/4"=1'-0"
0 2' 4' 8' 16'

PARTITION PLAN (1)

SCALE: 1/4"=1'-0"

SEE SHEET A0.1 □ A0.2 □ OR GENERAL NOTES

PARTITION PLAN NOTES

10 THE NEW WALL OF THIS ROOM TO BE INSULATED WITH R-11, UNFACED FIBERGLASS INSULATION.

11 PROVIDE WORK SURFACE AT 30" A.F.F. AND BOX/BOX/FILE AT M.A. ONLY. SEE ELEVATIONS.

12 PROVIDE UPPER & LOWER CABINETRY WITH DRAWERS AND BACK SPLASH, AND NEW SINK/FAUCET TO MATCH PREVIOUS EXISTING.

13 PROVIDE NEW RECEPTION MILLWORK AND TRANSACTION TOP.

14 RELOCATE PASS-THRU.

15 PROVIDE NEW BUILDING STANDARD DOORS AND FRAMES THROUGHOUT.

16 PROVIDE NEW UPPER AND LOWER CABINETRY. SEE MILLWORK ELEVATIONS ON SHEET A4.1. (A4.1 / 3)

17 PROVIDE ADA ACCESSIBLE TRANSACTION TOP ON THIS END PORTION.

18 PROVIDE NEW SHELVING TO MATCH PREVIOUS EXISTING MILLWORK.

19 PROVIDE 3' WIDE CASED OPENING.

20 PROVIDE NEW GRANITE TRANSACTION TOP.

21 PROVIDE NEW PARTITIONS AS NOTED TO MATCH ADJACENT CONSTRUCTION.

22 PROVIDE NEW 18' SIDELITE.

POWER □ SIGNAL PLAN NOTES

23 ALL FURNITURE TO BE PROVIDED AND INSTALLED BY TENANT. VERIFY EXACT LOCATIONS WITH FURNITURE DEALER PRIOR TO INSTALLATION OF RELATED POWER & SIGNAL CONNECTIONS.

24 ALL FURNITURE TO BE PROVIDED AND INSTALLED BY FUTURE TENANT. HYPOTHETICAL LAYOUT ONLY.

25 VERIFY POWER REQUIREMENTS FOR USER PROVIDE EQUIPMENT PRIOR TO INSTALLATION OF RELATED POWER & SIGNAL CONNECTIONS.

26 SEE ELECTRICAL DRAWINGS FOR ANY ADDITIONAL POWER REQUIREMENTS.

27 EXISTING ELECTRICAL OUTLET TO REMAIN.

DOOR SCHEDULE

DOOR □ □RAME:

(X) SUITE STANDARD DOORS ARE AND SHALL BE 1-3/4" THICK x 3'-0" WIDE x 8'-0" HIGH, SOLID CORE WOOD, WHITE MAPLE VENEER, STAINED CLEAR, U.O.N.. ALL DOORS TO BE PRE-MACHINED FOR CYLINDRICAL HARDWARE AND FREE FROM DAMAGE AND IRREGULARITIES. FRAMES SHALL BE HOLLOW METAL PRIMED READY TO RECEIVE SEMI-GLOSS PAINT FINISH TO MATCH (RB-1). MANUFACTURER: EGGERS INDUSTRIES

A PROVIDE AND INSTALL NEW DOOR AND FRAME ASSEMBLY TO MATCH SUITE STANDARD LISTED ABOVE.

B PROVIDE AND INSTALL NEW DOOR AND FRAME ASSEMBLY WITH SIDELIGHT TO MATCH BUILDING STANDARD. SUITE ENTRY DOORS.

C PROVIDE 3' WIDE CASED OPENING.

D EXISTING DOOR AND HARDWARE TO REMAIN.

HARDWARE:

(X) DOOR HARDWARE SHALL BE AN ACCESSIBLE LEVER STYLE. HARDWARE TO BE FALCON, GRADE II "B" SERIES, "DANE" LATCHING HARDWARE. #626 SATIN CHROME FINISH".

1 PROVIDE AND INSTALL NEW PASSAGE SET AND HARDWARE SET TO MATCH SPECIFICATIONS LISTED ABOVE.

2 PROVIDE AND INSTALL NEW OFFICE/ENTRANCE FUNCTION LOCK SET HARDWARE SET AND WALL MOUNTED DOOR STOP TO MATCH SPECIFICATION LISTED ABOVE.

3 PROVIDE AND INSTALL PRIVACY LOCK SET AND HARDWARE SET TO MATCH SPECIFICATIONS LISTED ABOVE.

4 PROVIDE AND INSTALL NEW POCKET PASSAGE SET AND HARDWARE SET TO MATCH SPECIFICATIONS LISTED ABOVE.

5 CASED OPENING, NO HARDWARE NEEDED.

6 EXISTING HARDWARE TO REMAIN.

LEGENDS

INDICATES AREA NOT IN CONTRACT (N.I.C.)

WALL LEGEND

EXISTING CONSTRUCTION TO REMAIN

(2 / A5.1) PARTITION TO UNDERSIDE OF CEILING

(2 / A5.1) PARTITION TO 6" ABOVE CEILING

POWER □ SIGNAL LEGEND

EXISTING OUTLETS TO REMAIN U.N.O.

N NEW DUPLEX RECEPTACLE, MOUNTED VERTICALLY AT +18" A.F.F., U.O.N. "C" DESIGNATES RECESSED TYPE SOCKET.

N NEW DUPLEX RECEPTACLE, MOUNTED 6" ABOVE COUNTER OR SPLASH.

N NEW COMBINATION TELEPHONE/DATA OUTLET MUD RING, WALL-MOUNTED AT 18" A.F.F., U.O.N. PROVIDE PULL ROPE TO ABOVE ACCESSIBLE CEILING SPACE.

WARE MALCOMB
Leading Design for Commercial Real Estate

architecture
planning
interiors
graphics
civil engineering

1600 champa st.
suite 300
denver, colorado 80202
p 720.888.3626

STATE OF COLORADO
MATTHEW AND NATHAN OHAIKEN
306199
LICENSED ARCHITECT

12-14-15

SPEC SUITE
1411 S. POTOMAC ST, SUITE 440
AURORA, CO 80012

PARTITION PLAN AND POWER □ SIGNAL PLAN

DATE	REMARKS
1.06.15	ISSUE FOR BID
12.14.15	ISSUE FOR PERMIT
6.28.16	CLIENT REVISIONS

PA □PM:	E. ZABEL
DRAWN BY:	C.A.T.
JOB NO.:	DEN15-6178-00

SHEET
A2.1

Wed, 29 Jun 2016

THESE DRAWINGS AND SPECIFICATIONS ARE THE PROPERTY AND COPYRIGHT OF WARE MALCOMB AND SHALL NOT BE USED ON ANY OTHER WORK EXCEPT BY AGREEMENT WITH WARE MALCOMB. WRITTEN DIMENSIONS SHALL TAKE PRECEDENCE OVER SCALED DIMENSIONS AND SHALL BE VERIFIED ON THE JOB SITE. ANY DISCREPANCY SHALL BE BROUGHT TO THE NOTICE OF WARE MALCOMB PRIOR TO THE COMMENCEMENT OF ANY WORK.

T:\Jobs15\CB Richard Ellis - AuroraSouth Potomac\DEN15-6178-00_1411_Suite_440_Spec_Suite\Architectural\Coat\CD\6178_A21.dwg

CAUTION: IF THIS SHEET IS NOT 30"x42" IT IS A REDUCED PRINT

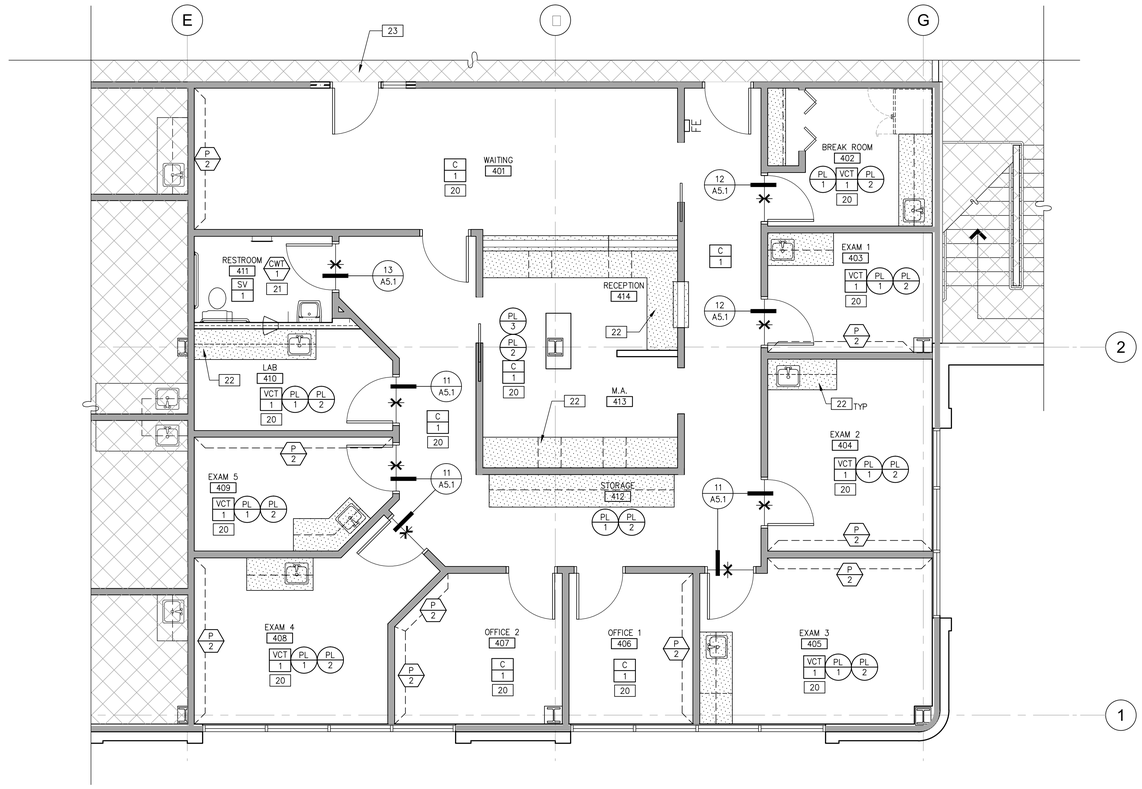

FINISH PLAN
SCALE: 1/4"=1'-0"
2

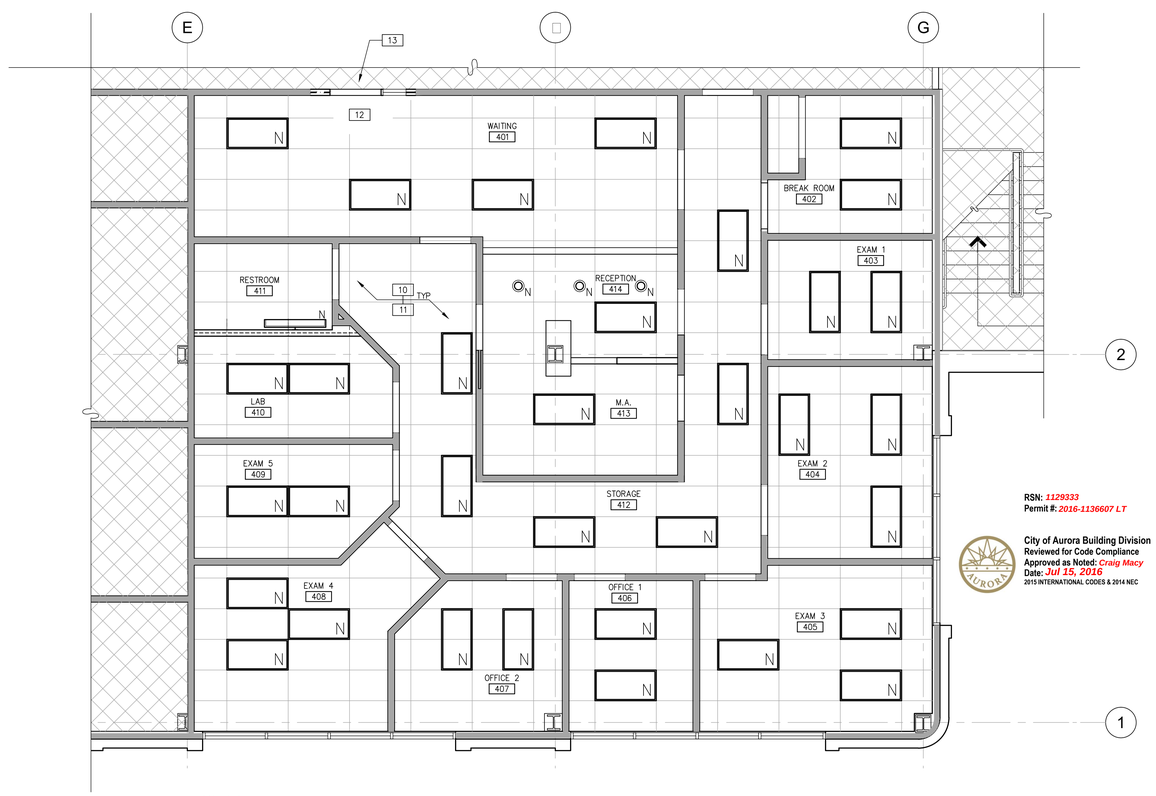

RSN: 1129333
Permit #: 2016-1136607 LT

City of Aurora Building Division
Reviewed for Code Compliance
Approved as Noted: Craig Macy
Date: Jul 15, 2016
2015 INTERNATIONAL CODES & 2014 NEC

1/4"=1'-0"
0 2' 4' 8' 16'

REFLECTED CEILING PLAN
SCALE: 1/4"=1'-0"
1

SEE SHEET A0.1 & A0.2 FOR GENERAL NOTES

REFLECTED CEILING NOTES

10 REPLACE ALL EXISTING LIGHTING IN THIS ROOM/AREA WITH NEW 2x4 LED FIXTURES, U.O.N.

11 REPLACE ALL EXISTING CEILING TILES IN THIS ROOM/AREA WITH NEW ARMSTRONG DUNE 2x4 SECOND LOOK.

12 PATCH CEILING GRID & PROVIDE NEW TILE.

13 PATCH CORRIDOR CEILING AS REQUIRED.

FINISH NOTES

20 ROOMS TO RECEIVE PAINT (P-1) AND RUBBER BASE (RB-1), U.O.N.

21 SEE ENLARGED RESTROOM ELEVATIONS ON SHEET A4.1 FOR WALL FINISHES.

22 SEE MILLWORK ELEVATIONS ON SHEET A4.1 FOR COUNTERTOP AND CABINETRY FINISHES.

23 PATCH CORRIDOR CARPET/WALL AS REQUIRED DUE TO NEW ENTRY.

LEGENDS

INDICATES AREA NOT IN CONTRACT (N.I.C.)

CEILING LEGEND

EXISTING SUSPENDED CEILING SYSTEM THROUGHOUT TO REMAIN. PREP FOR "LIKE-NEW." REPLACE ALL CEILING TILES WITH NEW ARMSTRONG DUNE 2x4 SECOND LOOK.

N NEW 2'x4' LED LIGHT FIXTURE

W EXISTING WALL-MOUNTED 4' WRAP-AROUND FLUORESCENT LIGHT FIXTURE TO REMAIN.

E EXISTING RECESSED CIRCULAR DOWNLIGHT.

SYMBOLS LEGEND

INDICATES LINE OF FLOOR TRANSITION

X INDICATES LOCATION OF NON-TYPICAL WALL FINISH

FINISH LEGEND

WALL FINISHES

P-1
ITEM: PAINT - TYPICAL THROUGHOUT, U.O.N.
MFR: SHERWIN WILLIAMS
COLOR/NO: WORLDLY GRAY SW7043
FINISH: EGGSHELL

P-2
ITEM: PAINT - ACCENT
MFR: SHERWIN WILLIAMS
COLOR/NO: STONEBRIAR SW7693
FINISH: EGGSHELL

FOR ADDITIONAL INFORMATION AND REQUIREMENTS REGARDING PAINT SEE www.waremalcomb.com/ws/09900-001.pdf

RB-1
ITEM: RUBBER BASE
MFR: JOHNSONITE
COLOR/NO: 48 GREY
SIZE: 4"
STYLE: STRAIGHT @ CARPET / COVED @ RESILIENT FLOORING

PWT-1
ITEM: PORCELAIN WALL TILE
MFR: DAL TILE
STYLE: FABRIQUE
COLOR/NO: CREME LINEN P686
SIZE: 6"X24"
GROUT: LATICRETE - 90 LIGHT PEWTER

FOR ADDITIONAL INFORMATION AND REQUIREMENTS REGARDING CERAMIC TILE SEE www.waremalcomb.com/ws/09310-001.pdf

FLOOR FINISHES

C-1
ITEM: CARPET - TYPICAL THROUGHOUT, U.O.N.
MFR: SHAW
STYLE: 5A205 SWITCH
COLOR/NO: 03530 GAZE
INSTALLATION: GLUE-DOWN

FOR ADDITIONAL INFORMATION AND REQUIREMENTS REGARDING CARPET SEE www.waremalcomb.com/ws/09680-001.pdf

VCT-1
ITEM: VINYL COMPOSITION TILE - FIELD TILE
MFR: ARMSTRONG
COLOR/NO: STANDARD EXCELON
SIZE: 51908 PEWTER

SV-1
ITEM: SHEET VINYL
MFR: PATCRAFT.
COLOR/NO: ORGANIC HUE - GRAVEL 530
NOTE: PROVIDE 6" HIGH CONTINUOUS FLASH COVE

FOR ADDITIONAL INFORMATION AND REQUIREMENTS REGARDING RESILIENT FLOOR COVERING SEE www.waremalcomb.com/ws/09650-001.pdf

MISCELLANEOUS FINISHES

PL-1
ITEM: PLASTIC LAMINATE - HORIZONTAL SURFACES, U.O.N.
MFR: FORMICA
COLOR/NO: ELEMENTAL CONCRETE

PL-2
ITEM: PLASTIC LAMINATE - VERTICAL SURFACES
MFR: WILSONART
COLOR/NO: LOWELL ASH

PL-3
ITEM: PLASTIC LAMINATE - HORIZONTAL SURFACES (RECEPTION & M.A.)
MFR: FORMICA
COLOR/NO: NEUTRAL WEFT

SSM-2
ITEM: SOLID SURFACE MATERIAL - TRANSACTION
MFR: CAMBRIA
COLOR/NO: WINDERMERE

WARE MALCOMB
Leading Design for Commercial Real Estate
architecture
planning
interiors
graphics
civil engineering
1600 champa st.
suite 300
denver, colorado 80202
p 720.888.3626

STATE OF COLORADO
MATTHEW JON NATHAN CHAIKEN
306199
LICENSED ARCHITECT
12-14-15

SPEC SUITE
1411 S. POTOMAC ST, SUITE 440
AURORA, CO 80012

RE-LECTED CEILING PLAN AND FINISH PLAN

DATE	REMARKS
1.06.15	ISSUE FOR BID
12.14.15	ISSUE FOR PERMIT
6.28.16	CLIENT REVISIONS

PA / PM:	E. ZABEL
DRAWN BY:	C.A.T.
JOB NO.:	DEN15-6178-00

SHEET
A-1.1

Wed, 29 Jun 2016

THESE DRAWINGS AND SPECIFICATIONS ARE THE PROPERTY AND COPYRIGHT OF WARE MALCOMB AND SHALL NOT BE USED ON ANY OTHER WORK EXCEPT BY AGREEMENT WITH WARE MALCOMB. WRITTEN DIMENSIONS SHALL TAKE PRECEDENCE OVER SCALED DIMENSIONS AND SHALL BE VERIFIED ON THE JOB SITE. ANY DISCREPANCY SHALL BE BROUGHT TO THE NOTICE OF WARE MALCOMB PRIOR TO THE COMMENCEMENT OF ANY WORK.

T:\Jobs15\CB Richard Ellis - AuroraSouth Potomac\DEN15-6178-00_1411_Suite_440_Spec_Suite\Architectural\Cad\CD\6178_A31.dwg

CAUTION: IF THIS SHEET IS NOT 30"x42" IT IS A REDUCED PRINT

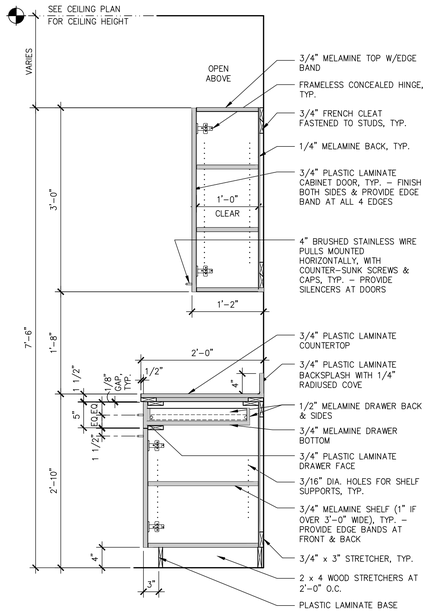

UPPER/LOWER CABINETS

SCALE: 1"=1'-0" IMWCB-Up_low_drws_splash-04

MILLWORK/CABINETRY NOTES:

SEE SHEET A0.1/A0.2/OR GENERAL NOTES

FOR ADDITIONAL INFORMATION AND REQUIREMENTS REGARDING INTERIOR ARCHITECTURAL WOODWORK SEE www.waremalcomb.com/ws/06402-001.pdf

1. ALL MILLWORK SHALL CONFIRM TO THE CURRENT WOODWORK INSTITUTE STANDARDS [CUSTOM GRADE / PREMIUM GRADE]. ALL CABINETRY SHALL CONFORM TO THE CURRENT WOODWORK INSTITUTE STANDARDS [CUSTOM GRADE / PREMIUM GRADE].
2. SHOP DRAWINGS FOR ALL CABINETRY AND MILLWORK ARE REQUIRED TO BE SUBMITTED TO ARCHITECT AND OWNER FOR APPROVAL PRIOR TO FABRICATION AND INSTALLATION.
3. ALL NOTES AND DETAILS FOR DETAIL 3/– ARE TYPICAL FOR THIS ENTIRE PAGE OF DETAILS, UNLESS OTHERWISE NOTED.
4. SEE ELEVATIONS FOR EXTERIOR FINISHES SPECIFICATIONS.
5. DOOR PULLS SHALL BE: 4" SATIN CHROMIUM WIRE PULLS.
6. COUNTERTOPS SHALL HAVE BACK-SPLASHES ONLY WHERE SHOWN ON ELEVATION.
7. CABINET INTERIORS SHALL BE WHITE MELAMINE, INCLUDING EDGES.
8. INTERIOR SHELVING SHALL BE COVERED IN WHITE MELAMINE.
9. DOORS SHALL BE OF FLUSH OVERLAY CONSTRUCTION.
10. DOORS EDGES SHALL BE EDGE BANDED TO MATCH THE FRONTS.
11. INTERIOR OF DOOR SHALL BE FACED WITH SAME MATERIAL AS THE FRONTS.
12. EACH CABINET DOOR TO BE NO LESS THAN 12" WIDE AND NO GREATER THAN 18" WIDE U.O.N.
13. (*) VERIFY ALL EQUIPMENT CLEARANCES.

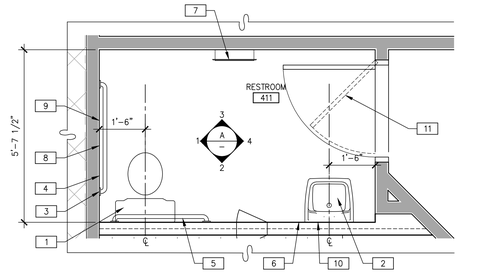

ENLARGED RESTROOM PLAN

SCALE: 1/2"=1'-0" (1)

SEE SHEET A0.1/A0.2/OR GENERAL NOTES

SEE SHEET A0.0/OR RESTROOM ACCESSIBILITY NOTES/DETAILS

RESTROOM NOTES

1. WATER CLOSET – FULLY ACCESSIBLE, FLOOR-MOUNTED, TANK TYPE. INSTALL AT ACCESSIBLE HEIGHT. (SEE PLUMBING DRAWINGS FOR SPECIFICATIONS)
2. LAVATORY – FULLY ACCESSIBLE, WALL-HUNG, SELF-RIMMING, PORCELAIN SINK WITH WRIST BLADE FAUCET CONTROLS. (SEE PLUMBING DRAWINGS FOR SPECIFICATIONS)
3. REUSE 42" GRAB BAR – TOILET COMPARTMENT SIDE GRAB BAR.
4. 18" GRAB BAR – TOILET COMPARTMENT VERTICAL SIDE GRAB BAR – BOBRICK B-6806x18, 18L" X 1-1/2" DIAMETER GRAB-BAR WITH – BOBRICK B-2583 CONCEALED ANCHOR PLATES.
5. REUSE 36" GRAB BAR – TOILET COMPARTMENT REAR GRAB BAR.
6. SOAP DISPENSER – WALL-MOUNTED – BOBRICK B-2112 (OR EQUAL).
7. PAPER TOWEL DISPENSER, SURFACE MOUNTED – BOBRICK B-262 (OR EQUAL)
8. DOUBLE-ROLL TOILET TISSUE DISPENSER – SURFACE-MOUNTED, BOBRICK B-2740.
9. SANITARY NAPKIN DISPOSAL – SURFACE-MOUNTED, BOBRICK B-254.
10. REUSE MIRROR AT SINK.
11. ADA UNISEX WALL-MOUNTED SIGNAGE. SEE DETAIL 14 ON SHEET A0.3.

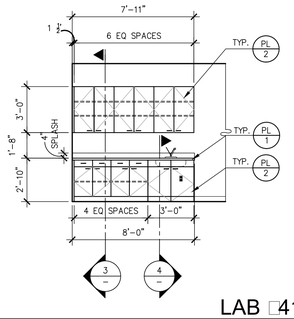

LAB 410

SCALE: 1/4"=1'-0" (B)

NOTE: ALL DIMENSIONS & CALLOUTS TYPICAL FOR EACH ROOM, U.O.N.

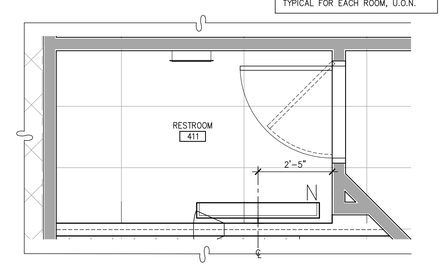

ENLARGED RR CEILING PLAN

SCALE: 1/2"=1'-0" (2)

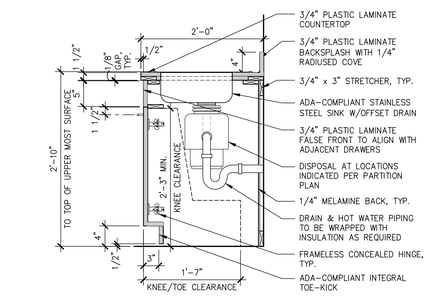

LOWER CABINET AT SINK

SCALE: 1"=1'-0" IMWCB-Low_sink_splash-01 (4)

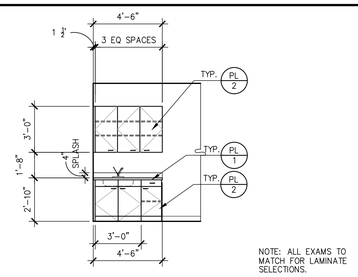

NOTE: ALL EXAMS TO MATCH FOR LAMINATE SELECTIONS.

EXAM 2 404

SCALE: 1/4"=1'-0" (C)

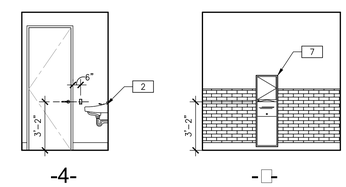

-4- -/-

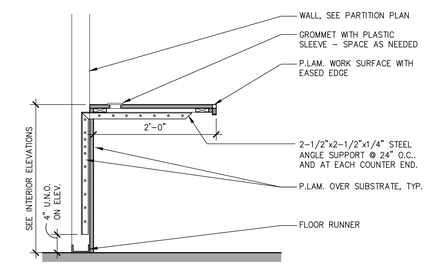

COUNTERTOP SUPPORT

SCALE: 1"=1'-0" IMWMI_Counter-01

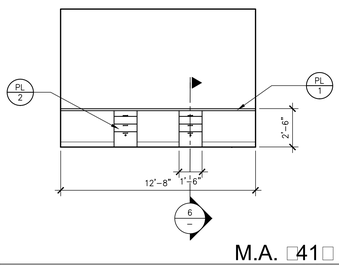

M.A. 41

SCALE: 1/4"=1'-0" (D)

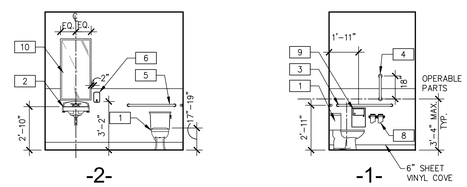

-2- -1-

RESTROOM ELEVATIONS

SCALE: 1/4"=1'-0" (A)

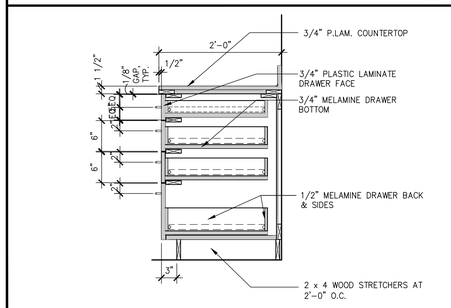

LOWER CABINETS WITH DRAWERS

SCALE: 1"=1'-0" IMWCB-Low_drws_splash-04 (6)

RSN: *1129333*
Permit #: *2016-1136607 LT*

This sheet of drawings has not been reviewed for code compliance.

WARE MALCOMB
Leading Design for Commercial Real Estate

architecture
planning
interiors
graphics
civil engineering

1600 champa st.
suite 300
denver, colorado 80202
p 720.888.3626

STATE OF COLORADO
MATTHEW NATHAN CHAIKEN
306199
LICENSED ARCHITECT

12-14-15

SPEC SUITE
1411 S. POTOMAC ST, SUITE 440
AURORA, CO 80012

ENLRGD RR PLAN ELEVATIONS AND MILLWORK ELEVATIONS DETLS

DATE	REMARKS
11.06.15	ISSUE FOR BID
12.14.15	ISSUE FOR PERMIT
6.28.16	CLIENT REVISIONS

PA/PM:	E. ZABEL
DRAWN BY:	C.A.T
JOB NO.:	DEN15-6178-00

SHEET
A4.1

THESE DRAWINGS AND SPECIFICATIONS ARE THE PROPERTY AND COPYRIGHT OF WARE MALCOMB AND SHALL NOT BE USED ON ANY OTHER WORK EXCEPT BY AGREEMENT WITH WARE MALCOMB. WRITTEN DIMENSIONS SHALL TAKE PRECEDENCE OVER SCALED DIMENSIONS AND SHALL BE VERIFIED ON THE JOB SITE. ANY DISCREPANCY SHALL BE BROUGHT TO THE NOTICE OF WARE MALCOMB PRIOR TO THE COMMENCEMENT OF ANY WORK.

T:\Jobs15\CB Richard Ellis – AuroraSouth Potomac\DEN15-6178-00_1411_Suite_440_Spec_Suite\Architectural\Cad\CD\6178_A41\6178_A41.dwg

Wed, 29 jun 2016

CAUTION: IF THIS SHEET IS NOT 30"x42" IT IS A REDUCED PRINT

21

16

11

22

1□

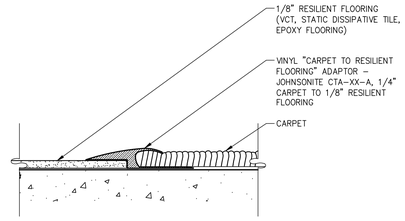

CARPET TO RESILIENT □LOORING 12

SCALE: FULL — IFLTR–Carpet_resilient_floor_01

MEMBER DEPTH:

(EXAMPLE: 6" = 600 X 1/100 INCHES) ALL MEMEBER DEPTHS ARE TAKEN IN 1/100 INCHES. FOR ALL "T" SECTIONS MEMBER DEPTH IS THE INSIDE DIMENSION.

STYLE:

(EXAMPLE: STUD OR JOIST SECTION = S.) THE FOUR ALPHA CHARACTERS UTILIZED BY THE DESIGNATOR SYSTEM ARE:

S = STUD OR JOIST, T = TRACK, U = CHANNEL, □ = FURRING

□LANGE WIDTH:

(EXAMPLE: 1 5/8" = 1.625" ~ 162 X 1/100 INCHES) ALL FLANGE WIDTHS ARE TAKEN IN 1/100 INCHES.

600 S 162 - 4

MATERIAL THICKNESS:

(EXAMPLE: 0.054 IN. = 4 MILS; 1 MIL = 1/1000 IN.) MATERIAL THICKNESS IS THE MINIMUM BASE METAL THICKNESS IN MILS. MINIMUM BASE METAL THICKNESS REPRESENTS 95% OF THE DESIGN THICKNESS.

INTERIOR NON-STRUCTURAL NON-COMPOSITE:

USE FOR FURRING PURPOSES ONLY, U.O.N.

□S□ STUD MEMBER	SPACING IN□O.C.	□PS□ L/240
250S137–33	12"	13'–10"
250S137–33	16"	12'–2"
250S137–33	24"	11'–0"
250S137–43	12"	15'–0"
250S137–43	16"	13'–8"
250S137–43	24"	11'–11"
250S137–54 (50 KSI)	12"	16'–1"
250S137–54 (50 KSI)	16"	14'–7"
250S137–54 (50 KSI)	24"	12'–9"
362S137–33	12"	18'–5"
362S137–33	16"	16'–9"
362S137–33	24"	14'–7"
362S137–43	12"	20'–0"
362S137–43	16"	18'–2"
362S137–43	24"	15'–11"
362S137–54 (50 KSI)	12"	21'–5"
362S137–54 (50 KSI)	16"	19'–6"
362S137–54 (50 KSI)	24"	17'–0"
362S137–68 (50 KSI)	12"	22'–11"
362S137–68 (50 KSI)	16"	20'–10"
362S137–68 (50 KSI)	24"	18'–2"
362S137–97 (50 KSI)	12"	25'–3"
362S137–97 (50 KSI)	16"	22'–11"
362S137–97 (50 KSI)	24"	20'–0"
400S137–33	12"	19'–11"
400S137–33	16"	18'–1"
400S137–33	24"	15'–9"
400S137–43	12"	21'–8"
400S137–43	16"	19'–8"
400S137–43	24"	17'–2"

□S□ STUD MEMBER	SPACING IN□O.C.	□PS□ L/240
400S137–54 (50 KSI)	12"	23'–2"
400S137–54 (50 KSI)	16"	21'–1"
400S137–54 (50 KSI)	24"	18'–5"
400S137–68 (50 KSI)	12"	24'–9"
400S137–68 (50 KSI)	16"	22'–6"
400S137–68 (50 KSI)	24"	19'–8"
400S137–97 (50 KSI)	12"	27'–3"
400S137–97 (50 KSI)	16"	24'–9"
400S137–97 (50 KSI)	24"	21'–8"
600S137–33	12"	27'–3"
600S137–33	16"	24'–9"
600S137–33	24"	21'–8"
600S137–43	12"	29'–10"
600S137–43	16"	27'–2"
600S137–43	24"	23'–8"
600S137–54 (50 KSI)	12"	32'–0"
600S137–54 (50 KSI)	16"	29'–1"
600S137–54 (50 KSI)	24"	25'–5"
600S137–68 (50 KSI)	12"	34'–4"
600S137–68 (50 KSI)	16"	31'–2"
600S137–68 (50 KSI)	24"	27'–3"
600S137–97 (50 KSI)	12"	38'–0"
600S137–97 (50 KSI)	16"	34'–6"
600S137–97 (50 KSI)	24"	30'–2"
800S137–43	12"	37'–6"
800S137–43	16"	34'–1"
800S137–43	24"	29'–9"
800S137–54 (50 KSI)	12"	40'–4"
800S137–54 (50 KSI)	16"	36'–8"
800S137–54 (50 KSI)	24"	32'–0"
800S137–68 (50 KSI)	12"	43'–6"
800S137–68 (50 KSI)	16"	39'–6"
800S137–68 (50 KSI)	24"	34'–6"

NOTE: ALL STUD INFORMATION IS BASED ON: CEMCO ICC ES ESR–3016

LIMITING WALL HEIGHT TABLE-L□240

SCALE: NONE — IWAMT–Height_table–L_240–CEMCO

NOTES FOR ALL WALLS:

- SEE METAL STUD CHART FOR GAUGE.
- SEE FLOOR/PARTITION PLAN AND/OR GENERAL NOTES SHEET FOR ANY REQUIRED INSULATION.
- ALL WALL STUDS TO BE 3–5/8", U.O.N.
- ALL RESTROOM WALL STUDS TO BE 6" AND FULLY INSULATED, U.O.N.

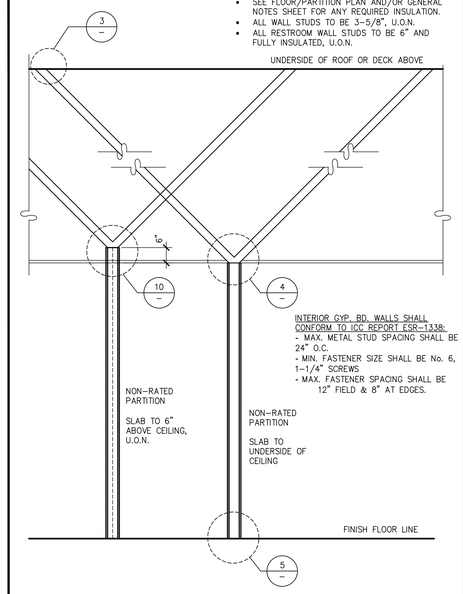

WALL TYPE SCHEDULE 2

SCALE: 1/2"=1'–0" — IWAMT–Wall_type_schedule–01

2□

18

1□

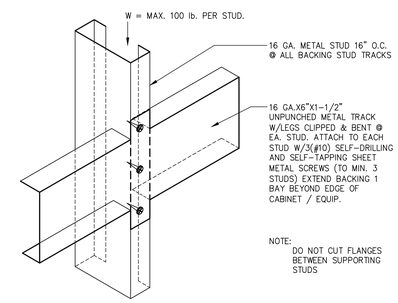

BACKING DETAIL □OR MISC. E□UIP. 8

SCALE: N.T.S. — IWAMI–Wall_equip_backing–01

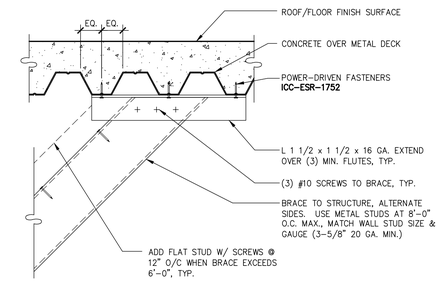

WALL SWAY BRACE

SCALE: 3"=1'–0" — IWAMT–Dia_brc_hd_md–01

24

1□

14

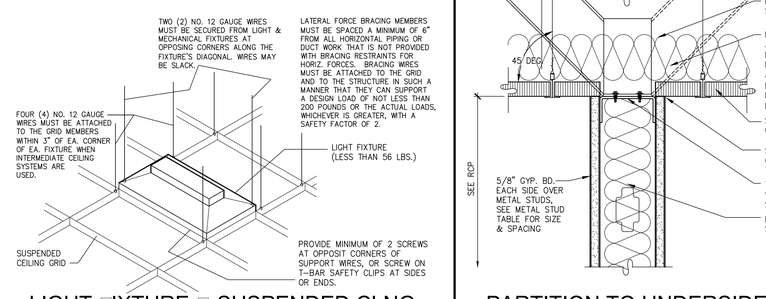

LIGHT □IXTURE □ SUSPENDED CLNG. 14

SCALE: N.T.S. — ICEAC–Susp_light_intermediate–01

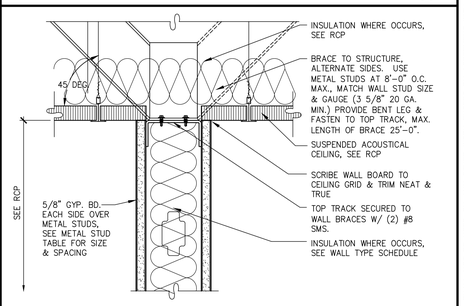

PARTITION TO UNDERSIDE O□ CLG. 4

SCALE: 3"=1'–0" — IWAMT–Uc_hd_dia_brc_ct–01

2□

20

1□

RSN: *1129333*
Permit #: *2016-1136607 LT*

This sheet of drawings has not been reviewed for code compliance.

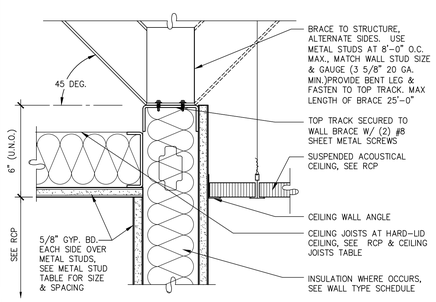

PARTITION TO 6" ABO□E CEILING 10

SCALE: 3"= 1'–0" — IWAMT–6ac_hd_dia_brc_ct_hl–01

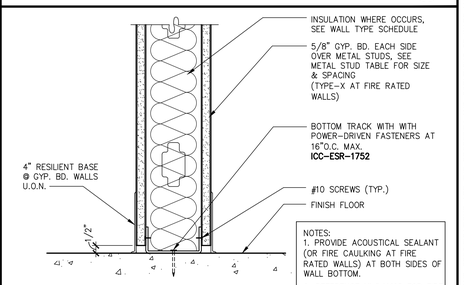

NOTES:
1. PROVIDE ACOUSTICAL SEALANT (OR FIRE CAULKING AT FIRE RATED WALLS) AT BOTH SIDES OF WALL BOTTOM.
2. REFERENCE **UL# U419** FOR FIRE RATED WALL ASSEMBLIES.

WALL BASE

SCALE: 3"=1'–0" — IWAMT–Base_typ–01

T:\Jobs15\CB Richard Ellis – AuroraSouth Potomac\DEN15–6178–00_1411_Suite_440_Spec_Suite\Architectural\Cad\CD\6178_A51\6178_A51.dwg

THESE DRAWINGS AND SPECIFICATIONS ARE THE PROPERTY AND COPYRIGHT OF WARE MALCOMB AND SHALL NOT BE USED ON ANY OTHER WORK EXCEPT BY AGREEMENT WITH WARE MALCOMB. WRITTEN DIMENSIONS SHALL TAKE PRECEDENCE OVER SCALED DIMENSIONS AND SHALL BE VERIFIED ON THE JOB SITE. ANY DISCREPANCY SHALL BE BROUGHT TO THE NOTICE OF WARE MALCOMB PRIOR TO THE COMMENCEMENT OF ANY WORK.

WARE MALCOMB
Leading Design for Commercial Real Estate

architecture
planning
interiors
graphics
civil engineering

1600 champa st.
suite 300
denver, colorado 80202
p 720.898.3626

STATE OF COLORADO
MATTHEW NATHAN CHAIKEN
306199
LICENSED ARCHITECT
12–14–15

SPEC SUITE
1411 S. POTOMAC ST, SUITE 440
AURORA, CO 80012

DETAILS

DATE	REMARKS
1.06.15	ISSUE FOR BID
12.14.15	ISSUE FOR PERMIT
6.28.16	CLIENT REVISIONS

PA□PM:	E. ZABEL
DRAWN BY:	C.A.T.
JOB NO.:	DEN15–6178–00

SHEET
A□.1

Wed, 29 Jun 2016

CAUTION: IF THIS SHEET IS NOT 30"x42" IT IS A REDUCED PRINT

MECHANICAL SPECIFICATIONS

SUPPLY AND RETURN AIR DUCTWORK SHALL BE CONSTRUCTED OF GALVANIZED STEEL PER SMACNA DUCT CONSTRUCTION STANDARDS. RETURN AIR DUCTWORK AND SUPPLY AIR DUCTWORK SHALL BE CONSTRUCTED FOR 1" W.C. STATIC PRESSURE DOWNSTREAM OF VAV BOXES/FAN COILS AND 3" W.C. UPSTREAM OF VAV BOXES. SPIRAL LOCK-FORMED ROUND DUCT MAY BE UTILIZED WHERE SPACE ALLOWS. TRANSVERSE JOINTS AND LONGITUDINAL SEAMS SHALL BE SEALED AIR-TIGHT WITH MASTIC. RADIUSED ELBOWS (R/D=1.5) OR MITERED ELBOWS WITH SINGLE THICKNESS TURNING VANES SHALL BE UTILIZED. TURNING VANES SHALL BE SUPPORTED AT INTERVALS OF 36" MAXIMUM. TURNING VANE RUNNERS SHALL HAVE A VANE IN EVERY SLOT AND SHALL CONFORM TO SMACNA DUCT CONSTRUCTION STANDARDS FOR STANDARD SPACING.

INSULATED, FACTORY FABRICATED, FLEXIBLE DUCTWORK MAY BE UTILIZED AT RUNOUTS TO AIR DIFFUSERS. FLEXIBLE DUCTWORK SHALL CONSIST OF AN EXTERIOR REINFORCED LAMINATED VAPOR BARRIER, 1.5" FIBERGLASS INSULATION AND INTERIOR VINYL LINER WITH SPRING STEEL WIRE HELIX. FIBERGLASS INSULATION SHALL HAVE A MAXIMUM CONDUCTIVITY, K-VALUE, OF 0.25 AT 75°F. VINYL LINER SHALL NOT BE PERFORATED. FLEXIBLE DUCT ASSEMBLY SHALL HAVE A FLAME SPREAD/SMOKE DEVELOPED RATING OF 25/50 OR LESS. FLEXIBLE DUCT TO FLEXIBLE DUCT CONNECTIONS SHALL BE MADE WITH FACTORY FABRICATED STEEL COLLARS. FLEXIBLE DUCT SHALL BE SECURED TO RIGID DUCTWORK AND AIR DEVICES WITH SCREWS AND DRAWBANDS. LENGTH OF FLEXIBLE DUCTWORK SHALL BE LIMITED TO 5' AND SHALL NOT BE COMPRESSED. FLEXIBLE DUCTWORK SHALL NOT BE USED FOR ELBOWS. FLEXIBLE DUCT SHALL NOT BE USED ABOVE INACCESSIBLE CEILINGS. FLEXIBLE DUCT SHALL NOT PASS THROUGH WALLS.

DUCT HANGERS SHALL BE CONSTRUCTED OF GALVANIZED STEEL. DUCTS SHALL BE SUPPORTED AND CONNECTED TO THE STRUCTURE PER SMACNA DUCT CONSTRUCTION STANDARDS. HANGERS AND SUPPORTS FOR GREASE DUCT SHALL BE OF NONCOMBUSTIBLE MATERIALS. FLEXIBLE DUCTS SHALL BE SUPPORTED WITH GALVANIZED STRAPS.

MANUAL VOLUME DAMPERS SHALL BE FURNISHED AND INSTALLED WHERE INDICATED AT SUPPLY AIR DUCT RUNOUTS TO AIR DIFFUSERS AND GRILLES AS NEAR AS POSSIBLE TO THE TRUNK DUCT. MANUAL VOLUME DAMPERS FOR RECTANGULAR DUCT SHALL BE CONSTRUCTED OF 16 GAUGE GALVANIZED STEEL AND BE THE OPPOSED BLADE TYPE. MANUAL VOLUME DAMPERS FOR ROUND DUCT SHALL BE CONSTRUCTED OF 16 GAUGE GALVANIZED STEEL AND BE THE SINGLE BLADE TYPE. DAMPER BEARINGS SHALL BE NYLON. STAND-OFFS TO OUTSIDE OF INSULATION SHALL BE PROVIDED FOR MANUAL VOLUME DAMPERS IN INSULATED DUCT. LOCKING AND INDICATING QUADRANTS SHALL BE PROVIDED WHERE DAMPER IS ACCESSIBLE.

GENERAL NOTES

1. ALL WORK SHALL BE INSTALLED IN ACCORDANCE WITH ALL APPLICABLE STATE CODES, LOCAL CODES, AND OWNER'S STANDARDS INDICATED BY THE CONSTRUCTION DOCUMENTS.
2. MECHANICAL DRAWINGS ARE DIAGRAMMATIC AND DO NOT NECESSARILY INDICATE EVERY REQUIRED OFFSET, FITTING, ETC. DRAWINGS ARE NOT TO BE SCALED FOR DIMENSIONS. TAKE ALL DIMENSIONS FROM ARCHITECTURAL DRAWINGS, CERTIFIED EQUIPMENT DRAWINGS AND FROM THE STRUCTURE ITSELF BEFORE FABRICATING ANY WORK, VERIFY ALL SPACE REQUIREMENTS COORDINATING WITH OTHER TRADES, AND INSTALL THE SYSTEMS IN THE SPACE PROVIDED WITHOUT EXTRA CHARGES TO THE OWNER.
3. CONTRACTOR SHALL COORDINATE WORK INDICATED WITH ELECTRICAL, STRUCTURAL, AND ARCHITECTURAL DIVISIONS. VERIFY FIT OF MECHANICAL SYSTEMS PRIOR TO FABRICATION.
4. PROVIDE ALL EQUIPMENT SCHEDULED OR INDICATED ON THE DRAWINGS BUT NOT INCLUDED WITHIN THE SPECIFICATIONS INCLUDING ANY REQUIRED BUT NOT LISTED MISC. ITEMS NEEDED TO PROVIDE COMPLETELY OPERATIONAL SYSTEMS AS INDICATED WHETHER SPECIFICALLY CALLED FOR OR NOT. INSTALLATION SHALL CONFORM TO MANUFACTURERS RECOMMENDATIONS AND APPLICABLE CODES. PROVIDE SUBMITTALS FOR ALL PROPOSED EQUIPMENT AND MATERIALS TO BE UTILIZED. .
5. ITEM DESIGNATIONS INDICATED HEREON ARE FOR PURPOSES OF THESE DOCUMENTS ONLY. CONTRACTOR SHALL VERIFY WITH OWNERS REPRESENTATIVE ACTUAL "TAGGING" INFORMATION TO BE PROVIDED FOR EACH ITEM OF MECHANICAL EQUIPMENT PRIOR TO NAMEPLATE ORDER RELEASE.
7. DUCT SIZES INDICATED ARE OUTSIDE DIMENSIONS, BRANCH RUN-OUT DUCTS TO DIFFUSERS AND GRILLES TO BE SAME SIZE AS DIFFUSER OR GRILLE CONNECTION SIZE UNLESS OTHERWISE NOTED.
8. LENGTH OF FLEXIBLE DUCTWORK SHALL BE LIMITED TO 5'-0" MAX. HORIZONTAL RUN WITH ONLY ONE 90° ELBOW PERMITTED. SECURE FLEXIBLE DUCTWORK WITH SCREWS & DRAWBANDS PER SMACNA STANDARDS.
9. REFER TO ARCHITECTURAL REFLECTED CEILING PLANS FOR ACTUAL LOCATION OF GRILLES, DIFFUSERS, AND ACCESS DOORS IN CEILING. SECURE DIFFUSERS & GRILLES TO T-BAR CEILINGS WHERE APPLICABLE. SUBMIT SHOP DWG. FOR APPROVAL PRIOR TO BEGINNING WORK.
10. AT THE COMPLETION OF WORK, PROVIDE TESTING AND BALANCING SERVICES FOR MECHANICAL SYSTEM. SUBMIT WRITTEN REPORT TO ARCHITECT LISTING SYSTEM AIRFLOWS, ELECTRIC DATA, TEMPERATURES, AND PRESSURE DROPS.
11. AT THE COMPLETION OF THE WORK AND PRIOR TO FINAL ACCEPTANCE, ALL PARTS OF THE WORK INSTALLED UNDER THIS SPECIFICATION SHALL BE THOROUGHLY CLEANED.
12. ALL EQUIPMENT, MATERIALS, AND INSTALLATION IS TO BE WARRANTEED FOR ONE YEAR TO BE FREE FROM DEFECT. PROVIDE WRITTEN WARRANTY TO OWNER.
13. THE OWNER AND ENGINEER ARE NOT RESPONSIBLE FOR THE CONTRACTOR'S SAFETY PRECAUTIONS OR TO MEANS, METHODS, TECHNIQUES, CONSTRUCTION SEQUENCES, OR PROCEDURES REQUIRED TO PERFORM HIS WORK.
14. THIS CONTRACTOR SHALL FIELD VERIFY LOCATIONS AND SIZES OF ALL EXISTING EQUIPMENT, DUCTWORK, PIPING, ELECTRICAL CONDUIT, STRUCTURAL MEMBERS, ETC., PRIOR TO STARTING OF CONSTRUCTION. COORDINATE CONFLICTS WITH THE GENERAL CONTRACTOR.
15. THIS CONTRACTOR SHALL COORDINATE ALL REQUIRED EXISTING BUILDING SERVICE SYSTEM OUTAGES WITH BUILDING MANAGEMENT.
16. ALL MECHANICAL SYSTEMS ARE REQUIRED TO BE INSTALLED PER BASE BUILDING REQUIREMENTS, LOCAL AND STATE JURISDICTIONAL CODES, ORDINANCES, AND APPLICABLE REGULATIONS.
17. PATCH AND REPAIR TO MATCH EXISTING, ANY WALL/CEILINGS TO BE ACCESSED TO ROUTE PIPING AND DUCTWORK.
18. EXISTING DUCTWORK, PIPING, AND EQUIPMENT TO REMAIN IS SHOWN LIGHT. NEW DUCTWORK, PIPING, AND EQUIPMENT IS SHOWN HEAVY. EXISTING DUCTWORK, PIPING, AND EQUIPMENT TO BE REMOVED IS SHOWN WITH X OVER ITEM.

MECHANICAL SHEET INDEX

| ISSUE | | |

CAUTION: IF THIS SHEET IS NOT 30"x42" IT IS A REDUCED PRINT

NOTES

1. EXISTING SUPPLY DIFFUSER TO REMAIN. (TYPICAL)
2. REMOVE EXISTING SUPPLY DIFFUSER AND ASSOCIATED DUCT. CAP TAP AT MAIN AND SEAL AIRTIGHT. RETAIN DIFFUSER TO BE REINSTALLED DURING NEW CONSTRUCTION PHASE OF JOB.
3. EXISTING RETURN GRILLE TO REMAIN. (TYPICAL)
4. EXISTING TEMPERATURE SENSOR TO REMAIN.
5. EXISTING FAN TERMINAL TO REMAIN.
6. EXISTING VAV BOX TO REMAIN.
7. EXISTING TRANSFER OPENING ABOVE CEILING TO REMAIN.

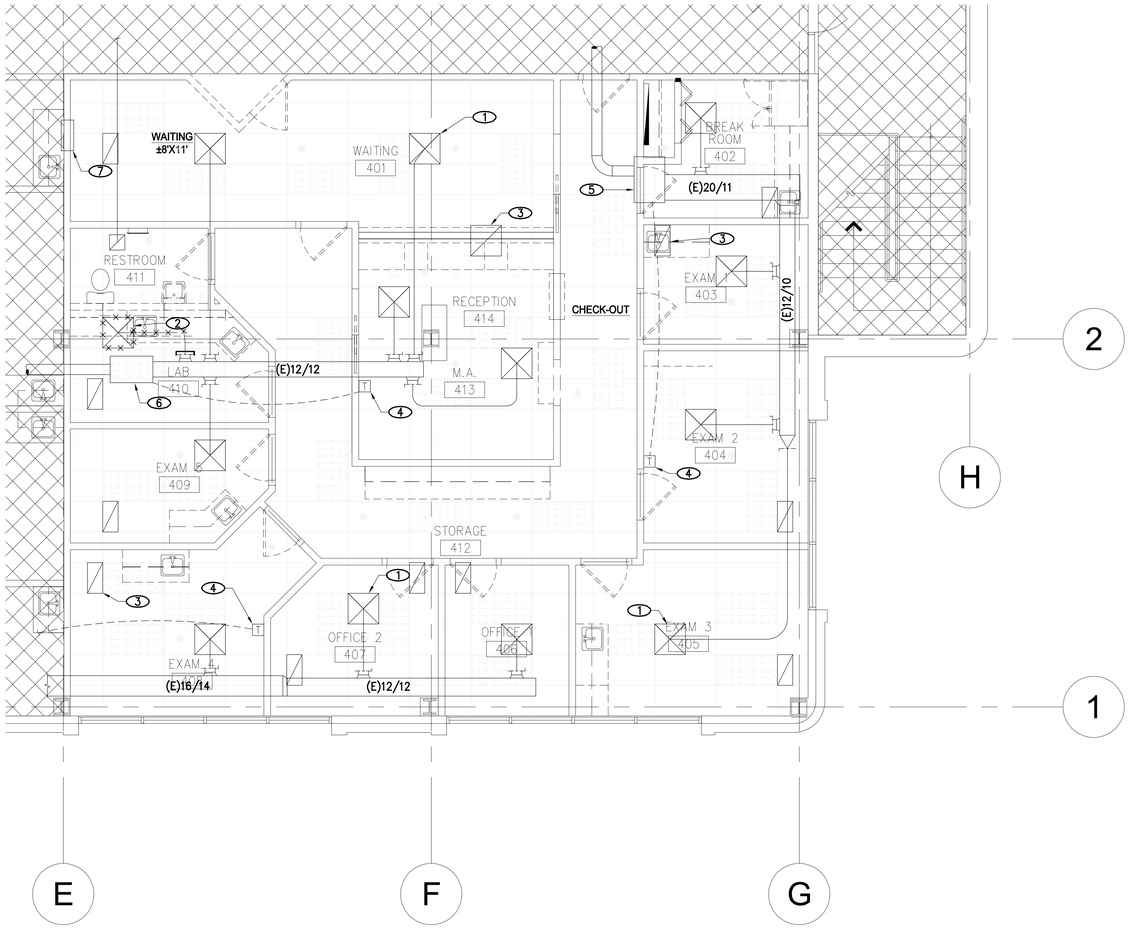

N

MECHANICAL DEMOLITION FLOORPLAN 1

1/4"=1'-0" M1.0

RSN: *1129333*
Permit #: *2016-1136607 LT*

City of Aurora Building Division
Reviewed for Code Compliance
Approved as Noted: *Craig Macy*
Date: *Jul 15, 2016*
2015 INTERNATIONAL CODES & 2014 NEC

COLORADO LICENSED
STEVEN BERNARD NAGEL
30163
PROFESSIONAL ENGINEER

JUNE 28, 2016

THESE DRAWINGS AND SPECIFICATIONS ARE THE PROPERTY AND COPYRIGHT OF WARE MALCOMB AND SHALL NOT BE USED ON ANY OTHER WORK EXCEPT BY AGREEMENT WITH WARE MALCOMB. WRITTEN DIMENSIONS SHALL TAKE PRECEDENCE OVER SCALED DIMENSIONS AND SHALL BE VERIFIED ON THE JOB SITE. ANY DISCREPANCY SHALL BE BROUGHT TO THE NOTICE OF WARE MALCOMB PRIOR TO THE COMMENCEMENT OF ANY WORK.

WARE MALCOMB
Leading Design for Commercial Real Estate
architecture
planning
interiors
graphics
civil engineering
1600 champa st.
suite 300
denver, colorado 80202
p 720.148.3626

MOEN ENGINEERING CONSULTANTS INC
2828 SPEER BLVD, SUITE 210
DENVER, CO 80211
P: (303)907-4285

SPEC SUITE
1411 S. POTOMAC ST, SUITE 440
AURORA, CO

DATE	REMARKS
2015/12/10	ISSUE FOR PERMIT
2016/06/28	CLIENT CHANGES

DATE	REMARKS

PA / PM:	CNB
DRAWN BY:	CNB
JOB NO.:	DEN15-6178-00

SHEET
M1.0

Wed, 29 Jun 2016

S:\Dropbox (MEC)\MEC JOBS\2015\2015-093-01 1411 S POTOMAC SPEC SUITE 440\DRAWINGS\MECHANICAL\M10.dwg

CAUTION: IF THIS SHEET IS NOT 30"x42" IT IS A REDUCED PRINT

NOTES

1. NEW LOCATION FOR PREVIOUSLY REMOVED SUPPLY DIFFUSER, EXTEND SA DUCT, SIZED TO MATCH DUCT, BACK TO MAIN AND CONNECT WITH SPIN–IN FITTING WITH MVD. BALANCE TO CFM INDICATED.
2. EXISTING EXHAUST GRILLE TO REMAIN. BALANCE TO CFM INDICATED.
3. PROVIDE AND INSTALL FAN, MOUNTED IN CEILING, PROVIDE FULL SIZED DISCHARGE DUCT AND DISCHARGE INTO CEILING PLENUM.
4. PROVIDE AND INSTALL REVERSE ACTING THERMOSTAT, MOUNT ON WALL AT 60" AFF.
5. UNDERCUT DOOR 2" BY G.C.

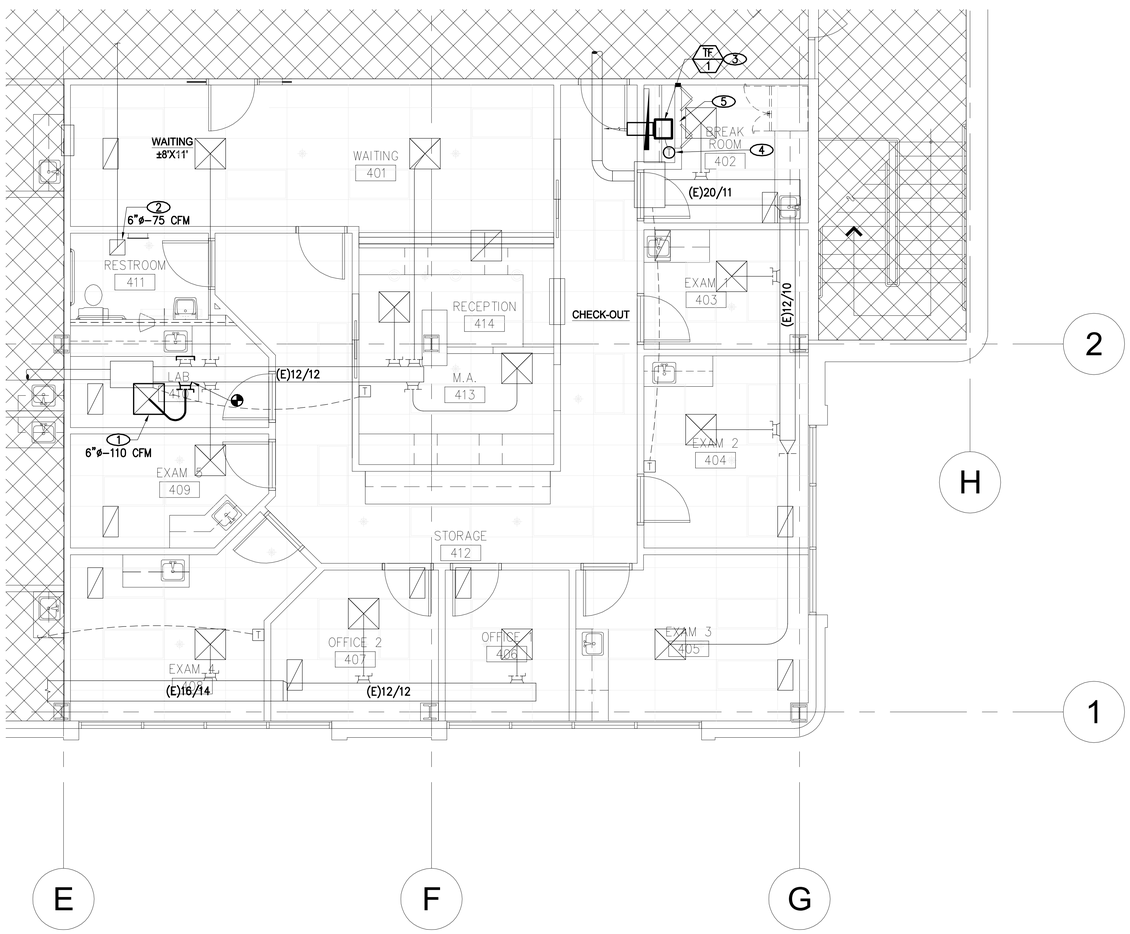

N

MECHANICAL FLOORPLAN

1/4"=1'–0"

1
M1.0

RSN: *1129333*
Permit #: *2016-1136607 LT*

This sheet of drawings has not been reviewed for code compliance.

COLORADO LICENSED
PROFESSIONAL ENGINEER
BRIAN BRAND PHEIFER
36163

JUNE 28, 2016

THESE DRAWINGS AND SPECIFICATIONS ARE THE PROPERTY AND COPYRIGHT OF WARE MALCOMB AND SHALL NOT BE USED ON ANY OTHER WORK EXCEPT BY AGREEMENT WITH WARE MALCOMB. WRITTEN DIMENSIONS SHALL TAKE PRECEDENCE OVER SCALED DIMENSIONS AND SHALL BE VERIFIED ON THE JOB SITE. ANY DISCREPANCY SHALL BE BROUGHT TO THE NOTICE OF WARE MALCOMB PRIOR TO THE COMMENCEMENT OF ANY WORK.

WARE MALCOMB
Leading Design for Commercial Real Estate

architecture
planning
interiors
graphics
civil engineering
1600 champa st.
suite 300
denver, colorado 80202
p 720.148.3626

MOEN ENGINEERING CONSULTANTS INC
2828 SPEER BLVD, SUITE 210
DENVER, CO 80211
P: (303)907-4285

SPEC SUITE
1411 S. POTOMAC ST, SUITE 440
AURORA, CO

DATE	REMARKS	DATE	REMARKS
2015/12/10	ISSUE FOR PERMIT		
2016/06/28	CLIENT CHANGES		

PA / PM:	CNB
DRAWN BY:	CNB
JOB NO.:	DEN15–6178–00

SHEET
M2.0

Wed, 29 Jun 2016

S:\Dropbox (MEC)\MEC JOBS\2015\2015-093-01 1411 S POTOMAC SPEC SUITE 440\DRAWINGS\MECHANICAL\M20.dwg

CAUTION: IF THIS SHEET IS NOT 30"x42" IT IS A REDUCED PRINT

PLUMBING SPECIFICATIONS

ALL WETTED PARTS USED TO CONVEY WATER ANTICIPATED FOR HUMAN CONSUMPTION SHALL BE CERTIFIED LEAD-FREE IN COMPLIANCE WITH NSF/ANSI-372 OR NSF/ANSI 61G.

WATER PIPING ABOVE GRADE SHALL BE TYPE L, HARD DRAWN COPPER WITH WROUGHT COPPER FITTINGS SOLDERED WITH 95-5 TIN-ANTIMONY SOLDER OR BRAZED WITH SILVER BASED FILLER METAL.

WATER PIPING SHALL BE TESTED WITH WATER AT 125 PSIG. TEST PRESSURE SHALL BE MAINTAINED FOR A MINIMUM OF 30 MINUTES WITH NO LOSS. DOMESTIC WATER PIPING SHALL BE DISINFECTED IN ACCORDANCE WITH THE REQUIREMENTS OF THE JURISDICTIONAL HEALTH AND PLUMBING CODES.

ABOVE GRADE SOIL, WASTE, VENT AND STORM DRAIN PIPING SHALL BE NO-HUB, CAST IRON. INSTALLATION SHALL BE IN ACCORDANCE WITH MANUFACTURER'S RECOMMENDATIONS.

SOIL AND WASTE PIPING 2-1/2" AND SMALLER SHALL BE SLOPED 1/4" PER FOOT AND PIPING 3" AND LARGER SHALL BE SLOPED 1/8" PER FOOT UNLESS NOTED OTHERWISE ON DRAWINGS.

WALL CLEANOUTS FOR WASTE PIPING SHALL BE FURNISHED AND INSTALLED BELOW SINKS, LAVATORIES AND URINALS IN ACCORDANCE WITH APPLICABLE SECTIONS OF THE JURISDICTIONAL PLUMBING CODE. FLOOR/GRADE CLEANOUTS FOR WASTE PIPING SHALL BE FURNISHED AND INSTALLED IN ACCORDANCE WITH APPLICABLE SECTIONS OF THE JURISDICTIONAL PLUMBING CODE.

SOIL, WASTE, VENT AND STORM DRAIN PIPING SHALL BE TESTED WITH WATER UNDER PRESSURE EQUIVALENT TO THE HIGHEST POINT AND 10' MINIMUM. THE SYSTEM OR PORTION THEREOF SHALL BE UNDER PRESSURE FOR A MINIMUM OF 15 MINUTES BEFORE INSPECTION.

DOMESTIC WATER AND STORM PIPING SHALL BE INSULATED WITH NONCOMBUSTIBLE, PREFORMED, FIBERGLASS, PIPE INSULATION WITH A CONDUCTIVITY (K-VALUE) LESS THAN 0.27 AT 75°F AND A FLAME SPREAD/ SMOKE DEVELOPED RATING OF 25/50 OR LESS. INSULATION SHALL HAVE A KRAFT REINFORCED FOIL VAPOR BARRIER WITH SELF-SEALING ADHESIVE JOINTS. INSULATION AT HANGERS AND CLAMPS SHALL BE OF HIGH DENSITY INSULATING MATERIAL. INSULATED PIPING EXPOSED TO VIEW SHALL BE COVERED AND FINISHED WITH A 30 MIL. THICK PVC JACKET.

PIPE INSULATION SCHEDULE
DOMESTIC COLD WATER COPPER PIPING = 1/2" THICK INSULATION
DOMESTIC HOT WATER SUPPLY COPPER PIPING = 1" THICK INSULATION

* RUN-OUTS TO INDIVIDUAL FIXTURES DO NOT NEED TO BE INSULATED

WATER HAMMER ARRESTERS EQUAL TO SIOUX CHIEF HYDRA-RESTER SHALL BE FURNISHED AND INSTALLED ON HOT AND COLD WATER PIPING SYSTEMS IN ACCORDANCE WITH MANUFACTURER'S INSTALLATION REQUIREMENTS. WATER HAMMER ARRESTERS SHALL BE PDI CERTIFIED AND ANSI APPROVED.

PIPE HANGERS FOR INSULATED PIPE SIZES 1/2" TO 1-1/2" SHALL BE ADJUSTABLE, STEEL, BAND TYPE. SHIELDS SHALL BE USED WHERE HANGER SUPPORTS INSULATED PIPE. SHIELDS SHALL BE 18 GAGE GALVANIZED STEEL OVER INSULATION 180 DEGREES AND A MINIMUM OF 12 INCHES LONG. PIPE HANGERS FOR BARE PIPE SHALL BE ADJUSTABLE, MALLEABLE STEEL, SPLIT RING TYPE. BARE COPPER PIPE SHALL BE PROTECTED FROM CORROSION BY TRISOLATOR OR SIMILAR PRODUCT. HANGERS SHALL BE PROVIDED AT INTERVALS IN ACCORDANCE WITH THE JURISDICTIONAL PLUMBING CODE. PIPING SHALL BE PROVIDED WITH SEISMIC RESTRAINTS IN ACCORDANCE WITH THE SMACNA SEISMIC RESTRAINT MANUAL - GUIDELINES FOR MECHANICAL SYSTEMS.

PENETRATIONS OF FIRE RATED WALLS OR FLOORS BY PIPE SHALL BE SEALED BY A FIRESTOPPING SYSTEM UL LISTED FOR THE APPLICATION. PENETRATION SEAL MATERIALS SHALL BE INSTALLED IN ACCORDANCE WITH PRINTED INSTRUCTIONS OF THE UL FIRE RESISTANCE DIRECTORY AND MANUFACTURERS INSTRUCTIONS. FIRESTOPPING SYSTEM SHALL BE EQUAL TO 3M FIRE BARRIER. FIRESTOPPING MATERIAL SHALL BE CAULK OR PUTTY TYPE.

CHROME PLATED ESCUTCHEONS SHALL BE PROVIDED AT PIPE SLEEVES FOR EXPOSED BARE PIPE.

GENERAL NOTES

1. ALL WORK SHALL BE INSTALLED IN ACCORDANCE WITH ALL APPLICABLE STATE CODES, LOCAL CODES, AND OWNER'S STANDARDS INDICATED BY THE CONSTRUCTION DOCUMENTS.
2. PLUMBING DRAWINGS ARE DIAGRAMMATIC AND DO NOT NECESSARILY INDICATE EVERY REQUIRED OFFSET, FITTING, ETC. DRAWINGS ARE NOT TO BE SCALED FOR DIMENSIONS. TAKE ALL DIMENSIONS FROM ARCHITECTURAL DRAWNGS, CERTIFIED EQUIPMENT DRAWINGS AND FROM THE STRUCTURE ITSELF BEFORE FABRICATING ANY WORK, VERIFY ALL SPACE REQUIREMENTS COORDINATING WITH OTHER TRADES, AND INSTALL THE SYSTEMS IN THE SPACE PROVIDED WITHOUT EXTRA CHARGES TO THE OWNER.
3. CONTRACTOR SHALL COORDINATE WORK INDICATED WITH MECHANICAL, ELECTRICAL, FIRE PROTECTION, STRUCTURAL, CIVIL, AND ARCHITECTURAL DIVISIONS. CONTRACTOR SHALL VERIFY SIZE & LOCATION OF EXISTING UTILITIES PRIOR TO COMMENCING WORK, COORDINATE WITH OTHER TRADES AND MAKE FINAL CONNECTION.
4. PROVIDE ALL EQUIPMENT SCHEDULED OR INDICATED ON THE DRAWINGS BUT NOT INCLUDED WITHIN THE SPECIFICATIONS INCLUDING ANY REQUIRED BUT NOT LISTED MISC ITEMS REQUIRED TO PROVIDE COMPLETE OPERATIONAL SYSTEMS AS INDICATED WHETHER SPECIFICALLY CALLED FOR OR NOT. INSTALLATION SHALL CONFORM TO MANUFACTURERS RECOMMENDATIONS AND APPLICABLE CODES. PROVIDE SUBMITTALS FOR ALL PROPOSED FIXTURES, EQUIPMENT AND MATERIALS TO BE UTILIZED.
5. ITEM DESIGNATIONS INDICATED HEREON ARE FOR PURPOSES OF THESE DOCUMENTS ONLY. CONTRACTOR SHALL VERIFY WITH OWNERS REPRESENTATIVE ACTUAL "TAGGING" INFORMATION TO BE PROVIDED FOR EACH ITEM OF MECHANICAL EQUIPMENT PRIOR TO NAMEPLATE ORDER RELEASE.
6. PROVIDE CLEANOUTS WHERE INDICATED ON DRAWINGS OR AS REQUIRED BY JURISDICTIONAL PLUMBING CODE.
7. CLEAN, TEST, AND SANITIZE ALL PLUMBING IN ACCORDANCE WITH REQUIREMENTS OF JURISDICTIONAL PLUMBING AND HEALTH CODES.
8. WHERE PIPES PASS THROUGH FIRE-RATED FLOOR OR WALLS, SEAL WITH MATERIALS EQUAL TO 3M FIRE BARRIER, MEETING TESTING PER ASTM-E-814 (UL 1479). USE CAULK OR PUTTY TYPE. ALL EXTERIOR WALL AND ROOF PENETRATIONS SHALL BE SEALED WATERPROOF.
9. AT THE COMPLETION OF THE WORK AND PRIOR TO FINAL ACCEPTANCE, ALL PARTS OF THE WORK INSTALLED UNDER THIS SPECIFICATION SHALL BE THOROUGHLY CLEANED.
10. ALL EQUIPMENT, MATERIALS, AND INSTALLATION IS TO BE WARRANTEED FOR ONE YEAR TO BE FREE FROM DEFECT. PROVIDE WRITTEN WARRANTY TO OWNER.
11. THE OWNER AND ENGINEER ARE NOT RESPONSIBLE FOR THE CONTRACTOR'S SAFETY PRECAUTIONS OR TO MEANS, METHODS, TECHNIQUES, CONSTRUCTION SEQUENCES, OR PROCEDURES REQUIRED TO PERFORM HIS WORK.
12. THIS CONTRACTOR SHALL FIELD VERIFY LOCATIONS AND SIZES OF ALL EXISTING EQUIPMENT, DUCTWORK, PIPING, ELECTRICAL CONDUIT, STRUCTURAL MEMBERS, ETC., PRIOR TO STARTING OF CONSTRUCTION. COORDINATE CONFLICTS WITH THE GENERAL CONTRACTOR.
13. THIS CONTRACTOR SHALL COORDINATE ALL REQUIRED EXISTING BUILDING SERVICE SYSTEM OUTAGES WITH BUILDING MANAGEMENT.
14. ALL PLUMBING SYSTEMS ARE REQUIRED TO BE INSTALLED PER BASE BUILDING REQUIREMENTS, LOCAL AND STATE JURISDICTIONAL CODES, ORDINANCES, AND APPLICABLE REGULATIONS.
15. SAWCUT/CORE DRILL EXISTING FLOOR AS REQUIRED FOR INSTALLATION OR CAPPING OF WASTE AND VENT PIPING. PATCH AND REPAIR TO MATCH EXISTING.
16. PATCH AND REPAIR TO MATCH EXISTING, ANY WALL/CEILINGS TO BE ACCESSED TO ROUTE PIPING.
17. EXISTING PLUMBING AND EQUIPMENT TO REMAIN IS SHOWN LIGHT. NEW PLUMBING AND EQUIPMENT IS SHOWN HEAVY. EXISTING PLUMBING AND EQUIPMENT TO BE REMOVED IS SHOWN WITH A HATCH OVER THE ITEM.

MECHANICAL SHEET INDEX

ISSUE

	06.28.2016 CLIENT CHANGES	12.10.2015 ISSUE FOR PERMIT	SHEET NO.	SHEET DESCRIPTION
	●	●	P0.0	PLUMBING SPECIFICATIONS, NOTES, LEGEND AND SCHEDULES
	●	●	P1.0	PLUMBING DEMOLITION FLOORPLAN
	●	●	P2.0	PLUMBING FLOORPLAN

PLUMBING LEGEND

ABBR.	SYMBOL	DESCRIPTION
S OR W		SOIL, WASTE OR SEWER BELOW GRADE OR FLOOR
S OR W		SOIL, WASTE OR SEWER ABOVE GRADE OR FLOOR
FCO/GCO		FLOOR OR GRADE CLEANOUT
CO		CLEANOUT
V		VENT
CW		COLD WATER
HW		HOT WATER
SOV		SHUT-OFF VALVE
U		UNION
PG		PRESSURE GAUGE
PC		PIPE CAP
POC		POINT OF CONNECTION NEW TO EXISTING
FD		FLOOR DRAIN
FS		FLOOR SINK

PLUMBING FIXTURE SCHEDULE

MARK	DESCRIPTION	MFR/MODEL	ROUGH-IN (INCHES) HW	CW	V	TRAP	S/W	NOTES

S-1	15" WIDE X 17-1/2" LONG X 6" DEEP SINGLE COMPARTMENT SELF RIMMING SINK CONSTRUCTED OF 18 GAUGE SOUND DAMPENED STAINLESS STEEL WITH HOLE DRILLINGS TO MEET FAUCET SPECIFICATIONS. PROVIDE STAINLESS STEEL BASKET STRAINER, CHROME PLATED BRASS P-TRAP AND WASTE ARM, 1/2" NOM. COMP. X 3/8" NOM. COMP. CHROME PLATED ANGLE STOPS WITH WHEEL HANDLES, CHROME PLATED FLEXIBLE SEAMLESS COPPER TUBE SUPPLIES, AND (1) PIECE SET SCREW TYPE CHROME PLATED CAST BRASS ESCUTCHEONS AT WALL PENETRATIONS. FAUCET TO BE OF CHROME PLATED CAST BRASS CONSTRUCTION WITH 2.2 GPM VANDAL RESISTANT AERATOR AND CERAMIC DISK CARTRIDGE TYPE VALVE. ALL TRIM TO BE CHROME PLATED COPPER OR BRASS.	SINK = ELKAY #LRAD-1517 OR EQUAL BY JUST, MOEN
		FAUCET = AMER. STD. #2475F OR EQUAL BY KOHLER, DELTA, SYMMONS, CHICAGO
		STRAINER = ELKAY #LK35 OR EQUAL BY BRASSCRAFT, DEARBORN BRASS, KOHLER, AMER. STD., DELTA, CHICAGO, T&S BRASS, PROFLO
			1/2	1/2	1 1/2	1 1/2	1 1/2	

IWB-1	COLD ROLLED STEEL RECESSED WALL BOX WITH WHITE POWDER COAT FINISH, DOMESTIC WATER SUPPLY AND SHUT-OFF VALVE FOR COLD WATER SUPPLY.	ICE MACHINE SUPPLY WALL BOX = GUY GRAY MIB OR EQUAL BY SPECIALTY PRODUCTS, SIOUX CHIEF	--	1/2	--	--	--	

RSN: *1129333*
Permit #: *2016-1136607 LT*

This sheet of drawings has not been reviewed for code compliance.

COLORADO LICENSED
BRIAN BERNARD BREEZE
36163
PROFESSIONAL ENGINEER

JUNE 28, 2016

THESE DRAWINGS AND SPECIFICATIONS ARE THE PROPERTY AND COPYRIGHT OF WARE MALCOMB AND SHALL NOT BE USED ON ANY OTHER WORK EXCEPT BY AGREEMENT WITH WARE MALCOMB. WRITTEN DIMENSIONS SHALL TAKE PRECEDENCE OVER SCALED DIMENSIONS AND SHALL BE VERIFIED ON THE JOB SITE. ANY DISCREPANCY SHALL BE BROUGHT TO THE NOTICE OF WARE MALCOMB PRIOR TO THE COMMENCEMENT OF ANY WORK.

WARE MALCOMB
Leading Design for Commercial Real Estate
architecture
planning
interiors
graphics
civil engineering
1600 champa st.
suite 300
denver, colorado 80202
p 720.898.2626

MOEN ENGINEERING CONSULTANTS INC
2828 SPEER BLVD, SUITE 210
DENVER, CO 80211
P: (303)907-4285

SPEC SUITE
1411 S. POTOMAC ST, SUITE 440
AURORA, CO

DATE	REMARKS	DATE	REMARKS
2015/12/10	ISSUE FOR PERMIT		
2016/06/28	CLIENT CHANGES		

PA / PM:	CNB
DRAWN BY:	CNB
JOB NO.:	DEN15-6178-00

SHEET
P0.0

Wed, 29 Jun 2016

S:\Dropbox (MEC)\MEC JOBS\2015\2015-093-01 1411 S POTOMAC SPEC SUITE 440\DRAWINGS\PLUMBING\P00.dwg

CAUTION: IF THIS SHEET IS NOT 30"x42" IT IS A REDUCED PRINT

NOTES

1. DEMO EXISTING SINK AND DISCARD. CAP HW, CW AND WW ROUGH-INS FOR FUTURE SINK.
2. REMOVE EXISTING SINK. CAP EXISTING HW, CW, W AND V PIPING IN CEILING SPACE FOR FUTURE CONNECTION. RETAIN SINK FOR REINSTALLATION.
3. REMOVE EXISTING LAV AND RETAIN FOR REINSTALLATION. CAP EXISTING HW, CW, W AND V PIPING IN CEILING SPACE FOR FUTURE CONNECTION.
4. REMOVE EXISTING WC AND RETAIN FOR REINSTALLATION. CAP EXISTING HW, CW, W AND V PIPING IN CEILING SPACE FOR FUTURE CONNECTION.
5. EXISTING SINK TO REMAIN.

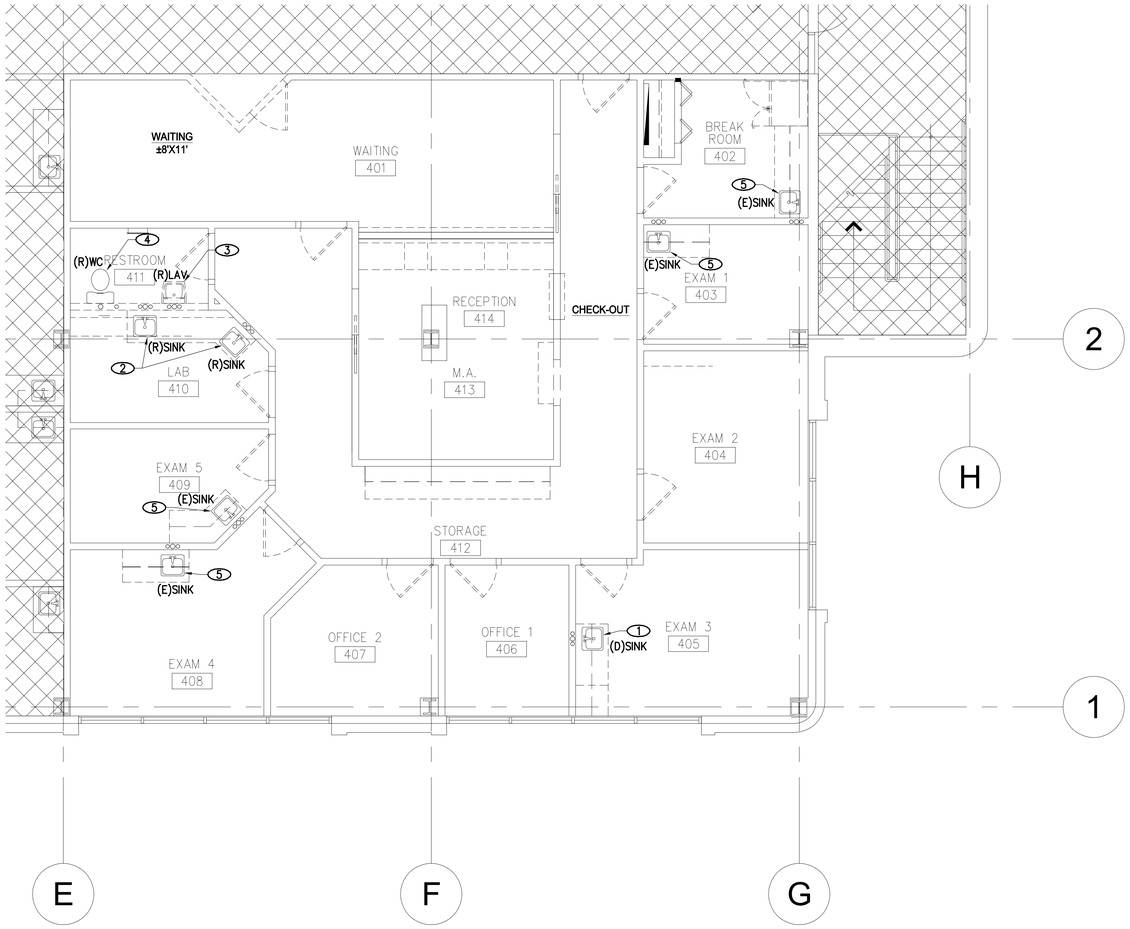

N

PLUMBING DEMOLITION FLOORPLAN

1/4"=1'-0"

1 / P1.0

RSN: *1129333*
Permit #: *2016-1136607 LT*

This sheet of drawings has not been reviewed for code compliance.

COLORADO LICENSED
BRIAN C. BOWEN
36463
PROFESSIONAL ENGINEER

JUNE 28, 2016

THESE DRAWINGS AND SPECIFICATIONS ARE THE PROPERTY AND COPYRIGHT OF WARE MALCOMB AND SHALL NOT BE USED ON ANY OTHER WORK EXCEPT BY AGREEMENT WITH WARE MALCOMB. WRITTEN DIMENSIONS SHALL TAKE PRECEDENCE OVER SCALED DIMENSIONS AND SHALL BE VERIFIED ON THE JOB SITE. ANY DISCREPANCY SHALL BE BROUGHT TO THE NOTICE OF WARE MALCOMB PRIOR TO THE COMMENCEMENT OF ANY WORK.

WARE MALCOMB
Leading Design for Commercial Real Estate

architecture
planning
interiors
graphics
civil engineering
1600 champa st.
suite 300
denver, colorado 80202
p 720.148.3626

MOEN ENGINEERING CONSULTANTS INC
2828 SPEER BLVD, SUITE 210
DENVER, CO 80211
P: (303)907-4285

SPEC SUITE
1411 S. POTOMAC ST, SUITE 440
AURORA, CO

DATE	REMARKS	DATE	REMARKS
2015/12/10	ISSUE FOR PERMIT		
2016/06/28	CLIENT CHANGES		

PA / PM:	CNB
DRAWN BY:	CNB
JOB NO.:	DEN15-6178-00

SHEET
P1.0

Wed, 29 Jun 2016

S:\Dropbox (MEC)\MEC JOBS\2015\2015-093-01 1411 S POTOMAC SPEC SUITE 440\DRAWINGS\PLUMBING\P10.dwg

CAUTION: IF THIS SHEET IS NOT 30"x42" IT IS A REDUCED PRINT

NOTES

1. NEW LOCATION FOR PREVIOUSLY REMOVED 15"x17-1/2" SINK, MODIFY EXISTING ROUGH-INS AS REQUIRED AND CONNECT 1/2"HW, 1/2"CW, 1-1/2"W TO RELOCATED SINK.
2. NEW LOCATION FOR PREVIOUSLY REMOVED 22"x19" SINK, EXTEND 1/2"HW, 1/2"CW, 1-1/2"W TO EXISTING BUILDING UTILITIES AND CONNECT.
3. NEW LOCATION FOR PREVIOUSLY REMOVED LAVATORY, EXTEND 1/2"HW, 1/2"CW, 1-1/2"W TO EXISTING BUILDING UTILITIES AND CONNECT.
4. NEW LOCATION FOR PREVIOUSLY REMOVED WATER CLOSET, EXTEND 1/2"CW, 4"W AND 2"V TO EXISTING BUILDING UTILITIES AND CONNECT.
5. ROUGH-IN AND CONNECT NEW IWB, EXTEND 1/2"CW AS INDICATED AND CONNECT TO EXISTING CW LINE AT SINK.
6. ROUGH-IN AND CONNECT NEW SINK S-1, EXTEND 1/2"CW, 1/2"HW, AND 2"W AS INDICATED AND CONNECT TO EXISTING BUILDING UTILITIES. PROVIDE WITH 1-1/2" AAV ON SINK TAILPIECE.
7. PROVIDE AND INSTALL NEW 15"x17-1/2" SINK, MODIFY EXISTING ROUGH-INS AS REQUIRED AND CONNECT 1/2"HW, 1/2"CW, 1-1/2"W TO RELOCATED SINK.

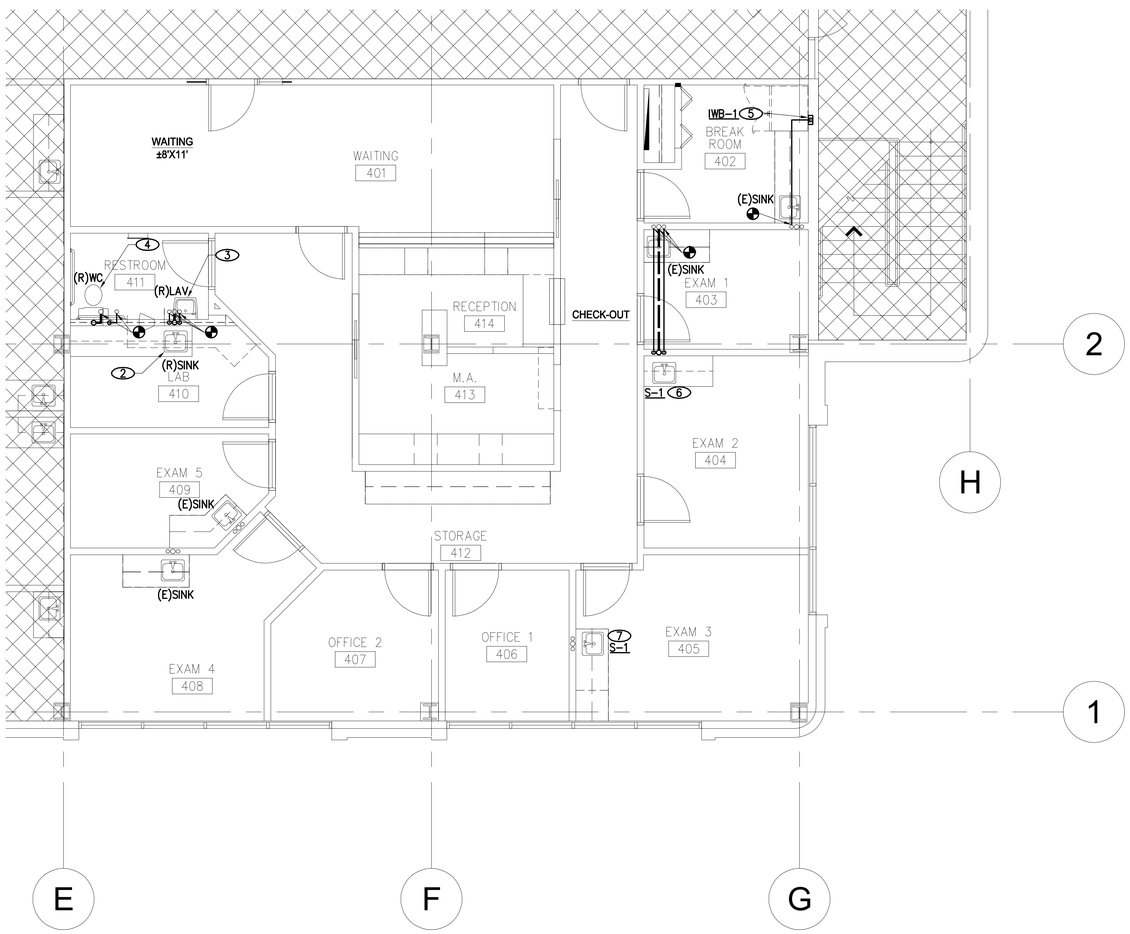

PLUMBING FLOORPLAN

1/4"=1'-0"

1 / P1.0

RSN: 1129333
Permit #: 2016-1136607 LT

City of Aurora Building Division
Reviewed for Code Compliance
Approved as Noted: Craig Macy
Date: Jul 15, 2016
2015 INTERNATIONAL CODES & 2014 NEC

COLORADO LICENSED
BRYAN SCHWEDTMEYER
30163
PROFESSIONAL ENGINEER

JUNE 28, 2016

THESE DRAWINGS AND SPECIFICATIONS ARE THE PROPERTY AND COPYRIGHT OF WARE MALCOMB AND SHALL NOT BE USED ON ANY OTHER WORK EXCEPT BY AGREEMENT WITH WARE MALCOMB. WRITTEN DIMENSIONS SHALL TAKE PRECEDENCE OVER SCALED DIMENSIONS AND SHALL BE VERIFIED ON THE JOB SITE. ANY DISCREPANCY SHALL BE BROUGHT TO THE NOTICE OF WARE MALCOMB PRIOR TO THE COMMENCEMENT OF ANY WORK.

WARE MALCOMB
Leading Design for Commercial Real Estate

architecture
planning
interiors
graphics
civil engineering

1600 champa st.
suite 300
denver, colorado 80202
p 720.898.3626

MOEN ENGINEERING CONSULTANTS INC
2828 SPEER BLVD, SUITE 210
DENVER, CO 80211
P: (303)907-4285

SPEC SUITE
1411 S. POTOMAC ST, SUITE 440
AURORA, CO

DATE	REMARKS
2015/12/10	ISSUE FOR PERMIT
2016/06/28	CLIENT CHANGES

DATE	REMARKS

PA / PM:	CNB
DRAWN BY:	CNB
JOB NO.:	DEN15-6178-00

SHEET
P2.0

Wed, 29 Jun 2016

S:\Dropbox (MEC)\MEC JOBS\2015\2015-093-01 1411 S POTOMAC SPEC SUITE 440\DRAWINGS\PLUMBING\P20.dwg

CAUTION: IF THIS SHEET IS NOT 30"x42" IT IS A REDUCED PRINT

GENERAL PROJECT NOTES

NOTE: SEE ARCHITECTURAL DRAWINGS FOR ADDITIONAL CONSTRUCTION REQUIREMENTS

1. THE CONTRACTOR SHALL PROVIDE ALL LABOR AND MATERIAL NECESSARY FOR A COMPLETE, OPERATIONAL AND PROPERLY FUNCTIONING ELECTRICAL SYSTEM
2. MATERIALS AND INSTALLATION SHALL COMPLY WITH CODES, LAWS AND ORDINANCES OF FEDERAL, STATE AND LOCAL GOVERNING BODIES HAVING JURISDICTION.
3. MATERIALS AND EQUIPMENT SHALL BE LISTED AND/OR LABELED BY U.L., ETL, CSA OR ANOTHER RECOGNIZED TESTING LAB. ALL MATERIAL, EQUIPMENT, WIRING DEVICES, ETC. SHALL BE NEW, UNLESS SPECIFICALLY INDICATED AS EXISTING TO BE REUSED.
4. THE CONTRACTOR SHALL PREPARE AND SUBMIT TO GOVERNMENTAL AGENCIES AND UTILITY COMPANIES SHOP DRAWINGS REQUIRED BY THESE AGENCIES FOR APPROVAL. THE CONTRACTOR SHALL SECURE AND PAY FOR ALL PERMITS, GOVERNMENTAL FEES, TAXES AND LICENSES NECESSARY FOR THE PROPER EXECUTION AND COMPLETION OF THE ELECTRICAL WORK. THIS CONTRACTOR SHALL SECURE AND PAY ALL FEES AND PERMITS PERTAINING TO THIS CONTRACT, SHALL BE RESPONSIBLE FOR WORKER'S IDENTIFICATION AND BADGING, SAFETY, AND LIABILITY INSURANCE. PROVIDE BARRICADES, WARNING SIGNS, AND TRASH REMOVAL FOR THE SAFETY OF THE WORKERS UNDER THIS CONTRACTOR'S EMPLOY.
5. THE CONTRACTOR SHALL NOTIFY THE ARCHITECT/ENGINEER/OWNER OF ANY MATERIALS OR APPARATUS BELIEVED TO BE INADEQUATE, UNSUITABLE, IN VIOLATION OF LAWS, ORDINANCES, RULES OR REGULATIONS OF AUTHORITIES HAVING JURISDICTION.
6. THE CONTRACTOR SHALL PREPARE THE DOCUMENTS, INCLUDING DRAWINGS, REQUIRED TO OBTAIN APPROVAL OF THE EQUIPMENT AND LOCATIONS OF THE DEVICES THAT COMPRISE THE BUILDING FIRE ALARM LIFE SAFETY SYSTEM. THE DRAWINGS AND CUT SHEETS SHALL BE PROVIDED TO A PROFESSIONAL ENGINEER FOR REVIEW AND APPROVAL. THE APPROVED DRAWINGS WILL BE STAMPED, SIGNED AND RETURNED TO E.C. TO SUBMIT TO THE BUILDING DEPARTMENT.
7. THE CONTRACTOR SHALL CAREFULLY EXAMINE THE CONTRACT DOCUMENTS, VISIT THE SITE, AND THOROUGHLY BECOME FAMILIAR WITH THE BUILDING STANDARDS, LOCAL JURISDICTIONAL CODES AND REQUIREMENTS, AND LOCAL CONDITIONS RELATING TO THE WORK. FAILURE TO DO SO WILL NOT RELIEVE THE CONTRACTOR OF THE OBLIGATIONS OF THE CONTRACT. SUBMISSION OF PROPOSAL IN CONNECTION WITH THIS WORK SHALL IMPLY THAT THE BIDDER HAS EXAMINED THE JOB SITE. NO EXTRA CHARGE WILL BE ALLOWED FOR CHANGES AS A RESULT FROM FAILURE TO EXAMINE THE JOB SITE.
8. THE CONTRACTOR SHALL PROVIDE TEMPORARY POWER AND WIRING FOR THE PERFORMANCE OF ALL TRADES, FOR THE ENTIRE PERIOD OF CONSTRUCTION AND SHALL REMOVE ALL TEMPORARY WIRING AT THE COMPLETION OF CONSTRUCTION.
9. THE EXISTING POWER, SIGNAL AND COMMUNICATION SYSTEMS ARE TO REMAIN IN SERVICE TO PROVIDE FOR THE OWNER'S FUNCTION. SHOULD IT BECOME NECESSARY TO SHUT-DOWN ANY SYSTEM OR PORTION OF A SYSTEM, APPROVAL IN WRITING MUST BE OBTAINED FROM THE OWNER AND SHALL ONLY APPLY FOR THE PERIOD AND TIME AGREED UPON. THE BID IS TO INCLUDE THE COST OF ANY TEMPORARY WIRING AND PREMIUM TIME REQUIRED FOR THE SHUTDOWN.
10. ALL MATERIALS AND EQUIPMENT SHALL BE ERECTED, INSTALLED, CONNECTED, CLEANED, ADJUSTED, TESTED, CONDITIONED, AND PLACED IN SERVICE IN ACCORDANCE WITH THE MANUFACTURER'S DIRECTIONS AND RECOMMENDATIONS.
11. ALL CUTTING, DRILLING AND PATCHING OF MASONRY, STEEL OR IRON WORK BELONGING TO THE BUILDING MUST BE DONE BY THIS CONTRACTOR IN ORDER THAT HIS WORK MAY BE PROPERLY INSTALLED, BUT UNDER NO CONDITIONS MAY STRUCTURAL WORK BE CUT, EXCEPT AT THE DIRECTION OF THE ARCHITECT-DESIGNER OR THEIR REPRESENTATIVE.
12. REFER TO ARCHITECTURAL DRAWINGS FOR EXACT LOCATIONS AND MOUNTING HEIGHTS OF ELECTRICAL FIXTURES AND ELECTRICAL DEVICES. MOUNTING HEIGHTS SHALL CONFORM TO ADA/ICC/ANSI STANDARDS.
13. ALL WORK REQUIRED FOR THE INSTALLATION AS SHOWN ON DRAWINGS INCLUDING LABOR, EQUIPMENT AND MATERIALS SHALL BE IN STRICT COMPLIANCE WITH THE BUILDING STANDARDS.
14. PROVIDE COMPLETE METAL RACEWAY SYSTEMS AND ENCLOSURES FOR ALL WIRING THROUGHOUT THE EXTENT OF THE REQUIRED SYSTEM.
15. ALL TEL/ DATA BOXES SHALL BE PROVIDED WITH A 1/2" CONDUIT AND BUSHING WITH PULL STRING RUN 6" ABOVE FINISHED CEILING OR CEILING GRID. ELECTRICAL METALLIC TUBING (EMT) SHALL BE USED FOR ALL WALL OUTLETS & TELEPHONE WIRING RUNNING BELOW RAISED FLOOR OR ABOVE HARD CEILINGS.
16. ALL RECEPTACLES NOTED AS ISOLATED GROUND (IG) OR DEDICATED OR CIRCUITED AS DEDICATED SHALL BE PROVIDED WITH A DEDICATED GROUND AND NEUTRAL.
17. MINIMUM CONDUIT SIZE SHALL BE 3/4" UNLESS OTHERWISE INDICATED. CONDUITS LARGER THAN 2" DIAMETER OR CONDUITS OF ANY SIZE ROUTED OUTDOORS SHALL BE INTERMEDIATE METAL CONDUIT (IMC).
18. FLEXIBLE CONDUIT CONNECTIONS TO RECESSED LIGHTING FIXTURES SHALL BE MADE WITH FLEXIBLE STEEL CONDUIT, 3/8 INCH MINIMUM.
19. FINAL CONNECTIONS TO MOTORS SHALL BE MADE WITH LIQUID TIGHT FLEXIBLE STEEL CONDUIT, 1/2 INCH MINIMUM.
20. WIRE NO. 8 AND SMALLER INSTALLED IN DRY LOCATIONS SHALL BE TYPE THWN OR THHN THERMOPLASTIC 600V INSULATED COPPER CONDUCTORS. NO WIRE SMALLER THAN NO.12 SHALL BE USED FOR LIGHTING OR POWER WIRING. WIRE NO. 8 AND LARGER SHALL BE STRANDED. ALL CONDUCTORS INSTALLED IN EXTERIOR OR WET LOCATIONS SHALL BE TYPE THWN 600V INSULATED COPPER CONDUCTORS.
21. ALL NEW CIRCUIT BREAKERS FOR NEW OR EXISTING PANELBOARDS SHALL MATCH EXISTING OR NEW BUILDING STANDARD PANELBOARD MANUFACTURER AND BREAKER TYPE. THE CONTRACTOR SHALL PROVIDE NEW ACCURATE AND DETAILED TYPE WRITTEN PANEL DIRECTORIES PER NEC 408.4 FOR ALL NEW OR MODIFIED PANELS. NUMBERED CIRCUITS ARE FOR CONVENIENCE OF DESIGN ONLY. E.C. TO FIELD VERIFY ACTUAL CIRCUIT NUMBERS USED AND CORRECTLY INDICATE ON "AS-BUILT" DRAWINGS. THE E.C. SHALL REMOVE ALL ABANDONED CIRCUITS.
22. PROVIDE #10 FOR BRANCH CIRCUITS OVER 75' AT 120V AND OVER 150' AT 277V. E.C. TO FIELD VERIFY BRANCH CIRCUIT LENGTHS AND SIZE CONDUCTORS FOR VOLTAGE DROP.
23. EACH SWITCH, LIGHT, RECEPTACLE AND ALL OTHER DEVICES SHALL BE PROVIDED AND INSTALLED WITH A GALVANIZED OR SHERARDIZED PRESSED STEEL JUNCTION BOX OF NOT LESS THAN NO. 14 U.S. GAUGE STEEL. CONDUITS SHALL BE FASTENED WITH LOCKNUTS AND BUSHINGS AND ALL UNUSED KNOCKOUTS MUST BE LEFT SEALED. THERE MUST BE SUFFICIENT ROOM FOR WIRES AND BUSHINGS AND DEEP BOXES SHALL BE INSTALLED WHERE REQUIRED. BOXES SHALL BE SECURELY AND ADEQUATELY SUPPORTED.
24. ELECTRICAL CONTRACTOR SHALL PROVIDE ALL SPECIAL OUTLET BOXES THAT MAY BE REQUIRED TO ENCLOSE RECEPTACLES.
25. IN SUSPENDED CEILINGS SUPPORT CONDUIT AND JUNCTION BOXES DIRECT FROM THE STRUCTURAL SLAB, DECK, OR FRAMING PROVIDED FOR THAT PURPOSE. LIGHTING BRANCH CIRCUIT CONDUITS SHALL NOT BE CLIPPED TO THE CEILING SUPPORT WIRES OR SPLINE UNLESS THE CEILING SYSTEM HAS BEEN SPECIFICALLY DESIGNED FOR THAT PURPOSE.
26. PROVIDE LOCAL DISCONNECT SWITCHES FOR ALL MOTORS (PLENUM APPROVED WHERE REQUIRED).
27. THE E.C. SHALL INCLUDE IN HIS COST THE REMOVAL OF ALL EXISTING ELECTRICAL DEVICES, CONDUITS, FIXTURES AND EQUIPMENT THAT IS NOT TO BE REUSED. DISCARD ALL EQUIPMENT AS REQUIRED. E.C. SHALL BE RESPONSIBLE FOR DISCONNECTING PRIMARY SERVICE AND TEMPORARY POWER.
28. PROVIDE WARRANTY GUARANTEED FOR A PERIOD OF ONE YEAR AFTER COMPLETION AND ACCEPTANCE. REPLACE ALL DEFECTIVE WORKMANSHIP, EQUIPMENT AND MATERIALS WITHOUT ADDITIONAL CHARGES.
29. THIS CONTRACTOR SHALL BE RESPONSIBLE FOR THE SAFEKEEPING OF HIS/HER OWN PROPERTY ON THE JOB SITE. THE OWNER OR TENANT ASSUMES NO RESPONSIBILITY FOR PROTECTION OF THIS CONTRACTOR'S PROPERTY AGAINST FIRE, THEFT, OR ENVIRONMENTAL CONDITIONS.
30. WHERE CONDUIT, CABLES, DUCTWORK OR PIPING PASSES THROUGH FIRE RATED FLOORS, WALLS, OR PARTITIONS, THE SLEEVES SHALL BE COMPLETELY SEALED WITH A FIRE STOP MATERIAL THAT IS U.L. LISTED (EQUAL TO DOW CORNING) AND ACCEPTED BY THE BUILDING DEPARTMENT AND FIRE DEPARTMENT AS BEING SUITABLE FOR THE SERVICE. THIS MATERIAL SHALL BE INSTALLED IN ACCORDANCE WITH THE MANUFACTURER'S PUBLISHED INSTRUCTIONS IN ORDER TO MAINTAIN THE FIRE RATING OF THE PENETRATED WALL, FLOOR, OR PARTITION. INSTALLATION SHALL BE A THROUGH-PENETRATION FIRESTOP SYSTEM INSTALLED AS TESTED IN ACCORDANCE WITH ASTM AND UL. THE FIRE RATING SHALL MATCH THE RATING OF THE BARRIER BEING PENETRATED.
31. SUBMIT SIX (6) SETS OF SHOP DRAWINGS, CONTROL DIAGRAMS, AND EQUIPMENT CUTS TO THE ENGINEER FOR APPROVAL PRIOR TO STARTING RELATED WORK. SHOP DRAWINGS SHALL INCLUDE MANUFACTURER'S NAMES, CATALOG NUMBERS, CUTS, DIAGRAMS AND OTHER SUCH DESCRIPTIVE DATA AS MAY BE REQUIRED TO IDENTIFY AND REVIEW THE EQUIPMENT. SUBMITTALS SHALL BE IN LOGICAL GROUPS, PARTIAL SUBMITTALS WILL NOT BE REVIEWED.
32. UPON COMPLETION OF CONSTRUCTION, SUPPLY THE ENGINEER WITH ONE COMPLETE SET OF FULL SIZE AS-BUILT DRAWINGS. PROVIDE THE OWNER WITH THREE (3) SETS OF OPERATION AND MAINTENANCE MANUALS FOR EACH TYPE OF EQUIPMENT INSTALLED.
33. THIS CONTRACTOR SHALL ASSUME ALL ADDED EXPENSES TO ALL TRADES ASSOCIATED WITH THE INSTALLATION OF SUBMITTED AND APPROVED ALTERNATE EQUIPMENT.
34. THE CONTRACTOR SHALL COORDINATE THE LAYOUT OF THE FIRE ROOM WITH ALL OTHER DISCIPLINES, ESPECIALLY THE FIRE ALARM AND FIRE PROTECTION DESIGN-BUILD CONTRACTORS PRIOR TO ANY WORK.
35. IF ANY CHANGES ARE MADE TO ACCOMMODATE FIELD CONDITIONS NOTIFY THE ENGINEER IMMEDIATELY OF WHAT THE CHANGES WERE, THE REASON FOR THE CHANGES, AND THE COST IMPACTS.
36. LOCATE ALL ELECTRICAL SWITCHBOARDS, PANELBOARDS AND ELECTRICAL DISTRIBUTION EQUIPMENT IN DEDICATED SPACES AND PROTECTED FROM DAMAGE WITH ADEQUATE WORKING CLEARANCE ACCORDANCE WITH NEC 110 REQUIREMENTS. PROVIDE PROTECTION FROM ANY FOREIGN SYSTEM INSTALLED ABOVE THE DEDICATED EQUIPMENT SPACE PER NEC 110.26(E).
37. ELECTRICAL ROOM DOORS SHALL BE EQUIPPED WITH PANIC BARS, PRESSURE PLATES, OR OTHER DEVICES THAT ARE NORMALLY LATCHED BUT OPEN UNDER SIMPLE PRESSURE IN ACCORDANCE WITH NEC 110.26(C)(3)
38. FOR ANY PATIENT CARE AREAS, AS DETERMINED BY THE GOVERNING BODY OF THE FACILITY OR AUTHORITY HAVING JURISDICTION, THE E.C. SHALL PROVIDE HEALTHCARE FACILITY CABLE (HCF) TYPE MC OR AC WIRING METHODS AS REQUIRED IN ORDER TO COMPLY WITH NEC 517.13 (A) AND (B) AND NEC 517.80 FOR LOW VOLTAGE SYSTEMS. IN ADDITION PROVIDE TAMPER-RESISTANT COVERS FOR RECEPTACLES IN PEDIATRIC LOCATIONS PER NEC 517.8

FIRE ALARM SYSTEM NOTES

FIRE ALARM SYSTEM IS TO BE DESIGN/BUILD BY THE CONTRACTOR.

ELECTRICAL LEGEND

NOTE: NOT ALL ITEMS APPEAR ON DRAWINGS. SYMBOLS MAY DIFFER FROM EXISTING AND DEMO WORK OR DEVICES REFERENCED OR SYMBOLS USED FROM DRAWINGS BY OTHERS.

POWER AND LIGHTING

- GROUNDED SWITCHED DUPLEX RECEPTACLE
- GROUNDED SPLIT-WIRED RECEPTACLE
- GROUNDED DUPLEX RECEPTACLE
- GROUNDED QUADRAPLEX RECEPTACLE
- SPECIAL PURPOSE RECEPTACLE
- FLOOR/CEILING MOUNTED RECEPTACLE
- JUNCTION BOX
- WALL MOUNTED JUNCTION BOX
- DISCONNECT SWITCH
- FUSED DISCONNECT SWITCH
- THERMAL OVERLOAD SWITCH
- ELECTRICAL PANEL BOARD
- TRANSFORMER
- 3 #8 — CIRCUIT '#8' HOMERUN TO PANEL 'X' (ARROWS NOT USED IF CIRCUIT NUMBERS APPEAR NEXT TO DEVICES)
- PORCELAIN LAMP HOLDER
- RECESSED FLUORESCENT LIGHT FIXTURE
- SURFACE MOUNTED FLUORESCENT FIXTURE
- CEILING FIXTURE
- WALLWASHER or ADJUSTABLE DOWNLIGHT
- SINGLE POLE SWITCH, OR #-POLE
- DIMMER SWITCH
- EXIT SIGN - SHADED INDICATES FACE
- EMERGENCY FIXTURE - SHADED
- BATTERY PACK EMERGENCY LIGHT or COMBO EXIT - SEE SCHEDULE

LOW VOLTAGE SYSTEMS

- TELEPHONE TERMINAL BOARD
- TV — FLOOR/CEILING MOUNTED DATA OUTLET
- TV — FLOOR/CEILING MOUNTED TELEPHONE OUTLET
- DATA OUTLET
- TELEPHONE/DATA OUTLET PROJECT STANDARD
- TELEPHONE OUTLET
- CATV/MONITOR A/V OUTLET
- S — SPEAKER
- FACP — FIRE ALARM PANEL
- FAA — FIRE ALARM REMOTE ANNUNCATOR PANEL
- S, H — S-SMOKE, T-HEAT DETECTOR
- DD — DUCT FIRE DETECTOR

ABBREVIATIONS

EWC	ELECTRIC WATER COOLER
EF	EXHAUST FAN
GFI	GROUND FAULT INTERRUPTING
AFI	ARC FAULT INTERRUPTING
CCT	CIRCUIT
E.C.	ELECTRICAL CONTRACTOR
AG	ABOVE COUNTER GFI - VERIFY HEIGHT
AC	ABOVE COUNTER - VERIFY HEIGHT
WP	WEATHER PROOF
TTB	TELEPHONE TERMINAL BOARD
AFF	ABOVE FINISH FLOOR
AHJ	AUTHORITY HAVING JURISDICTION
(E)	EXISTING TO REMAIN
(EX)	EXISTING TO BE REMOVED
(ER)	EXISTING TO BE RELOCATED
(R) (RL)	RELOCATE/RELOCATED LOCATION

REFERENCE SYMBOLS

- KEYED NOTE
- EQUIPMENT - SEE SCHEDULE
- FEEDER - SEE SCHEDULE
- TRANSFORMER WITH GROUNDING AND OVERCURRENT DEVICES SEE TRANSFORMER SCHEDULE

REMODEL WORK TYPICAL SYMBOLS, LINEWEIGHTS, LINETYPES AND ABBREVIATIONS

- (EX) — DEMOLITION, TO BE REMOVED
- (ER) — EXISTING TO BE REMOVED FOR RELOCATION AND REUSE
- (E) — EXISTING TO REMAIN
- (RL) — RELOCATED LOCATION
- (N) — NEW WORK

PROJECT SPECIFIC SYMBOLS

- ABOVE COUNTER OUTLET

Feeder Schedule

3000/W	8(W-500kcmil, 400kcmil, 3-1/2"C)
2000/W	6(W-400kcmil, 250kcmil, 3"C)
1600/W	5(W-400kcmil, 4/0G, 3"C)
1200/W	4(W-350kcmil, 3/0G, 3"C)
1000/W	3(W-400kcmil, 2/0G, 3"C)
800/W	3(W-300kcmil, 1/0G, 3"C)
750/W	3(W-250kcmil, 1/0G, 3"C)
600/W	2(W-350kcmil, #1G, 3"C)
500/W	2(W-250kcmil, #2G, 3"C)
400/W	2(W-3/0, #3G, 2"C)
350/W	2(W-2/0, #3G, 2"C)
300/W	W-350kcmil, #4G, 3"C
250/W	W-250kcmil, #4G, 3"C
225/W	W-4/0, #4G, 2"C
200/W	W-3/0, #6G, 2"C
175/W	W-2/0, #6G, 2"C
150/W	W-1/0, #6G, 2"C
125/W	W#1, #6G, 1-1/2"C
110/W	W#2, #6G, 1-1/4"C
100/W	W#1, #6G, 1-1/2"C
90/W	W#2, #6G, 1-1/4"C
80/W	W#3, #6G, 1-1/4"C
70/W	W#4, #6G, 1-1/4"C
60/W	W#4, #6G, 1-1/4"C
50/W	W#6, #10G, 1"C
40/W	W#8, #10G, 1"C
30/W	W#10, #10G, 3/4"C
20/W	W#12, #12G, 3/4"C

This table indicates minimum conductor size for feeders of the ampacity indicated where #W indicates the #-Ampacity and W-numbers of wire, #S/W indicates no ground. All conductors shall be Copper unless noted as Aluminum 'Al'

"Conductor Ampacities shall be based on table 310.15(B)(16) 60 degree column up to 100 Amps and 75 degree column above 100 Amps unless otherwise permitted by NEC. Ampacity rating shall be selected in accordance NEC 110.14 (C).

The master electrician shall be responsible for ensuring that no feeders or branch circuits are installed in a manner or sized in such a way as to violate the NEC.

Service Ground Table		Equipment Ground Table	
150G	#6	20EG	#12
200G	#4	60EG	#10
300G	#2	100EG	#8
500G	1/0	200-1200A per Above	
800G	2/0	1600EG	4/0
>800G	3/0	2000EG	250kcmil

Service Ground Conductors sized Per NEC Table 250.66
Equipment Ground Conductors sized Per NEC Table 250.122
All conductors shall be Copper unless noted as Aluminum 'Al'

The service ground chart indicates the minimum Service Ground Conductor based on #G where # is the ampacity from the chart above, and the equipment ground chart indicates the minimum equipment grounding conductor size #EG where # is the rating/ setting of the overcurrent device protecting the conductors and equipment.

Where discrepancies occur between the Feeder Schedule Schedule and the Grounding Tables, the larger conductor shall be used unless otherwise permitted by the NEC.

The installation shall meet all NEC 250 grounding and bonding requirements including 250.4 Path for Fault Current. Provide complete raceway systems metallically joined, connected, and fittings as required for electrical continuity per NEC 300.10

Transformer Schedule

Primary OCP 480V, 3Ø	Size kVA	Ground Cu	Secondary OCP 208V, 3Ø
20A	15	#8	50A
50A	30	#6	100A
70A	45	#6	150A
125A	75	#2	250A
175A	112.5	#2	400A
225A	150	1/0	500A
350A	225	2/0	800A

Primary shall be 3-Wire and Secondary shall be 4-Wire unless noted otherwise. All transformers 45kVA and smaller shall be suspended and all transformers larger than 45kVA shall be floor mounted unless noted otherwise. Primary and Secondary Feeders shall be sized based on the Overcurrent Protection Device Ampere Rating.

The installation shall meet all NEC 250 grounding and bonding requirements. Provide Equipment Ground on Primary Feeder and Seperately Derived Grounded System at the Transformer Secondary in accordance with NEC 250.30(A). Provide Grounding Electrode connection to Structural Metal or Metal Water Pipe in accordance with 250.30(A)(4) and sized in accordance with NEC Table 250.66

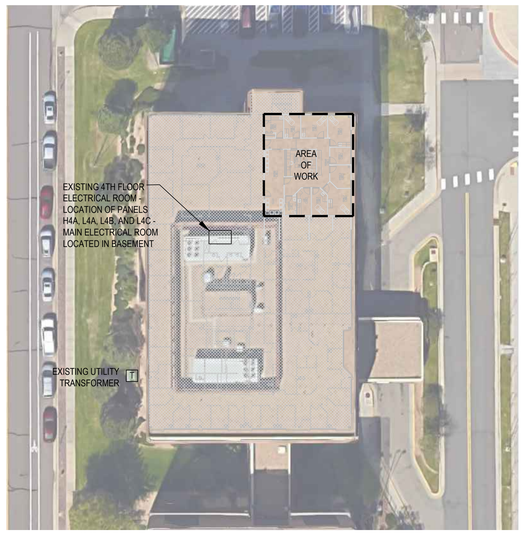

2 / E0.0 PROXIMITY PLAN

SCALE: NTS

GENERAL NOTES:

1. PLAN SHOWN FOR REFERENCE ONLY. E.C. SHALL FIELD VERIFY EXISTING CONDITIONS.

Project North

LUMINAIRE SCHEDULE

June 28, 2016

Label	Light Fixture Description	Specification	Lamping	Voltage	Mounting	Comment
Interior Lighting						
A	2'x4' Recessed Troffer L-Series Contour	Orion LED Recessed Luminaire OLRL-035-L-UNV-FDX-840-24-1P-CT-M-LF	32W LED 4000K/85CRI	120/277	Recessed	1
D	6" Dimmable LED Downlight 900 Lumen LED, White Trim, Haze Reflector	Lithonia Lighting RWS 35/15 RQEAR120	22.5W LED 3500K/90CRI	120	Recessed	1
Emergency Lighting						
EM	Emergency Light Fixture, Dual Head with 90-Minute Battery Pack	Lithonia ELM2-8	(2) 6V, 1.2W Included	120/277	Surface 18' on Center	
X	LED Exit Sign with 90-Minute Battery Pack	Simkar SLEDAC/BGW	3.8W Max. LED Included	120/277	Surface 18' on Center	

NOTES: Apply to all fixtures where applicable

1. EMERGENCY FIXTURES - All Fixtures Indicated as Emergency shall be provided with a 90-Minute Battery Pack and all Fluorescent Fixtures indicated as Emergency shall be provided with a 1300 Lumen, 90-Minute Battery Pack.
2. VERIFY VOLTAGES - The E.C. shall verify voltages on drawings prior to ordering or any work, the engineer shall be notified of any discrepancies in the voltage of the circuiting on the drawings and the luminaire schedule prior to any purchase or work.
3. VERIFY LAMPING - The E.C. shall verify lamping with the manufacturer prior to ordering and notify the engineer of any lamping discrepancies.
4. PROVIDE A COMPLETE INSTALLATION - The E.C. shall provide all labor and material to provide a complete and functional system per the design intent as dictated by the switching type and location (including dimmer switches and compatible ballasts or transformers), ceiling type and location, circuiting, voltages, and lamping types.
5. BALLAST DISCONNECT - All electric discharge luminaires shall comply with NEC 410.130 and shall have a means of disconnect for the ballast.
6. DUAL LEVEL SWITCHING - For fixtures with more than one switch designation shown on plans provide fixtures with additional ballasts for dual level light control by separate switching of inboard and outboard lamps as required to conform to IECC Requirements.
7. OWNER APPROVAL - Approve all light fixture types with tenant/owner before ordering any materials or any work.
8. CITY OF DENVER - Exit signs shall have green lettering on a contrasting field, or white lettering on a green field per DBCA 1011.4.1.

COMMENTS: Apply to specific fixture types as noted on schedule

1. 0-12V Dimming - Provide low voltage wiring between all fixtures and low-voltage wallbox dimmer. Verify requirements with provider and provide all work required for a complete installation.

FAULT CURRENT CALCULATION TABLE

November 4, 2015

500 kVA Utility Transformer — VOLTAGE 480 — AVAILABLE FAULT CURRENT (F) 33,400

LOCATION (n)	# of RUNS	CONDUCTOR	VOLTAGE	L(ft)	C	Total C	f	M	E
2500A Main	8	500	480	125	26,706	213,648	0.07	0.93	**31,202**
Panel H4A	1	3/0	480	100	12,844	12,844	0.88	0.53	**16,636**
Panel L4A,B,C			Secondary of a 75kVA Transformer with Minimum %Z=2.50%						**8,333**

NOTES:

1. All Calculations use Bussman "Point-To-Point" Method.
2. Variables: L=Feeder Length (LF) C=Conductor "C" Value M(n) =1 + (1+f(n))
   f(n) = (1.73 x L x F(n-1))/(C x # of runs x Voltage) in Amperes F(n)=F(n-1) x M(n)
3. The E.C. shall report any discrepancies to the Engineer.
4. Conductor lengths shall not be less than the values listed. The E.C. shall field verify conductor lengths and contact engineer immediately if conductor lengths are less than the values shown.
5. Conductor Lengths listed in this table are for fault study purposes only and shall not be used for bidding or other calculations.
6. All in-line Utility Meters shall be protected to limit the Fault Current to no more than 10kA at the Meter per the Utility Company requirements.
7. Label and date available fault current value at the main service disconnect per NEC 110.24(A)
8. Provide Arc-Flash Hazard study and labeling for personnel and protective equipment prior to energizing equipment per NEC 110.16 and NFPA 70E.

COMcheck Software Version 4.0.2.0

Interior Lighting Compliance Certificate

Project Information

Energy Code: 2015 IECC
Project Title: Spec Suite
Project Type: New Construction

Construction Site:
1411 S. Potomac St
Suite 440
Aurora, CO 80012

Owner/Agent:

Designer/Contractor:
Dawn Keller, PM
Front Range Electrical Engineering
3333 S. Wadsworth Blvd.
Suite D210
Lakewood, CO 80227
303-985-0548
Dawn@FREEngineer.com

Additional Efficiency Package

High efficiency HVAC. Systems that do not meet the performance requirement will be identified in the mechanical requirements checklist report.

Allowed Interior Lighting Power

A Area Category	B Floor Area (ft2)	C Allowed Watts / ft2	D Allowed Watts (B X C)
1-Medical Office (Health Care-Clinic)	2000	0.90	1800
		Total Allowed Watts =	1800

Proposed Interior Lighting Power

A Fixture ID : Description / Lamp / Wattage Per Lamp / Ballast	B Lamps/ Fixture	C # of Fixtures	D Fixture Watt.	E (C X D)
1-Medical Office (Health Care-Clinic)				
LED 1: A: 2'x4' Troffer: Other:	1	33	32	1056
LED 2: D: 6" Dimmable Downlight: Other:	1	3	22	68
V: V: Vanity Light: 24" T8 17W: Electronic:	2	1	28	28
		Total Proposed Watts =		1152

Interior Lighting PASSES: Design 36% better than code

Interior Lighting Compliance Statement

Compliance Statement: The proposed interior lighting design represented in this document is consistent with the building plans, specifications, and other calculations submitted with this permit application. The proposed interior lighting systems have been designed to meet the 2015 IECC requirements in COMcheck Version 4.0.2.0 and to comply with the mandatory requirements listed in the Inspection Checklist.

Dawn Keller, P.M. — Name - Title
Dawn K — Signature
04-09-12 — Date

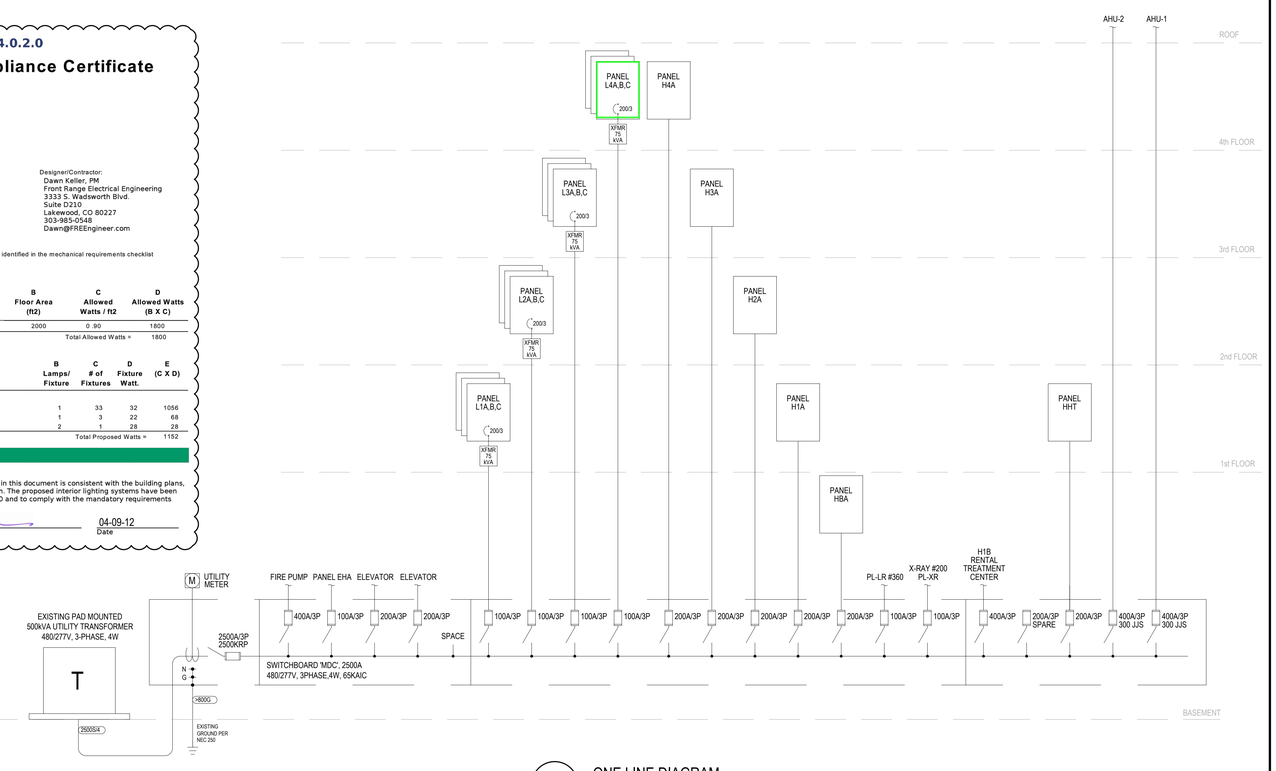

1 / E0.0 ONE LINE DIAGRAM

SCALE: NTS

ONE LINE DIAGRAM GENERAL NOTES:

1. E.C. TO FIELD VERIFY EXISTING CONDITIONS
2. ALL EQUIPMENT IS EXISTING - NO NEW WORK.
3. ALL EXTERIOR EQUIPMENT TO BE WEATHERPROOF
4. FIELD VERIFY INSTALLATION REQUIREMENTS WITH UTILITY PRIOR TO ANY ROUGH-IN.
5. THE E.C. SHALL PROVIDE LABELING OF ALL DISCONNECTING MEANS IN ACCORDANCE WITH NEC 110.22:
   - 5.a. PROVIDE LABEL ON EACH DISCONNECTING MEANS PER NEC 110.22(A)
   - 5.b. SERVICE EQUIPMENT SHALL BE LABELED WITH THE MAXIMUM AVAILABLE FAULT CURRENT AND DATE PER NEC 110.24(A).
   - 5.c. WHERE ANY SERIES RATED COMBINATION SYSTEMS ARE UTILIZED, PROVIDE LABEL ON EQUIPMENT CLOSURE INDICATING THE SERIES RATED SYSTEM COMPONENTS INCLUDING FUSE AND BREAKER TYPES AND RATINGS IN ACCORDANCE WITH NEC 110.22(B) AND 110.22(C): CAUTION – SERIES COMBINATION SYSTEM RATED ____ AMPERES. IDENTIFIED REPLACEMENT COMPONENTS REQUIRED.

City of Aurora Building Division
Reviewed for Code Compliance
Approved as Noted: *John Eckert*
Date: *Jul 15, 2016*
2015 INTERNATIONAL CODES & 2014 NEC

RSN: *1129333*
Permit #: *2016 1136607*

WARE MALCOMB
Leading Design for Commercial Real Estate
architecture
planning
interiors
graphics
site development
6251 greenwood plaza boulevard
building 6, suite 100
greenwood village, colorado 80111
p 720.488.2626
f 720.488.2625

34235 JUN 28 2016 PROFESSIONAL ENGINEER

Front Range Electrical Engineering
3333 S. Wadsworth Blvd. Suite D210, Lakewood, CO 80227
Fax: 720.638.8670 Ph: 303.985.0548

SPEC SUITE
1411 S. POTOMAC ST, SUITE 440
AURORA, CO

ONE LINE, NOTES AND SCHEDULES

DATE	REMARKS
12/18/15	CONSTRUCTION
6/28/16	LIGHTING REVISIONS

DATE	REMARKS

PE:	CLF
DRAWN BY:	DMK
JOB NO.:	DEN15-6178-00 15-292

SHEET
E0.0

THESE DRAWINGS AND SPECIFICATIONS ARE THE PROPERTY AND COPYRIGHT OF WARE MALCOMB AND SHALL NOT BE USED ON ANY OTHER WORK EXCEPT BY AGREEMENT WITH WARE MALCOMB. WRITTEN DIMENSIONS SHALL TAKE PRECEDENCE OVER SCALED DIMENSIONS AND SHALL BE VERIFIED ON THE JOB SITE. ANY DISCREPANCY SHALL BE BROUGHT TO THE NOTICE OF WARE MALCOMB PRIOR TO THE COMMENCEMENT OF ANY WORK.

D:\Dropbox (FREE)\FREE\2015\2015-292 1411 S Potomac Suite 440\E Sheet Set 2015-292 1411 S Potomac Suite 440- WareMalcomb-CBRE.dwg
Tue, 28 Jun 2016

CAUTION: IF THIS SHEET IS NOT 30"x42" IT IS A REDUCED PRINT

EQUIPMENT SCHEDULE

November 3, 2015

Key	Equipment	Equipment Load kW	HP	Amps	Volt	Ø	Branch Circuit Conductors	Conduit	Disconnect Switch	Fuse	Panel-Circuit	Comment
EXHAUST FANS												
TF-1	Exhaust Fan	0.0804		0.3	277	1	2#12,#12G	3/4"	Sto	NA		

Notes: (Apply to all equipment where applicable)
1. Field verify final location and electrical requirements of all equipment with provider prior to any work.
2. Provide line voltage controls and wiring as required for proper operation. Field verify control requirements with equipment provider.
3. Provide HACR breakers for all dedicated circuits serving equipment and provide local disconnecting means in accordance with NEC 430 Part IX.
4. Verify integral thermal/overload protection for fractional horsepower motors. Provide separate overload device where requried in accordance with NEC 430 Part III.

PANEL SCHEDULE: H4A

November 4, 2015

BUS RATING: 200 Amperes 3Ø, 4-WIRE
MAIN C.B.: or M.L.O: 200A
MOUNTING: Flush
COMMENTS: Existing Panelboard
VOLTAGE L-L: 480
VOLTAGE L-G: 277
S.C.RMS RATING (AIC): 25,000

NO.	AMPS	POLE	LOAD (VA)	NEC Demand	LOAD DESCRIPTION	Phase	LOAD DESCRIPTION	NEC Demand	LOAD (VA)	POLE	AMPS	NO.
1	20	1	695	1.25	Hall Lighting	A	UH-1	1.00	3324	1	30	2
3	20	1	700	1.25	Exterior Lighting	B	FVAV - 1	1.00	6648	1	60	4
5					Bussed Space	C	FVAV - 2	1.00	6648	1	60	6
7	20	1	725	1.25	Fluor.LTS STE 400	A	FVAV - 7	1.00	6648	1	60	8
9	20	1	750	1.25	Fluor.LTS STE 400	B	FVAV - 8	1.00	6648	1	60	10
11	20	1	770	1.25	Fluor.LTS STE 400	C	FVAV - 6	1.00	6648	1	60	12
13	20	1	730	1.25	Fluor.LTS STE 400	A	FVAV - 5	1.00	6648	1	60	14
15	20	1	725	1.25	Fluor.LTS STE 400	B	UH - 2	1.00	3324	1	30	16
17	20	1	715	1.25	Existing Load	C	FVAV - 4	1.00	6648	1	60	18
19	40	1	795	1.25	Fluor.LTS STE 400	A	FVAV - 3	1.00	6648	1	60	20
21	40	1	745	1.25	Fluor.LTS STE 400	B	Water Heater	1.00	3324	1	30	22
23	20	1	735	1.25	Fluor.LTS STE 400	C	Bussed Space					24
25	20	1	735	1.25	Fluor.LTS STE 400	A	Bussed Space					26
27	20	1	745	1.25	Existing Load	B	Bussed Space					28
29	20	1	745	1.25	Existing Load	C	Bussed Space					30
31						A	Bussed Space					32
33					Bussed Space	B	Bussed Space					34
35					Bussed Space	C	Bussed Space					36
37					Bussed Space	A	Bussed Space					38
39					Bussed Space	B	Bussed Space					40
41					Bussed Space	C	Bussed Space					42

CONNECTED LOAD:
PHASE A (VA): 26,948
PHASE B (VA): 23,609
PHASE C (VA): 22,909
TOTAL LOAD (VA): 73,466

CALCULATED DEMAND LOAD:
PHASE A (VA): 27,868
PHASE B (VA): 24,525
PHASE C (VA): 23,650
CALCULATED DEMAND LOAD (VA): 76,044 **91.47 A**

NOTES:
1. No new work - shown for reference only

PANEL SCHEDULE: L4A

November 4, 2015

BUS RATING: 200 Amperes 3Ø, 4-WIRE
MAIN C.B.: 200A/3P or M.L.O:
MOUNTING: Flush
COMMENTS: Existing Panelboard
VOLTAGE L-L: 208
VOLTAGE L-G: 120
S.C.RMS RATING (AIC): 10,000

NO.	AMPS	POLE	LOAD (VA)	NEC Demand	LOAD DESCRIPTION	Phase	LOAD DESCRIPTION	NEC Demand	LOAD (VA)	POLE	AMPS	NO.
1	20	1	360	1.00	Roof Receptacle	A	Down Ltg Suite 400	1.25	640	1	20	2
3	20	1	500	1.00	Existing Load	B	Down Ltg Suite 400	1.25	640	1	20	4
5	20	1	360	1.00	Core Receptacles	C	Down Ltg Suite 400	1.25	640	1	20	6
7	20	1	350	1.00	Drinking Fountain	A	Down Ltg Suite 400	1.25	640	1	20	8
9	20	1	360	1.00	Telephone Recept	B	Down Ltg Suite 400	1.25	640	1	20	10
11	20	1	540	1.00	Exam Rm Suite 400	C	Bussed Space					12
13	20	1	540	1.00	Exam Rm Suite 401	A	Receptc Suite 400	1.00	540	1	20	14
15	20	1	540	1.00	Exam Rm Suite 402	B	Receptc Suite 400	1.00	540	1	20	16
17	20	1	540	1.00	Exam Rm Suite 403	C	Receptc Suite 400	1.00	540	1	20	18
19	20	1	540	1.00	Exam Rm Suite 404	A	Bathroom Exhaust Fan	1.00	150	1	20	20
21	20	1	540	1.00	Exam Rm Suite 405	B	Break Rm Recepts	1.00	360	1	20	22
23	20	1	540	1.00	Exam Rm Suite 406	C	Receptc Suite 400	1.00	540	1	20	24
25	20	1	540	1.00	Exam Rm Suite 407	A	Receptc Suite 400	1.00	540	1	20	26
27	20	1	540	1.00	Exam Rm Suite 408	B	Receptc Suite 400	1.00	540	1	20	28
29	20	1	540	1.00	Exam Rm Suite 409	C	Receptc Suite 400	1.00	540	1	20	30
31	20	1	500	1.00	Xray CCT Ste 400	A	Receptc Suite 400	1.00	540	1	20	32
33	20	1	500	1.00	Xray CCT Ste 400	B	Switchboard Suite 400	1.00	360	1	20	34
35	30	2	1050	1.00	Film Proc.Sta 400	C	Vending Suite 400	1.00	500	1	20	36
37	30	2	1050	1.00	Film Proc.Sta 400	A	Receptc Suite 400	1.00	540	1	20	38
39	20	1	500	1.00	Film Rm Suite 400	B	Furn Sys Suite 400	1.00	720	1	20	40
41	20	1	250	1.00	Exhaust Fan #1	C	Furn Sys Suite 400	1.00	720	1	20	42

CONNECTED LOAD:
PHASE A (VA): 7,470
PHASE B (VA): 7,290
PHASE C (VA): 7,300
TOTAL LOAD (VA): 22,050

CALCULATED DEMAND LOAD:
PHASE A (VA): 7,790
PHASE B (VA): 7,600
PHASE C (VA): 7,460
CALCULATED DEMAND LOAD (VA): 22,850 **63.43 A**

NOTES:
1. No new work - shown for reference only

PANEL SCHEDULE: L4B

November 4, 2015

BUS RATING: 200 Amperes 3Ø, 4-WIRE
MAIN C.B.: or M.L.O: 200A
MOUNTING: Flush
COMMENTS: Existing Panelboard
VOLTAGE L-L: 208
VOLTAGE L-G: 120
S.C.RMS RATING (AIC): ~~10,000~~

NO.	AMPS	POLE	LOAD (VA)	NEC Demand	LOAD DESCRIPTION	Phase	LOAD DESCRIPTION	NEC Demand	LOAD (VA)	POLE	AMPS	NO.
1	20	1	540	1.00	Receptc Suite 400	A	Copier Suite 400	1.00	500	1	20	2
3	20	1	540	1.00	Receptc Suite 401	B	Furn Sys Suite 400	1.00	720	1	20	4
5	20	1	540	1.00	Receptc Suite 402	C	Furn Sys Suite 400	1.00	720	1	20	6
7	20	1	540	1.00	Receptc Suite 403	A	Receptc Suite 400	1.00	540	1	20	8
9	20	1	180	1.00	Computer Suite 400	B	EMG Mach Suite 450	1.00	450	1	20	10
11	20	1	180	1.00	Computer Suite 400	C	Exam Rec Suite 450	1.00	540	1	20	12
13	20	1	1120	1.00	Disposal Suite 400	A	Exam Rec Suite 450	1.00	540	1	20	14
15	20	1	540	1.00	Receptc Suite 400	B	Receptc Suite 450	1.00	540	1	20	16
17	20	1	1000	1.00	Microwave Suite 400	C	Receptc Suite 450	1.00	540	1	20	18
19	20	1	650	1.00	Dishwasher Suite 400	A	Exam Rec Suite 450	1.00	360	1	20	20
21	20	1	750	1.00	Refrig Suite 400	B	Exam Rec Suite 450	1.00	360	1	20	22
23	20	1	500	1.00	Copy Suite 400	C	Receptc Suite 450	1.00	540	1	20	24
25	20	1	360	1.00	Receptc Suite 400	A	View Box Suite 450	1.00	350	1	20	26
27	20	1	540	1.00	Furn Sys Suite 400	B	Copier Suite 450	1.00	500	1	20	28
29	20	1	540	1.00	Furn Sys Suite 400	C	Receptc Suite 450	1.00	540	1	20	30
31	20	1	500	1.00	Copier Suite 400	A	Tele Term Suite 450	1.00	360	1	20	32
33	20	1	360	1.00	Receptc Suite 400	B	Receptc Suite 450	1.00	540	1	20	34
35	20	1	360	1.00	Receptc Suite 400	C	Receptc Suite 450	1.00	540	1	20	36
37	20	1	250	1.00	Cir Pump Suite 400	A	Water Heater	1.00	832	2	20	38
39	**20**	**1**	**360**	**1.00**	**Suite 440 TTB**	B	Water Heater	1.00	832	2	20	40
41	**20**	**1**	**360**	**1.00**	**Suite 440 IT**	C	**Suite 440 Office Equip**	**1.00**	**500**	**1**	**20**	42

CONNECTED LOAD:
PHASE A (VA): 7,442
PHASE B (VA): 7,212
PHASE C (VA): 7,400
TOTAL LOAD (VA): 22,054

CALCULATED DEMAND LOAD:
PHASE A (VA): 7,442
PHASE B (VA): 7,212
PHASE C (VA): 7,400
CALCULATED DEMAND LOAD (VA): 22,054 **61.22 A**

NOTES:
~~1. New work shown in BOLD~~

PANEL SCHEDULE: L4C

November 4, 2015

BUS RATING: 200 Amperes 3Ø, 4-WIRE
MAIN C.B.: or M.L.O: 200A
MOUNTING: Flush
COMMENTS: Existing Panelboard
VOLTAGE L-L: 208
VOLTAGE L-G: 120
S.C.RMS RATING (AIC): 10,000

NO.	AMPS	POLE	LOAD (VA)	NEC Demand	LOAD DESCRIPTION	Phase	LOAD DESCRIPTION	NEC Demand	LOAD (VA)	POLE	AMPS	NO.
1	20	1	360	1.00	Receptc Ste 440	A	Microwave Ste 450	1.00	850	1	20	2
3	20	1	360	1.00	Receptc Ste 440	B	Disposal Ste 450	1.00	1120	1	20	4
5	20	1	360	1.00	Receptc Ste 440	C	Refrig Ste 450	1.00	750	1	20	6
7	20	1	360	1.00	Receptc Ste 440	A	Downlights Ste 450	1.25	640	1	20	8
9	20	1	360	1.00	Receptc Ste 440	B	Existing Load	1.00	450	1	20	10
11	20	1	360	1.00	Receptc Ste 440	C	Receptc 400	1.00	360	1	20	12
13	20	1	360	1.00	Receptc Ste 440	A	Copier Ste 400	1.00	500	3	20	14
15	20	1	180	1.00	TT4A	B	Disp + DW Ste 400	1.00	1000	3	20	16
17	20	1	540	1.00	Receptc Ste 440	C	Break Rm Ste 400	1.00	360	3	20	18
19	20	1	1120	1.00	Disposal	A	Microwave Ste 400	1.00	850	3	20	20
21	20	1	750	1.00	Refrig Ste 440	B	Break Rm Ste 400	1.00	360	3	20	22
23	20	1	1000	1.00	Microwave Ste 440	C	Refrig Ste 400	1.00	750	3	20	24
25	20	1	540	1.00	Receptc Ste 440	A	Existing Load	1.00	450	2	20	26
27	20	1	540	1.00	Receptc Ste 440	B	Reception Ste 400	1.00	360	2	20	28
29	20	1	540	1.00	Receptc Ste 440	C	X-Ray Rm Ste 400	1.00	350	1	20	30
31	20	1	360	1.00	Exam Rm Ste 440	A	RTU Ste 400	1.00	1200	2	40	32
33	20	1	360	1.00	Exam Rm Ste 440	B	RTU Ste 400	1.00	1200	2	40	34
35	20	1	360	1.00	Exam Rm Ste 440	C	X-Ray Rm Ste 400	1.00	350	1	20	36
37	20	1	450	1.00	EMG Mac Ste 440	A	AC Server Rm Ste 400	1.00	350	2	15	38
39	20	1	450	1.00	Existing Load	B	AC Server Rm Ste 400	1.00	350	2	15	40
41	20	1	450	1.00	Existing Load	C	Bussed Space					42

CONNECTED LOAD:
PHASE A (VA): 8,390
PHASE B (VA): 7,840
PHASE C (VA): 6,530
TOTAL LOAD (VA): 22,760

CALCULATED DEMAND LOAD:
PHASE A (VA): 8,550
PHASE B (VA): 7,940
PHASE C (VA): 6,530
CALCULATED DEMAND LOAD (VA): 22,920 **63.62 A**

NOTES:
1. No new work - shown for reference only

Provide emergency illumination equipment that complies with 2014 NEC 700.12 (F) or 2014 NEC 700.

LIGHTING PLAN GENERAL NOTES:
1. CONNECT EGRESS LIGHTING FIXTURES AND EXIT SIGNS TO AREA LIGHTING CIRCUIT AHEAD OF ANY SWITCH PER NEC 700-12(F) INCLUDING ANY NIGHT LIGHTS. FIXTURES SHOWN SHADED OR LABELED ARE EMERGENCY EGRESS (EM) WITH BATTERY PACK, NIGHT LIGHT (NL) OR BOTH (EM/NL).
2. PROVIDE OUTLET IN ACCESSIBLE LOCATION AT TENANT ENTRANCE FOR SIGN PER NEC 600-5.
3. NUMBERS NEXT TO DEVICES REFER TO CIRCUIT DESIGNATION IN PANEL 'H4A' UNLESS NOTED.
4. 2x4 LIGHT FIXTURES ARE TYPE 'A' AND DOWNLIGHTS ARE TYPE 'D' UNLESS NOTED.
5. EXIT SIGNS TYPE 'X' AND/OR 'XEM' AND EGRESS LIGHTS TYPE 'EM' SHALL BE NEW WITH EMERGENCY BATTERY PACK, MATCH EXISTING BUILDING STANDARD FIXTURES.
6. CLEAN, RE-LAMP, REFURBISH AND REPAIR EXISTING LIGHT FIXTURES TO BE RE-USED AS REQUIRED FOR AN AS-NEW APPEARANCE AND PERFORMANCE.
7. HEALTHCARE CABLE - PROVIDE APPROVED HEALTHCARE FACILITY HCF CABLE OR EQUAL INSULATED GROUND AND METAL RACEWAY WIRING SYSTEM FOR ALL PATIENT CARE AREAS IN ACCORDANCE WITH NEC 517 AND BUILDING STANDARD WIRING REQUIREMENTS.
8. BUILDING STANDARDS - PROVIDE ALL WORK IN ACCORDANCE WITH THE BUILDING STANDARDS INCLUDING BUT NOT LIMITED TO LIGHT FIXTURES, EGRESS LIGHTING, EXIT SIGNS, FIRE ALARM DEVICES, SWITCHES, RECEPTACLES, HOSPITAL GRADE RECEPTACLES, COVERPLATES, RACEWAYS AND BRANCH CIRCUIT WIRING. FIELD VERIFY REQUIREMENTS WITH BUILDING OWNER.
9. PROVIDE NEUTRAL AND GROUND CONDUCTORS THROUGHOUT ALL LIGHTING BRANCH CIRCUITS INCLUDING ALL SWITCH OR LIGHTING CONTROL DEVICE LOCATIONS IN ACCORDANCE WITH NEC.

1 LIGHTING PLAN KEYED NOTES:
1. WALLSWITCH OCCUPANCY SENSOR - PROVIDE DUAL TECHNOLOGY GREENGATE ONW-D-1001-MV-N-* OR EQUAL.
2. PROVIDE NEW SWITCHING OF EXISTING, NEW, OR RELOCATED FIXTURES FOR CONTROL OF ROOM LIGHTING AS REQUIRED FOR NEW PARTITION LAYOUT. FIELD VERIFY EXISTING CONDITIONS. MAINTAIN EXISTING CIRCUIT CONNECTIONS IF POSSIBLE OR PROVIDE NEW AS REQUIRED.
3. WALLSTATION DIMMER SWITCH - PROVIDE GREENGATE DECORA DF107-XX OR EQUAL RATED FOR CONNECTED LOAD TYPE AND WATTAGE COMPATIBLE WITH ALL CONNECTED LIGHT FIXTURES. PROVIDE LOW VOLTAGE WIRING FOR ANY 0-10V DIMMING AS REQUIRED.

Legibly identify each breaker or switch for it's use or purpose on the circuit directory in the panel/switchboard per 2014 NEC 408.4.

BUILDING MANAGEMENT ELECTRICAL WORK NOTES:
1. PLEASE PROVIDE AN ALTERNATE PRICE TO RECYCLE CONSTRUCTION WASTE.
2. ON EACH OUTLET AND SWITCH PROVIDE A LABEL INDICATING THE CORRESPONDING PANEL AND CIRCUIT NUMBER.
3. FOR ALL NEW WORK REVIEW THE EXISTING CONDITIONS THOROUGHLY AND IDENTIFY ANY DEFICIENT WIRING OR POOR WORKMANSHIP AND ANY CIRCUITS THAT FEED MULTIPLE TENANT SPACES. INFORM THE OWNER OF ANY SUCH CONDITIONS AND PROVIDE AN ESTIMATE TO CORRECT OR MAKE ADDITIONAL IMPROVEMENTS.

Install electrical connections per 2014 NEC 110.14, identify disconnects per 2014 NEC 110.22 and provide working space around electrical equipment per 2014 NEC 110.26.

Provide a grounded electrode system bonded to the service equipment enclosure, grounded conductors, and grounded electrode conductors per 2014 NEC 250.50 and 250.104.

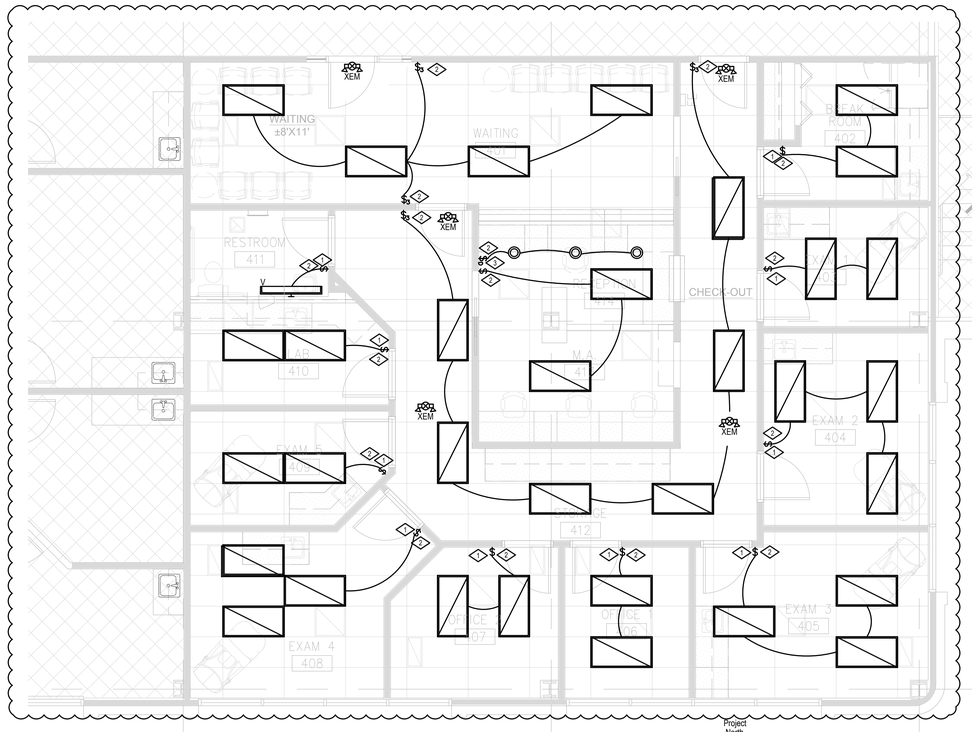

2 / E1.0 LIGHTING PLAN
SCALE: 1/4" = 1'-0"

Project North

Wiring in air handling spaces must comply with 2014 NEC 300.22. Firestop penetrations per 2014 NEC 300.21. Secure and support equipment per 2014 NEC 300.11.

POWER PLAN GENERAL NOTES:
1. PROVIDE OUTLET WITHIN 25' OF EQUIPMENT IN ACCORDANCE WITH NEC 210-63. PROVIDE WEATHERPROOF GFI OUTLET ON ROOFTOPS WITHIN 25' OF ROOFTOP EQUIPMENT.
2. FIELD VERIFY FINAL LOCATION OF ALL EQUIPMENT WITH PROVIDER PRIOR TO ROUGH-IN.
3. ALL RECEPTACLES IN BATHROOMS, KITCHENS, ROOFTOPS, OUTDOORS, AND WITHIN 6FT. OF A SINK SHALL BE GFCI (OR SERVED BY A GFI CIRCUIT BREAKER) PER NEC 210.8(B). THE E.C. SHALL PROVIDE GFCI OUTLETS (OR CIRCUIT BREAKERS) IN ALL LOCATIONS REQUIRED BY THE NEC.
4. PROVIDE CONNECTION TO TENANT SIGN. FIELD VERIFY ELECTRICAL REQUIREMENTS AND FINAL LOCATION WITH PROVIDER, TENANT AND LANDLORD. PROVIDE PHOTOCELL ON/TIMECLOCK OFF CONTROLS. PROVIDE ALL COMPONENTS REQUIRED FOR A COMPLETE INSTALLATION.
5. NUMBERS NEXT TO DEVICES REFER TO CIRCUIT DESIGNATION IN PANEL 'L4B' UNLESS NOTED.
6. ALL TELE/DATA LOCATIONS SHALL INCLUDE 4" SQUARE J-BOX AND 3/4" CONDUIT TO CEILING SPACE. ALL TELEPHONE/DATA CABLE IS TO BE PLENUM RATED WIRE OR SHALL BE INSTALLED IN CONDUIT ABOVE CEILING OR IN WALLS.
7. PROVIDE ALL DEMOLITION WORK AS REQUIRED TO ACCOMMODATE THE NEW WORK AS INDICATED ON THE ELECTRICAL PLANS. FIELD VERIFY EXISTING CONDITIONS. PROVIDE ANY ADDITIONAL WORK NECESSARY AS REQUIRED TO PRESERVE EXISTING DEVICES AND BRANCH CIRCUIT COMPONENTS TO REMAIN. REFER TO THE ARCHITECTURAL PLANS FOR DEMOLITION SCOPE OF WORK AND VISIT THE SITE PRIOR TO BID TO DETERMINE THE ELECTRICAL SCOPE OF WORK REQUIRED.
5. FIRE ALARM DEVICES - PROVIDE NEW DEVICES WHERE REQUIRED AND PROVIDE ALL WORK REQUIRED TO RELOCATE EXISTING DEVICES TO BE RE-USED. COORDINATE REQUIREMENTS WITH BUILDING OWNER FOR ANY SYSTEM DISRUPTION, REMOVAL, SALVAGE AND RE-USE OF EXISTING DEVICES. WORK SHOWN IS FOR GENERAL INFORMATION ONLY - FIRE ALARM WORK SHALL BE DESIGN-BUILD - PROVIDE ALL WORK REQUIRED FOR A COMPLETE INSTALLATION.
6. HEALTHCARE CABLE - PROVIDE APPROVED HEALTHCARE FACILITY HCF CABLE OR EQUAL INSULATED GROUND AND METAL RACEWAY WIRING SYSTEM FOR ALL PATIENT CARE AREAS IN ACCORDANCE WITH NEC 517 AND BUILDING STANDARD WIRING REQUIREMENTS.
7. HOSPITAL GRADE RECEPTACLES - ALL OUTLETS SHALL BE HOSPITAL GRADE TO MATCH THE BUILDING STANDARDS UNLESS OTHERWISE ACCEPTED IN WRITING BY THE BUILDING OWNER AND TENANT.
8. BUILDING STANDARDS - PROVIDE ALL WORK IN ACCORDANCE WITH THE BUILDING STANDARDS INCLUDING BUT NOT LIMITED TO LIGHT FIXTURES, EGRESS LIGHTING, EXIT SIGNS, FIRE ALARM DEVICES, SWITCHES, RECEPTACLES, HOSPITAL GRADE RECEPTACLES, COVERPLATES, RACEWAYS AND BRANCH CIRCUIT WIRING. FIELD VERIFY REQUIREMENTS WITH BUILDING OWNER.

2 POWER PLAN KEYED NOTES:
1. RELOCATE DEVICE - EXTEND EXISTING BRANCH CIRCUIT TO NEW DEVICE LOCATION AS INDICATED. MAINTAIN EXISTING CIRCUIT CONNECTION. PROVIDE ALL WORK REQUIRED FOR A COMPLETE INSTALLATION.
2. OFFICE EQUIPMENT - PROVIDE DEDICATED CIRCUIT WITH DEDICATED GROUND AND NEUTRAL CONDUCTOR. FIELD VERIFY FINAL LOCATION, MOUNTING HEIGHT, ELECTRICAL REQUIREMENTS, NUMBER OF WIRES, OUTLET TYPE AND CONFIGURATION WITH PROVIDER PRIOR TO ROUGH-IN.
3. TELEPHONE BOARD LOCATION (TTB) - THE E.C. SHALL PROVIDE AND INSTALL ¾"x48"x48" PLYWOOD BACKBOARD, INSTALL TIGHT TO CEILING AND PAINT TO MATCH WALL. PROVIDE A 2"C WITH PULL STRING BACK TO THE BUILDING TELEPHONE/ DATA SERVICE ENTRANCE. PROVIDE DEDICATED NEMA 5-20R RECEPTACLE +84"AFF ON TTB AND CIRCUIT AS SHOWN. FIELD VERIFY LOCATION, MOUNTING HEIGHT AND REQUIREMENTS WITH TENANT PRIOR TO BID OR ANY WORK.
4. IT EQUIPMENT - PROVIDE DEDICATED CIRCUIT WITH DEDICATED GROUND AND NEUTRAL CONDUCTOR. FIELD VERIFY FINAL LOCATION, MOUNTING HEIGHT, ELECTRICAL REQUIREMENTS WITH EQUIPMENT PROVIDER PRIOR TO ROUGH-IN.
5. RECEPTION DESK - PROVIDE OUTLETS FOR POWER AND DATA IN MILLWORK AS REQUIRED. FIELD VERIFY CONDUIT ROUTING AND J-BOX LOCATIONS WITH MILLWORK PROVIDER AND TENANT PRIOR TO ANY ROUGH-IN. FIELD VERIFY DATA J-BOX AND RACEWAY REQUIREMENTS WITH TENANT IT REPRESENTATIVE.
6. DENTAL OFFICE EQUIPMENT - PROVIDE DEDICATED CIRCUIT WITH DEDICATED GROUND AND NEUTRAL CONDUCTOR. FIELD VERIFY FINAL LOCATION, MOUNTING HEIGHT, ELECTRICAL REQUIREMENTS, NUMBER OF WIRES, OUTLET TYPE AND CONFIGURATION WITH PROVIDER PRIOR TO ROUGH-IN.
7. CONNECT TO NEAREST 120 V NON-SWITCHED CIRCUIT THAT IS NOT CONNECTED TO IT EQUIPMENT.

1 / E1.0 POWER PLAN
SCALE: 1/4" = 1'-0"

Project North

City of Aurora Building Division
Reviewed for Code Compliance
Approved as Noted: John Eckert
Date: Jul 15, 2016
2015 INTERNATIONAL CODES & 2014 NEC

RSN: 1129333
Permit #: 2016 1136607

WARE MALCOMB
Leading Design for Commercial Real Estate
architecture
planning
interiors
graphics
site development
6251 greenwood plaza boulevard
building 6, suite 100
greenwood village, colorado 80111
p 720.488.2626 f 720.488.2625

Colorado Registered Professional Engineer Carl Gutwald 34235 JUN 28 2016

Front Range Electrical Engineering
3333 S. Wadsworth Blvd. Suite D335, Lakewood, CO 80227
Fax: 720.638.8870 Ph: 303.985.0548

SPEC SUITE
1411 S. POTOMAC ST, SUITE 440
AURORA, CO

POWER PLAN AND LIGHTING PLAN

DATE	REMARKS
12/18/15	CONSTRUCTION
6/28/16	LIGHTING REVISIONS

PE:	CLF
DRAWN BY:	DMK
JOB NO.:	DEN15-6178-00 15-292

SHEET
E1.0

THESE DRAWINGS AND SPECIFICATIONS ARE THE PROPERTY AND COPYRIGHT OF WARE MALCOMB AND SHALL NOT BE USED ON ANY OTHER WORK EXCEPT BY AGREEMENT WITH WARE MALCOMB. WRITTEN DIMENSIONS SHALL TAKE PRECEDENCE OVER SCALED DIMENSIONS AND SHALL BE VERIFIED ON THE JOB SITE. ANY DISCREPANCY SHALL BE BROUGHT TO THE NOTICE OF WARE MALCOMB PRIOR TO THE COMMENCEMENT OF ANY WORK.

D:\Dropbox (FREE)\FREE\2015\2015-292 1411 S Potomac Suite 440\E Sheet Set 2015-292 1411 S Potomac Suite 440- WareMalcomb-CBRE.dwg

Tue, 28 Jun 2016