Provide a full-size set of legible APPROVED construction documents on site PRINTED IN COLOR for review by inspector.

PLAN CHANGES WILL REQUIRE AN APPROVED REVISION BEFORE INSPECTION CAN BE APPROVED

Code violations that are found during inspections are required to be corrected. Permit issuance does not grant approval of a code violation.

Structural plan review is limited to a general survey for code compliance. No review is implied nor was undertaken to verify structural adequacy.

This plan is reviewed to **IBC** but the existing building is NOT converted to **IBC**. The construction type listed is **UBC.** Occupancy group is **IBC.**

3rd party inspection is required for welding. Submit inspection letters to the City of Aurora Building Division inspector.

City of Aurora Building Division
Project: *AHU REPLACEMENT*
Address: *1501 S POTOMAC ST*
Occupancy Group: *IBC I-2*
Construction Type: *UBC Type I-F.R. - SPK*
RSN: *1940718*
Permit: *2025 2572466*

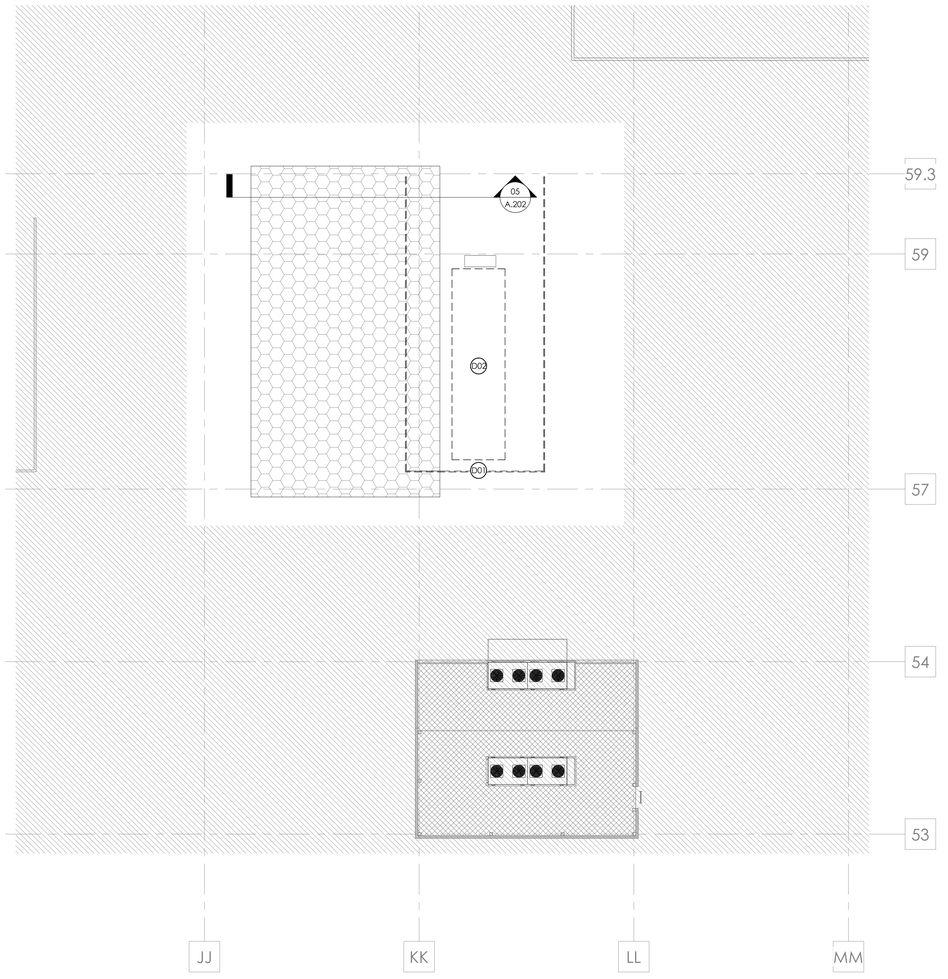

01 - DEMOLITION ROOF PLAN
1/8" = 1'-0"

DEMOLITION GENERAL NOTES

1. THESE DRAWINGS HAVE BEEN DEVELOPED FROM EXISTING DRAWINGS, WHICH MAY NOT REFLECT ACTUAL FIELD CONDITIONS. VERIFY THESE DRAWINGS WITH EXISTING FIELD CONDITIONS AND NOTIFY THE ARCHITECT IMMEDIATELY OF INCONSISTENCIES BEFORE PROCEEDING WITH CONSTRUCTION.
2. COORDINATE WITH THE OWNER ANY ITEMS TO BE STORED AND/OR RELOCATED.
3. SEE, MECHANICAL, PLUMBING, AND ELECTRICAL DRAWINGS FOR DEMOLITION OF UTILITIES.
4. DEMOLITION WORK SHALL BE EXECUTED IN CONFORMANCE WITH ALL CODES AND AS SET FORTH BY ALL GOVERNING AUTHORITIES.
5. BRACE ALL EXISTING STRUCTURES OR STRUCTURAL ELEMENTS AS NECESSARY DURING DEMOLITION.
6. DO NOT CUT ANY STRUCTURAL WORK WITHOUT PRIOR APPROVAL FROM THE STRUCTURAL ENGINEER.
7. THE EXISTING BUILDING ENVELOPE SHALL BE MAINTAINED IN A WATER TIGHT CONDITION AT ALL TIMES.
8. REPLACE OR REPAIR ANY EXISTING TO REMAIN FINISHES WHICH ARE DAMAGED DURING DEMOLITION, SUCH AS CEILING GRID, CEILING TILE, WALL COVERING, AND FLOOR COVERING.
9. NOTIFY THE DESIGN TEAM IMMEDIATELY IF THE REMOVAL OF MECHANICAL EXISTING TO REMAIN ELECTRICAL, PLUMBING SYSTEMS OR COMPONENTS WILL ADVERSELY AFFECT THE OPERATION OF MEP SYSTEM OUTSIDE THE LIMIT OF EXISTING TO BE REMOVED - RE: NOTE 5 OF DEMOLITION GENERAL NOTES.
10. SCHEDULE ALL DEMOLITION WITH THE OWNER.

DEMOLITION LEGEND

- EXISTING PARTITION TO REMAIN
- EXISTING PARTITION TO BE REMOVED
- OUT OF SCOPE
- SALVAGE AND STORE EXISTING ROOF GRAVEL. DO NOT PILE UP ON ROOF. RE: STRUCTURAL

This sheet of drawings has not been reviewed for code compliance.

DEMOLITION KEYNOTES

EX01 REMOVE THE EXISTING SCREEN WALL INCLUDING THE STRUCTURAL MEMBERS PRIOR TO NEW AHU PLATFORM. RE: STRUCTURAL.

EX02 RE: MEP ON REMOVAL OF EXISTING AHU AFTER NEW AHU IS INSTALLED ON NEW PLATFORM.

Salas O'Brien
salasobrien.com
Greenwood Village
9250 East Costilla Avenue, Suite 220
Greenwood Village, CO 80112
Registration:

CONFIDENTIAL
THIS DRAWING AND ASSOCIATED DESIGN ELEMENTS ARE CONFIDENTIAL AND THE PROPERTY OF SALAS O'BRIEN, WHICH RETAINS ALL COMMON LAW, COPYRIGHT, STATUTORY AND OTHER RIGHTS THERETO. ANY REPRODUCTION OR OTHER USE IN WHOLE OR IN SECTION IS PROHIBITED, UNLESS OTHERWISE AGREED TO BY SALAS O'BRIEN. THIS DRAWING (AS WELL AS ANY COPIES) SHALL BE RETURNED TO SALAS O'BRIEN UPON REQUEST.

PROFESSIONAL SEAL

STATE OF COLORADO
JOHN MENNO NEU
401729
LICENSED ARCHITECT
07/18/2025

ISSUE DATE	DESCRIPTION
19 SEPTEMBER 2025	BID/PERMIT

25-021
Owner

25-021 TMCA AHU REPLACEMENT

1501 S. Potomac St.
Aurora, CO 80012

REVISIONS

Δ	DESCRIPTION	DATE
1	Preliminary City Comments	11/14/2025

CHECKED BY JMN
DRAWN BY JA,NVS

SHEET NAME

DEMOLITION ROOF PLAN

SHEET NUMBER D.001
REVISION

Autodesk Docs://051_2561-22631-00_TMCA (R AHU-15_ME_R25\25-021 TMCA AHU Replacement.rvt
9/18/2025 3:27:19 PM

RSN: 1940718 | PERMIT #2025 2572466

This page was NOT reviewed for code compliance and is for reference only.

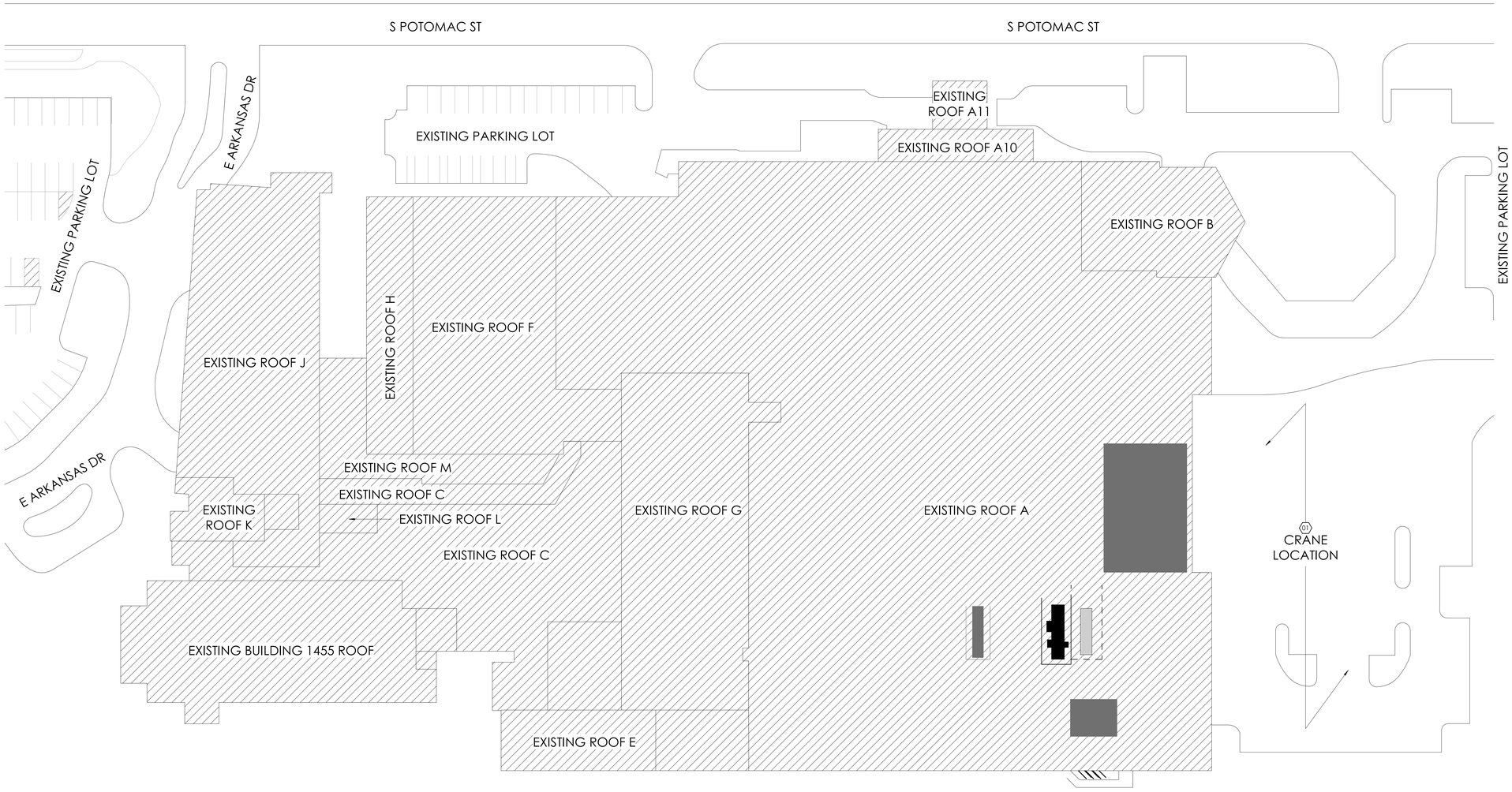

01 - SITE PLAN
1" = 30'-0"

ARCHITECTURAL SITE PLAN GENERAL NOTES

1. ARCHITECTURAL SITE PLAN IS ISSUED FOR REFERENCE ONLY.
2. REFER TO CIVIL DRAWINGS FOR ALL SITE CONSTRUCTION INFORMATION INCLUDING, BUT NOT LIMITED TO, THE FOLLOWING:
   - SITE GEOMETRY AND DIMENSIONAL CONTROL
   - SITE UTILITIES
   - SITE GRADING AND DRAINAGE
   - ASPHALT/CONCRETE PAVING DETAILS
   - PAVING MARKERS
   - CONCRETE SIDEWALK, CURB, AND GUTTER DETAILS
   - PARKING BUMPERS
   - TRAFFIC SIGNAGE
   - PAVING STRIPING AND CURB MARKINGS
   - TYPICAL HANDICAP SIGNAGE/SPACES
3. REFER TO ELECTRICAL DRAWINGS FOR SITE INFORMATION INCLUDING, BUT NOT LIMITED TO, THE FOLLOWING:
   - SITE LIGHT STANDARD LOCATIONS AND SIZES
   - ELECTRICAL SLEEVING LOCATIONS AND SIZES
   - TELEPHONE AND CABLE TV PULL BOX LOCATIONS
   - ELECTRICAL MANHOLE LOCATIONS AND DETAILS
   - PULL BOX LOCATIONS AND SIZES FOR VARIOUS SITE ELEMENTS
4. REFER TO PROJECT MANUAL FOR SITE SIGNAGE PACKAGE INFORMATION.
5. REFER TO LANDSCAPE DRAWINGS FOR ALL LANDSCAPING INFORMATION INCLUDING, BUT NOT LIMITED TO, THE FOLLOWING:
   - LANDSCAPE PLANTING AND DETAILS
   - SODDING AND SEEDING
   - LANDSCAPE BED DRAINAGE
   - HARDSCAPE LAYOUT AND DETAILS (SPECIALTY PAVING)
6. REFER TO IRRIGATION IN LANDSCAPE DRAWINGS FOR INFORMATION INCLUDING, BUT NOT LIMITED TO, THE FOLLOWING:
   - HEAD AND VALVE LOCATIONS AND SIZES
   - IRRIGATION SLEEVING LOCATIONS AND SIZES
   - IRRIGATION SYSTEM CONTROLLER LOCATION
   - DETAILS AND SPECIFICATIONS
7. THE CONTRACTOR SHALL MAINTAIN EXISTING ACCESS TO ALL EMERGENCY ENTRANCES AND SHALL NOT BLOCK ACCESS TO DRIVES AND COVERED DROP OFF AREAS. SITE WORK AND STAGING THAT AFFECT AREAS ADJACENT TO THE EMERGENCY DEPARTMENT ENTRANCE WILL REQUIRE A WRITTEN COORDINATION PLAN SUBMITTED TO AND APPROVED BY THE FACILITY.
8. CONTRACTOR SHALL INFORM THE OWNER PRIOR TO ANY SITE DEMOLITION. CONTRACTOR SHALL SCHEDULE SUCH DEMOLITION SO AS NOT TO INTERFERE WITH THE OWNER'S OPERATIONS AS OUTLINED IN AN AGREED PHASING PLAN AND SCHEDULE.

ARCHITECTURAL SITE PLAN LEGEND

- EXISTING AHU TO BE REMOVED, RE: MECH
- NEW AHU
- EXISTING AHU/PLATFORMS FOR REFERENCE
- NEW BUILDING FOOTPRINT

ARCHITECTURAL SITE PLAN KEYNOTES

01 COORDINATE CRANE SETUP LOCATION WITH OWNER

Salas O'Brien
salasobrien.com
Greenwood Village
9250 East Costilla Avenue, Suite 220
Greenwood Village, CO 80112

Registration:

CONFIDENTIAL
THIS DRAWING AND ASSOCIATED DESIGN ELEMENTS ARE CONFIDENTIAL AND THE PROPERTY OF SALAS O'BRIEN, WHICH RETAINS ALL COMMON LAW, COPYRIGHT, STATUTORY AND OTHER RIGHTS THERETO. COPYING, PUBLICATION OR DISCLOSURE OF THIS SECTION IS PROHIBITED, UNLESS OTHERWISE AGREED TO BY SALAS O'BRIEN. THIS DRAWING (AS WELL AS ANY COPIES) SHALL BE RETURNED TO SALAS O'BRIEN UPON REQUEST.

PROFESSIONAL SEAL

STATE OF COLORADO
JOHN MENNO JR.
401729
LICENSED ARCHITECT
09/18/2025

ISSUE DATE	DESCRIPTION
19 SEPTEMBER 2025	BID/PERMIT

25-021
Owner

25-021 TMCA AHU REPLACEMENT

1501 S. Potomac St.
Aurora, CO 80012

REVISIONS

Δ	DESCRIPTION	DATE
1	Preliminary City Comments	11/14/2025

CHECKED BY	DRAWN BY
JMN	JA,NVS

SHEET NAME

SITE PLAN

SHEET NUMBER	REVISION
A.001	

Autodesk Docs://061_2561-22631-00_TMCA IR AHU-15_ME_R25/25-021 TMCA AHU Replacement.rvt
9/18/2025 3:27:20 PM

RSN: 1940718 | PERMIT #2025 2572466

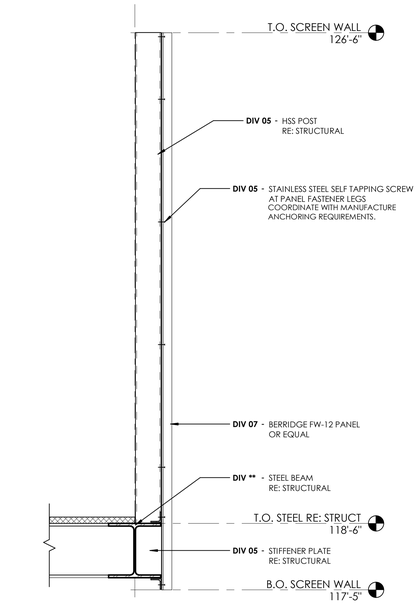

08 - MECHANICAL SCREEN WALL SECTION
1" = 1'-0"

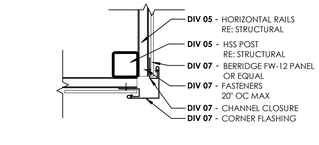

07 - SCREEN WALL - CORNER DETAIL
1" = 1'-0"

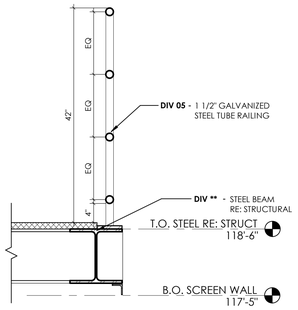

06 - HANDRAIL SECTION DETAIL
1" = 1'-0"

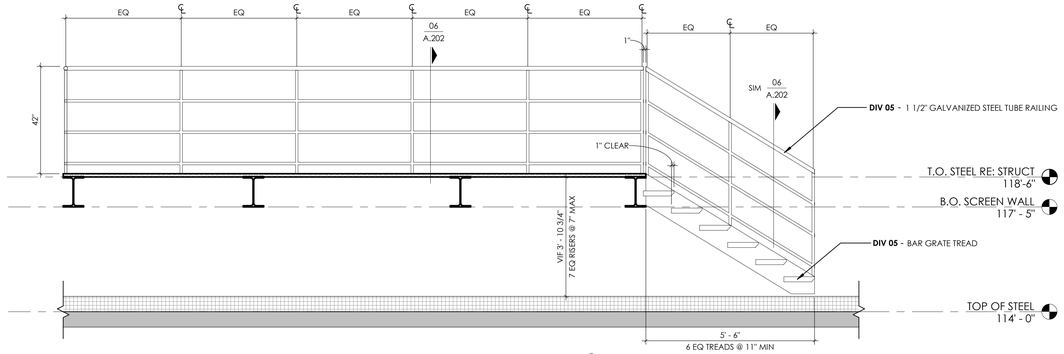

05 - SECTION @ STAIR
1/2" = 1'-0"

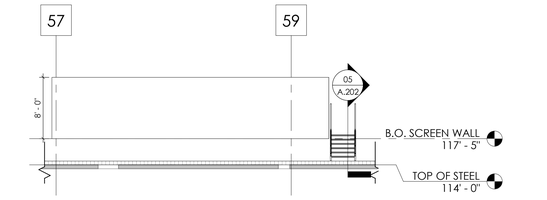

04 - SCREEN WALL ELEVATION
1/8" = 1'-0"

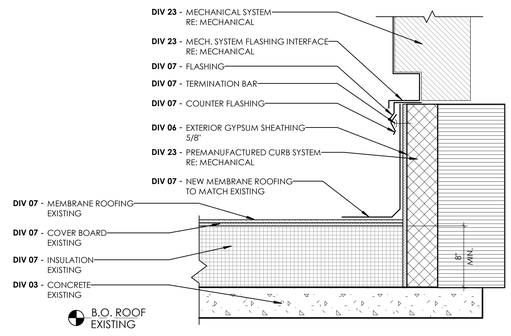

03 - SECTION DETAIL AT MECHANICAL CURB
1 1/2" = 1'-0"

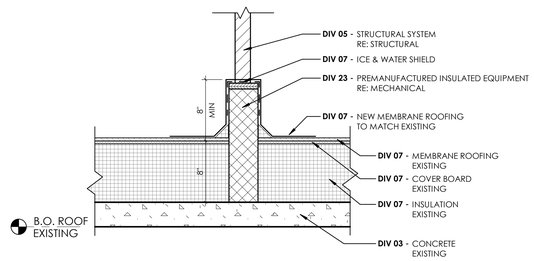

02 - SECTION DETAIL AT SUPPORT DETAIL
1 1/2" = 1'-0"

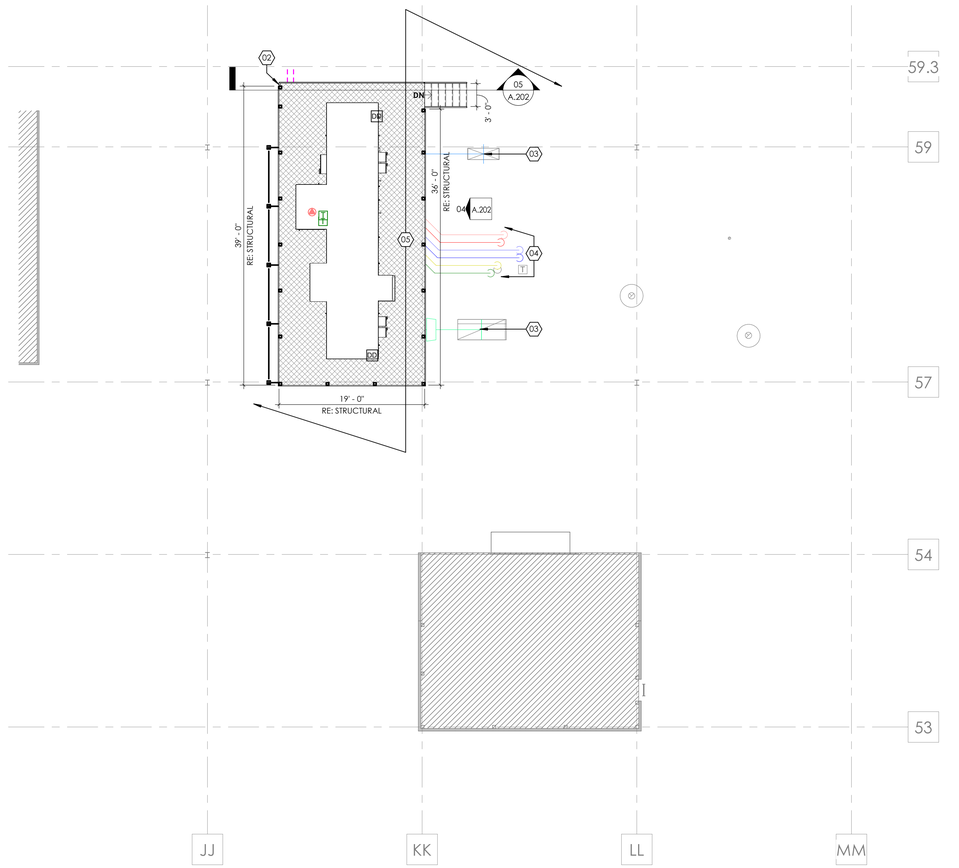

01 - ROOF PLAN
1/8" = 1'-0"

ROOF PLAN GENERAL NOTES

1. REFER TO MECHANICAL, PLUMBING, AND ELECTRICAL FOR LOCATIONS OF PIPING, CURBS, VENTS, DUCTS, FANS AND OTHER ITEMS ON THE ROOF SURFACE.
2. PAINT EXPOSED ROOF MOUNTED EQUIPMENT, PIPING, ETC EXCEPT THOSE ITEMS WHICH ARE ALUMINUM, STAINLESS STEEL, COLOR AS SELECTED BY ARCHITECT.
3. CUT EXISTING ROOF AS REQUIRED FOR NEW CONSTRUCTION. FLASH IN WITH NEW ROOFING MATERIAL TO MATCH EXSTING UNLESS OTHERWISE NOTED,COMPLY WITH ALL REQUIREMENTS OF MANUFACTURER OF EXISTING ROOF TO MAINTAIN EXISTING WARRANTY.
4. ALL ROOF FLASHING TO BE IN ACCORDANCE WITH MANUFACTUER'S RECOMMENDATIONS AND DETAILS IN COMPLIANCE WITH THE WARRANTY.
5. REFER TO PLUMBING DRAWINGS FOR ROOF DRAIN SIZES.
6. OVERFLOW ROOF DRAIN INLETS SHALL BE 2" ABOVE THE PRIMARY DRAIN INLETS.
7. REFERENCE ELECTRICAL FOR LIGHTING PROTECTION SYSTEMS.
8. REFER TO SHEET A.421 FOR TYPICAL ROOF DRAIN AND TYPICAL ROOF PIPE PENETRATION DETAILS.

ROOF PLAN LEGEND

- NEW SCREEN WALL
- EXISTING SCREEN WALL
- OUT OF SCOPE
- REINSTALL EXISTING ROOF GRAVEL. RE: STRUCTURAL.
- EXISTING AHU AND PLATFORMS, OUT OF SCOPE

ROOF PLAN KEYNOTES

01 SAFETY STAIR CROSS OVER - CFCI
BASICS OF DESIGN OR SIMILAR:
MANUFACTURE: ERECT-A-STEP
PRODUCT: NON-PENETRATING ROOFTOP SAFETY STAIR AI CROSSOVER

NOTE: FINAL LOCATION TO BE COORDINATED WITH THE OWN SIZE TO BE FIELD VERIFIED.

02 WRAP HANDRAIL TO GET WITH IN 1" OF THE NEAREST HSS COLU

03 RE: MECHANICAL FOR REUSING EXISTING ROOF PENETRATIONS REFERENCE MECHANICAL CURB DETAIL. RE: 03 / A.202

04 REPAIR AND DAMAGED ROOF PENETRATIONS AND INSTALL NE ROOF BOOTS ON ANY NEW PENETRATIONS.

05 REINSTALL ROOF GRAVEL ON ROOF AND SPREAD EVENLY TO MATCH EXISTING CONDITIONS.

City of Aurora Building Division
Reviewed for Code Compliance
Approved as Noted: Regan B
Date: Nov 14, 2025
2021 INTERNATIONAL CODES & 2023 NEC

Salas O'Brien
salasobrien.com
Greenwood Village
9250 East Costilla Avenue, Suite 220
Greenwood Village, CO 80112
Registration:

CONFIDENTIAL
THIS DRAWING AND ASSOCIATED DESIGN ELEMENTS ARE CONFIDENTIAL AND THE PROPERTY OF SALAS O'BRIEN, WHICH RETAINS ALL COMMON LAW, COPYRIGHT, STATUTORY AND OTHER RIGHTS THERETO. UNAUTHORIZED USE OR DISCLOSURE WITHOUT PERMISSION IS PROHIBITED, UNLESS OTHERWISE AGREED TO BY SALAS O'BRIEN, THIS DRAWING (AS WELL AS ANY COPIES) SHALL BE RETURNED TO SALAS O'BRIEN UPON REQUEST.

PROFESSIONAL SEAL

STATE OF COLORADO
JOHN MENNO JR
401729
LICENSED ARCHITECT
09/18/2025

ISSUE DATE	DESCRIPTION
19 SEPTEMBER 2025	BID/PERMIT

25-021
Owner

25-021 TMCA AHU REPLACEMENT

1501 S. Potomac St.
Aurora, CO 80012

REVISIONS

Δ	DESCRIPTION	DATE
1	Preliminary City Comments	11/14/2025

CHECKED BY: JMN
DRAWN BY: JA,NVS

SHEET NAME

ROOF PLAN

SHEET NUMBER: A.202
REVISION:

Autodesk Docs://061_2951-26931-00_TMCA IR AHU-15_ME_R25/25-021 TMCA AHU Replacement.rvt
9/18/2025 3:27:20 PM

GENERAL STRUCTURAL NOTES

APPLY UNLESS NOTED OTHERWISE

1.0 STRUCTURAL ENGINEERING GENERAL REQUIREMENTS:

THE SCOPE OF THE WORK DEFINED ON THESE DRAWINGS IS LIMITED TO THE NEW ROOF TOP STEEL DUNNAGE FOR THE NEW OPERATING ROOM AHU.

BUILDING CODE:

2021 EDITION OF THE INTERNATIONAL BUILDING CODE / ASCE/SEI 7-16

DESIGN CRITERIA / LOADS:

ALL COMPONENTS REQUIRING DESIGN BY THE CONTRACTOR AND THEIR SUBCONTRACTORS SHALL USE THE DESIGN CRITERIA DEFINED BELOW. ALL FORCES AND PRESSURES LISTED BELOW SHALL BE THE MINIMUM PERMISSIBLE UNLESS SUBSTANTIATING CALCULATIONS USING THE DESIGN CRITERIA SHOWN ARE PROVIDED TO THE FOR REVIEW AND ACCEPTANCE PRIOR TO FABRICATION.

RISK CATEGORY = IV

ROOF:
ROOF LIVE LOAD = 20 PSF (NON-REDUCIBLE)

SNOW:
GROUND SNOW LOAD, Pg = 40 PSF
ROOF SNOW LOAD, Pf = 32.7 PSF (NON-REDUCIBLE)
SNOW DRIFT PER ASCE-7 (Ce = 1.0, Ct = 1.0, Cs = 1.0)
IMPORTANCE FACTOR, IV = 1.2

WIND DESIGN DATA:
RISK CATEGORY = IV
ULTIMATE DESIGN WIND SPEED, Vult = 120 MPH (3 SEC. GUST)
EQUIVALENT NOMINAL DESIGN WIND SPEED, Vasd = 93 MPH (3 SEC. GUST, USING I = 1.15)
EXPOSURE C
MEAN ROOF HEIGHT USED FOR DESIGN, h = 75 FT
Kd = 0.85
Kzt = 1.0
VELOCITY PRESSURE CONSTANT = 0.8284 X 0.00256 = 0.00212 (AMBIENT AIR DENSITY ADJUSTMENT)
INTERNAL PRESSURE COEFFICIENT, GCpi = ±0.18
COMPONENTS AND CLADDING DESIGN WIND PRESSURES:

STRENGTH DESIGN: -36.2 PSF (WALL, FIELD); -44.5 PSF (WALL, CORNER);
-58.1 PSF (ROOF, ZONE 1); -76.7 PSF (ROOF, ZONE 2); -104.5 (ROOF, ZONE 3)
- (BASED ON 10 SF)
ALLOWABLE STRESS DESIGN: -21.7 PSF (WALL, FIELD); -26.7 PSF (WALL, CORNER);
-34.9 PSF (ROOF, ZONE 1); -46.0 PSF (ROOF, ZONE 2); -62.7 (ROOF, ZONE 3)
- (BASED ON 10 SF)

SEISMIC DESIGN DATA:
RISK CATEGORY = IV
SEISMIC IMPORTANCE FACTOR, Ie = 1.5
Ss = 0.199, S1 = 0.056
SITE CLASS: D
SDS = 0.212, SD1 = 0.090
SEISMIC DESIGN CATEGORY C

NON-STRUCTURAL COMPONENT SEISMIC BRACING CRITERIA: IT IS THE CONTRACTOR'S RESPONSIBILITY TO PROVIDE AND DESIGN ALL NON-STRUCTURAL COMPONENT SEISMIC BRACING FOR THE PROJECT IN ACCORDANCE WITH CHAPTER 13 OF THE ASCE 7-16. EXEMPTIONS PER SECTION 13.1.4 OF ASCE 7-16 APPLY AS FOLLOWS:

1. TEMPORARY OR MOVABLE EQUIPMENT.
2. MECHANICAL AND ELECTRICAL COMPONENTS WHERE Ip IS EQUAL TO 1.0.

REFER TO ARCHITECTURAL, MECHANICAL, ELECTRICAL AND PLUMBING DRAWINGS AND SPECIFICATIONS FOR ADDITIONAL INFORMATION, SUBMITTALS, AND REQUIREMENTS FOR NON-STRUCTURAL COMPONENTS. NON-STRUCTRAL COMPONENT SEISMIC BRACING AND ITS REQUIREMENTS SHALL BE REVIEWED BY DISCIPLINES OTHER THAN THE STRUCTURAL ENGINEER.

COORDINATION:

THESE DRAWINGS ARE A SCHEMATIC REPRESENTATION OF THE STRUCTURAL SYSTEM AND REQUIREMENTS FOR THE PROJECT, AND ARE ONLY A PORTION OF THE COMPLETE CONTRACT DOCUMENTS. THE STRUCTURAL SYSTEMS REQUIRE CAREFUL COORDINATION BETWEEN ALL STRUCTURAL COMPONENTS AND MATERIALS SHOWN IN THESE STRUCTURAL DRAWINGS, AND CAREFUL COORDINATION OF INFORMATION SHOWN ON OTHER DISCIPLINES' DRAWINGS IN ORDER TO BE CONSTRUCTED. THE CONTRACTOR SHALL COORDINATE CONSTRUCTION OPERATIONS WITH ALL SUBCONTRACTORS AND OTHER RELATED ENTITIES TO ENSURE EFFICIENT AND ORDERLY INSTALLATION OF EACH PART OF THE WORK. EACH CONTRACTOR SHALL COORDINATE ITS OPERATIONS WITH THE OPERATIONS OF OTHER CONTRACTORS FOR PROPER INSTALLATION, CONNECTION AND OPERATION.

EXISTING CONDITIONS:

CONTRACTOR SHALL VERIFY ALL EXISTING CONDITIONS PRIOR TO CONSTRUCTION. ANY VARIANCE FROM CONDITIONS SHOWN ON THESE DRAWINGS MUST BE BROUGHT TO THE ATTENTION OF THE ENGINEER IMMEDIATELY.

SHOP DRAWINGS/SUBMITTALS:

SHOP DRAWINGS SHALL BE SUBMITTED FOR ALL STRUCTURAL ITEMS IN ADDITION TO ITEMS REQUIRED BY ARCHITECTURAL SPECIFICATIONS. THE STRUCTURAL SHOP DRAWING REVIEW IS INTENDED TO HELP THE ENGINEER VERIFY THE DESIGN CONCEPT. THE CONTRACTOR SHALL REVIEW ALL SHOP DRAWINGS PRIOR TO SUBMITTAL. ITEMS NOT IN ACCORDANCE WITH CONTRACT DOCUMENTS SHALL BE IDENTIFIED UPON HIS REVIEW AND REVISED PRIOR TO FORWARDING TO ARCHITECT. THE STRUCTURAL SHOP DRAWINGS WILL BE RETURNED FOR RESUBMITTAL IF A CURSORY REVIEW SHOWS MAJOR ERRORS WHICH SHOULD HAVE BEEN FOUND BY THE CONTRACTOR'S CHECKING.

VERIFY ALL DIMENSIONS WITH ARCHITECT AND ALL FINISHED GRADE WITH CIVIL DRAWINGS.

ANY CHANGES, SUBSTITUTIONS, OR DEVIATIONS FROM CONTRACT DOCUMENTS SHALL BE CLOUDED BY MANUFACTURER OR FABRICATOR. ANY OF THE AFOREMENTIONED WHICH ARE NOT CLOUDED OR FLAGGED BY SUBMITTING PARTIES, SHALL NOT BE CONSIDERED APPROVED AFTER ENGINEER'S REVIEW, UNLESS NOTED ACCORDINGLY.

THE ENGINEER HAS THE RIGHT TO APPROVE OR DISAPPROVE ANY CHANGES TO CONTRACT DOCUMENTS AT ANY TIME BEFORE OR AFTER SHOP DRAWING REVIEW.

THE SHOP DRAWINGS DO NOT REPLACE THE CONTRACT DOCUMENTS. ITEMS OMITTED OR SHOWN INCORRECTLY AND ARE NOT FLAGGED BY THE STRUCTURAL ENGINEER OR ARCHITECT ARE NOT TO BE CONSIDERED CHANGES TO CONTRACT DOCUMENTS. IT IS THE CONTRACTOR'S RESPONSIBILITY TO MAKE SURE ITEMS ARE CONSTRUCTED TO CONTRACT DOCUMENTS.

THE ADEQUACY OF ENGINEERING DESIGNS AND LAYOUT PERFORMED BY OTHERS RESTS WITH THE DESIGNING OR SUBMITTING AUTHORITY.

REVIEWING IS INTENDED ONLY AS AN AID TO THE CONTRACTOR IN OBTAINING CORRECT SHOP DRAWINGS. RESPONSIBILITY FOR CORRECTNESS SHALL REST WITH THE CONTRACTOR.

REPRODUCTION OF ANY PORTION OF THE CONTRACT DOCUMENTS FOR USE IN SUBMITTALS IS NOT PERMITTED AND MAY RESULT IN REJECTION.

GENERAL REQUIREMENTS:

ENTIRE CONTRACT DOCUMENTS SHALL BE USED TO BUILD BUILDING. SOME CRITICAL ITEMS REQUIRED BY OTHER DISCIPLINES MAY NOT BE SHOWN ON STRUCTURAL DRAWING (i.e. WALL, FLOOR AND ROOF OPENING, ARCHITECTURAL, MECHANICAL AND PLUMBING LOADS, SUPPORT PLATES ETC.). IT IS THE CONTRACTOR'S SOLE RESPONSIBILITY TO PERFORM CAREFUL COORDINATION BETWEEN TRADES DURING CONSTRUCTION.

WHERE DISCREPANCIES OCCUR BETWEEN PLANS, DETAILS, GENERAL STRUCTURAL NOTES AND SPECIFICATIONS, THE MORE STRINGENT REQUIREMENTS SHALL GOVERN. SPECIFIC DETAILS ON DRAWINGS SHALL TAKE PRECEDENCE OVER TYPICAL DETAILS AND GENERAL STRUCTURAL NOTES. BRING ALL DISCREPANCIES TO THE ATTENTION OF THE ENGINEER IMMEDIATELY UPON DISCOVERY.

DO NOT SCALE DRAWINGS FOR THE PURPOSE OF ESTABLISHING DIMENSIONS OF ANY KIND.

ALL PROPRIETARY ITEMS, MATERIALS AND COMPONENTS SHALL BE INSTALLED IN STRICT ACCORDANCE WITH THE MANUFACTURER'S INSTRUCTIONS, GUIDELINES AND/OR RECOMMENDATIONS.

ITEMS SHOWN BY OTHER DISCIPLINES WITH REFERENCE TO STRUCTURAL DRAWING BUT NOT SHOWN ON THESE STRUCTURAL DOCUMENTS SHALL BE CONSIDERED DESIGN BUILD ITEMS AND COSTS REQUIRED FOR THESE ITEMS SHALL BE INCLUDED IN CONTRACTOR'S PRICING EXERCISES AND BID. CONTRACTOR SHALL SUBMIT DESIGN BY OTHERS FOR REVIEW.

THE STRUCTURAL CONSTRUCTION DOCUMENTS REPRESENT THE FINISHED STRUCTURE. THEY DO NOT INDICATE THE METHOD OF CONSTRUCTION. THE CONTRACTOR SHALL PROVIDE ALL MEASURES NECESSARY TO PROTECT THE STRUCTURE DURING CONSTRUCTION. SUCH MEASURES SHALL INCLUDE, BUT NOT BE LIMITED TO, BRACING, SHORING FOR LOADS DUE TO CONSTRUCTION EQUIPMENT, ETC. THE STRUCTURAL ENGINEER SHALL NOT BE RESPONSIBLE FOR THE CONTRACTOR'S MEANS, METHODS, TECHNIQUES, SEQUENCES FOR PROCEDURE OF CONSTRUCTION, OR THE SAFETY PRECAUTIONS AND THE PROGRAMS INCIDENT THERETO, NOR SHALL OBSERVATION VISITS TO THE SITE INCLUDE INSPECTION OF THESE ITEMS.

CONSTRUCTION MATERIALS SHALL BE SPREAD OUT IF PLACED ON FRAMED CONSTRUCTION. LOAD SHALL NOT EXCEED THE DESIGN LIVE LOAD PER SQUARE FOOT.

WHERE REFERENCE IS MADE TO VARIOUS TEST STANDARDS FOR MATERIALS, SUCH STANDARDS SHALL BE THE LATEST EDITION AND/OR ADDENDA.

ESTABLISH AND VERIFY ALL OPENINGS AND INSERTS FOR ARCHITECTURAL, MECHANICAL, PLUMBING AND ELECTRICAL WITH APPROPRIATE TRADES, DRAWINGS AND SUBCONTRACTORS PRIOR TO CONSTRUCTION. SHOW PENETRATIONS AND BLOCKOUT LOCATIONS ON SHOP DRAWINGS AND OTHER SUBMITTALS PRIOR TO ENGINEER'S REVIEW.

OPTIONS ARE FOR CONTRACTOR'S CONVENIENCE. IF HE CHOOSES AN OPTION, CONTRACTOR SHALL BE RESPONSIBLE FOR ALL NECESSARY CHANGES AND SHALL COORDINATE ALL DETAILS.

NOTES AND DETAILS ON DRAWINGS SHALL TAKE PRECEDENCE OVER GENERAL STRUCTURAL NOTES AND TYPICAL DETAILS. TYPICAL DETAILS MAY NOT NECESSARILY BE CUT ON PLANS, BUT APPLY UNLESS NOTED OTHERWISE. WHERE NO DETAILS ARE SHOWN, CONSTRUCTION SHALL CONFORM TO SIMILAR WORK ON THE PROJECT.

DETAILS INDICATED AS TYPICAL (i.e., TYP) APPLY TO ALL SIMILAR CONDITIONS.

SOME DETAILS ARE DEFINED AS TYPICAL TO THE PROJECT AND NOT NECESSARILY CUT OR CALLED OUT ON PLANS. IT IS THE CONTRACTOR'S RESPONSIBILITY TO APPLY AND COORDINATE THESE DETAILS WITH CONDITIONS DEFINED THROUGHOUT THE CONTRACT DOCUMENTS AS REQUIRED.

ALL DIMENSIONS SHOWN (INCLUDING ELEVATIONS) ON STRUCTURAL DRAWINGS ARE TO ASSIST CONTRACTOR IN VERIFICATION.

CONTRACTOR SHALL BE RESPONSIBLE FOR VERIFICATION OF ALL DIMENSIONS WITH ARCHITECTURAL DRAWINGS PRIOR TO START OF CONSTRUCTION – RESOLVE ANY DISCREPANCY WITH THE ARCHITECT. CONTRACTOR SHALL COORDINATE ALL FINISHED GRADE ELEVATIONS SHOWN IN CIVIL DRAWINGS WITH MINIMUM FOOTING DEPTHS SHOWN IN STRUCTURAL DRAWINGS – NOTIFY ENGINEER OF ANY DISCREPANCY PRIOR TO START OF CONSTRUCTION.

ANY ENGINEERING DESIGN, PROVIDED BY OTHERS AND SUBMITTED FOR REVIEW, SHALL BEAR THE SEAL OF AN ENGINEER REGISTERED IN THE STATE OF THE PROJECT.

SUPPLIER OF ENGINEERED STRUCTURAL COMPONENTS (i.e. STEEL JOISTS, STAIRS, PRECAST ITEMS) SHALL BE RESPONSIBLE FOR COMPLETE DESIGN AND SHALL USE ENTIRE CONTRACT DOCUMENTS TO INCLUDE ALL LOADS AND DETAIL REQUIREMENTS FROM ALL DISCIPLINES. SUPPLIER SHALL PROVIDE ADDITIONAL MATERIAL REQUIRED TO MEET ALL THEIR REQUIREMENTS FOR INSTALLATION (i.e. WIDER BEARING PLATES, SHIMS, ERECTION BOLTS ETC.).

STRUCTURAL STEEL SUPPLIER SHALL FURNISH BOLTS FOR OSHA CONNECTIONS.

SPECIAL INSPECTION:

THE OWNER SHALL EMPLOY ONE OR MORE SPECIAL INSPECTORS OR AGENCIES WHO SHALL PROVIDE INSPECTIONS DURING CONSTRUCTION FOR THE ITEMS LISTED BELOW. THE CONTRACTOR SHALL COOPERATE WITH THE SPECIAL INSPECTOR AND SHALL FURNISH TOOLS, EQUIPMENT AND ASSISTANCE AS REQUESTED. THE CONTRACTOR SHALL NOTIFY THE INSPECTOR AT LEAST 24 HOURS PRIOR TO EXPECTED TIME FOR OPERATIONS REQUIRING TESTING OR INSPECTION SERVICES. THE INSPECTOR SHALL FAMILIARIZE HIMSELF WITH ALL APPLICABLE PORTIONS OF THE CONTRACT DOCUMENTS PERTAINING TO THE AREA OF INVESTIGATION PRIOR TO PERFORMING SERVICES. COMPENSATION FOR SPECIAL INSPECTION SERVICES SHALL BE PROVIDED BY THE OWNER.

THE ENGINEER IS NOT THE SPECIAL INSPECTOR, AND SHALL NOT PERFORM THESE SERVICES.

INSPECTION BY THE OWNER OR OWNER'S AGENT DOES NOT RELIEVE THE CONTRACTOR OF HIS RESPONSIBILITY TO PERFORM THE WORK IN ACCORDANCE WITH THE CONTRACT DOCUMENTS.

PER IBC SECTION 1704, SPECIAL INSPECTION IS REQUIRED FOR THE ITEMS DEFINED IN THE SPECIAL INSPECTION MATRIX FOR EACH TYPE OF CONSTRUCTION IN THESE STRUCTURAL CONSTRUCTION DOCUMENTS.

DUTIES AND RESPONSIBILITIES OF THE SPECIAL INSPECTOR:
A) THE SPECIAL INSPECTOR SHALL OBSERVE THE WORK ASSIGNED TO BE CERTAIN IT CONFORMS WITH THE APPROVED DESIGN DRAWINGS AND SPECIFICATION.
B) THE SPECIAL INSPECTOR SHALL FURNISH INSPECTION REPORTS TO THE BUILDING OFFICIAL, AND TO THE ENGINEER OR ARCHITECT OF RECORD. ALL DISCREPANCIES SHALL BE BROUGHT TO THE IMMEDIATE ATTENTION OF THE CONTRACTOR FOR CORRECTION, THEN, IF UNCORRECTED, TO THE DESIGN AUTHORITY AND THE BUILDING OFFICIAL.
C) UPON COMPLETION OF THE WORK THE SPECIAL INSPECTOR SHALL COMPLETE AND SIGN THE APPROPRIATE FORMS CERTIFYING THAT TO THE BEST OF THEIR KNOWLEDGE THE WORK IS IN CONFORMANCE WITH THE APPROVED PLANS AND SPECIFICATIONS AND THE APPLICABLE WORKMANSHIP PROVISIONS OF THE CODE.

ALL TEST & INSPECTION REPORTS SHALL BE COPIED TO THE STRUCTURAL ENGINEER WITHIN 3 DAYS OF INSPECTION OR TEST.

5.0 METALS:

STRUCTURAL STEEL:

ALL WORK SHALL CONFORM TO THE LATEST EDITION OF AISC MANUAL OF STEEL CONSTRUCTION, AND LATEST EDITION OF AWS D1.1, UNLESS MORE STRINGENT REQUIREMENTS ARE DEFINED ELSEWHERE IN THE CONTRACT DOCUMENTS. UNLESS AN ACTIVITY OR DUTY IS SPECIFICALLY IDENTIFIED AS BEING PERFORMED BY THE PROJECT STRUCTURAL ENGINEER OF RECORD IN OSHA SUBPART R, IT WILL NOT BE PERFORMED BY THE ENGINEER. IT IS TO BE PERFORMED BY OTHERS.

ALL STRUCTURAL STEEL SHALL BE ASTM A992 (Fy = 50 KSI). ALL CHANNELS, ANGLES, AND PLATES SHALL BE ASTM A36 (Fy = 36 KSI). ALL PIPE STEEL SHALL BE ASTM A501 (Fy = 36 KSI) OR ASTM A53, TYPE E OR S, GRADE B (Fy = 35 KSI). ALL TUBE STEEL SHALL BE ASTM A500 (Fy = 46 KSI). ALL ANCHOR RODS SHALL BE ASTM F1554, GRADE 36 UNLESS NOTED OTHERWISE.

ALL REFERENCE TO HEADED STUDS SHALL BE HIGH STRENGTH HEADED STUDS. ATTACHMENT OF HEADED STUDS SHALL CONFORM TO ALL REQUIREMENTS OF THE LATEST EDITION OF THE "RECOMMENDED PRACTICES FOR STUD WELDING" AND THE "STRUCTURAL WELDING CODE" PUBLISHED BY AWS.

ALL BOLTS, ANCHOR BOLTS, EXPANSION BOLTS, ETC. SHALL BE INSTALLED WITH STEEL WASHERS AT FACE OF WOOD OR AT SLOTTED HOLES IN STEEL SECTIONS.

ALL WELDING SHALL BE PERFORMED BY WELDERS HOLDING VALID CERTIFICATES AND HAVING CURRENT EXPERIENCE IN THE TYPE OF WELD SHOWN ON THE DRAWINGS OR NOTES. CERTIFICATES SHALL BE THOSE ISSUED BY AN ACCEPTED TESTING AGENCY. ALL WELDING DONE BY E70 SERIES LOW HYDROGEN RODS UNLESS NOTED OTHERWISE. FOR GRADE 60 REINFORCING BARS, USE E90 SERIES. ALL WELDING PER LATEST AMERICAN WELDING SOCIETY STANDARDS, (EXCEPT STEEL JOISTS AND JOIST GIRDERS SHALL COMPLY WITH SJI STANDARDS). SHOP WELDS AND FIELD WELDS SHALL BE SHOWN ON THE SHOP DRAWINGS SUBMITTED FOR REVIEW. ALL FULL (COMPLETE) PENETRATION WELDS SHALL BE TESTED AND CERTIFIED BY AN INDEPENDENT TESTING LABORATORY. ALL REINFORCING STEEL WELDS SHALL BE COMPLETE JOINT PENETRATION UNLESS NOTED OTHERWISE.

FILLET WELD SIZES SHOWN IN CONTRACT DOCUMENTS ARE THE FILLET WELD LEG SIZE. GROOVE WELD SIZES SHOWN IN CONTRACT DOCUMENTS ARE THE REQUIRED WELD SIZE "(E)".

THE ENGINEER SHALL BE COMPENSATED FOR ANY ANALYSIS, RE-DESIGN AND/OR REVIEW OF CONNECTIONS NOT CONFORMING TO THE CONTRACT DOCUMENTS, WHETHER MADE BY THE CONTRACTOR, THEIR SUBCONTRACTOR(S), FABRICATOR, DETAILER OR ERECTOR.

CONTRACTOR SHALL NOT RECEIVE ADDITIONAL COMPENSATION FOR DETAILING, FABRICATION, ERECTION OR SCHEDULE IMPACTS AS A RESULT OF INCORRECT DETAILING IN THE SHOP DRAWINGS.

HIGH STRENGTH BOLTS:

ALL HIGH STRENGTH BOLTS SHALL BE ASTM 7/8" DIAMETER A325 AND SHALL BE INSTALLED AS BEARING-TYPE CONNECTIONS WITH THREADS INCLUDED IN SHEAR PLANE (I.E. A TYPE "N" CONNECTION) UNLESS NOTED OTHERWISE. UNLESS SPECIFICALLY NOTED OTHERWISE IN THESE STRUCTURAL DRAWINGS, ALL A325 HIGH STRENGTH BOLTS SHALL BE TENSIONED TO THE VALUES SHOWN IN TABLE J3.1 OF THE AISC SPECIFICATION FOR STEEL BUILDINGS, USING ANY AISC APPROVED METHOD. ALL HIGH STRENGTH BOLTING SHALL BE INSPECTED BY AN INDEPENDENT TESTING LABORATORY.

STEEL GRATING:

UNLESS NOTED OTHERWISE IN ARCHITECTURAL SPECIFICATIONS, USE GALVANIZED STEEL GRATING WITH 2-1/2" X 3/16" BEARING BARS AT 1 3/16" O.C. AND CROSS BARS AT 4" O.C. GRATING SHALL BE ERECTED AND ATTACHED PER MANUFACTURER'S RECOMMENDATIONS.

METALS SUBMITTALS:

THE FOLLOWING ITEMS SHALL BE SUBMITTED FOR REVIEW FOR THE LIMITED PURPOSE OF CHECKING FOR CONFORMANCE WITH INFORMATION GIVEN AND THE DESIGN CONCEPT EXPRESSED IN THE CONTRACT DOCUMENTS. REFER TO PROJECT SPECIFICATIONS FOR ADDITIONAL REQUIRED SUBMITTALS.

PRODUCT DATA
SHOP DRAWINGS
  STRUCTURAL STEEL
  STEEL JOIST FRAMING
  STEEL DECKING
  METAL STAIRS
WELDING PROCEDURE SPECIFICATIONS AND PROCEDURE QUALIFICATION RECORDS
QUALIFICATION DATA FOR QUALIFIED INSTALLER, FABRICATOR, PROFESSIONAL ENGINEER, TESTING AGENCY
WELDING CERTIFICATES
MILL TEST REPORTS
PRODUCT TEST REPORTS
SOURCE QUALITY CONTROL REPORTS

City of Aurora Building Division
Reviewed for Code Compliance
Approved as Noted: Regan B
Date: Nov 13, 2025
2021 INTERNATIONAL CODES & 2023 NEC

Structural plan review is limited to a general survey for code compliance. No review is implied nor was undertaken to verify structural adequacy.

ABBREVIATIONS

AFF	ABOVE FINISHED FLOOR	IFW	INSIDE FACE OF WALL
ALT	ALTERNATE	IT	PRECAST INVERTED TEE BEAM
AB	ANCHOR BOLT	K (KIP)	1000 POUNDS
ADD'L	ADDITIONAL	LB	PRECAST ELL BEAM
ARCH	ARCHITECT	LBS (#)	POUNDS
ARCH'L	ARCHITECTURAL	LL	LIVE LOAD
@	AT (MEASUREMENT)	LLH	LONG LEG HORIZONTAL
BM	BEAM	LLV	LONG LEG VERTICAL
BFF	BELOW FINISHED FLOOR	LOC	LOCATION
BOB	BOTTOM OF BEAM	LVL	LAMINATED VENEER LUMBER
BOD	BOTTOM OF DECK	MAS	MASONRY
BOF	BOTTOM OF FOOTING	MAS CJ	MASONRY CONTROL JOINT
BOT (B)	BOTTOM	MAX	MAXIMUM
BRG	BEARING	MBM	METAL BUILDING MANUFACTURER
CFS	COLD FORMED STEEL	MECH'L	MECHANICAL
CGS	CENTER OF GRAVITY STRAND	MFR('S)	MANUFACTURER('S)
CIP	CAST IN PLACE	MIN	MINIMUM
CL	CENTERLINE	MPII	MFR PRINTED INSTALLATION INSTRUCTIONS
CJ	CONTROL JOINT	N/A	NOT APPLICABLE
CJP	COMPLETE JOINT PENETRATION	NTS	NOT TO SCALE
		NSNM	NON-SHRINK NON-METALLIC
CTR'D	CENTERED	OC	ON CENTER
CLB	CENTERLINE OF BEAM	OFW	OUTSIDE FACE OF WALL
CLC	CENTERLINE OF COLUMN	OH	OPPOSITE HAND
CLF	CENTERLINE OF FOOTING	OPP	OPPOSITE
CLW	CENTERLINE OF WALL	OPNG	OPENING
CLR	CLEAR	OS	OVERSIZED
COL	COLUMN	OSB	ORIENTED STRAND BOARD
CONC	CONCRETE	PAF	POWDER ACTUATED FASTENER
CMU	CONCRETE MASONRY UNIT	PC	PRECAST CONCRETE
CONN	CONNECTION	PEMB	PRE-ENGINEERED METAL BUILDING
CONT	CONTINUOUS	PFWT	PREFABRICATED WOOD TRUSS
d	PENNY (SIZE)	PJ	PANEL JOINT
DAS	DEFORMED ANCHOR STUD	PL	PLATE
DEG	DEGREE	PLF	POUNDS PER LINEAR FOOT
DIA	DIAMETER	PLWD	PLYWOOD
DL	DEAD LOAD	PREFAB	PREFABRICATED
DP	DEEP OR DRILLED PIER	PSF	POUNDS PER SQUARE FOOT
DN	DOWN	PSI	POUNDS PER SQUARE INCH
DTL	DETAIL	PT	POST TENSION
DWG(S)	DRAWING(S)	PTL	PRESSURE TREATED LUMBER
EA	EACH	RB	PRECAST RECTANGLE BEAM
EC	EPOXY COATED	RE:	REFERENCE
EE	EACH END	REINF	REINFORCING
EL	ELEVATION	REQ'D	REQUIRED
ENGR	ENGINEER	RS	ROUGH SAWN
EOS	EDGE OF SLAB	SCHED	SCHEDULE
EQ	EQUAL	SLH	SHORT LEG HORIZONTAL
EQUIP	EQUIPMENT	SLV	SHORT LEG VERTICAL
EXIST (E)	EXISTING	SIM	SIMILAR
EXP ANCH	EXPANSION ANCHOR	SOG	SLAB ON GRADE
EXP JT (EJ)	EXPANSION JOINT	SOV	SLAB ON VOID
EW	EACH WAY	SQ	SQUARE
FDN	FOUNDATION	STD	STANDARD
FF	FINISHED FLOOR	STL	STEEL
FOM	FACE OF MEMBER	T&B	TOP AND BOTTOM
FOW	FACE OF WALL	TL	TOTAL LOAD
FP	FIRE PROOFING	TJI	PLYWOOD WEB JOIST
FTG	FOOTING	TOB	TOP OF BEAM
FV	FIELD VERIFY	TOC	TOP OF CONCRETE
GA	GAGE	TOD	TOP OF DECK
GALV	GALVANIZED	TOF	TOP OF FOOTING
GSN	GENERAL STRUCTURAL NOTES	TOL	TOP OF LEDGER
GLB (GLULAM)	GLUED-LAMINATED BEAM	TOM	TOP OF MASONRY
GT	GIRDER TRUSS	TOP	TOP OF PLATE
HC	PRECAST HOLLOW CORE PLANK	TOS	TOP OF STEEL
HDAS	HEADED ANCHOR STUD	TOW	TOP OF WALL
HDG	HOT-DIP GALVANIZED	TYP	TYPICAL
HK	HOOK	UNO	UNLESS NOTED OTHERWISE
HORIZ	HORIZONTAL	VERT	VERTICAL
HT	HEIGHT	WP	WORK POINT
		WWF	WELDED WIRE FABRIC
		W/ (w/)	WITH
		W/O (w/o)	WITHOUT

NOTES

1. FOR MATERIAL STRENGTHS, SEE GENERAL STRUCTURAL NOTES.
2. VERIFY ALL DIMENSIONS WITH ARCHITECTURAL DRAWINGS PRIOR TO START OF CONSTRUCTION - RESOLVE ANY DISCREPANCIES WITH ARCHITECT.
3. FOR CLARITY, ALL EXTERIOR SLABS AND SIDEWALKS MAY NOT BE SHOWN. FOR EXACT DIMENSIONS, LOCATIONS, JOINT AND SCORE LINES, SEE ARCHITECTURAL DRAWINGS.
4. FOR CLARITY, ALL OPENINGS MAY NOT BE SHOWN ON FRAMING PLANS. FOR EXACT SIZE, NUMBER, AND LOCATION OF OPENINGS, SEE ARCHITECTURAL, MECHANICAL, ELECTRICAL AND PLUMBING DRAWINGS. FOR FRAMING AT OPENINGS, SEE TYPICAL STRUCTURAL DETAILS. VERIFY ALL SIZES, WEIGHTS AND LOCATIONS OF MECHANICAL EQUIPMENT WITH MECHANICAL ENGINEER AND MECHANICAL CONTRACTOR THROUGH ARCHITECT.
5. DETAILS MARKED "TYPICAL" MAY NOT BE CUT ON PLANS.
6. CONC C.J. - SHALL BE EITHER KEYED OR SAW CUT CONTROL JOINT IN SLAB ON GRADE AT CONTRACTOR'S OPTION, SEE GENERAL STRUCTURAL NOTES AND PLANS.
7. MAS C.J. - PROVIDE MASONRY CONTROL JOINT IN MASONRY WALL PER G.S.N. AND TYPICAL DETAIL.
8. FOR CLARITY, DETAILS MAY SHOW ONLY ONE SIDE OF FRAMING CONDITION.
9. CONTRACTOR TO VERIFY, AND BE RESPONSIBLE FOR VARIATIONS IN CONCRETE QUANTITY DUE TO CAMBER, CONSTRUCTION DEAD LOAD DEFLECTIONS AND/OR TOLERANCES OF STRUCTURAL STEEL ELEMENTS (i.e. BEAMS, STEEL DECK, ETC.) AND PRECAST CONCRETE ELEMENTS.
10. ALL SCHEDULE MARK DESIGNATIONS MAY NOT NECESSARILY BE FOUND ON THE PLANS WHERE THE SCHEDULES OCCUR. SCHEDULES ARE TYPICAL TO THE PROJECT.

SHEET INDEX

SHEET	DESCRIPTION
S0.1	GENERAL STRUCTURAL NOTES
S0.2	STEEL SPECIAL INSPECTIONS
S1.0	STRUCTURAL PLAN
S2.0	STEEL DETAILS

MASONRY, STEEL, AND MECHANICAL SUBCONTRACTORS NOTE:
STRUCTURAL DRAWINGS DO NOT INDICATE ALL WALL, FLOOR, OR ROOF PENETRATIONS FOR MECH DUCTS, DRAINS, VENTS, ETC.; DRAWINGS INDICATE TYPICAL AND SPECIAL CONDITIONS FOR FRAMING AT THE PENETRATIONS. GENERAL CONTRACTOR AND SUB CONTRACTORS SHALL BE RESPONSIBLE FOR DETERMINING AND/OR MODIFYING OPENING LOCATIONS, ELEVATIONS, AND DIMENSIONS FOR MECH UNLESS NOTED OTHERWISE. COORDINATION TO BE COMPLETED PRIOR TO FABRICATION OF STRUCTURAL STEEL AND ROOF JOISTS.

INFORMATION ON DRAWINGS

PLAN LEGEND

SYMBOL	DESCRIPTION	REMARKS
X / X	DETAIL CUTS SHOWN ON PLANS	
	CONCRETE WALL UNO	SEE PLANS AND SCHEDULES FOR REINFORCING
	8" MASONRY WALL UNO	OTHER SIZES ARE DIMENSIONED ON PLANS.
	12" MASONRY WALL UNO	OTHER SIZES ARE DIMENSIONED ON PLANS.
	STUD WALL UNO	SEE GSN, PLANS, AND SCHEDULES FOR SIZE AND SPACING OF STUDS.
	MECHANICAL EQUIPMENT	SEE PLANS FOR UNIT WEIGHTS.
	OPENING IN FRAMING	SEE NOTE #4.
Beam Type AT XX" O.C.	INDICATES EXTENTS OF MEMBER	SEE PLANS.

Salas O'Brien
salasobrien.com
Greenwood Village
9250 East Costilla Avenue, Suite 220
Greenwood Village, CO 80112

Registration:

CONFIDENTIAL
THIS DRAWING AND ASSOCIATED DESIGN ELEMENTS ARE CONFIDENTIAL AND THE PROPERTY OF SALAS O'BRIEN, WHICH RETAINS ALL COMMON LAW, COPYRIGHT, STATUTORY AND OTHER RIGHTS THERETO. ANY UNAUTHORIZED USE, REUSE OR REPRODUCTION IS PROHIBITED. UNLESS OTHERWISE AGREED TO BY SALAS O'BRIEN, THIS DRAWING (AS WELL AS ANY COPIES) SHALL BE RETURNED TO SALAS O'BRIEN UPON REQUEST.

PROFESSIONAL SEAL

COLORADO REGISTERED PROFESSIONAL ENGINEER RUSSELL D. LEFFLER 32622
9/18/2025
Digitally signed by Russell Leffler
Reason: I am the Professional Engineer in responsible charge of, and directly responsible for this engineering work.
Date: 2025.09.18 17:42:39-06'00'

ISSUE DATE	DESCRIPTION
9/18/2025	CONSTRUCTION DOCUMENTS

2561-22631-00
THE MEDICAL CENTER OF AURORA

IR AHU-15 REPLACEMENT

1501 S. Potomac St,
Aurora, CO 80012

REVISIONS

Δ	DESCRIPTION	DATE

CHECKED BY	DRAWN BY
RL	SB

SHEET NAME
GENERAL STRUCTURAL NOTES

SHEET NUMBER: S0.1
REVISION:

Autodesk Docs://061_2561-22631-00_TMCA IR AHU-15_ME_R25/2561-22631 - TMCA - IR AHU Re (R25).rvt
9/18/2025 2:02:54 PM

RSN: 1940718 | PERMIT #2025 2572466

STRUCTURAL STEEL
REFERENCE: IBC SECTION 1705.2.1. INSPECTIONS FOR STRUCTURAL STEEL SHALL BE IN ACCORDANCE WITH QUALITY ASSURANCE REQUIREMENTS OF AISC 360, CHAPTER N.

FABRICATOR AND ERECTOR QUALITY CONTROL PROGRAM
REFERENCE AISC 360, CHAPTER N, SECTION N2

THE FABRICATOR'S QUALITY CONTROL INSPECTOR SHALL INSPECT THE FOLLOWING AS A MINIMUM, AS APPLICABLE:

1. SHOP WELDING, HIGH-STRENGTH BOLTING, AND DETAILS IN ACCORDANCE WITH AISC 360 SECTION N5.
2. SHOP CUT AND FINISHED SURFACES IN ACCORDANCE WITH AISC 360, SECTION M2.
3. SHOP HEATING FOR STRAIGHTENING, CAMBERING AND CURVING IN ACCORDANCE WITH AISC 360, SECTION M2.1.
4. TOLERANCES FOR SHOP FABRICATION IN ACCORDANCE WITH SECTION 6 OF THE CODE OF STANDARD PRACTICE.

THE ERECTOR'S QUALITY CONTROL INSPECTOR SHALL INSPECT THE AS A MINIMUM, AS APPLICABLE:

1. FIELD WELDING, HIGH-STRENGTH BOLTING, AND DETAILS IN ACCORDANCE WITH AISC 360, SECTION N5.
2. STEEL DECK AND HEADED STEEL STUD ANCHOR PLACEMENT AND ATTACHMENT IN ACCORDANCE WITH AISC 360, SECTION N6.
3. FIELD CUT SURFACES IN ACCORDANCE WITH AISC 360, SECTION M2.2.
4. FIELD HEATING FOR STRAIGHTENING IN ACCORDANCE WITH AISC 360, SECTION M2.1.
5. TOLERANCES FOR FIELD ERECTION IN ACCORDANCE WITH SECTION 7.13 OF THE CODE OF STANDARD PRACTICE.

FABRICATOR AND ERECTOR DOCUMENTS
REFERENCE AISC 360, CHAPTER N, SECTION N3

SUBMITTALS FOR STEEL CONSTRUCTION AND AVAILABLE DOCUMENTS FOR STEEL CONSTRUCTION SHALL CONFORM TO AISC 360, SECTION N3.

INSPECTION AND NONDESTRUCTIVE TESTING PERSONNEL
REFERENCE AISC 360, CHAPTER N, SECTION N4

QUALITY CONTROL INSPECTOR (FABRICATOR OR ERECTOR) QUALIFICATIONS, QUALITY ASSURANCE INSPECTOR (SPECIAL INSPECTOR) QUALIFICATIONS AND NONDESTRUCTIVE TESTING PERSONNEL (INSPECTION AGENCY PERSONNEL) QUALIFICATIONS SHALL CONFORM TO AISC 360, SECTION N4.

MINIMUM REQUIREMENTS FOR INSPECTION OF STRUCTURAL STEEL BUILDINGS
REFERENCE AISC 360, CHAPTER N, SECTION N5

QUALITY CONTROL INSPECTIONS BY THE FABRICATOR'S OR ERECTOR'S QUALITY CONTROL INSPECTOR (QCI) AND QUALITY ASSURANCE INSPECTIONS OF FABRICATED ITEMS AND THE ERECTED STEEL SYSTEM BY THE SPECIAL INSPECTOR (SI), SHALL CONFORM TO AISC 360, SECTION N5 AND TABLES N5.4-1, N5.4-2, N5.4-3, N5.6-1, N5.6-2, N5.6-3. IN THESE TABLES INSPECTION TASKS ARE AS FOLLOWS:

O-OBSERVE THESE ITEMS ON A RANDOM BASIS. OPERATIONS NEED NOT BE DELAYED PENDING THESE INSPECTIONS.
P-PERFORM THESE TASKS FOR EACH WELDED JOINT OR MEMBER.

NONDESTRUCTIVE TESTING OF WELDED JOINTS

NONDESTRUCTIVE TESTING OF WELDED JOINTS SHALL CONFORM TO AISC 360, SECTION N5 AND SHALL BE PERFORMED BY THE SPECIAL INSPECTOR (QUALITY ASSURANCE INSPECTOR) IN ACCORDANCE WITH AWSD1.1.

MINIMUM REQUIREMENTS FOR INSPECTION OF COMPOSITE CONSTRUCTION
REFERENCE AISC 360, CHAPTER N, SECTION N6

INSPECTION OF COMPOSITE CONSTRUCTION SHALL CONFORM TO AISC 360, SECTION N6 AND TABLE N6.1

INSPECTION OF FABRICATORS AND FABRICATION PROCEDURES
REFERENCE IBC SECTION 1704.2.5

INSPECTION OF FABRICATORS AND FABRICATION PROCEDURES SHALL BE PERFORMED BY THE QUALITY ASSURANCE INSPECTOR (SPECIAL INSPECTOR) AND SHALL CONFORM TO IBC SECTIONS 1704.2.5 AND 1704.2.5.1.

NONCONFORMING MATERIALS AND WORKMANSHIP
REFERENCE AISC 360, CHAPTER N, SECTION N8

IDENTIFICATION AND REJECTION OF MATERIALS OR WORKMANSHIP THAT IS NOT IN CONFORMANCE WITH THE CONSTRUCTION DOCUMENTS SHALL BE PERMITTED AT ANY TIME DURING THE PROGRESS OF THE WORK. NONCONFORMING MATERIAL AND WORKMANSHIP SHALL BE BROUGHT TO THE IMMEDIATE ATTENTION OF THE GENERAL CONTRACTOR AND THE FABRICATOR OR ERECTOR, AS APPLICABLE. NONCONFORMING MATERIAL OR WORKMANSHIP SHALL BE BROUGHT INTO CONFORMANCE, OR MADE SUITABLE FOR ITS INTENDED PURPOSE AS DETERMINED BY THE STRUCTURAL ENGINEER OF RECORD.

This sheet of drawings has not been reviewed for code compliance.

3rd party inspection is required for welding. Submit inspection letters to the City of Aurora Building Division inspector.

TABLE N5.4-1
INSPECTION TASKS PRIOR TO WELDING
REFERENCE AISC 360, CHAPTER N

INSPECTION TASKS PRIOR TO WELDING	QC		SI	
WELDING PROCEDURE SPECIFICATIONS (WPS'S) AVAILABLE	P		P	
MANUFACTURER CERTIFICATIONS FOR WELDING CONSUMABLES AVAILABLE	P		P	
MATERIAL IDENTIFICATION (TYPE/GRADE)	O		O	
WELDER IDENTIFICATION SYSTEM*	O		O	
FIT-UP OF GROOVE WELDS (INCLUDING JOINT GEOMETRY - JOINT PREPARATION - DIMENSIONS (ALIGNMENT, ROOT OPENING, ROOT FACE, BEVEL) - CLEANLINESS (CONDITION OF STEEL SURFACES) - TACKING (TACK WELD QUALITY AND LOCATION) - BACKING TYPE AND FIT (IF APPLICABLE)	O		O	
CONFIGURATION AND FINISH OF ACCESS HOLES	O		O	
FIT-UP OF FILLET WELDS - DIMENSIONS (ALIGNMENT, GAPS AND ROOT) - CLEANLINESS (CONDITION OF STEEL SURFACES) - TACKING (TACK WELDS QUALITY AND LOCATION)	O		O	
CHECK WELDING EQUIPMENT	O		-	

* THE FABRICATOR OR ERECTOR, AS APPLICABLE, SHALL MAINTAIN A SYSTEM BY WHICH A WELDER WHO HAS WELDED A JOINT OR MEMBER CAN BE IDENTIFIED. STAMPS, IF USED, SHALL BE THE LOW-STRESS TYPE.

WHERE:
O - OBSERVE THESE ITEMS ON A RANDOM BASIS. OPERATIONS NEED NOT BE DELAYED PENDING THESE INSPECTIONS.
P - PERFORM THESE TASKS FOR EACH WELDED JOINT OR MEMBER.
QC - QUALITY CONTROL INSPECTOR (FABRICATOR OR ERECTOR)
SI - SPECIAL INSPECTOR (QUALITY ASSURANCE INSPECTOR)

TABLE N5.4-2
INSPECTION TASKS DURING WELDING
REFERENCE AISC 360, CHAPTER N

INSPECTION TASKS DURING WELDING	QC		SI	
USE OF QUALIFIED WELDERS	O		O	
CONTROL AND HANDLING OR WELDING CONSUMABLES - PACKAGING - EXPOSURE CONTROL	O		O	
NO WELDING OVER CRACKED TACK WELDS	O		O	
ENVIRONMENTAL CONDITIONS - WIND SPEED WITHIN LIMITS - PRECIPITATION AND TEMPERATURE	O		O	
WPS FOLLOWED - SETTINGS ON WELDING EQUIPMENT - TRAVEL SPEED - SELECTED WELDING MATERIALS - SHIELDING GAS TYPE/FLOW RATE - PREHEAT APPLIED - INTERPASS TEMPERATURE MAINTAINED (MIN./MAX.) - PROPER POSITION (F, V, H, OH)	O		O	
WELDING TECHNIQUES - INTERPASS AND FINAL CLEANING - EACH PASS WITHIN PROFILE LIMITATIONS - EACH PASS MEETS QUALITY REQUIREMENTS	O		O	

WHERE:
O - OBSERVE THESE ITEMS ON A RANDOM BASIS. OPERATIONS NEED NOT BE DELAYED PENDING THESE INSPECTIONS.
P - PERFORM THESE TASKS FOR EACH WELDED JOINT OR MEMBER.
QC - QUALITY CONTROL INSPECTOR (FABRICATOR OR ERECTOR)
SI - SPECIAL INSPECTOR (QUALITY ASSURANCE INSPECTOR)

TABLE N5.4-9
INSPECTION TASKS AFTER WELDING
REFERENCE AISC 360, CHAPTER N

INSPECTION TASKS AFTER WELDING	QC		SI	
WELDS CLEANED	O		O	
SIZE, LENGTH AND LOCATION OF WELDS	P		P	
WELDS MEET VISUAL ACCEPTANCE CRITERIA - CRACK PROHIBITION - WELD/BASE-METAL FUSION - CRATER CROSS SECTION - WELD PROFILES - WELD SIZE - UNDERCUT - POROSITY	P		P	
ARC STRIKES	P		P	
K-AREA*	P		P	
BACKING REMOVED AND WELD TABS REMOVED (IF REQUIRED)	P		P	
REPAIR ACTIVITIES	P		P	
DOCUMENT ACCEPTANCE OR REJECTION OF WELDED JOINT OF MEMBER	P		P	

* WHEN WELDING OF DOUBLER PLATES, CONTINUITY PLATES OR STIFFENERS HAS BEEN PERFORMED IN THE K-AREA, VISUALLY INSPECT THE WEB K-AREA FOR CRACKS WITHIN 3 IN. OF THE WELD.

WHERE:
O - OBSERVE THESE ITEMS ON A RANDOM BASIS. OPERATIONS NEED NOT BE DELAYED PENDING THESE INSPECTIONS.
P - PERFORM THESE TASKS FOR EACH WELDED JOINT OR MEMBER.
QC - QUALITY CONTROL INSPECTOR (FABRICATOR OR ERECTOR)
SI - SPECIAL INSPECTOR (QUALITY ASSURANCE INSPECTOR)

TABLE N5.6-1
INSPECTION TASKS PRIOR TO BOLTING
REFERENCE AISC 360, CHAPTER N

INSPECTION TASKS PRIOR TO BOLTING	QC		SI	
USE OF QUALIFIED WELDERS	O		P	
FASTENERS MARKED IN ACCORDANCE WITH ASTM REQUIREMENTS	O		O	
PROPER FASTENERS SELECTED FOR THE JOINT DETAIL (GRADE, TYPE, BOLT LENGTH IF THREADS ARE TO BE EXCLUDED FROM SHEAR PLANE)	O		O	
PROPER BOLTING PROCEDURE SELECTED FOR JOINT DETAIL	O		O	
CONNECTING ELEMENTS, INCLUDING THE APPROPRIATE FAYING SURFACE CONDITION AND HOLE PREPARATION, IF SPECIFIED, MEET APPLICABLE REQUIREMENTS	O		O	
PRE-INSTALLED VERIFICATION TESTING BY INSTALLATION PERSONNEL OBSERVED AND DOCUMENTED FOR FASTENER ASSEMBLIES AND METHOD USED	P		O	
PROPER STORAGE PROVIDED FOR BOLTS, NUTS, WASHERS AND OTHER FASTENER COMPONENTS	O		O	

WHERE:
O - OBSERVE THESE ITEMS ON A RANDOM BASIS. OPERATIONS NEED NOT BE DELAYED PENDING THESE INSPECTIONS.
P - PERFORM THESE TASKS FOR EACH WELDED JOINT OR MEMBER.
QC - QUALITY CONTROL INSPECTOR (FABRICATOR OR ERECTOR)
SI - SPECIAL INSPECTOR (QUALITY ASSURANCE INSPECTOR)

TABLE N5.6-2
INSPECTION TASKS DURING BOLTING
REFERENCE AISC 360, CHAPTER N

INSPECTION TASKS DURING BOLTING	QC		SI	
FASTENER ASSEMBLIES, OF SUITABLE CONDITION, PLACED IN ALL HOLES AND WASHERS (IF REQUIRED) ARE POSITIONED AS REQUIRED	O		O	
JOINT BROUGHT TO THE SNUG-TIGHT CONDITION PRIOR TO THE PRETENSIONING OPERATION	O		O	
FASTENER COMPONENT NOT TURNED BY THE WRENCH PREVENTED FROM ROTATING	O		O	
FASTENERS ARE PRETENSIONED IN ACCORDANCE WITH RCSC SPECIFICATION, PROGRESSING SYSTEMATICALLY FROM THE MOST RIGID POINT TOWARD THE FREE EDGES	O		O	

WHERE:
O - OBSERVE THESE ITEMS ON A RANDOM BASIS. OPERATIONS NEED NOT BE DELAYED PENDING THESE INSPECTIONS.
P - PERFORM THESE TASKS FOR EACH WELDED JOINT OR MEMBER.
QC - QUALITY CONTROL INSPECTOR (FABRICATOR OR ERECTOR)
SI - SPECIAL INSPECTOR (QUALITY ASSURANCE INSPECTOR)

TABLE N5.6-3
INSPECTION TASKS AFTER BOLTING
REFERENCE AISC 360, CHAPTER N

INSPECTION TASKS AFTER BOLTING	QC		SI	
DOCUMENT ACCEPTANCE OR REJECTION OF BOLTED CONNECTIONS	P		P	

WHERE:
O - OBSERVE THESE ITEMS ON A RANDOM BASIS. OPERATIONS NEED NOT BE DELAYED PENDING THESE INSPECTIONS.
P - PERFORM THESE TASKS FOR EACH WELDED JOINT OR MEMBER.
QC - QUALITY CONTROL INSPECTOR (FABRICATOR OR ERECTOR)
SI - SPECIAL INSPECTOR (QUALITY ASSURANCE INSPECTOR)

Salas O'Brien
salasobrien.com
Greenwood Village
9250 East Costilla Avenue, Suite 220
Greenwood Village, CO 80112
Registration:

CONFIDENTIAL
THIS DRAWING AND ASSOCIATED DESIGN ELEMENTS ARE CONFIDENTIAL AND THE PROPERTY OF SALAS O'BRIEN, WHICH RETAINS ALL COMMON LAW, COPYRIGHT, STATUTORY AND OTHER RIGHTS THERETO. COPYRIGHT NOTICE DOES NOT IMPLY PUBLICATION IS PROHIBITED. UNLESS OTHERWISE AGREED TO BY SALAS O'BRIEN, THIS DRAWING (AS WELL AS ANY COPIES) SHALL BE RETURNED TO SALAS O'BRIEN UPON REQUEST.

PROFESSIONAL SEAL

COLORADO REGISTERED RUSSELL D. LEPPERT 32622 PROFESSIONAL ENGINEER

9/18/2025

ISSUE DATE	DESCRIPTION
9/18/2025	CONSTRUCTION DOCUMENTS

2561-22631-00
THE MEDICAL CENTER OF AURORA

IR AHU-15 REPLACEMENT

1501 S. Potomac St,
Aurora, CO 80012

REVISIONS

Δ	DESCRIPTION	DATE

CHECKED BY: RL
DRAWN BY: SB

SHEET NAME

STEEL SPECIAL INSPECTIONS

SHEET NUMBER: S0.2
REVISION:

Autodesk Docs://061_2561-22631-00_TMCA IR AHU-15_ME_R25/2561-22631 - TMCA - IR AHU Re (R25).rvt
9/18/2025 2:02:55 PM

RSN: 1940718 | PERMIT #2025 2572466

COLUMN SCHEDULE

MARK	SIZE	BASE PLATE THICKNESS	COMMENTS
C1	HSS5X5X1/4	N/A	
C2	HSS4X4X1/4	N/A	

BOLTED CONNECTION SCHEDULE

NOMINAL BEAM DEPTH "D"	NUMBER OF 7/8" DIA. ASTM, A325N BOLTS
UP TO 7"	2
8" - 11"	2
12" - 14"	3
15" - 17"	4
18" - 20"	5
21" - 23"	6
24" - 29"	7
30" - 32"	8
33" - 35"	9
36"	10

FRAMING NOTES:

1. THE TYPICAL STEEL BEAM TO STEEL COLUMN OR STEEL BEAM TO STEEL BEAM CONNECTION CONSISTS OF 3/8" SINGLE SHEAR PLATES WITH 7/8" DIA. ASTM A325N BOLTS. USE 5/8" SHEAR PLATES WHERE "D" = 27" OR GREATER.
2. ALL BOLTS SHALL BE INSTALLED USING SHORT SLOTTED HOLES IN EITHER THE BEAM WEB OR THE SHEAR PLATE PER LATEST AISC SPECIFICATIONS.
3. CONNECTIONS REQUIRING DOUBLE ANGLES OR BENT PLATES WILL BE MARKED ON THE PLANS WITH AN ASTERISK (*). ALL DOUBLE ANGLES SHALL BE L4x4x1/4 AND ALL BENT PLATES SHALL BE 1/4" THICK - DETAIL PER SECTION 4 OF THE AISC STEEL CONSTRUCTION MANUAL.

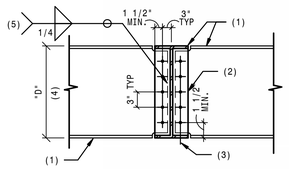

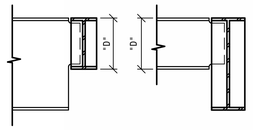

NOTE:
AT ONE SIDED CONNECTIONS, INSTALL 3/8" STIFFENER PLATE OPPOSITE SHEAR PLATE.

NOTES:

1. STEEL BEAM.
2. 3/8" STEEL SHEAR PLATE -USE 5/8" STEEL SHEAR PLATE WHERE "D" = 27" OR GREATER.
3. FOR SIZE, TYPE & NUMBER OF BOLTS, SEE TYPICAL BOLT SCHEDULE.
4. "D" = LESSER OF BEAM DEPTHS AS OCCURS.
5. WELD 3 SIDES TYPICAL - USE SAME CONNECTION AT STIFFENER PLATES WHEN REQUIRED.

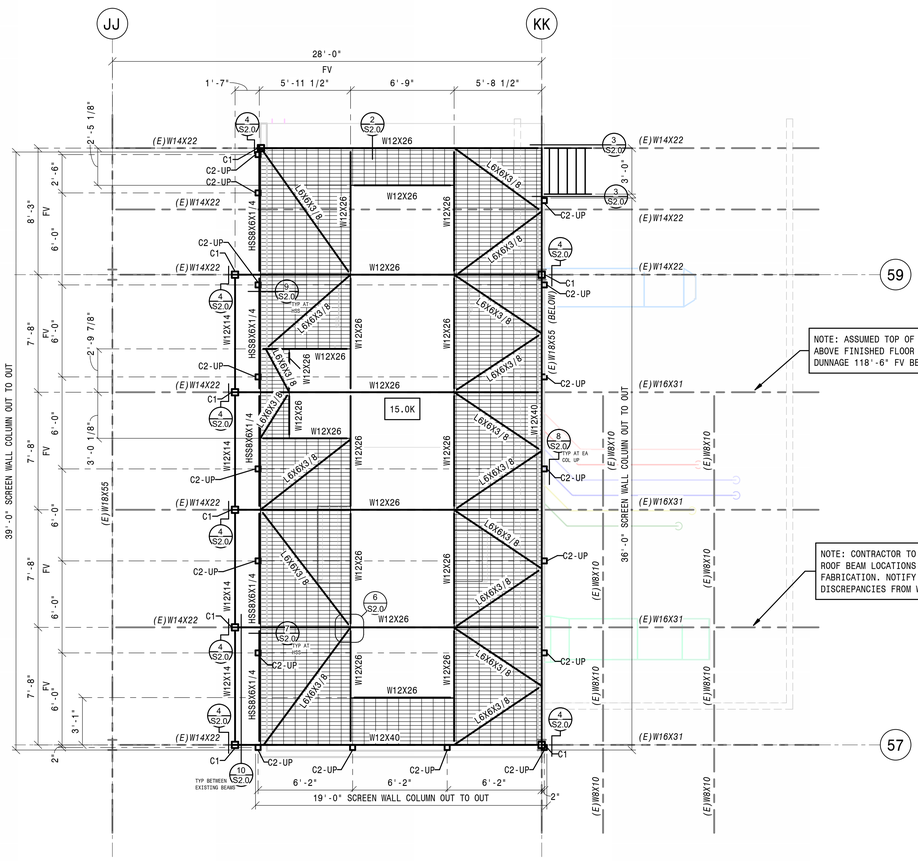

AHU FRAMING PLAN NOTES:

1. CONTRACTOR TO FIELD VERIFY EXISTING STRUCTURAL STEEL MEMBER LAYOUT AND DIMENSIONS BEFORE FABRICATION OF NEW STEEL ELEMENTS.
2. ALL NEW STRUCTURAL STEEL ELEMENTS TO BE HOT DIP GALVANIZED.
3. EQUIPMENT TO BE BOLTED TO STEEL DUNNAGE PER MFR REQUIREMENTS.
4. C1, C2, ECT - AS SHOWN ON PLAN INDICATES STEEL COLUMN. SEE COLUMN SCHEDULE FOR MORE INFORMATION. COLUMNS ARE IDENTIFIES AT EACH COLUMNS LOWEST LEVEL ONLY.
5. EQUIPMENT WEIGHTS SHOW AS XXK WHERE XX IS IN KIPS. WEIGHT SHOWN INCLUDES ALL INERTIA BASES AND/OR HOUSEKEEPING PADS. IF WEIGHT OF ACTUAL EQUIPMENT IS GREATER THAN SHOWN, OR ADDITIONAL EQUIPMENT NOT SHOWN EXISTS, NOTIFY ENGINEER IMMEDIATELY.

1-1/2"X3/16" 19-W-4 GALVANIZED SERRATED BAR GRATING. PROVIDE MIN. (4) BAR GRATING CLAMPS TO BEAMS BELOW FOR EACH STEEL GRATE SECTION.

NOTE: EQUIPMENT TO FRAMING CONNECTION BY MANUFACTURER.

NORTH

FRAMING PLAN

SCALE: 1/4" = 1'-0"

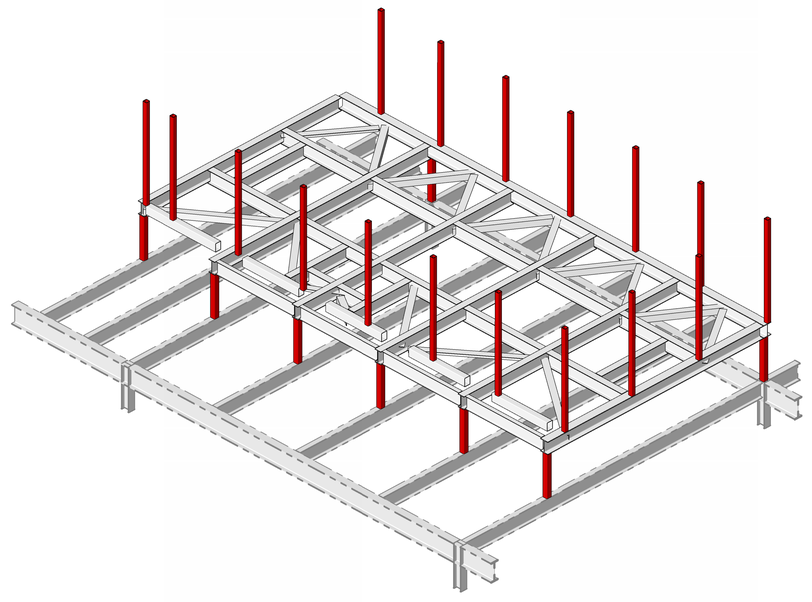

1 IR-15 DUNNAGE ISO

NO SCALE

City of Aurora Building Division
Reviewed for Code Compliance
Approved as Noted: Regan B
Date: Nov 13, 2025
2021 INTERNATIONAL CODES & 2023 NEC

Salas O'Brien
salasobrien.com
Greenwood Village
9250 East Costilla Avenue, Suite 220
Greenwood Village, CO 80112
Registration:

CONFIDENTIAL
THIS DRAWING AND ASSOCIATED DESIGN ELEMENTS ARE CONFIDENTIAL AND THE PROPERTY OF SALAS O'BRIEN, WHICH RETAINS ALL COMMON LAW, COPYRIGHT, STATUTORY AND OTHER RIGHTS THERETO. UNAUTHORIZED USE, REPRODUCTION OR DISTRIBUTION IS PROHIBITED, UNLESS OTHERWISE AGREED TO BY SALAS O'BRIEN. THIS DRAWING (AS WELL AS ANY COPIES) SHALL BE RETURNED TO SALAS O'BRIEN UPON REQUEST.

PROFESSIONAL SEAL

COLORADO REGISTERED RUSSELL G. LEFFLER 32622 ENGINEER

9/18/2025

ISSUE DATE	DESCRIPTION
9/18/2025	CONSTRUCTION DOCUMENTS

2561-22631-00
THE MEDICAL CENTER OF AURORA

IR AHU-15 REPLACEMENT

1501 S. Potomac St,
Aurora, CO 80012

REVISIONS

Δ	DESCRIPTION	DATE

CHECKED BY: RL
DRAWN BY: SB

SHEET NAME

STRUCTURAL PLAN

SHEET NUMBER: S1.0
REVISION:

Autodesk Docs://061_2561-22631-00_TMCA IR AHU-15_ME_R25/2561-22631 - TMCA - IR AHU Re (R25).rvt
9/18/2025 2:02:57 PM

RSN: 1940718 | PERMIT #2025 2572466

NOTES:
1. BEAM PER PLAN.
2. COLUMN PER PLAN.
3. HSS4x4x1/4 HORIZONTAL SUPPORT.
4. L1x1x1/8 HORIZONTAL SUPPORT.
5. 3/8" THICK FITTED SHEAR PLATE EA SIDE OF BEAM.
6. L4x3x1/4 HORIZONTAL SUPPORT.
7. 1/4" CAP PLATE SEAL WELD.
8. RE: ARCH FOR SCREEN WALL COVERING AND ATTACHMENT TO STEEL.

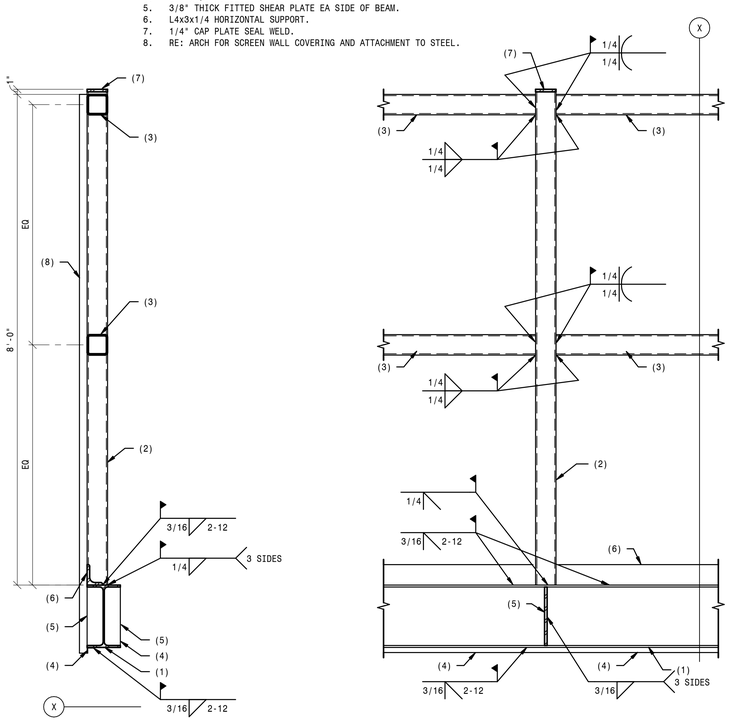

8 SCREEN WALL

NO SCALE

NOTES:
1. HSS BEAM PER PLAN.

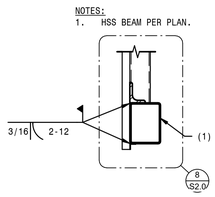

9 HSS SCREEN WALL CONNECTION

NO SCALE

NOTES:
1. (E) BEAM.
2. L4x4x3/8 ANGLE IN BEAM W/ (2) 3/4" DIA A325 THRU BOLTS TO WEB CENTERED IN LEG.
3. L3x3x1/4 BRACE W/ (1) 3/4" A325 THRU BOLT.
4. L2x4x3/8 ANGLE IN BEAM.

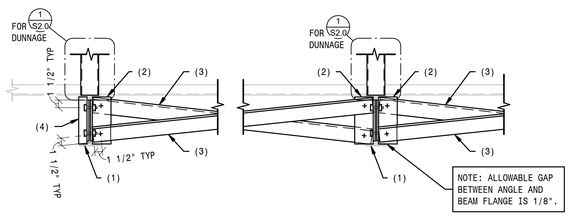

10 EXISTING STEEL BEAM BRACING BOLTED

NO SCALE

NOTES:
1. BEAM PER PLAN.
2. COLUMN PER PLAN.
3. 3/8" THICK FITTED STIFFENER PLATE EA SIDE OF BEAM. STIFFENER PLATE REQUIRED WHERE THERE IS NO BEAM CONNECTING.
4. PL3/8X5X0'-5".
5. L3X3X3/8 KICKER W/ (1) 3/4" BOLT AT EA PLATE.
6. BEAM AS OCCURS PER PLAN.

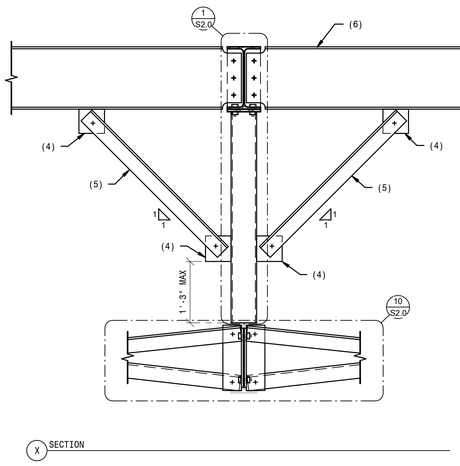

4 COLUMN BRACING

NO SCALE

NOTES:
1. AHU EQUIPMENT.
2. UNIT ANCHORAGE PER MFR.
3. STEEL BEAM PER PLAN.

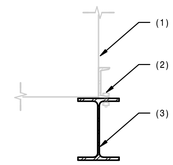

5 EQUIPMENT TO BEAM CONNECTION

NO SCALE

NOTES:
1. TOP FLANGE OF BEAM PER PLAN.
2. DIAGONAL BRACE PER PLAN.
3. 3/4" DIA THRU BOLT.

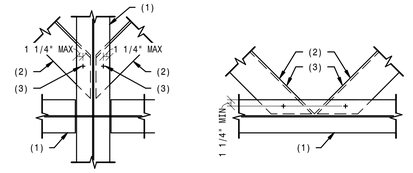

6 DIAGONAL BRACING

NO SCALE

NOTES:
1. BEAM PER PLAN.
2. 3/8" THICK FITTED SHEAR PLATE.
3. (2) 3/4" DIA A325 THRU BOLTS SPACED AS SHOWN.
4. HSS BEAM PER PLAN.

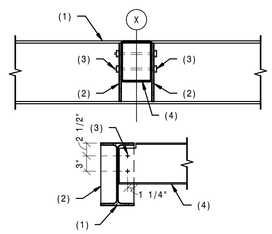

7 HSS BEAM CONNECTION TO W BEAM

NO SCALE

NOTES:
1. BEAM PER PLAN.
2. COLUMN PER PLAN.
3. CAP PL1/2x6 1/2x0'-11" W/ (4) 3/4" DIA THRU BOLTS.
4. BEAM AS OCCURS PER PLAN OR 3/8" SHEAR PLATE.
5. EXISTING ROOF MEMBRANE.
6. BEAM AS OCCURS PER PLAN.
7. FOR SIZE, TYPE AND NUMBER OF BOLTS, SEE TYPICAL BOLT SCHEDULE.
8. 1/2" STEEL PLATE.
9. ANGLE BRACING PER PLAN.

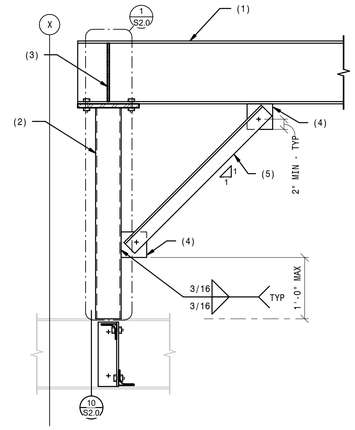

4 COLUMN BRACING

NO SCALE

NOTE: REMOVE ROOFING AND CUT HOLE THROUGH EXISTING METAL DECK TO MAKE CONNECTION TO (E) BEAMS. PATCH ROOFING TO MATCH, RE: ARCH.

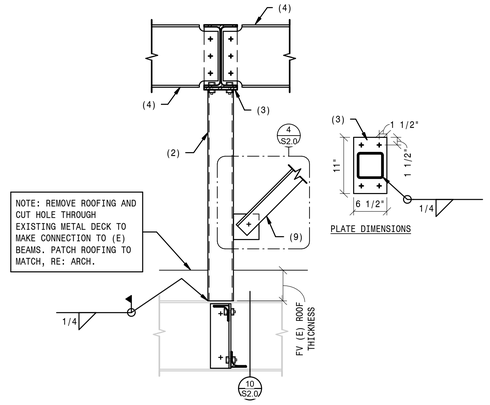

1 DUNNAGE BEAMS TO HSS

NO SCALE

NOTES:
1. BEAM PER PLAN.
2. BAR GRATING PER PLAN.
3. PL1/2x2x0'-7" W/ (2) 5/8" DIA BOLTS.

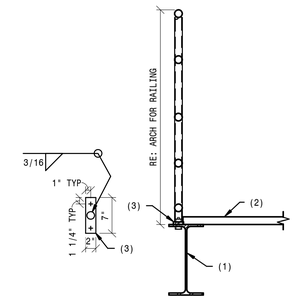

2 ROOF GUARD RAIL TO STEEL BEAM

NO SCALE

NOTES:
1. C8x11.5 STAIR STRINGER.
2. PIPE 1 1/4 STD TOP RAIL.
3. PIPE 1 1/4 STD INTERMEDIATE RAIL.
4. PIPE 1 1/4 XS POST AT 4' OC MAX.
5. 3/8" FITTED STIFFENER PLATE.
6. (E) ROOFING.

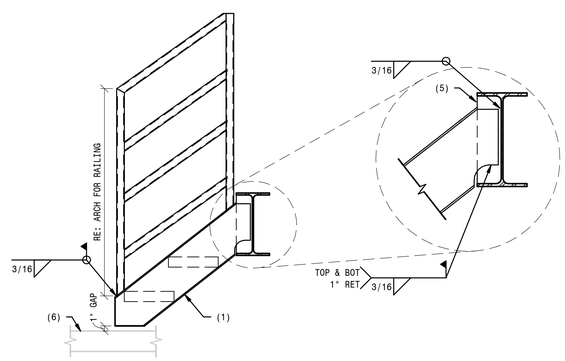

3 NEW SOUTH COOLING TOWER STAIRS

NO SCALE

City of Aurora Building Division
Reviewed for Code Compliance
Approved as Noted: Regan B
Date: Nov 13, 2025
2021 INTERNATIONAL CODES & 2023 NEC

Salas O'Brien
salasobrien.com
Greenwood Village
9250 East Costilla Avenue, Suite 220
Greenwood Village, CO 80112
Registration:

CONFIDENTIAL
THIS DRAWING AND ASSOCIATED DESIGN ELEMENTS ARE CONFIDENTIAL AND THE PROPERTY OF SALAS O'BRIEN, WHICH RETAINS ALL COMMON LAW, COPYRIGHT, STATUTORY AND OTHER RIGHTS THERETO. ANY USE, REPRODUCTION, MODIFICATION OR DISTRIBUTION IS PROHIBITED, UNLESS OTHERWISE AGREED TO BY SALAS O'BRIEN. THIS DRAWING (AS WELL AS ANY COPIES) SHALL BE RETURNED TO SALAS O'BRIEN UPON REQUEST.

PROFESSIONAL SEAL

COLORADO REGISTERED RUSSELL G. LEPPER 32622 ENGINEER
9/18/2025

ISSUE DATE	DESCRIPTION
9/18/2025	CONSTRUCTION DOCUMENTS

2561-22631-00
THE MEDICAL CENTER OF AURORA

IR AHU-15 REPLACEMENT

1501 S. Potomac St,
Aurora, CO 80012

REVISIONS

Δ	DESCRIPTION	DATE

CHECKED BY: RL
DRAWN BY: SB

SHEET NAME

STEEL DETAILS

SHEET NUMBER: S2.0
REVISION:

Autodesk Docs://061_2561-22631-00_TMCA IR AHU-15_ME_R25/2561-22631 - TMCA - IR AHU Re (R25).rvt
9/18/2025 2:02:57 PM

MECHANICAL ABBREVIATIONS

AC	AIR CONDITIONING UNIT OR AIR COMPRESSOR
ACH	AIR CHANGES PER HOUR
AD	ACCESS DOOR
AFF	ABOVE FINISHED FLOOR
AHU	AIR HANDLING UNIT
ALUM	ALUMINUM
AMP	AMPERE
AMS	AIR FLOW MEASURING STATION
AP	ACCESS PANEL
APD	AIR PRESSURE DROP
ARCH	ARCHITECT/ARCHITECTURAL
AVG	AVERAGE
BAS	BUILDING AUTOMATION SYSTEM
BD	BALANCING DAMPER
BDD	BACK-DRAFT DAMPER
BI	BLACK IRON (KITCHEN GREASE DUCTWORK)
BHP	BRAKE HORSEPOWER
BOD	BOTTOM OF DUCT
BOP	BOTTOM OF PIPE
BTUH	BRITISH THERMAL UNIT PER HOUR
CC	COOLING COIL
CF	CUBIC FEET
CFH	CUBIC FEET PER HOUR
CFM	CUBIC FEET PER MINUTE
CO	CLEAN OUT OR CARBON MONOXIDE
CONT	CONTINUOUS, CONTINUATION
CU	CONDENSING/ER UNIT
CU FT	CUBIC FEET
CV	CONSTANT AIR VOLUME
CW	COLD WATER
DB	DRY BULB TEMPERATURE
DBA	DECIBEL LEVEL
DDC	DIRECT DIGITAL CONTROL
DE	DRYER EXHAUST
DEG.F	DEGREE FAHRENHEIGHT
DG	DOOR GRILLE
DIA	DIAMETER
DN	DOWN
DP	DIFFERENTIAL PRESSURE
DWG	DRAWING
DX	DIRECT EXPANSION
E	EXHAUST
(E)	EXISTING
EA	EACH
EAT	ENTERING AIR TEMPERATURE
EC	ELECTRICAL CONTRACTOR
ECM	ELECTRONICALLY COMMUTATED MOTOR
EER	ENERGY EFFICIENCY RATIO
EFF	EFFICIENCY
EG	ETHYLENE GLYCOL SOLUTION (% BY VOLUME)
EL/ELEV	ELEVATION
ELEC	ELECTRIC/ELECTRICAL
ENT	ENTERING
EQUIP	EQUIPMENT
ESP	EXTERNAL STATIC PRESSURE
EWT	ENTERING WATER TEMPERATURE
EXH	EXHAUST
EXT'G	EXISTING
°F	DEGREE FAHRENHEIGHT
FA	FREE AREA
FLA	FULL LOAD AMPS
FLEX	FLEXIBLE
FP	FIRE PROTECTION
FPM	FEET PER MINUTE
FPS	FEET PER SECOND
FT	FEET OR FLASH TANK
FV	FACE VELOCITY
GA	GAUGE
GAL	GALLON
GC	GENERAL CONTRACTOR
GD	GRAVITY DAMPER
GE	GENERAL EXHAUST
GEN	GENERAL
GER	GENERAL EXHAUST RISER
GPH	GALLONS PER HOUR
GPM	GALLONS PER MINUTE
HC	HEATING COIL
HCP	HEATING COIL PUMP
HORIZ	HORIZONTAL
HP	HORSEPOWER OR HEAT PUMP
HR	HOUR
HTG	HEATING
HVAC	HEATING, VENTILATION & AIR CONDITIONING
HZ	HERTZ
ID	INSIDE DIAMETER
IN OR "	INCH
IN W.C.	INCHES IN WATER COLUMN
IN W.G.	INCHES IN WATER GAUGE
KE	KITCHEN EXHAUST
KW	KILOWATT
KWH	KILOWATT HOUR
LAT	LEAVING AIR TEMPERATURE
LBS	POUNDS
LL	LOW LIMIT OR LANDLORD
LRA	LOCKED ROTOR AMPERES
LVG	LEAVING
LWT	LEAVING WATER TEMPERATURE
MAX	MAXIMUM
MBH	THOUSAND BTU PER HOUR
MD	MOTORIZED DAMPER
MFR	MANUFACTURER
MIN	MINIMUM OR MINUTE(S)
NC	NORMALLY CLOSE OR NOISE CRITERIA
NIC	NOT IN CONTACT
NK	NECK
NO	NORMALLY OPEN
NO OR #	NUMBER
NR	NOT REQUIRED
NTS	NOT TO SCALE
NV	NATURAL VENTILATION
OA	OUTSIDE AIR
OAI	OUTSIDE AIR INTAKE
OBD	OPPOSED BLADE DAMPER
OD	OUTSIDE DIAMETER
P	PUMP
PBLG	PLUMBING
PC	PLUMBING CONTRACTOR
PG	PROPYLENE GLYCOL SOLUTION (% BY VOLUME)
PRV	PRESSURE REDUCING VALVE
PSIA	POUNDS PER SQUARE INCH ABSOLUTE
PSIG	POUNDS PER SQUARE INCH GAUGE
R	RETURN
RA	RETURN AIR
REQ'D	REQUIRED
RH	RELATIVE HUMIDITY
RHC	REHEAT COIL
RO	RELIEF OPENING
RPM	REVOLUTIONS PER MINUTE
S	SUPPLY
SA	SOUND ATTENUATOR
SF	SUPPLY FAN OR SQUARE FEET
SL	SENSIBLE LOAD
SP	STATIC PRESSURE
SPECS	SPECIFICATIONS
SQ	SQUARE
SQ.FT.	SQUARE FEET
SS	STAINLESS STEEL
STD	STANDARD
STRUCT	STRUCTURE/STRUCTURAL
TD	TEMPERATURE DIFFERENCE OR TRANSFER DUCT
TE	TOILET EXHAUST
TEMP	TEMPERATURE
THRU	THROUGH
TO	TRANSFER OPENING
TSP	TOTAL STATIC PRESSURE
TYP	TYPICAL
UC	UNDER-CUT (DOOR)
UON	UNLESS OTHERWISE NOTED
V	VENT
VAV	VARIABLE AIR VOLUME
VEL	VELOCITY
VERT	VERTICAL
VFD	VARIABLE FREQUENCY DRIVE
VOL	VOLUME
W	WATT
W/	WITH
WC	WATER COLUMN
WPD	WATER PRESSURE DROP
WMS	WIRE MESH SCREEN
WT	WEIGHT

GRAPHIC LINESTYLES

- THICK, DARK SOLID LINES INDICATE NEW OR RELOCATED ITEMS
- THIN, LIGHT SOLID LINES INDICATE EXISTING ITEMS TO REMAIN IN PLACE AND BE REUSED
- THICK, SHORT DASHED LINES INDICATE EXISTING ITEMS TO BE REMOVED
- THICK, SHORT DASHED LINES WITH DIAGONAL PATTERN INDICATE EXISTING ITEMS TO BE REMOVED

IDENTIFICATION SYMBOLS

- POINT OF NEW TO EXISTING CONNECTION
- POINT OF DISCONNECT FROM EXISTING TO DEMOLISHED ITEM
- X — KEYED NOTE TAG
- X / X — EQUIPMENT TAG / EQUIPMENT TAG NO.
- X / M-X — SECTION NUMBER / DRAWING ON WHICH SECTION IS SHOWN

AIR DEVICES DATA TAG

DIFFERUSER MARK — XX (TYP. 2) — QUANTITY
350-S
AIRFLOW (CFM)
S=SUPPLY
R=RETURN
T=TRANSFER
E=EXHAUST

SENSOR SYMBOLS

T	THERMOSTAT
TC	COMBINATION; THERMOSTAT, HUMIDISTAT, CO2
H	HUMIDISTAT
CO	CARBON MONOXIDE DETECTOR
CO2	CARBON DIOXIDE DETECTOR
SD	DUCT SMOKE DETECTOR

PIPING SYSTEMS

HWS	HEATING WATER SUPPLY
HWR	HEATING WATER RETURN
CHWS	CHILLED WATER SUPPLY
CHWR	CHILLED WATER RETURN
CWS	CONDENSER WATER SUPPLY
CWR	CONDENSER WATER RETURN
LPS	LOW PRESSURE STEAM
LPC	LOW PRESSURE STEAM CONDENSATE
LTCS	LOW TEMPERATURE CHILLED WATER SUPPLY
LTCR	LOW TEMPERATURE CHILLED WATER RETURN
MPS	MEDIUM PRESSURE STEAM
MPC	MEDIUM PRESSURE STEAM CONDENSATE
CD	CONDENSATE DRAIN

DUCTWORK SYMBOLS

	SUPPLY AIR DUCT
	RETURN AIR DUCT
	EXHAUST AIR DUCT
24X12	RECTANGULAR DUCT SIZE
24Ø	ROUND DUCT SIZE
24/12	FLAT OVAL DUCT SIZE
	ELBOW TURNED DOWN
	ELBOW TURNED UP
	DUCT TRANSITION
	DUCT END CAP
	CEILING SUPPLY DIFFUSERS
	CEILING RETURN / EXHAUST DIFFUSER
	FLEXIBLE DUCT
FD	FIRE DAMPER
SD	SMOKE DAMPER
FSD	COMBINATION FIRE/SMOKE DAMPER
MD	MOTORIZED DAMPER
	MANUAL BALANCING DAMPER
	CLEAN OUT
	FLEXIBLE DUCT CONNECTION
UC/DG	DG: DOOR GRILLE UC: DOOR UNDERCUT

CONTROLS SYMBOLS

T	THERMOSTATS & CONTROLLERS
T	SENSORS & TRANSMITTERS
AI	INPUT/OUTPUT MODULES

PIPING SYMBOLS

- ELBOW TURNED UP
- ELBOW TURNED DOWN
- TEE TURNED UP
- TEE TURNED DOWN
- DIRECTION OF FLOW ARROW
- CONCENTRIC REDUCER
- ECCENTRIC REDUCER, FLAT ON BOTTOM
- ECCENTRIC REDUCER, FLAT ON TOP
- FLANGE
- FLEXIBLE CONNECTOR
- EXPANSION COMPENSATOR
- ANCHOR
- GUIDE
- CAPPED END
- CONTINUATION
- FM — FLOW METER (REFER TO SPECS FOR TYPE)
- M — METER
- SIGHT GLASS
- PIPE UNION
- T — STEAM TRAP (REFER TO SPECS FOR TYPE)
- STRAINER
- STRAINER WITH BLOWDOWN
- AUTOMATIC AIR VENT
- MANUAL AIR VENT
- FLOW SWITCH
- DP — DIFFERENTIAL PRESSURE SWITCH
- INSTRUMENT WELL
- TEMPERATURE/PRESSURE PORT (PETE'S PLUG)
- PRESSURE GAUGE WITH SHUTOFF
- THERMOMETER
- VACUUM BREAKER
- PRESSURE RELIEF VALVE
- PIPE PITCH DIRECTION
- ISOLATION VALVE (REFER TO SPECS FOR TYPE)
- BALL VALVE
- BUTTERFLY VALVE
- CHECK VALVE
- GLOBE VALVE
- TRIPLE DUTY VALVE
- BALANCING VALVE
- PRESSURE REDUCING VALVE
- DRAIN VALVE
- M — MOTORIZED, 2-WAY VALVE
- M — MOTORIZED, 3-WAY VALVE
- PNEUMATIC, 2-WAY VALVE
- S — SOLENOID, 2-WAY VALVE
- GATE VALVE

SCOPE OF WORK

- REPLACEMENT OF RTAH-15 WITH UPGRADED COMPONENTS, INCLUDING THE ADDITION OF A RETURN/RELIEF FAN.
- INSTALLATION OF NEW AHU ON NEW STRUCTURAL PLATFORM WITH NEW SCREEN WALL.
- PROVIDE HYDRONIC AND STEAM PIPING FROM EXISTING SYSTEM DISCONNECT TO NEW AHU.
- PRE-CONSTRUCTION TEST AND BALANCE OF RTAH-15 SYSTEM ASSOCIATED DIFFUSER AIRFLOWS.
- WORK SHALL BE PHASED TO MINIMIZE AHU DOWNTIME:
  1. PREPARE ROOF FOR NEW AHU INSTALLATION. REMOVE ROCK FROM ROOF AND PLACE IN A SAFE LOCATION TO BE PLACED BACK ON ROOF IN SAME LOCATION AFTER ROUGH-IN.
  2. INSTALL NEW AHU AND ROUGH-IN DUCTWORK AND PIPING.
  3. DEMOLISH EXISTING AHU AND REMOVE.
  4. CONNECT ROUGH-IN TO EXISTING SYSTEM. SYSTEM SHUTDOWN/SWITCHOVER TO OCCUR DURING THIS TIME.

CODES AND STANDARDS

2021 INTERNATIONAL BUILDING CODE (IBC)
2021 INTERNATIONAL MECHANICAL CODE (IMC)
2021 INTERNATIONAL PLUMBING CODE (IPC)
2021 INTERNATIONAL FIRE CODE (IFC)
2021 INTERNATIONAL ENERGY CONSERVATION CODE (IECC)
2021 INTERNATIONAL EXISTING BUILDING CODE (IEBC)
2021 INTERNATION FUEL GAS CODE (IFGC)
2023 NATIONAL ELECTRIC CODE (NEC)

DESIGN CRITERIA

PROJECT ELEVATION	5475 FT
SUMMER DRY BULB TEMPERATURE	91°F
SUMMER MEAN COINCIDENT WET BULB TEMPERATURE	63°F
WINTER DRY BULB TEMPERATURE	1°F

MECHANICAL SHEETS

MECHANICAL SYMBOLS, ABBREVIATIONS, & NOTES	M000
MECHANICAL SCHEDULES	M001
MECHANICAL DETAILS	M002
MECHANICAL DETAILS	M003
RTAH DETAILS	M004
MECHANICAL CONTROLS	M005
MECHANICAL CONTROLS	M006
MECHANICAL SPECIFICATIONS	M007
MECHANICAL SPECIFICATIONS	M008
MECHANICAL SPECIFICATIONS	M009
LEVEL 01 MECHANICAL VENTLATION PLAN	M101
ROOF MECHANICAL VENTLATION PLAN	M201
ROOF MECHANICAL DEMOLITION PLAN	MD201

This sheet of drawings has not been reviewed for code compliance.

Salas O'Brien
salasobrien.com
Greenwood Village
9250 East Costilla Avenue, Suite 220
Greenwood Village, CO 80112
Registration:

CONFIDENTIAL
THIS DRAWING AND ASSOCIATED DESIGN ELEMENTS ARE CONFIDENTIAL AND THE PROPERTY OF SALAS O'BRIEN, WHICH RETAINS ALL COMMON LAW, COPYRIGHT, STATUTORY AND OTHER RIGHTS THERETO. ANY UNAUTHORIZED USE, REUSE OR REPRODUCTION IS PROHIBITED. UNLESS OTHERWISE AGREED TO BY SALAS O'BRIEN, THIS DRAWING (AS WELL AS ANY COPIES) SHALL BE RETURNED TO SALAS O'BRIEN UPON REQUEST.

PROFESSIONAL SEAL
COLORADO LICENSED PROFESSIONAL ENGINEER — MICHAEL P THOMPSON — 53150

ISSUE DATE	DESCRIPTION
10/31/2025	PERMIT

2561-22631-00
THE MEDICAL CENTER OF AURORA

IR AHU-15 Replacement

1501 S. Potomac St,
Aurora, CO 80012

REVISIONS

Δ	DESCRIPTION	DATE

CHECKED BY	DRAWN BY
BH	XW, ZP

SHEET NAME

MECHANICAL SYMBOLS, ABBREVIATIONS, & NOTES

SHEET NUMBER	REVISION
M000	

Autodesk Docs://061_2561-22631-00_TMCA IR AHU-15_ME_R25/SO_2561-22631-00_TMCA IR AHU-15_ME_R25.rvt
10/31/2025 12:58:37 PM

AIR HANDLING UNIT SCHEDULE (AHU)

TAG	LOCATION	SERVICE	SUPPLY FAN DATA								RETURN FAN DATA								ELECTRICAL DATA					MIN OA CFM	HUMIDIFIER TAG(S)	COOLING COIL TAG(S)	HEATING COIL TAG(S)	FILTER % EFFICIENCY		UNIT DIMENSIONS (IN), EXCLUDING HOODS			OPERATING WEIGHT (LBS.)	MANUFACTURER	MODEL	REMARKS
			QTY OF FANS	TOTAL CFM	TSP (IN. W.C.)	ESP (IN. W.C.)	FEI	FAN TYPE	MAX RPM	BHP EA. FAN	MOTOR HP (EA.)	QTY OF FANS	TOTAL CFM	TSP (IN. W.C.)	ESP (IN. W.C.)	FEI	FAN TYPE	RPM	BHP EA. FAN	MOTOR HP	VOLTS/PH/HZ	FLA	MOP	MCA	EMERGENCY POWER					PRE	FINAL	L	W	H				
RTAH-97-15	ROOF	AREA E - IR AREA	2	12,500	6.14	2	1.22	DIRECT DRIVE	3,767	8.68	15.00	2	9,390	2.14	1	1.3	DIRECT DRIVE	1,865	2.33	3	460/3/60	46.6	60.0	50.9	YES	3110	H-15	CC-15	HC-15	60%	90%	401	81	75	12,878	YORK	XTO-75x81	ALL

REMARKS:

1. PROVIDE WITH SWITCHED INTERNAL LED LIGHTS AND CONVENIENCE OUTLETS. PROVIDE UNIT DISCONNECT TRANSFORMER TO POWER FOR ALL 120V OUTLETS AND LIGHTS.
2. EACH FAN TO BE PROVIDED WITH DEDICATED VFD. NO FACTORY PROGRAMMING AND NO BYPASS.
3. CASING SHALL BE DOUBLE WALL FOAM INJECTED WITH AN R-VALUE OF 16. CASING SHALL FOLLOW HCA DESIGN GUIDELINES REGARDING THERMAL PERFORMANCE AND OPTIONS. ALL GALVANIZED STEEL SHALL BE G90. INTERIOR CASING SHALL BE 304 STAINLESS STEEL AT THE COOLING COIL AND HUMIDIFIER.
4. INTERNAL RACEWAY FOR POWER IS REQUIRED.
5. PROVIDE WITH PIEZOMETER RINGS AT EACH FAN INLET. TCC SHALL EXTEND TUBING FROM EACH FAN'S PIEZOMETER RING TO TRANSDUCERS. EACH FAN SHALL HAVE ITS OWN TRANSDUCER WITH AN ACCURACY OF ±5%. TCC CONTROLS CONTRACTOR TO PROVIDE PARAGON CONTROLS MICROTRANS EQ TRANSDUCERS.
6. UNIT TO BE MOUNTED ON EXTENDED ROOF PLATFORM. COORDINATE PLACEMENT WITH STRUCTURAL ELEMENTS.
7. MFRS FILTERS SHALL BE FACE-LOADED. SIDE LOAD FILTERS ARE UNACCEPTABLE. ALL FILTERS SHALL BE ONE OF THE FOLLOWING SIZES: 12x24, 24x24. PREFILTERS SHALL BE 4" PLEATED. FINAL FILTERS SHALL BE 12" RIGID.
8. PROVIDE WITH INSULATED PIPING CHASE. PROVIDE WITH ACCESS DOORS. FACTORY PROVIDED ELECTRIC HEATER TO BE FIELD INSTALL AND WIRE TO FACTORY POWERED JUNCTION BOX.
9. PROVIDE 3 TOTAL SETS OF FILTERS, ONE WITH THE UNIT, ONE FOR BALANCING, AND ONE FOR FINAL TURNOVER TO THE OWNER. FINAL TURNOVER FILTERS TO BE BY CAMFIL
10. PROVIDE PARTS AND LABOR WARRANTY: 36 MONTHS FROM STARTUP.
11. PROVIDE WALL PANELS AND ACCESS DOORS THAT DEFLECT NO MORE THAN L/240 WHEN SUBJECTED TO 1.5 TIMES DESIGN STATIC PRESSURE UP TO A MAXIMUM OF +8 INCHES W.G. IN POSITIVE PRESSURE SECTIONS AND -8 INCHES W.G. IN NEGATIVE PRESSURE SECTIONS.
12. UNIT SHALL CONFORM TO ASHRAE STANDARD 111 CLASS 6 FOR CASING LEAKAGE OF NO MORE THAN 1% OF DESIGN AIRFLOW AT 1.25 TIMES DESIGN STATIC PRESSURE UP TO A MAXIMUM OF +8 INCHES W.G. IN POSITIVE PRESSURE SECTIONS AND -8 INCHES W.G. IN NEGATIVE PRESSURE SECTIONS.
13. FLOORS AND ROOFS SHALL DEFLECT NO MORE THAN L/240 WHEN SUBJECTED TO A 300 LB STATIC LOAD AT THE MID-SPAN.
14. DOOR HINGES SHALL BE INDUSTRIAL-STYLE STAINLESS STEEL THAT PERMIT 180 DEGREE SWING.
15. PROVIDE LATCHES WITH ROLLER CAM MECHANISM. KNIFE EDGE OR PAW LATCHES ARE NOT ACCEPTABLE.
16. DESIGN BHP SHALL NOT EXCEED 85% OF MOTOR HORSEPOWER OR 85% OF MAX FAN RPM. FAN MOTORS SHALL BE TEFC.
17. FANS SHALL HAVE EXTRUDED ALUMINUM AIRFOIL BLADES.
18. FACTORY PROVIDED RETURN AIR SMOKE DAMPER WITH 24V ACTUATOR. FIELD PROVIDED DUCT SMOKE DETECTOR. INTEGRATE INTO BAS AND FIRE ALARM SYSTEM.

HYDRONIC AHU COOLING COIL SCHEDULE (CC) (100% WATER)

TAG	LOCATION	TYPE	CFM	TOTAL MBH	SENS. MBH	FACE AREA (SQ FT)	MIN. TUBE DIA.	MIN. TUBE THICKNESS	CONNECTION DIA.	MAX FACE VEL (FPM)	ROWS	FPI	AIR DATA					FLUID DATA						WEIGHT (LBS)		MANUFACTURER	REMARKS
													EAT		LAT		MAX PD (IN.)	EWT °F	LWT °F	VEL (FT/S)	GPM	MAX PD (FT.)	FLUID	DRY WEIGHT	TOTAL WEIGHT		
													DB °F	WB °F	DB °F	WB °F											
CC-15	RTAH-15	FULL HEIGHT	12,500	303	303	30.0	5/8"	0.025"	2"	417	6	8	79.0	58.0	51.4	47.8	0.31	45.0	55.0	3.3	60.4	9.8	WATER	594	795	YORK	ALL

REMARKS:

1. PROVIDE ASHRAE IAQ COMPLIANT STAINLESS-STEEL-LINED DRAIN PANS AND SUPPORTS.
2. COILS SHALL BE REMOVABLE FROM THE SIDE OF THE AHU.
3. COIL PULL PANEL AND CONNECTIONS - LEFT SIDE.
4. COIL SHALL NOT CONTAIN TURBULATORS.
5. DOUBLE STACKED COILS WITH 4 PIPING CONNECTIONS.

City of Aurora Building Division
Reviewed for Code Compliance
Approved as Noted: Regan B
Date: Nov 13, 2025
2021 INTERNATIONAL CODES & 2023 NEC

HYDRONIC AHU HEATING COIL SCHEDULE (HC) (100% WATER)

TAG	LOCATION	TYPE	CFM	TOTAL MBH	FACE AREA (SQ FT)	CONNECTION DIA.	FACE VEL (FPM)	ROWS	FPI	MIN. TUBE DIA. (IN.)	MIN. TUBE THICK. (IN.)	AIR DATA			FLUID DATA					WEIGHT (LBS)		MANUFACTURER	REMARKS
												EAT DB °F	LAT DB °F	APD (IN.)	EWT °F	LWT °F	VEL (FT/S)	GPM	WPD (FT.)	DRY WEIGHT	TOTAL WEIGHT		
HC-15	RTAH-15	FULL HEIGHT	12,500	266	30.0	1.5"	417	1	8	5/8"	0.025	45.5	68.4	0.08	140.0	110.0	2.1	18.1	1.2	176	215	YORK	ALL

REMARKS:

1. COIL SHALL NOT CONTAIN TURBULATORS.
2. COILS SHALL BE REMOVABLE FROM THE SIDE OF THE AHU.
3. COIL PULL PANEL AND CONNECTIONS - LEFT SIDE.
4. CIRCULATION PUMP CALCULATED FOR 3.0 FT/S VELOCITY.
5. DOUBLE DECK COIL WITH 4 PIPING CONNECTIONS.

TMCA IR RTAH-15 - VENTILATION SCHEDULE

ROOM NAME	AHU SERVING SPACE	ROOM CLASSIFICATION	FLOOR AREA SQ. FT.	CELING HEIGHT FT.	SPACE VOLUME CU FT	GOVERNING TABLE	ASHRAE 62.1						ASHRAE 170								DESIGN DATA								
							NO PEOPLE	REQUIRED OA RATE (Rp) CFM/PERSON	REQ. AREA OA RATE (Ra) CFM/SF	AIR CLASS	OA CFM REQUIRED	REQ EXHAUST RATE (CFM/SF)	EXHAUST CFM REQUIRED	PRESSURE RELATION	MINIMUM OUTSIDE ACH	MINIMUM TOTAL ACH	ALL ROOM AIR EXHAUSTED	RM UNIT RECIRC. ALLOWED	REQ DESIGN RH (%)	REQ DESIGN TEMP. (°F)	REQUIRED TOTAL AIR CFM	REQUIRED OUTSIDE AIR CFM	DESIGN MINIMUM SUPPLY AIR CFM	DESIGN MINIMUM RETURN AIR CFM	DESIGN OUTDOOR AIR CFM	DESIGN EXHAUST AIR CFM	MINIMUM TRANSFER AIR CFM	DESIGN OA ACH	DESIGN MINIMUM TOTAL ACH
10 CORRIDOR	RTAH-15	PATIENT CORRIDOR	610	8	4880	ASHRAE 170								NR	NR	2	NO	NO	NR	NR	163	N/A	670	670	201	0	0	2.5	8.2
4 OFF	RTAH-15	OFFICE SPACE	108	8	864	ASHRAE 62.1	2	5	0.06	N/A	16	N/A	N/A										250	250	75	0	0	5.2	17.4
8107A TLT	RTAH-15	PATIENT TOLIET	80	8	640	ASHRAE 170								NEGATIVE	NR	10	YES	NO	NR	NR	0	N/A	40	0	12	115	-75	1.1	14.5
8100A CORRIDOR	RTAH-15	PATIENT CORRIDOR	258	8	2064	ASHRAE 170								NR	NR	2	NO	NO	NR	NR	69	N/A	200	200	60	0	0	1.7	5.8
8101A CORRIDOR	RTAH-15	NURSING UNIT - PATIENT ROOM	610	8	4880	ASHRAE 170								NR	2	4	NO	NO	NR	NR	325	163	330	330	99	0	0	1.2	4.1
8101B BAY 03	RTAH-15	NURSING UNIT - PATIENT ROOM	103	8	824	ASHRAE 170								NR	2	4	NO	NO	NR	70-75	55	27	125	125	38	0	0	2.7	9.1
8103A RECOVERY ROOM 2	RTAH-15	NURSING UNIT - PATIENT ROOM	99	8	792	ASHRAE 170								NR	2	4	NO	NO	NR	70-75	53	26	150	150	45	0	0	3.4	11.4
8104A RECOVERY ROOM 3	RTAH-15	NURSING UNIT - PATIENT ROOM	123	8	984	ASHRAE 170								NR	2	4	NO	NO	NR	70-75	66	33	200	200	60	0	0	3.7	12.2
8105A NURSE STATION	RTAH-15	NURSING UNIT - PATIENT ROOM	108	8	864	ASHRAE 170								NR	2	4	NO	NO	NR	70-76	58	29	245	245	74	0	0	5.1	17.0
8106A READING ROOM	RTAH-15	OFFICE SPACE	114	8	912	ASHRAE 62.1	2	5	0.06	N/A	17	N/A	N/A										150	150	45	0	0	3.0	9.9
8108A EQUIPMENT ROOM	RTAH-15	MECHANICAL ROOM	82	8	656	ASHRAE 62.1	0	NR	NR	N/A	N/A	N/A	N/A										0	0	0	0	0	0.0	0.0
8109A INTERVENTIONAL RADIOLOGY ROOM 01	RTAH-15	IMAGING ROOM - CLASS I	526	8	4208	ASHRAE 170								NR	2	6	NO	NO	MAX 60	72-78	421	140	1650	1650	495	0	0	7.1	23.5
8110A CONTROL ROOM	RTAH-15	OFFICE SPACE	189	8	1512	ASHRAE 62.1	4	5	0.06	N/A	31	N/A	N/A										275	275	83	0	0	3.3	10.9
8112A CONTROL ROOM	RTAH-15	OFFICE SPACE	118	8	944	ASHRAE 62.1	4	5	0.06	N/A	27	N/A	N/A										200	200	60	0	0	3.8	12.7
8101-D BAY 04	RTAH-15	NURSING UNIT - PATIENT ROOM	67	8	536	ASHRAE 170								NR	2	4	NO	NO	NR	70-75	36	18	125	125	38	0	0	4.2	14.0
8101-C BAY 05	RTAH-15	NURSING UNIT - PATIENT ROOM	70	8	560	ASHRAE 170								NR	2	4	NO	NO	NR	70-75	37	19	125	125	38	0	0	4.0	13.4
8111A INTERVENTIONAL RADIOLOGY ROOM 02	RTAH-15	IMAGING ROOM - CLASS I	453	8	3624	ASHRAE 170								NR	2	6	NO	NO	MAX 60	72-78	362	121	2300	2300	690	0	0	11.4	38.1
8113A INTERVENTIONAL RADIOLOGY ROOM 03	RTAH-15	IMAGING ROOM - CLASS I	706	8	5648	ASHRAE 170								NR	2	6	NO	NO	MAX 60	72-78	565	188	1250	1250	375	0	0	4.0	13.3
8902A IR EQUIP ROOM	RTAH-15	MECHANICAL ROOM	143	8	1144	ASHRAE 62.1	0	NR	NR	N/A	N/A	N/A	N/A										0	0	0	0	0	0.0	0.0
8102A BREAK ROOM	RTAH-15	BREAK ROOM	125	8	1000	ASHRAE 62.1	4	5	0.06	N/A	28	N/A	N/A										100	100	30	0	0	1.8	6.0
8202A SOILED LINEN	RTAH-15	SOILED HOLDING	23	8	184	ASHRAE 170								NEGATIVE	NR	10	YES	NO	NR	NR	0	N/A	0	0	0	75	-75	0.0	24.5
7901A VOICE/DATA	RTAH-15	MECHANICAL ROOM	92	8	736	ASHRAE 62.1	0	NR	NR	N/A	N/A	N/A	N/A										300	300	90	0	0	7.3	24.5
8201A TRASH	RTAH-15	LINEN AND REFUSE CHUTE ROOM	22	8	176	ASHRAE 170								NEGATIVE	NR	10	YES	NO	NR	NR	0	N/A	0	0	0	75	-75	0.0	25.6
8002A MRI	RTAH-15	IMAGING ROOM - CLASS I	382	8	3056	ASHRAE 170								NR	2	6	NO	NO	MAX 60	72-78	306	102	1200	1200	360	0	0	7.1	23.6
8000A MRI SUITE	RTAH-15	OFFICE SPACE	147	8	1176	ASHRAE 62.1	2	5	0.06	N/A	19	N/A	N/A										90	90	27	0	0	1.4	4.6
8000B MRI CONTROL	RTAH-15	OFFICE SPACE	135	8	1080	ASHRAE 62.1	3	5	0.06	N/A	23	N/A	N/A										440	440	132	0	0	7.3	24.4
8901A X-RAY EQUIP	RTAH-15	MECHANICAL ROOM	198	8	1584	ASHRAE 62.1	0	NR	NR	N/A	N/A	N/A	N/A										0	0	0	0	0	0.0	0.0
8001A TLT	RTAH-15	PATIENT TOLIET	45	8	360	ASHRAE 170								NEGATIVE	NR	10	YES	NO	NR	NR	0	N/A	0	0	0	75	-75	0.0	12.5

REMARKS:

1. INTAKE 3 - 1,308 TO BE SERVED BY EXISTING RTU-ER AND EXISTING ISO EA SYSTEM. NEW AT AND EV SERVING THIS SPACE TO BE PROVIDED AS PART OF THE SCOPE OF THIS PROJECT.
2. CODE MINIMUM 1510 CFM OF OUTSIDE AIR TO BE PROVIDED BY RTU-ER-2. DESIGN OUTSIDE AIR FLOWRATE OF 5685 CFM TO BE PROVIDED BY RTU-ER-2.

STEAM TRAP SCHEDULE

TAG	LOCATION	SERVICE	TRAP TYPE	STEAM PRESSURE (PSI)	NOMINAL TRAP SIZE (IN.)	MANUFACTURER	MODEL	REMARKS
FT-15	IN RTAH-15 PIPING VESTIBULE	DRIP	F&T	15	3/4	ARMSTRONG	15B3	ALL
IB-15	UNDER STRUCTURAL PLATFORM OF RTAH-15	DRIP	IB	15	3/4	ARMSTRONG	813	ALL

REMARKS:

1. TRAP BODY SHALL BE CAST IRON RATED FOR 125 PSI.
2. PROVIDE WITH BIMETALLIC THERMOSTATIC AIR VENT TO RELEASE NON-CONDENSIBLES. AIR VENT SHALL CLOSE UPON REACHING STEAM TEMPERATURE.

EXISTING VARIABLE AIR VOLUME BOX WITH HOT WATER REHEAT SCHEDULE (VAV)

TAG	LOCATION / AREA SERVED	REBALANCED AIR FLOW (CFM)	MAX AIR FLOW (CFM)	MIN AIR FLOW (CFM)	MAX AIR PD (IN. W.C.)	MIN INLET SP (IN. W.C.)	HEATING COIL								REMARKS
							EAT (°F)	LAT (°F)	EWT (°F)	LWT (°F)	CAPACITY (MBH)	FLOW (GPM)	WATER PD (FT)	RUNOUT PIPE SIZE (IN)	RUNOUT DUCT SIZE (IN)	
(E)VAV-1501	CORRIDOR	670	670	205	0.5	0.75	55	90	180	150	15.4	0	5	3/4	10	1
(E)VAV-1502	VOICE / DATA	300	300	90	0.5	0.75	N/A	N/A	N/A	N/A	N/A	N/A	N/A	N/A	8	1-2
(E)VAV-1503	CONTROL ROOM	200	200	60	0.5	0.75	55	90	180	150	4.6	0.3	5	3/4	6	1
(E)VAV-1504	IR ROOM 03	1240	1240	565	0.5	0.75	55	95	180	150	19.4	1.3	5	3/4	14	1
(E)VAV-1505	IR ROOM 01	1650	1650	495	0.5	0.75	55	90	180	150	56.6	3.8	5	1	16	1
(E)VAV-1506	CONTROL ROOM	275	275	105	0.5	0.75	55	85	180	150	6.9	0.5	5	3/4	8	1
(E)VAV-1507	IR ROOM 02	2300	2300	690	0.5	0.75	55	85	180	150	45.5	3	5	1	16	1
(E)VAV-1508	OFF	245	245	75	0.5	0.75	55	90	180	150	18.3	1.2	5	3/4	10	1
(E)VAV-1509	READING ROOM / BREAK ROOM	290	290	150	0.5	0.75	55	85	180	150	26.4	1.8	5	3/4	14	1
(E)VAV-1510	MRI SUITE	440	440	135	0.5	0.75	55	85	180	150	26.4	1.8	5	3/4	12	1
(E)VAV-1511	RECOVERY ROOMS 2 & 3	350	350	120	0.5	0.75	55	95	180	150	12.2	0.8	5	3/4	8	1
(E)VAV-1512	BAY 03-05 / NURSE STATION	900	950	615	0.5	0.75	55	85	180	150	16.5	1.1	5	3/4	10	1
(E)VAV-1513	MRI ROOM	1200	1200	360	0.5	0.75	55	90	180	150	36.6	2.4	5	1-1/2	14	1

REMARKS:

1. BALANCE TO CORRECTED CFM.
2. COOLING ONLY VAV.

HUMIDIFIER SCHEDULE (H)

TAG	LOCATION	LOAD (LBS/HR)	STEAM PRESSURE (PSI)	AIRFLOW (CFM)	EAT (DB)	ENTERING AIR RELATIVE HUMIDITY (%)	LEAVING AIR RELATIVE HUMIDITY (%)	ABSORPTION DISTANCE (IN.)	CONTROL VALVE CONNECTION (IN.)	ASSEMBLY WEIGHT (LBS)	REMARKS
H-15	RTAH-15	200	10	12,500	55°F	20	58	11.76	0.75	111.4	ALL

REMARKS:

1. PROVIDE WITH RTAH-15.
2. FACTORY PROVIDED AIRFLOW PROVING SWITCH AND STEAM CONTROL VALVE TO BE FIELD INSTALLED.
3. PROVIDE ASHRAE IAQ COMPLIANT STAINLESS STEEL LINED DRAIN PAN AND SUPPORT.

HEATING WATER COIL PUMP SCHEDULE

TAG	LOCATION	SERVICE	TYPE	GPM	HEAD (FT.)	RPM	MOTOR HP	VOLTS/PH/HZ	VFD	MANUFACTURER	MODEL	REMARKS
HCP-15	RTAH-15 PIPE CHASE	HEATING COIL	DRY ROTOR CIRCULATOR PUMP	25	10	3300	1/6	115/1/60	NO	BELL & GOSSETT	PL-50	ALL

REMARKS:

1. PUMP TO BE HOUSED IN THE AHU PIPE CHASE.
2. PERMANENTLY LUBRICATED MAINTENANCE FREE CIRCULATOR PUMP.
3. HEATING COIL PUMP TO BE INTEGRATED INTO THE EXISTING JCI BAS. REFER TO CONTROLS SEQUENCE AND SPECIFICATION FOR DETAILS. MECHANICAL CONTRACTOR TO COORDINATE TIE IN WITH CONTROLS...

Salas O'Brien
salasobrien.com
Greenwood Village
9250 East Costilla Avenue, Suite 220
Greenwood Village, CO 80112
Registration:

CONFIDENTIAL
THIS DRAWING AND ASSOCIATED DESIGN ELEMENTS ARE CONFIDENTIAL AND THE PROPERTY OF SALAS O'BRIEN, WHICH RETAINS ALL COMMON LAW, COPYRIGHT, STATUTORY AND OTHER RIGHTS THERETO. ANY USE, DISCLOSURE, REPRODUCTION OR INFRINGEMENT OF THESE RIGHTS (IS PROHIBITED, UNLESS OTHERWISE AGREED TO BY SALAS O'BRIEN, THIS DRAWING (AS WELL AS ANY COPIES) SHALL BE RETURNED TO SALAS O'BRIEN UPON REQUEST.

PROFESSIONAL SEAL

COLORADO LICENSED MICHAEL P THOMPSON 53150 PROFESSIONAL ENGINEER

ISSUE DATE	DESCRIPTION
10/31/2025	PERMIT

2561-22631-00
THE MEDICAL CENTER OF AURORA

IR AHU-15 Replacement

1501 S. Potomac St,
Aurora, CO 80012

REVISIONS

Δ	DESCRIPTION	DATE

CHECKED BY	DRAWN BY
BH	XW, ZP

SHEET NAME

MECHANICAL SCHEDULES

SHEET NUMBER	REVISION
M001	

Autodesk Docs://061_2561-22631-00_TMCA IR AHU-15_ME_R25/ISO_2561-22631-00_TMCA IR AHU-15_ME_R25.rvt
10/31/2025 12:58:37 PM

RSN: 1940718 | PERMIT #2025 2572466

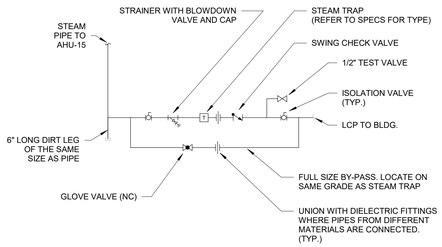

6 DRIP LEG PIPING
NOT TO SCALE

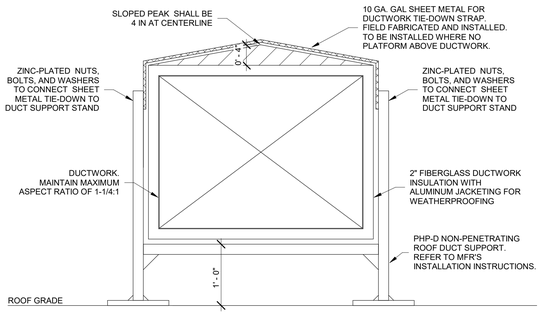

7 EXTERNAL DUCTWORK
NOT TO SCALE

City of Aurora Building Division
Reviewed for Code Compliance
Approved as Noted: Regan B
Date: Nov 13, 2025
2021 INTERNATIONAL CODES & 2023 NEC

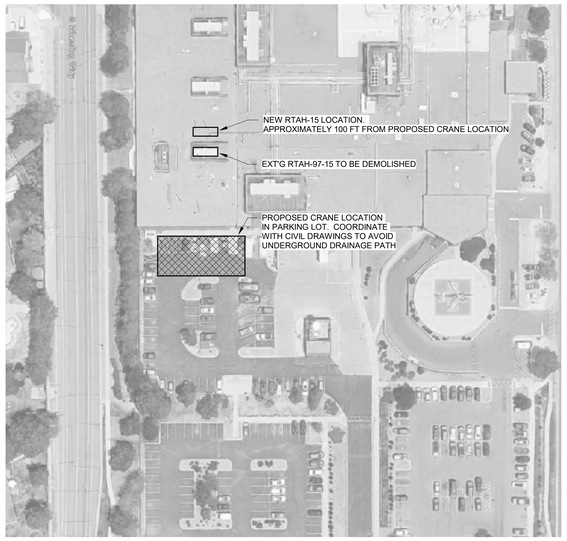

4 PROPOSED SITE LOCATION OF CRANE ANCHOR
NOT TO SCALE

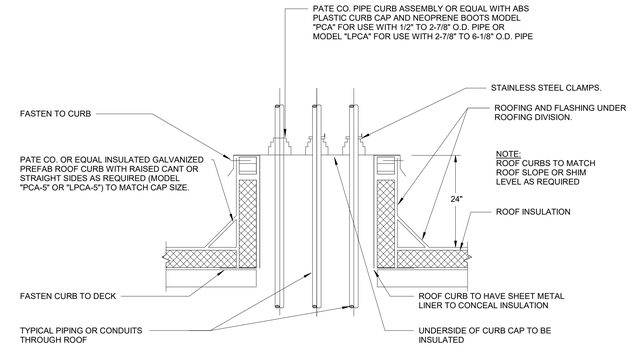

1 TYPICAL ROOF PIPING PENETRATION
NOT TO SCALE

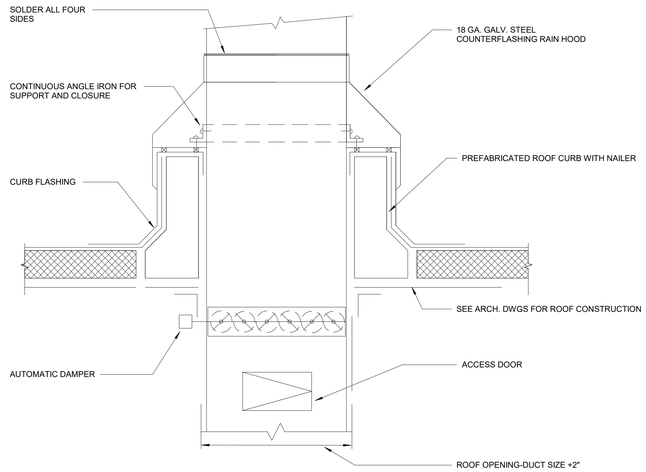

2 TYPICAL ROOF DUCTWORK PENETRATION
NOT TO SCALE

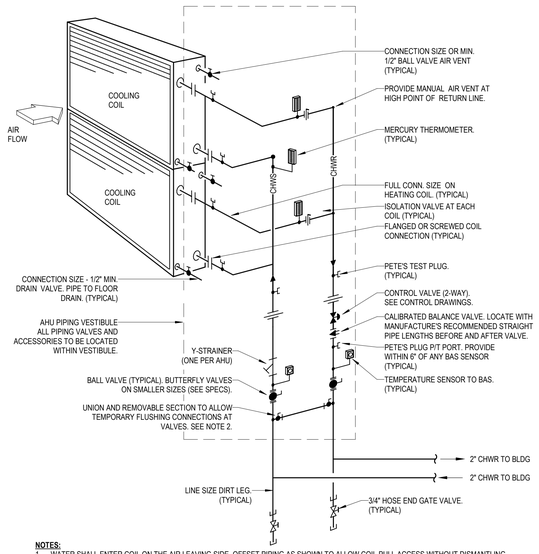

NOTES:
1. WATER SHALL ENTER COIL ON THE AIR LEAVING SIDE. OFFSET PIPING AS SHOWN TO ALLOW COIL PULL ACCESS WITHOUT DISMANTLING VERTICAL RISERS.
2. PROVIDE MINIMUM 1-1/2" FLUSH CONNECTION WITH 1-1/2" BALL VALVES. CONNECT TO SUPPLY AND RETURN MAINS WITH TEMPORARY FLUSH PIPE. PIPE MAY BE CLEAR PLASTIC SECURED WITH RADIATOR CLAMPS. AFTER FLUSHING REMOVE TEMPORARY PIPING, CAP EACH END OF PIPE, CLOSE FLUSHING VALVES AND REMOVE HANDLES.
3. PROVIDE FLEX CONNECTIONS BETWEEN BRANCH PIPING AND COIL.
4. PROVIDE PIPING INSULATION, PER MECHANICAL SPECIFICATIONS, ON PIPING AND ACCESSORIES INSTALLED OUTSIDE THE PIPING CHASE.

8 MULTIPLE CHILLED WATER COIL PIPING DIAGRAM
NOT TO SCALE

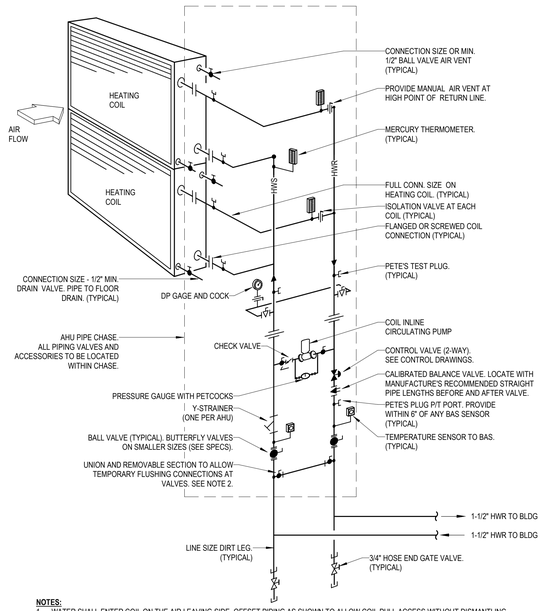

NOTES:
1. WATER SHALL ENTER COIL ON THE AIR LEAVING SIDE. OFFSET PIPING AS SHOWN TO ALLOW COIL PULL ACCESS WITHOUT DISMANTLING VERTICAL RISERS.
2. PROVIDE MINIMUM 1-1/2" FLUSH CONNECTION WITH 1-1/2" BALL VALVES. CONNECT TO SUPPLY AND RETURN MAINS WITH TEMPORARY FLUSH PIPE. PIPE MAY BE CLEAR PLASTIC SECURED WITH RADIATOR CLAMPS. AFTER FLUSHING REMOVE TEMPORARY PIPING, CAP EACH END OF PIPE, CLOSE FLUSHING VALVES AND REMOVE HANDLES.
3. PROVIDE FLEX CONNECTIONS BETWEEN BRANCH PIPING AND COIL.
4. PROVIDE PIPING INSULATION, PER MECHANICAL SPECIFICATIONS, ON PIPING AND ACCESSORIES INSTALLED OUTSIDE THE PIPING CHASE.

5 MULTIPLE PREHEAT COIL PIPING DIAGRAM
NOT TO SCALE

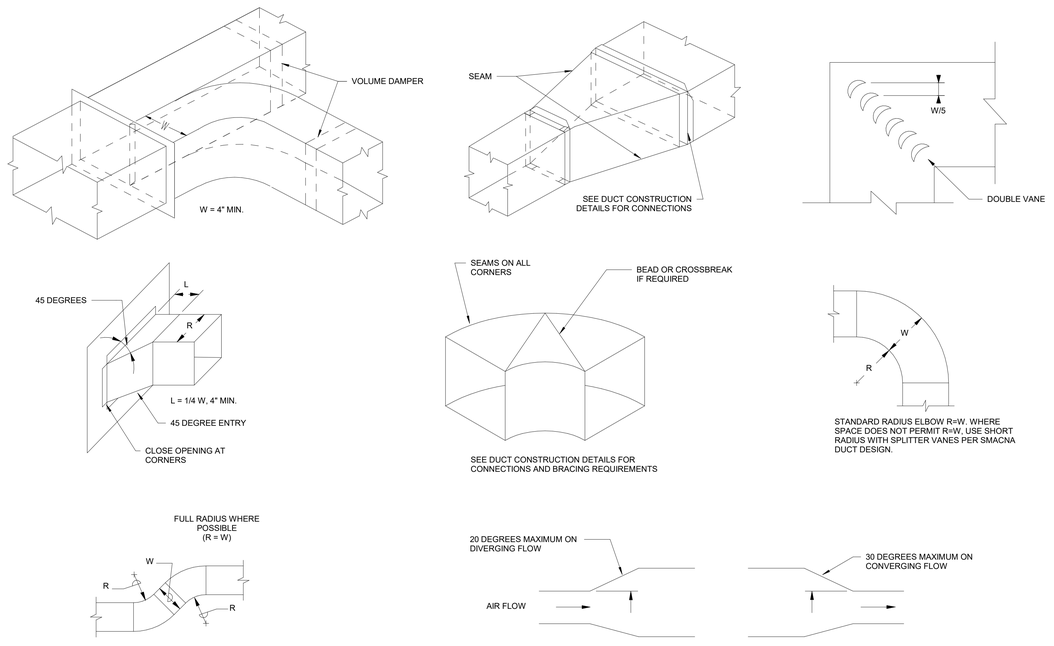

3 DUCT CONSTRUCTION
NOT TO SCALE

Salas O'Brien
salasobrien.com
Greenwood Village
9250 East Costilla Avenue, Suite 220
Greenwood Village, CO 80112
Registration:

CONFIDENTIAL
THIS DRAWING AND ASSOCIATED DESIGN ELEMENTS ARE CONFIDENTIAL AND THE PROPERTY OF SALAS O'BRIEN, WHICH RETAINS ALL COMMON LAW, COPYRIGHT, STATUTORY AND OTHER RIGHTS THERETO. ANY REPRODUCTION AND/OR OTHER USE OF THIS RIGHTS (CTION IS PROHIBITED, UNLESS OTHERWISE AGREED TO BY SALAS O'BRIEN. THIS DRAWING (AS WELL AS ANY COPIES) SHALL BE RETURNED TO SALAS O'BRIEN UPON REQUEST.

PROFESSIONAL SEAL

COLORADO LICENSED MICHAEL P THOMPSON 53150 PROFESSIONAL ENGINEER

ISSUE DATE	DESCRIPTION
10/31/2025	PERMIT

2561-22631-00
THE MEDICAL CENTER OF AURORA

IR AHU-15 Replacement

1501 S. Potomac St,
Aurora, CO 80012

REVISIONS

Δ	DESCRIPTION	DATE

CHECKED BY	DRAWN BY
BH	XW, ZP

SHEET NAME

MECHANICAL DETAILS

SHEET NUMBER	REVISION
M002	

Autodesk Docs://061_2561-22631-00_TMCA IR AHU-15_ME_R25/SO_2561-22631-00_TMCA IR AHU-15_ME_R25.rvt
10/31/2025 12:58:38 PM

RSN: 1940718 | PERMIT #2025 2572466

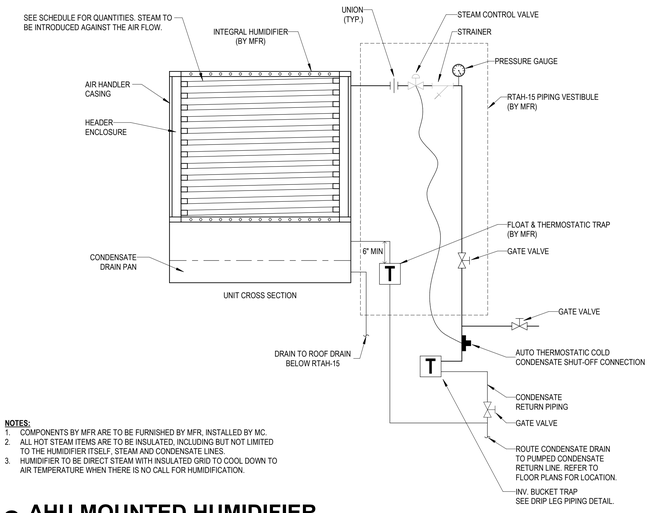

NOTES:
1. COMPONENTS BY MFR ARE TO BE FURNISHED BY MFR, INSTALLED BY MC.
2. ALL HOT STEAM ITEMS ARE TO BE INSULATED, INCLUDING BUT NOT LIMITED TO THE HUMIDIFIER ITSELF, STEAM AND CONDENSATE LINES.
3. HUMIDIFIER TO BE DIRECT STEAM WITH INSULATED GRID TO COOL DOWN TO AIR TEMPERATURE WHEN THERE IS NO CALL FOR HUMIDIFICATION.

12 AHU MOUNTED HUMIDIFIER
NOT TO SCALE

Mechanical Compliance Certificate

Project Information

Energy Code: 2021 IECC
Project Title: TMCA IR AHU-15 Replacement
Location: Aurora, Colorado
Climate Zone: 5b
Project Type: Alteration

Construction Site: **Owner/Agent:** **Designer/Contractor:**

Mechanical Systems List

Quantity	Component	Description
HVAC Systems		
1	RTAH-15 (Multiple-Zone):	Heating: 1 each - Hydronic or Steam Coil (HC-15), Hot Water, Capacity = 260 kBtu/h No minimum efficiency requirement applies Cooling: 1 each - Hydronic Coil (CC-15), Capacity = 303 kBtu/h, Air Economizer No minimum efficiency requirement applies Fan System: RTAH-15 -- Compliance ((Brake HP and fan efficiency method) : Passes Fans: SA Supply, Multi-Zone VAV, 12500 CFM, 30.0 motor nameplate hp, 17.4 design brake hp (32.1 max. BHP), 1.22 fan energy index RA Return, Multi-Zone VAV, 8090 CFM, 6.0 motor nameplate hp, 4.7 design brake hp (4.7 max. BHP), 1.30 fan energy index Pressure Drop Credits: Fully ducted return and/or exhaust air systems, 1.1365 credit Return and/or exhaust airflow control devices, 1.1365 credit Particulate filtration credit: MERV 9 through 12, 1.5130 credit Particulate filtration credit: MERV 13 through 15, 2.7233 credit

Mechanical Compliance Statement

Compliance Statement: The proposed mechanical design represented in this document is consistent with the building plans, specifications, and other calculations submitted with this permit application. The proposed mechanical systems have been designed to meet the 2021 IECC requirements in COMcheckWeb and to comply with any applicable mandatory requirements listed in the Inspection Checklist.

ZANE PEREZ — 09/19/2025

Name - Title **Signature** **Date**

11 TMCA COMCHECK
NOT TO SCALE

City of Aurora Building Division
Reviewed for Code Compliance
Approved as Noted: Regan B
Date: Nov 14, 2025
2021 INTERNATIONAL CODES & 2023 NEC

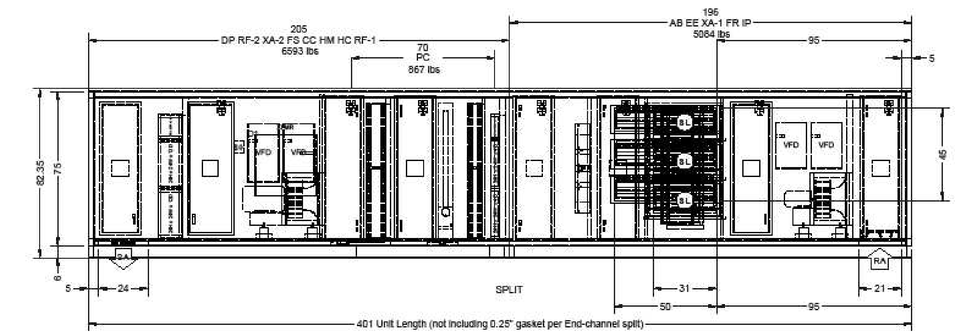

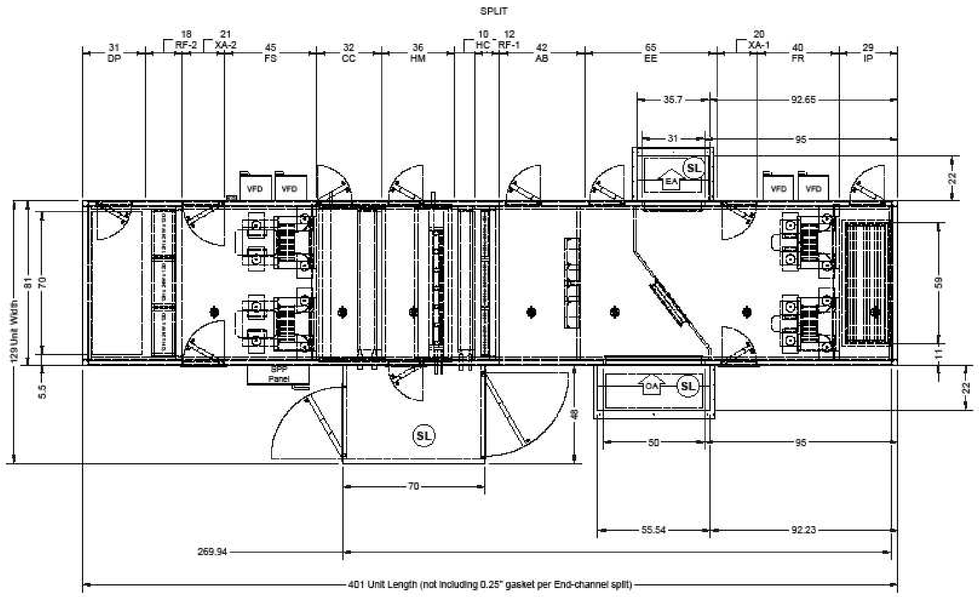

10 RTAH-15 CUTSHEET
NOT TO SCALE

Salas O'Brien
salasobrien.com
Greenwood Village
9250 East Costilla Avenue, Suite 220
Greenwood Village, CO 80112
Registration:

CONFIDENTIAL
THIS DRAWING AND ASSOCIATED DESIGN ELEMENTS ARE CONFIDENTIAL AND THE PROPERTY OF SALAS O'BRIEN, WHICH RETAINS ALL COMMON LAW, COPYRIGHT, STATUTORY AND OTHER RIGHTS THERETO. ANY UNAUTHORIZED USE OR REPRODUCTION IS PROHIBITED, UNLESS OTHERWISE AGREED TO BY SALAS O'BRIEN, THIS DRAWING (AS WELL AS ANY COPIES) SHALL BE RETURNED TO SALAS O'BRIEN UPON REQUEST.

PROFESSIONAL SEAL

ISSUE DATE	DESCRIPTION
10/31/2025	PERMIT

2561-22631-00
THE MEDICAL CENTER OF AURORA

IR AHU-15 Replacement

1501 S. Potomac St,
Aurora, CO 80012

REVISIONS

Δ	DESCRIPTION	DATE
1	Preliminary City Comments	11/14/2025

CHECKED BY BH
DRAWN BY XW, ZP

SHEET NAME

MECHANICAL DETAILS

SHEET NUMBER M003
REVISION 1

Autodesk Docs://061_2561-22631-00_TMCA IR AHU-15_ME_R25/ISO_2561-22631-00_TMCA IR AHU-15_ME_R25.rvt
11/14/2025 12:17:09 PM

RSN: 1940718 | PERMIT #2025 2572466

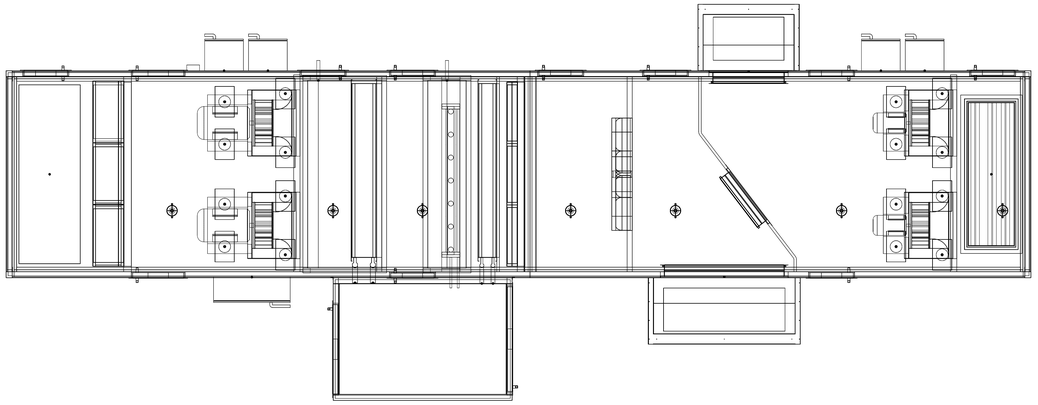

1 RTAH-15 TOP VIEW

SCALE: 1/2" = 1'

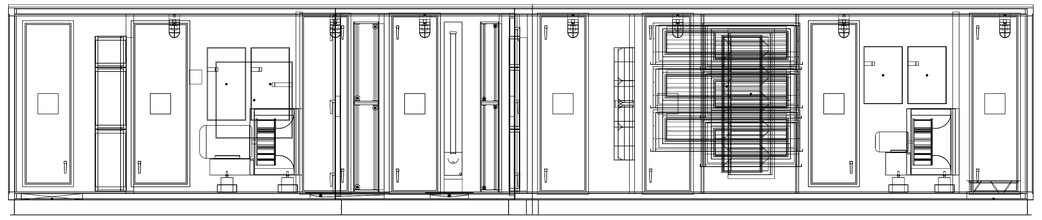

2 RTAH-15 ELEVATION VIEW

SCALE: 1/2" = 1'

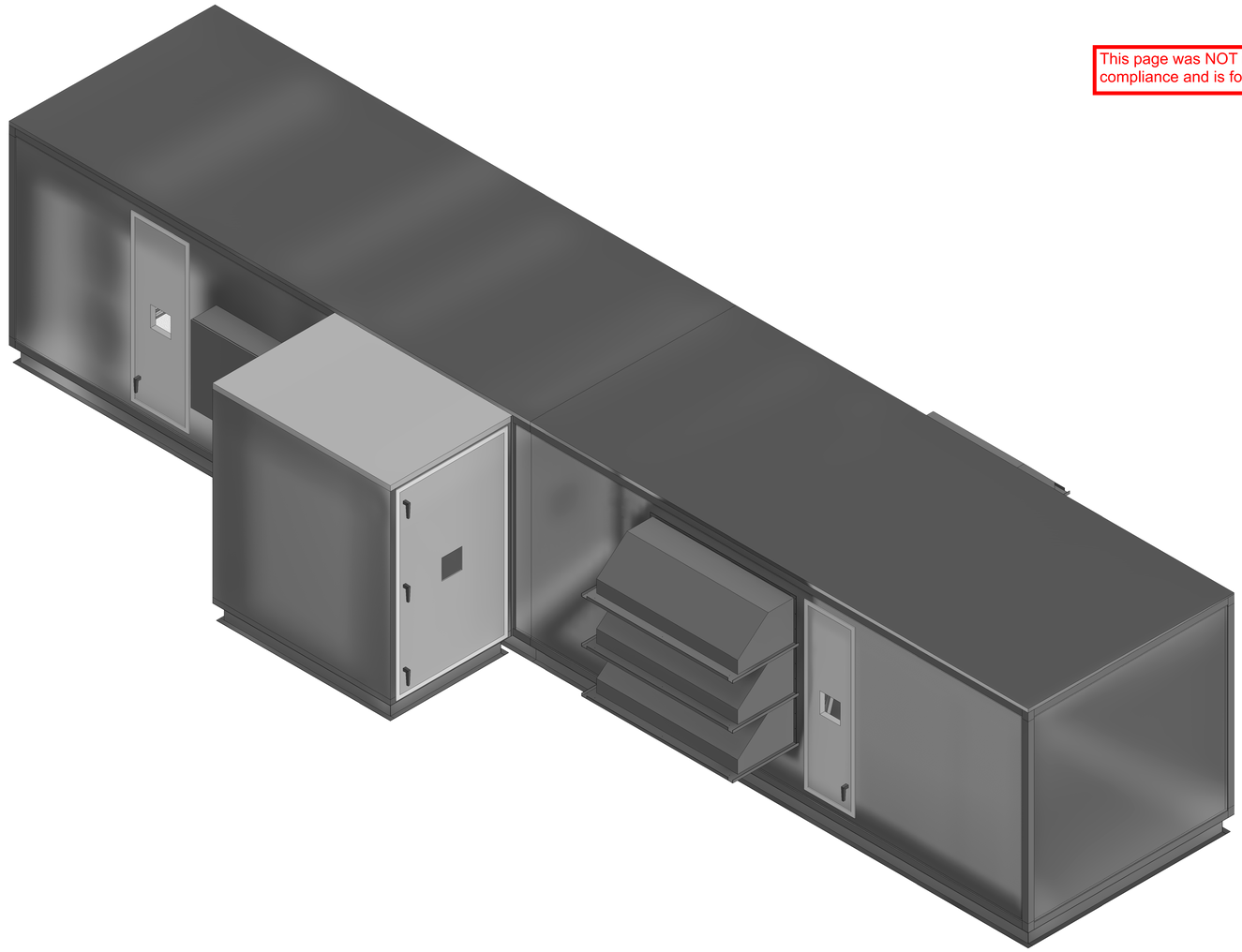

3 RTAH-15 ISOMETRIC VIEW

SCALE: 3/4" = 1'

This page was NOT reviewed for code compliance and is for reference only.

Salas O'Brien

salasobrien.com

Greenwood Village
9250 East Costilla Avenue, Suite 220
Greenwood Village, CO 80112

Registration:

CONFIDENTIAL
THIS DRAWING AND ASSOCIATED DESIGN ELEMENTS ARE CONFIDENTIAL AND THE PROPERTY OF SALAS O'BRIEN, WHICH RETAINS ALL COMMON LAW, COPYRIGHT, STATUTORY AND OTHER RIGHTS THERETO. UNAUTHORIZED USE, REPRODUCTION OR DISTRIBUTION IS PROHIBITED, UNLESS OTHERWISE AGREED TO BY SALAS O'BRIEN, THIS DRAWING (AS WELL AS ANY COPIES) SHALL BE RETURNED TO SALAS O'BRIEN UPON REQUEST.

PROFESSIONAL SEAL

COLORADO LICENSED
MICHAEL P THOMPSON
53150
PROFESSIONAL ENGINEER

ISSUE DATE	DESCRIPTION
10/31/2025	PERMIT

2561-22631-00
THE MEDICAL CENTER OF AURORA

IR AHU-15 Replacement

1501 S. Potomac St,
Aurora, CO 80012

REVISIONS

Δ	DESCRIPTION	DATE

CHECKED BY: BH
DRAWN BY: XW, ZP

SHEET NAME

RTAH DETAILS

SHEET NUMBER: M004
REVISION:

Autodesk Docs://061_2561-22631-00_TMCA IR AHU-15_ME_R25/SO_2561-22631-00_TMCA IR AHU-15_ME_R25.rvt
10/31/2025 12:58:52 PM

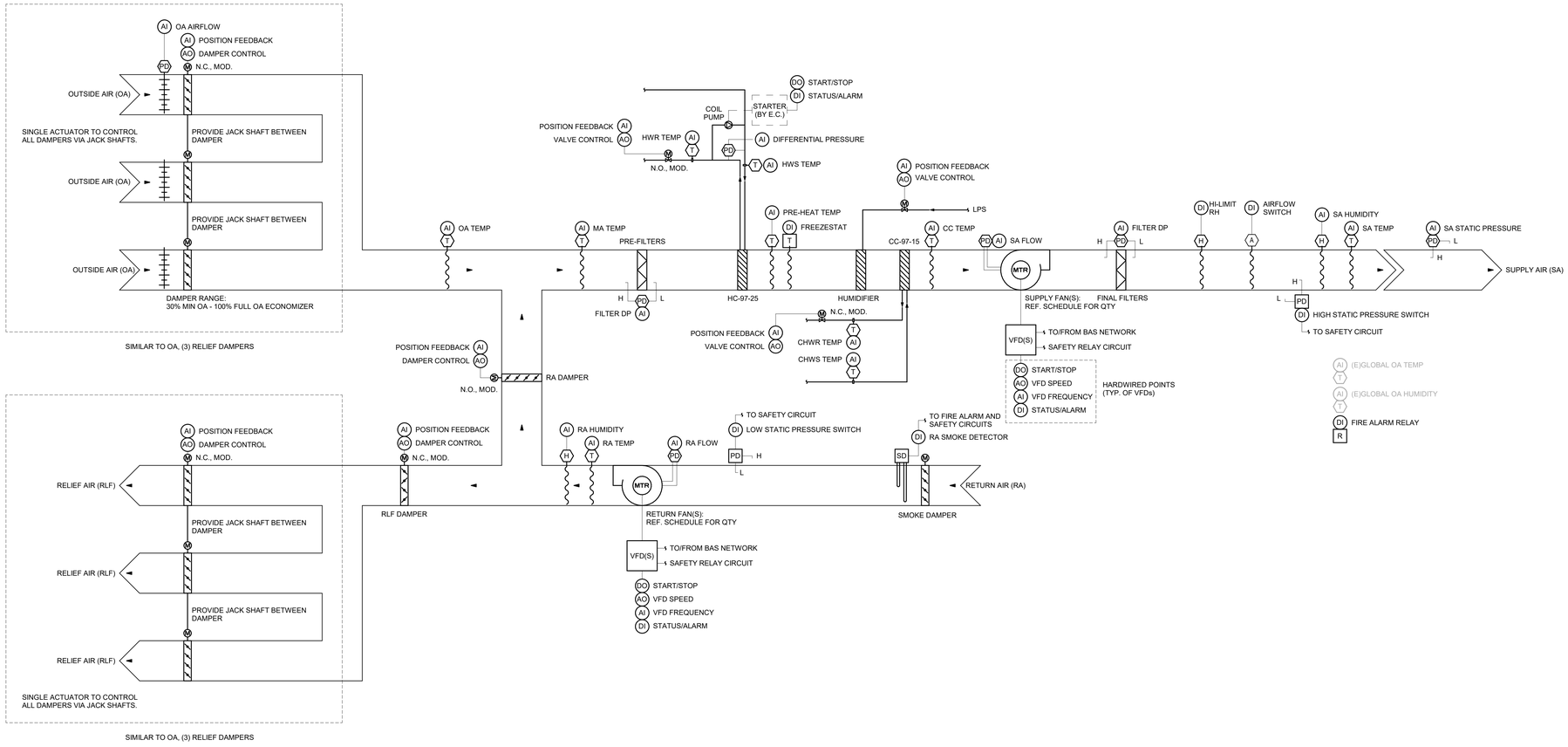

1 AHU-15 CONTROL DIAGRAM

NOT TO SCALE

City of Aurora Building Division
Reviewed for Code Compliance
Approved as Noted: Regan B
Date: Nov 13, 2025
2021 INTERNATIONAL CODES & 2023 NEC

Salas O'Brien

salasobrien.com

Greenwood Village
9250 East Costilla Avenue, Suite 220
Greenwood Village, CO 80112

Registration:

CONFIDENTIAL
THIS DRAWING AND ASSOCIATED DESIGN ELEMENTS ARE CONFIDENTIAL AND THE PROPERTY OF SALAS O'BRIEN, WHICH RETAINS ALL COMMON LAW, COPYRIGHT, STATUTORY AND OTHER RIGHTS THERETO. ANY UNAUTHORIZED USE, REUSE OR REPRODUCTION IS PROHIBITED. UNLESS OTHERWISE AGREED TO BY SALAS O'BRIEN, THIS DRAWING (AS WELL AS ANY COPIES) SHALL BE RETURNED TO SALAS O'BRIEN UPON REQUEST.

PROFESSIONAL SEAL

COLORADO LICENSED
MICHAEL P THOMPSON
53150
PROFESSIONAL ENGINEER

ISSUE DATE	DESCRIPTION
10/31/2025	PERMIT

2561-22631-00
THE MEDICAL CENTER OF AURORA

IR AHU-15 Replacement

1501 S. Potomac St,
Aurora, CO 80012

REVISIONS

Δ	DESCRIPTION	DATE

CHECKED BY: BH
DRAWN BY: XW, ZP

SHEET NAME

MECHANICAL CONTROLS

SHEET NUMBER: M005
REVISION:

Autodesk Docs://061_2561-22631-00_TMCA IR AHU-15_ME_R25/SO_2561-22631-00_TMCA IR AHU-15_ME_R25.rvt
10/31/2025 12:58:52 PM

AIR HANDLING UNIT CONTROL SEQUENCES OF OPERATIONS:

FREEZE STAT:
WHENEVER FREEZE STAT SENSES A TEMPERATURE BELOW 36°F (ADJ.), IT SHALL PERFORM THE FOLLOWING:
- THE SUPPLY AND RETURN FANS SHALL SHUTDOWN.
- THE PREHEAT COIL RECIRCULATING PUMP SHALL BE ENERGIZED.
- THE OUTSIDE AIR DAMPER SHALL CLOSE.
- THE RELIEF DAMPER SHALL CLOSE.
- THE RETURN DAMPER SHALL OPEN.
- THE CHILLED WATER CONTROL VALVE SHALL FULLY OPEN.
- THE LEAD CHILLER CHILLED WATER ISOLATION VALVE SHALL OPEN, IF APPLICABLE.
- THE BAS SHALL GENERATE A LEVEL 2 "FREEZE STAT SHUTDOWN" ALARM AT THE FRONT-END.
- THE PREHEAT COIL SHALL REMAIN UNDER CONTROL OF THE PREHEAT COIL LEAVING AIR TEMPERATURE SENSOR.
- THE VARIABLE PRIMARY OR SECONDARY CHILLED WATER PUMP(S) SHALL BE ENERGIZED AND CONTROL SPEED SET TO MAINTAIN THE DIFFERENTIAL PRESSURE SETPOINT.

A MANUAL RESET AT THE UNIT SHALL BE REQUIRED TO RESTART A UNIT THAT HAS AUTOMATICALLY SHUT DOWN FROM A FREEZE STAT TRIP.

FILTERS:
ALL FILTERS SHALL HAVE A DIFFERENTIAL PRESSURE SENSOR/TRANSMITTER MEASURING THE PRESSURE DROP ACROSS THE FILTER BANKS. THE BAS SHALL GENERATE AN ALARM AT THE FRONT-END WHENEVER THE PRESSURE DROP ACROSS THE FILTER EXCEEDS THE FOLLOWING FINAL RESISTANCES (INDICATING A DIRTY FILTER):
- PRE-FILTERS (4" MERV 11):
  - 0.65 IN. W.C. (ADJ.), GENERATE A LEVEL 4 "PRE-FILTERS AT MID-LIFE" ALARM
  - 0.85 IN. W.C. (ADJ.), GENERATE A LEVEL 3 "CHANGE PRE-FILTER (END-OF-LIFE)" ALARM
- FINAL-FILTERS (12" MERV 14):
  - 1.00 IN. W.C. (ADJ.), GENERATE A LEVEL 4 "FINAL FILTERS AT MID-LIFE" ALARM
  - 1.50 IN. W.C. (ADJ.), GENERATE A LEVEL 3 "CHANGE FINAL FILTERS (END-OF-LIFE)" ALARM

HUMIDIFIER:
THE HUMIDIFIER CONTROLS SHALL BE ACTIVE ANY TIME THE SUPPLY IS RUNNING AND THE AIRFLOW SWITCH IS PROVEN ON. AS THE RETURN AIR HUMIDITY RISES TO ITS ADJUSTABLE SETPOINT, THE HUMIDIFIER VALVE SHALL MODULATE CLOSED. AS THE RETURN AIR HUMIDITY DECREASES BELOW ITS SETPOINT, THE HUMIDIFIER VALVE SHALL MODULATE OPEN. WHENEVER THE DISCHARGE AIR HUMIDITY IS ABOVE THE CONTROLLING LIMIT SETPOINT (80%, ADJ.) AS SENSED BY THE SUPPLY AIR HUMIDISTAT, THE HUMIDIFIER VALVE SHALL BE MODULATED CLOSED TO MAINTAIN THE CONTROLLING LIMIT SETPOINT. WHENEVER THE DISCHARGE AIR HUMIDITY IS ABOVE THE HIGH LIMIT SETPOINT SETPOINT (95%, ADJ.), AS SENSED BY THE HIGH LIMIT HUMIDISTAT, THE DDC SYSTEM SHALL DISABLE THE HUMIDIFIER, CLOSE THE STEAM VALVE, AND GENERATE A LEVEL 4 "HUMIDIFIER HIGH LIMIT EXCEEDED" ALARM.

FIRE ALARM SHUTDOWN:
WHENEVER THE FIRE ALARM SYSTEM SENSES SMOKE/FIRE, THE FIRE ALARM SYSTEM SHALL SIGNAL THE DDC SYSTEM TO DE-ENERGIZE THE UNIT AND GENERATE A LEVEL 1 "FIRE ALARM SHUTDOWN" ALARM.

PROGRAM DESIGN
WHEN THE SUPPLY FAN IS STARTED, THE AHU SHALL ALWAYS GO TO STATE 1 WITHOUT ENABLING THE CHILLED WATER PLANT. THE UNIT SHALL OPERATE IN STATE 1 FOR A 4 MINUTE TIME PERIOD (ADJ.). AFTER THE ADJUSTABLE TIME PERIOD HAS EXPIRED, ONE OF THE FOLLOWING SHALL OCCUR:
- IF THE OUTDOOR AIR TEMPERATURE IS EQUAL TO OR GREATER THAN 52°F (ADJ.) THE UNIT SHALL REMAIN IN STATE 1 UNTIL IT TRANSITIONS TO ANOTHER OPERATING STATE PER THE DETAILED OPERATING STATE SEQUENCES.
- IF THE OUTDOOR AIR TEMPERATURE IS LESS THAN 52°F (ADJ.) THE UNIT SHALL TRANSITION TO STATE 3 AND REMAIN IN STATE 3 UNTIL IT TRANSITIONS TO ANOTHER OPERATING STATE PER THE DETAILED OPERATING STATE SEQUENCES.

IF THE FACILITY'S CHILLED WATER PLANT IS NOT REQUIRED TO OPERATE CONTINUOUSLY THROUGHOUT THE YEAR, AN OUTDOOR AIR TEMPERATURE SHALL BE ESTABLISHED BY THE TEMPERATURE CONTROL CONTRACTOR TO PREVENT THE PLANT FROM BEING INADVERTENTLY STARTED. THE CHILLED WATER PLANT SHALL NOT BE ACTIVATED BELOW OUTDOOR TEMPERATURES EQUAL TO OR LESS THAN THE OUTDOOR AIR DISABLE TEMPERATURE, FOR EXAMPLE 44°F (ADJ.).

THE AHU SEQUENCE OF OPERATION SHALL INITIATE THE OPERATION OF THE CHILLED WATER PLANT, IF IT IS NOT ALREADY IN OPERATION, IF BOTH OF THE FOLLOWING OCCUR:
- THE OUTDOOR AIR TEMPERATURE EXCEEDS THE OUTDOOR AIR DISABLE TEMPERATURE SETPOINT FOR THE CHILLED WATER PLANT.
- THE AHU TRANSITIONS FROM STATE 3 TO STATE 2.

ALL TIMERS AND OTHER SPECIFIED PARAMETERS ARE TO BE INDEPENDENTLY ADJUSTABLE.

SOFTWARE STATUS POINTS SHALL BE CREATED FOR THE FOLLOWING LOCKOUTS AND FINITE STATES. THE CURRENT STATUS OF THE SOFTWARE LOCKOUT POINTS, ENABLED OR DISABLED, SHALL BE DISPLAYED AT THE BAS FRONT-END:
- CHILLED WATER CONTROL VALVE FULLY CLOSED LOCKOUT
- OUTSIDE AIR DAMPERS FULLY OPEN LOCKOUT
- OUTSIDE AIR DAMPERS MINIMUM POSITION LOCKOUT
- PREHEAT VALVE NORMAL CONTROL LOCKOUT
- OPERATING STATE 1 (MECHANICAL COOLING, MINIMUM OUTDOOR AIR)
- OPERATING STATE 2 (MECHANICAL AND ECONOMIZER COOLING)
- OPERATING STATE 3 (FULL ECONOMIZER COOLING, MODULATING OUTDOOR AIR)
- OPERATING STATE 4 (HEATING)

THE AHU SHALL RESTART AUTOMATICALLY AFTER A MOMENTARY POWER FAILURE OR AFTER TRANSFER TO AN ALTERNATE POWER SOURCE AND OPERATE IN THE SAME STATE IT WAS IN PRIOR TO THE POWER FAILURE OR TRANSFER OF POWER.

ALARMS:
IN ADDITION TO ALARMS LISTED IN THE SEQUENCES OF OPERATIONS, THE FOLLOWING ALARMS SHALL BE PROVIDED:
- IF ANY FAN HAS OPERATED FOR MORE THAN 1500 HOURS (ADJ.), GENERATE A LEVEL 4 "FAN RUNTIME EXCEEDED" ALARM.
- IF THE STATUS OF ANY FAN IS DIFFERENT FROM THE COMMAND FOR A PERIOD OF 15 SECONDS (ADJ.), GENERATE AN ALARM.
  - COMMANDED ON, STATUS OFF: LEVEL 2 "FAN FAILURE" ALARM.
  - COMMANDED OFF, STATUS ON: LEVEL 4 "FAN IN HAND" ALARM.
- IF THE FIRE ALARM IS COMMANDED ON BUT THE STATUS IS OFF FOR A MINIMUM OF 15 SECONDS, GENERATE A LEVEL 2 ALARM.
- IF THE FIRE ALARM IS COMMANDED OFF BUT THE STATUS IS ON FOR A MINIMUM OF 15 SECONDS, GENERATE A LEVEL 4 ALARM.
- IF THE VFD SPEED IS MORE THAN 5% OFF FROM THE COMMANDED VALUE, GENERATE A LEVEL 3 "VFD SPEED FAULT" ALARM.
- IF THE DUCT STATIC PRESSURE IS 0.1 IN. W.C. BELOW SETPOINT AND THE SUPPLY FAN(S) VFD(S) IS AT FULL SPEED, GENERATE A LEVEL 3 ALARM.
- IF THE MIXED AIR TEMPERATURE IS NOT BETWEEN THE OUTSIDE AIR TEMPERATURE AND THE RETURN AIR TEMPERATURE, GENERATE A LEVEL 4 ALARM.
- IF THE OPERATING STATE HAS CHANGED MORE THAN 7 TIMES (ADJ.) IN 1 MINUTE (ADJ.), GENERATE A LEVEL 4 ALARM.
- IF THE UNIT IS IN STATE 4 (HEATING) AND THE DISCHARGE AIR TEMPERATURE IS BELOW THE MIXED AIR TEMPERATURE, GENERATE A LEVEL 4 ALARM.
- IF THE UNIT IS IN STATE 1 (MECHANICAL COOLING, MINIMUM OUTDOOR AIR) AND THE OUTSIDE AIR AIRFLOW (CFM) IS 30% (ADJ.) ABOVE OR BELOW THE OUTSIDE AIR QUANTITY SETPOINT, GENERATE A LEVEL 4 ALARM.
- IF THE UNIT IS IN STATE 3 (FULL ECONOMIZER, MODULATING OUTDOOR AIR) AND THE DISCHARGE AIR TEMPERATURE IS MORE THAN 2°F (ADJ.) ABOVE OR BELOW THE MIXED AIR TEMPERATURE.
- IF THE UNIT IS IN STATE 3 (FULL ECONOMIZER, MODULATING OUTDOOR AIR) AND THE OUTSIDE AIR TEMPERATURE IS OUTSIDE THE ALLOWABLE RANGE, GENERATE A LEVEL 4 ALARM.
- IF THE UNIT IS IN STATE 2 AND THE MIXED AIR TEMPERATURE IS MORE THAN 2°F (ADJ.) ABOVE OR BELOW THE OUTDOOR AIR TEMPERATURE, GENERATE A LEVEL 4 ALARM.
- IF THE UNIT IS IN ANY OPERATING STATE OTHER THAN STATE 4 (HEATING) AND THE DISCHARGE AIR TEMPERATURE IS MORE THAN 2°F (ADJ.) ABOVE THE MIXED AIR TEMPERATURE.
- IF THE HOT-WATER COIL CONTROL VALVE IS GREATER THAN 99% OPEN AND THE DISCHARGE AIR TEMPERATURE IS 2°F (ADJ.) BELOW THE ACTIVE DISCHARGE AIR TEMPERATURE SETPOINT, GENERATE A LEVEL 4 ALARM.
- IF THE CHILLED-WATER COIL CONTROL VALVE IS GREATER THAN 99% OPEN AND THE DISCHARGE AIR TEMPERATURE IS 2°F (ADJ.) ABOVE THE ACTIVE DISCHARGE AIR TEMPERATURE SETPOINT, GENERATE A LEVEL 4 ALARM.
- IF ANY VALVE OR DAMPER FEEDBACK SIGNAL INDICATES THE ACTUAL POSITION IS MORE THAN 5% (ADJ.) DIFFERENT FROM THE COMMANDED POSITION, GENERATE A LEVEL 4 ALARM.

TESTING/COMMISSIONING OVERRIDES:
- FORCE PREHEAT COIL VALVE FULLY OPEN/CLOSED
- FORCE CHILLED-WATER COIL VALVE FULLY OPEN/CLOSED
- FORCE HUMIDIFIER VALVE FULLY OPEN/CLOSED

This sheet of drawings has not been reviewed for code compliance.

AIR HANDLING UNIT CONTROL SEQUENCES OF OPERATIONS, CONT'D:

SUPPLY AIR AND RETURN AIR FANS:
SUPPLY AIR AND RETURN AIR FANS SHALL BE ENERGIZED/DE-ENERGIZED FROM THE VFDS IN HAND POSITION OR THE DDC SYSTEM WHEN IN AUTO MODE. THE DDC CONTROL SYSTEM SHALL SENSE WHEN THE FANS ARE IN HAND POSITION BY THE FAN STATUS VERIFICATION AND INITIATE THE AHU CONTROL SEQUENCE.

IN AUTO MODE THE OUTSIDE AIR DAMPER SHALL OPEN TO ITS MINIMUM POSITION. ONCE THE DAMPER IS OPEN, THE SUPPLY FANS SHALL START, AND THE DDC SYSTEM SHALL SIGNAL THE ASSOCIATED RETURN FAN(S) TO START. IF THE FAN(S) ARE STARTED IN HAND THE OUTSIDE AIR DAMPER SHALL OPEN TO ITS MINIMUM POSITION IMMEDIATELY UPON SENSING FAN STATUS AS ON.

SUPPLY AND RETURN FANS SHALL SHUT DOWN FROM A SIGNAL FROM:
- THE FIRE ALARM PANEL THRU THE FIRE ALARM RELAY.
- THE RETURN AIR SMOKE DETECTOR(S).
- FREEZE STAT.
- THE HIGH OR LOW LIMIT STATIC PRESSURE SWITCHES.
- PREHEAT LOW LIMIT (38°F, ADJ.).

WHEN THE SUPPLY FAN(S) SHUT DOWN THE FOLLOWING SHALL OCCUR:
- THE OUTSIDE AIR DAMPER SHALL CLOSE.
- THE RELIEF DAMPER SHALL CLOSE.
- THE RETURN DAMPER SHALL OPEN.
- THE CHILLED WATER VALVE SHALL CLOSE.
- THE PREHEAT COIL SHALL REMAIN UNDER CONTROL OF THE PREHEAT COIL LEAVING AIR TEMPERATURE SENSOR.
- THE RETURN FAN(S) SHALL SHUTDOWN.

SUPPLY FAN SPEED CONTROL:
AIR HANDLERS WITH MULTIPLE SUPPLY FANS SHALL HAVE MULTIPLE VARIABLE FREQUENCY DRIVES (VFD), EACH CONTROLLING HALF THE FANS. THE VFD(S) SHALL BE CONTROLLED BY A DUCT MOUNTED STATIC PRESSURE TRANSMITTER MODULATING THE VFD(S) TO MAINTAIN A SUPPLY DUCT STATIC PRESSURE AT THE LOWEST SET POINT POSSIBLE AS DETERMINED BY THE TAB CONTRACTOR TO MEET EXISTING DOWNSTREAM VAV DEMANDS. THE VFD(S) SHALL OUTPUT THE % FULL SPEED TO THE DDC SYSTEM THROUGH THE NETWORK INTERFACE AND GENERATE AN LEVEL 4 "FAN/VFD FAULT" ALARM OF ANY FAN OR VFD FAILURE.

ON A FALL IN DIFFERENTIAL PRESSURE SENSED BY THE STATIC PRESSURE TRANSMITTER, THE DDC SYSTEM SHALL SPEED UP THE SUPPLY FAN(S) VFD(S) TO MAINTAIN THE DUCT STATIC PRESSURE AT SETPOINT. ON A RISE IN DIFFERENTIAL PRESSURE SENSED BY THE STATIC PRESSURE TRANSMITTER, THE DDC SYSTEM SHALL SLOW DOWN THE SUPPLY FAN(S) VFD(S) TO MAINTAIN THE DUCT STATIC PRESSURE SETPOINT. THE BAS SHALL GENERATE LEVEL 4 "HIGH/LOW SUPPLY STATIC PRESSURE" ALARMS IF THE MEASURED STATIC PRESSURE IS EITHER TOO HIGH OR TOO LOW IN RELATION TO THE SUPPLY DUCT STATIC PRESSURE SETPOINT (+/- 0.10 IN. W.C., ADJ.).

THE HIGH LIMIT STATIC PRESSURE SENSOR SHALL SHUTDOWN THE FAN(S) WHENEVER IT SENSES A HIGH STATIC PRESSURE (3.5 IN. W.C., ADJ.), GENERATE A LEVEL 2 "HIGH LIMIT SUPPLY STATIC PRESSURE" ALARM AT THE BAS FRONT-END, AND REQUIRE A LOCAL MANUAL RESET TO RESTART THE FAN(S). THE LOW LIMIT STATIC PRESSURE SENSOR SHALL SHUTDOWN THE FAN(S) WHENEVER IT SENSE A LOW STATIC PRESSURE (-2 IN. W.C., ADJ.), GENERATE A LEVEL 2 "LOW LIMIT SUPPLY STATIC PRESSURE" ALARM AT THE BAS FRONT-END, AND REQUIRE A LOCAL MANUAL RESET TO RESTART THE FAN(S).

RETURN FAN VOLUMETRIC TRACKING CONTROL:
AIR HANDLERS WITH MULTIPLE RETURN AIR FANS SHALL HAVE MULTIPLE VARIABLE FREQUENCY DRIVES (VFD), EACH CONTROLLING HALF THE FANS. THE RETURN AIR FAN(S) VFD(S) SHALL BE CONTROLLED FROM THE SUPPLY AIRFLOW TO MAINTAIN THE AIRFLOW OFFSET SOFTWARE SETPOINT (TO MAINTAIN BUILDING PRESSURIZATION, ADJ.) AIRFLOW OFFSET SOFTWARE SETPOINT SHALL BE 3,165 CFM (ADJ.) TO BE CONFIRMED WITH FINAL TEST AND BALANCE, ADJUST AS NECESSARY. USING AIRFLOW MEASURING DEVICES, SUPPLY AIRFLOW MEASURING TRANSMITTER, AND RETURN AIRFLOW MEASURING TRANSMITTER INSTALLED AT THE INLET OF THE SUPPLY AND RETURN FANS. THE SUPPLY AIRFLOW MEASURING TRANSMITTER SHALL MEASURE THE TOTAL AIRFLOW OF THE SUPPLY FAN(S) AND THE RETURN AIRFLOW MEASURING TRANSMITTER SHALL MEASURE THE TOTAL AIRFLOW OF THE RETURN FAN(S). THE AIRFLOW MEASURING TRANSMITTERS SHALL OUTPUT THE TOTAL AIRFLOW (CFM) READING TO THE DDC SYSTEM. THE DDC SYSTEM SHALL MODULATE THE SPEED OF THE RETURN AIR FAN(S) VFD(S) TO MAINTAIN THE AIRFLOW OFFSET SOFTWARE SETPOINT FROM THE SUPPLY AIRFLOW MEASUREMENT WITHIN 2%.

STATIC PRESSURE RESET:
THE SUPPLY AIR STATIC PRESSURE SHALL BE RESET BASED ON THE TERMINAL BOX AIR DAMPER POSITION. THE STATIC PRESSURE CONTROL LOOP SHALL POLL ALL TERMINAL BOXES IN THE SYSTEM AND REDUCE THE SUPPLY AIR STATIC PRESSURE SETPOINT BY 0.02 IN. W.C. (ADJ.) OVER A 5 MINUTE (ADJ.) TIME PERIOD UNTIL ANY TERMINAL BOX AIR DAMPER HAS OPENED TO 90% (ADJ.). THE SUPPLY AIR STATIC PRESSURE SETPOINT SHALL INCREASE 0.05 IN. W.C. (ADJ.) WHEN ANY TERMINAL BOX IN THE SYSTEM IS ABOVE 90% OPEN. THE CALCULATION MUST BE BETWEEN THE STATIC PRESSURE MINIMUM AND MAXIMUM STATIC PRESSURE SOFTWARE POINTS BEFORE WRITING OUT TO THE SUPPLY STATIC PRESSURE SETPOINT. ANY TERMINAL BOX IN THE SYSTEM MAY BE ADDED TO AN EXCEPTION LIST AND ELIMINATED FROM THE STATIC PRESSURE RESET CONTROL LOOP.

NOTE: NOT ALL TERMINAL BOXES ON ALL AIR HANDLERS ARE VARIABLE VOLUME BOXES OR TIED INTO THE EXISTING JCI BAS. THIS SEQUENCE IS TO BE PROGRAMMED BUT NOT ACTIVATED PENDING FUTURE VAV BOX AND CONTROL UPGRADES.

DISCHARGE AIR TEMPERATURE RESET:
THE DISCHARGE AIR TEMPERATURE SHALL BE RESET BASED ON THE COOLING OUTPUT OF THE TERMINAL BOX DETERMINED BY PERCENT OF FLOW BETWEEN MINIMUM AND MAXIMUM COOLING FOR VARIABLE VOLUME BOXES. THE SUPPLY TEMPERATURE CONTROL LOOP SHALL POLL ALL TERMINAL BOXES IN THE SYSTEM AND INCREASE THE DISCHARGE AIR TEMPERATURE SETPOINT 0.2°F (ADJ.) OVER A 5 MINUTE (ADJ.) TIME PERIOD UNTIL ANY TERMINAL BOX COOLING OUTPUT HAS EXCEEDED 95%. THE DISCHARGE AIR TEMPERATURE SETPOINT SHALL DECREASE BY 0.5°F (ADJ.) WHEN ANY TERMINAL BOX IN THE SYSTEM IS ABOVE 95%. IF THE RETURN AIR RELATIVE HUMIDITY EXCEEDS 60%, THE DISCHARGE AIR TEMPERATURE SETPOINT WILL RESET DOWN BY 0.5°F (ADJ.). THE MAXIMUM DISCHARGE AIR TEMPERATURE SETPOINT SHALL BE 58°F (ADJ.) WHEN OUTSIDE AIR TEMPERATURE IS GREATER THAN 55°F AND 62°F (ADJ.) WHEN OUTSIDE AIR TEMPERATURE IS LESS THAN 55°F. ANY TERMINAL BOX IN THE SYSTEM MAY BE ADDED TO AN EXCEPTION LIST AND ELIMINATED FROM THE DISCHARGE AIR TEMPERATURE RESET CONTROL LOOP.

AIR HANDLER OPERATING STATES:
THE AIR HANDLING UNIT SHALL OPERATE IN FOUR DISTINCT STATES. CRITERIA TO TRANSITION BETWEEN STATES ARE INDICATED BELOW. TO TRANSITION BETWEEN STATES THE SPECIFIED CRITERIA SHALL BE MET FOR AN ADJUSTABLE MINIMUM PERIOD OF TIME REFERRED TO AS "TRANSITION TIME". EACH INDIVIDUAL OPERATING STATE TO HAVE AN INDIVIDUAL PID CONTROL LOOP FOR THAT STATE.

STATE 1 – FULL COOLING COIL:
OUTSIDE AIR DAMPERS SHALL BE SET TO MINIMUM POSITION. THE COOLING COIL CONTROL VALVE SHALL BE CONTROLLED BY A CONTROL LOOP WITH THE DISCHARGE AIR TEMPERATURE TRANSMITTER AS THE INPUT, AND A SETPOINT EQUAL TO THE ACTIVE DISCHARGE AIR SETPOINT (DEFAULT 55°F, ADJ.). ON A RISE IN TEMPERATURE ABOVE THE ACTIVE DISCHARGE AIR TEMPERATURE SETPOINT, THE VALVE SHALL MODULATE OPEN. ON A FALL IN TEMPERATURE BELOW THE ACTIVE DISCHARGE AIR TEMPERATURE SETPOINT, THE VALVE SHALL MODULATE CLOSED. THE BAS SHALL GENERATE LEVEL 4 "HIGH/LOW DISCHARGE AIR TEMPERATURE" ALARMS WHENEVER THE DISCHARGE AIR TEMPERATURE IS EITHER TOO HIGH OR TOO LOW IN RELATION TO THE DISCHARGE AIR TEMPERATURE SETPOINT (+/- 2°F, ADJ.). THE COOLING COIL CONTROL LOOP SHALL CONTROL THE DISCHARGE AIR TEMPERATURE WITHIN +/- 0.5°F OF THE ACTIVE DISCHARGE AIR TEMPERATURE SETPOINT.

TRANSITION FROM STATE 1 TO STATE 2:
THERE SHALL BE AN ADJUSTABLE OUTSIDE AIR ECONOMIZER ENABLE TEMPERATURE (65°F) AND AN ADJUSTABLE DEAD BAND (+/-2°F). THE UNIT SHALL TRANSITION FROM STATE 1 TO STATE 2 WHENEVER THE OUTSIDE AIR TEMPERATURE IS BELOW THE ECONOMIZER ENABLE TEMPERATURE LESS THE DEAD BAND (65°F – 2°F = 63°F) FOR AN ADJUSTABLE TRANSITION TIME (5 MINUTES).

TRANSITION FROM STATE 2 TO STATE 1:
THE UNIT SHALL TRANSITION FROM STATE 2 TO STATE 1 WHENEVER THE OUTSIDE AIR TEMPERATURE IS ABOVE THE ECONOMIZER ENABLE TEMPERATURE PLUS THE DEAD BAND (65°F + 2°F = 67°F) FOR AN ADJUSTABLE TRANSITION TIME (5 MINUTES).

STATE 2 – FULL ECONOMIZER WITH COOLING COIL
OUTSIDE AIR AND RELIEF AIR DAMPERS SHALL BE FULLY OPEN AND THE RETURN AIR DAMPERS SHALL BE FULLY CLOSED. THE COOLING COIL CONTROL VALVE SHALL BE CONTROLLED BY A CONTROL LOOP WITH THE DISCHARGE AIR TEMPERATURE TRANSMITTER AS THE INPUT, AND A SETPOINT EQUAL TO THE ACTIVE DISCHARGE AIR SETPOINT (DEFAULT 55°F, ADJ.). IN THE EVENT OF A TRANSFER FROM STATE 3 TO STATE 2 DUE TO HUMIDIFIER VALVE CONTROL LOOP OUTPUT AS DESCRIBED BELOW, THE OUTSIDE AIR DAMPER SHALL START CLOSING UNTIL HUMIDIFIER CONTROL LOOP OUTPUT IS BELOW 90% (ADJ.). THE RETURN AIR DAMPER SHALL BE INTERLOCKED WITH THE OUTDOOR AIR DAMPER (INVERSELY PROPORTIONAL). THE RELIEF AIR DAMPER SHALL BE INTERLOCKED WITH THE OUTDOOR AIR DAMPER (DIRECTLY PROPORTIONAL).

TRANSITION FROM STATE 2 TO STATE 3:
THE UNIT SHALL TRANSITION FROM STATE 2 TO STATE 3 WHENEVER BOTH OF THE FOLLOWING OCCURS:
- THE COOLING COIL CONTROL LOOP HAS A COOLING VALUE OUTPUT OF 0% OPEN FOR AN ADJUSTABLE TRANSITION TIME (5 MINUTES).
- THE HUMIDIFIER CONTROL LOOP OUTPUT IS BELOW 90% FOR AN ADJUSTABLE TRANSITION TIME (5 MINUTES).

TRANSITION FROM STATE 3 TO STATE 2:
THE UNIT SHALL TRANSITION FROM STATE 3 TO STATE 2 WHENEVER EITHER OF THE FOLLOWING OCCURS:
- THE OUTSIDE AIR DAMPER CONTROL LOOP HAS AN OUTPUT OF 100% OPEN FOR AN ADJUSTABLE TRANSITION TIME (10 MINUTES).
- THE UNIT HUMIDIFIER VALVE CONTROL LOOP HAS BEEN AT 100% FOR AND ADJUSTABLE TRANSITION TIME (10 MINUTES).

STATE 3 – FREE COOLING:
THE COOLING COIL VALVE SHALL REMAIN CLOSED AND THE OUTSIDE AIR DAMPER, RELIEF AIR DAMPER, AND THE RETURN AIR DAMPER SHALL MODULATE TO MAINTAIN THE DISCHARGE AIR TEMPERATURE AT THE ACTIVE DISCHARGE AIR TEMPERATURE SETPOINT.

THE DISCHARGE AIR TEMPERATURE CONTROL LOOP SHALL HAVE THE UNIT DISCHARGE AIR TEMPERATURE TRANSMITTER AS THE INPUT AND A SETPOINT EQUAL TO THE ACTIVE DISCHARGE AIR TEMPERATURE SETPOINT (DEFAULT 55°F, ADJ.). ON A RISE IN DISCHARGE AIR TEMPERATURE ABOVE THE ACTIVE DISCHARGE AIR TEMPERATURE SETPOINT, THE OUTSIDE AIR AND RELIEF AIR DAMPERS SHALL MODULATE OPEN AND THE RETURN AIR DAMPER SHALL MODULATE CLOSED. ON A FALL IN DISCHARGE AIR TEMPERATURE BELOW THE ACTIVE DISCHARGE AIR TEMPERATURE SETPOINT, THE OUTSIDE AIR DAMPER AND RELIEF AIR DAMPERS SHALL MODULATE TO THEIR MINIMUM POSITION AND THE RETURN AIR DAMPER SHALL MODULATE OPEN. THE FREE COOLING CONTROL LOOP SHALL CONTROL THE DISCHARGE AIR TEMPERATURE TO WITHIN +/- 0.5°F OF THE ACTIVE DISCHARGE AIR TEMPERATURE SETPOINT.

TRANSITION FROM STATE 3 TO STATE 4:
THE UNIT SHALL TRANSITION FROM STATE 3 TO STATE 4 WHENEVER THE FREE COOLING CONTROL LOOP HAS SET THE OUTSIDE AIR DAMPER AT ITS MINIMUM VALUE FOR AN ADJUSTABLE TRANSITION TIME (5 MINUTES).

TRANSITION FROM STATE 4 TO STATE 3:
THE UNIT SHALL TRANSITION FROM STATE 4 TO STATE 3 WHENEVER THE PREHEAT VALVE CONTROL LOOP HAS AN OUTPUT OF 0% OPEN FOR AN ADJUSTABLE TRANSITION TIME (5 MINUTES).

STATE 4 – PREHEAT COIL NORMAL CONTROL:
WHEN THE UNIT IS IN STATE 4 THE PREHEAT COIL HEATING WATER VALVE SHALL BE CONTROLLED BY SELECTING THE MINIMUM OUTPUT OF THE DISCHARGE AIR TEMPERATURE CONTROL LOOP AND THE PREHEAT COIL LOW LIMIT TEMPERATURE CONTROL LOOP (AS DESCRIBED BELOW). THE PREHEAT COIL NORMAL CONTROL LOOP SHALL HAVE THE DISCHARGE AIR TEMPERATURE TRANSMITTER AS THE INPUT AND A DISCHARGE AIR TEMPERATURE SETPOINT OF 55°F (ADJ.).

PREHEAT COIL LOW LIMIT CONTROL:
THE PREHEAT COIL LOW LIMIT CONTROL LOOP SHALL BE ALWAYS OPERATIVE WHEN THE UNIT IS IN ANY STATE, INCLUDING WHEN THE UNIT IS DE-ENERGIZED, TO MAINTAIN A MINIMUM PREHEAT COIL LEAVING AIR TEMPERATURE. THE PREHEAT COIL LOW LIMIT CONTROL LOOP SHALL HAVE THE PREHEAT COIL LEAVING AIR TEMPERATURE TRANSMITTER AS THE INPUT AND THE PREHEAT COIL LOW LIMIT LEAVING AIR TEMPERATURE SETPOINT SHALL BE 42°F (ADJ.). THE BAS SHALL GENERATE A LEVEL 4 "PREHEAT COIL LOW LIMIT" ALARM IF THE PREHEAT COIL LEAVING AIR TEMPERATURE FALLS 1°F BELOW THE MINIMUM PREHEAT COIL LEAVING AIR TEMPERATURE SETPOINT. THE ALARM SHALL RESET WHEN THE PREHEAT COIL LEAVING AIR TEMPERATURE RISES 1°F ABOVE THE MINIMUM PREHEAT COIL LEAVING AIR TEMPERATURE SETPOINT.

IF THE PREHEAT COIL LEAVING AIR TEMPERATURE FALLS TO 38°F (ADJ.), THE BAS SHALL SHUT DOWN THE SUPPLY FAN(S) AND GENERATE A LEVEL 2 "PREHEAT COIL LOW LEAVING AIR TEMPERATURE SHUTDOWN" ALARM AT THE BAS FRONT-END. A SOFTWARE RESET SHALL BE REQUIRED TO RESTART THE UNIT.

PREHEAT COIL CIRCULATING PUMP:
THE PREHEAT COIL LEAVING AIR TEMPERATURE SHALL BE MONITORED BY THE BAS. WHEN THE PREHEAT COIL LEAVING AIR TEMPERATURE IS ABOVE 47°F (ADJ.) THE PREHEAT COIL CIRCULATING PUMP SHALL BE OFF. WHEN THE PREHEAT COIL LEAVING AIR TEMPERATURE DROPS BELOW 47°F (ADJ.) THE PREHEAT COIL CIRCULATING PUMP SHALL BE ENERGIZED AND REMAIN ON UNTIL THE PREHEAT COIL LEAVING AIR TEMPERATURE RISES TO ABOVE 50°F (ADJ.), REGARDLESS OF THE SUPPLY FAN(S) STATUS. A DIFFERENTIAL PRESSURE TRANSMITTER ACROSS THE PREHEAT COIL SHALL BE EMPLOYED TO SENSE THE PRESENCE OF FLOW THROUGH THE PREHEAT COIL. THE PREHEAT COIL CIRCULATING PUMP SHALL BE BALANCED TO WHERE THE DIFFERENTIAL PRESSURE SETPOINT ACHIEVES A VELOCITY OF 3 FEET PER SECOND FLOW THROUGH THE PREHEAT COIL. IF NO FLOW OR THE LOSS OF FLOW IS SENSED WHEN THE PREHEAT COIL CIRCULATING PUMP IS COMMANDED ON, THE PREHEAT COIL CONTROL VALVE SHALL FULLY OPEN AND THE BAS SHALL GENERATE A LEVEL 3 "PREHEAT COIL CIRCULATING PUMP FAILURE" AT THE FRONT-END.

GENERAL CONTROLS NOTES:

OWNER REQUIREMENTS:
- POINT NAMES FOR OBJECTS SHALL COMPLY WITH HCA HEALTHCARE *DESIGN AND ENGINEERING GUIDELINES FOR HOSPITALS 2023R1*, APPENDIX B-1 *POINT NAME STANDARDS*.
- GRAPHIC USER INTERFACE (GUI) FOR BUILDING AUTOMATION SYSTEMS (BAS) SHALL COMPLY WITH HCA HEALTHCARE *DESIGN AND ENGINEERING GUIDELINES FOR HOSPITALS 2023R1*, APPENDIX B-7 *BAS GRAPHICS*.

GENERAL REQUIREMENTS:
- THESE SEQUENCES ARE INTENDED TO BE PERFORMANCE BASED. IMPLEMENTATIONS THAT PROVIDE THE SAME FUNCTIONAL RESULT USING DIFFERENT UNDERLYING LOGIC WILL BE ACCEPTABLE.
- UNLESS OTHERWISE INDICATED, CONTROL LOOPS SHALL BE ENABLED AND DISABLED BASED ON THE STATUS OF THE SYSTEM BEING CONTROLLED TO PREVENT WINDUP.
- WHEN A CONTROL LOOP IS ENABLED OR RE-ENABLED, IT AND ALL ITS CONSTITUENTS (SUCH AS THE PROPORTIONAL AND INTEGRAL TERMS) SHALL BE SET INITIALLY TO A NEUTRAL VALUE.
- A CONTROL LOOP IN NEUTRAL SHALL CORRESPOND TO A CONDITION THAT APPLIES THE MINIMUM CONTROL EFFECT, I.E., VALVES/DAMPERS CLOSED, VFD AT MINIMUM SPEED, ETC.
- OUTDOOR AIR TEMPERATURE SENSORS AT AIR-HANDLER OUTDOOR AIR INTAKES SHALL BE CONSIDERED VALID ONLY WHEN THE SUPPLY FAN IS PROVEN ON AND THE UNIT IS IN OCCUPIED MODE OR IN ANY OTHER MODE WITH THE ECONOMIZER ENABLED.
- THE TERM "PROVEN" (I.E., "PROVEN ON" / "PROVEN OFF") SHALL MEAN THAT THE EQUIPMENT'S DI STATUS POINT (WHERE PROVIDED, E.G., CURRENT SWITCH, DP SWITCH, OR VFD STATUS) MATCHES THE STATE SET BY THE EQUIPMENT'S DO COMMAND POINT.
- THE TERM "SOFTWARE POINT" SHALL MEAN AN ANALOG VARIABLE, AND "SOFTWARE SWITCH" SHALL MEAN A DIGITAL (BINARY) VARIABLE, THAT ARE NOT ASSOCIATED WITH REAL I/O POINTS. THEY SHALL BE READ/WRITE CAPABLE (E.G., BACNET ANALOG VARIABLE AND BINARY VARIABLE).
- THE TERM "CONTROL LOOP" OR "LOOP" IS USED GENERICALLY FOR ALL CONTROL LOOPS. THESE WILL TYPICALLY BE PID LOOPS, BUT PROPORTIONAL PLUS INTEGRAL PLUS DERIVATIVE GAINS ARE NOT REQUIRED ON ALL LOOPS. UNLESS SPECIFICALLY INDICATED OTHERWISE, USE PROPORTIONAL ONLY (P-ONLY) LOOPS FOR LIMITING LOOPS. DO NOT USE THE DERIVATIVE TERM ON ANY LOOPS UNLESS FIELD TUNING IS NOT POSSIBLE WITHOUT IT.
- TO AVOID ABRUPT CHANGES IN EQUIPMENT OPERATION, THE OUTPUT OF EVERY CONTROL LOOP SHALL BE CAPABLE OF BEING LIMITED BY A USER ADJUSTABLE MAXIMUM RATE OF CHANGE, WITH A DEFAULT OF 25% PER MINUTE.
- ALL SETPOINTS, TIMERS, DEAD BANDS, PID GAINS, ETC. LISTED IN SEQUENCES SHALL BE ADJUSTABLE BY THE OPERATOR WITH APPROPRIATE ACCESS LEVEL WHETHER INDICATED AS ADJUSTABLE IN SEQUENCES OR NOT. SOFTWARE POINTS SHALL BE USED FOR THESE VARIABLES. FIXED SCALAR NUMBERS SHALL NOT BE EMBEDDED IN PROGRAMS EXCEPT FOR PHYSICAL CONSTANTS AND CONVERSION FACTORS.
- VALUES FOR ALL POINTS, INCLUDE REAL (HARDWARE) POINTS USED IN CONTROL SEQUENCES SHALL BE CAPABLE OF BEING OVERRIDDEN BY THE OPERATOR WITH APPROPRIATE ACCESS LEVEL (E.G., FOR TESTING AND COMMISSIONING). IF HARDWARE DESIGN PREVENTS THIS FOR HARDWARE POINTS, THEY SHALL BE EQUATED TO A SOFTWARE POINT, AND THE SOFTWARE POINT SHALL BE USED IN ALL SEQUENCES. EXCEPTIONS SHALL BE MADE FOR MACHINE OR LIFE SAFETY.
- UNLESS NOTED OTHERWISE, ALL DAMPER AND VALVE ACTUATORS SHALL BE PROVIDED BY THE TEMPERATURE CONTROL CONTRACTOR.
- A LAMINATED SET OF FINAL AS-BUILT SEQUENCES OF OPERATIONS AND CONTROL DIAGRAMS SHALL BE PROVIDE FOR EACH AHU AND LOCATED WITHIN THE ASSOCIATED CONTROL PANEL. AS-BUILT SEQUENCES OF OPERATIONS AND CONTROL DIAGRAMS SHALL ALSO BE STORED AND ACCESSIBLE WITHIN THE GUI FOR EACH AHU.

ALARM CLASSIFICATIONS:
- LEVEL 1 ALARM (LIFE SAFETY MESSAGE) REQUIRES ACKNOWLEDGEMENT FROM OPERATOR BEFORE IT CAN RETURN TO NORMAL. DEFAULT SUPPRESSION PERIOD = 0 MINUTES.
- LEVEL 2 ALARM (CRITICAL EQUIPMENT MESSAGE) REQUIRES ACKNOWLEDGEMENT FROM OPERATOR BEFORE IT CAN RETURN TO NORMAL. DEFAULT SUPPRESSION PERIOD = 5 MINUTES (ADJ.).
- LEVEL 3 ALARM (URGENT MESSAGE). DEFAULT SUPPRESSION PERIOD = 24 HOURS (ADJ.).
- LEVEL 4 ALARM (NORMAL MESSAGE). DEFAULT SUPPRESSION PERIOD = 7 DAYS (ADJ.).

ALARM REQUIREMENTS AND SUPPRESSION HIERARCHY:
- SPECIFIC ALARMS MAY BE SUPPRESSED AT THE GUI FOR THE SUPPRESSION PERIOD INDICATED ABOVE.
- ALL ALARMS SHALL INCLUDE A TIME/DATE STAMP, DESCRIPTION, EQUIPMENT TAGS, AND POSSIBLE CAUSES.
- EACH ALARM SHALL BE CONFIGURED IN TERMS OF LEVEL, ENTRY DELAY, EXIT DEAD BAND, AND POST SUPPRESSION PERIOD.
- EACH ALARM SHALL BE CATEGORIZED BY ITS RELATIONSHIP TO OTHER EQUIPMENT IN TERMS OF "SOURCE," "LOAD," OR "SYSTEM."
  - A COMPONENT IS A "SOURCE" IF IT PROVIDES RESOURCES TO A DOWNSTREAM COMPONENT.
  - A COMPONENT IS A "LOAD" IF IT RECEIVES RESOURCES FROM AN UPSTREAM COMPONENT.
  - THE SAME COMPONENT MAY BE BOTH A "LOAD" AND A "SOURCE."
  - A SET OF COMPONENTS IS A "SYSTEM" IF THEY SHARE A "LOAD" IN COMMON. IF A SINGLE COMPONENT ACTS AS A SOURCE FOR DOWNSTREAM LOADS, THEN THAT SINGLE-SOURCE COMPONENT SHALL BE DEFINED AS A "SYSTEM" OF ONE ELEMENT.
- FOR EACH SYSTEM AS DEFINED ABOVE, THERE SHALL BE A "SYSTEMOK" FLAG, WHICH IS EITHER TRUE OR FALSE.
- "SYSTEMOK" SHALL BE TRUE WHEN ALL OF THE FOLLOWING ARE TRUE:
  - THE SYSTEM IS PROVEN ON.
  - THE SYSTEM IS ACHIEVING ITS TEMPERATURE AND/OR PRESSURE SETPOINT(S) FOR AT LEAST 5 MINUTES.
  - THE SYSTEM IS READY AND ABLE TO SERVE ITS LOAD.
- "SYSTEMOK" SHALL BE FALSE WHILE THE SYSTEM IS STARTING UP OR WHEN A SYSTEM COMPONENT IS UNAVAILABLE AND DISRUPTING THE ABILITY OF THE SYSTEM TO SERVE ITS LOAD.
  - BY DEFAULT, LEVEL 1 THROUGH LEVEL 3 COMPONENT ALARMS SHALL INHIBIT "SYSTEMOK." LEVEL 4 COMPONENT ALARMS SHALL NOT AFFECT "SYSTEMOK."
  - THE OPERATOR SHALL HAVE THE ABILITY TO INDIVIDUALLY DETERMINE WHICH COMPONENT ALARAMS MAY OR MAY NOT INHIBIT "SYSTEMOK."
- WHEN "SOURCE" OR "SYSTEM" IS IN ALARM, SELECT ASSOCIATED "LOAD" ALARMS SHALL BE SUPPRESSED UNTIL THE "SOURCE" OR "SYSTEM" IS NO LONGER IN ALARM.
- ALARMS SHALL BE SORTABLE BASED ON LEVEL, TIME/DATE, AND CURRENT STATUS.
- OPERATORS SHALL HAVE THE ABILITY TO PUT ANY DEVICE IN/OUT OF MAINTENANCE MODE. ALL ALARMS ASSOCIATED WITH THE DEVICE IN MAINTENANCE MODE SHALL BE SUPPRESSED, WITH THE EXCEPTION OF LIFE SAFETY ALARMS. IF A DEVICE IS IN MAINTENANCE MODE, ISSUE A DAILY LEVEL 3 ALARM AT A SCHEDULED TIME INDICATING THAT THE DEVICE IS STILL IN MAINTENANCE MODE.

VARIABLE FREQUENCY DRIVE REQUIREMENTS:
- THE SPEED AO SENT TO A VFD SHALL BE CONFIGURED SUCH THAT 0% SPEED CORRESPONDS TO 0 HZ, AND 100% SPEED CORRESPONDS TO MAXIMUM SPEED CONFIGURED IN THE VFD (MAY ONLY EXCEED 60 HZ WITH ENGINEER APPROVAL).
- FOR EACH PIECE OF EQUIPMENT, THE MINIMUM SPEED SHALL BE STORED IN A SINGLE SOFTWARE POINT; IN THE CASE OF A HARD-WIRED VFD INTERFACE, THE MINIMUM SPEED SHALL BE THE LOWEST SPEED COMMAND SENT TO THE DRIVE BY THE BAS. MINIMUM SPEED SETPOINTS FOR ALL VFD-DRIVEN EQUIPMENT SHALL BE DETERMINED BY THE TESTING, ADJUSTING, AND BALANCING (TAB) CONTRACTOR. THE ACTIVE MINIMUM SPEED PARAMETER SHALL BE READ EVERY 60 MINUTES VIA THE DRIVE'S NETWORK INTERFACE. WHEN A MISMATCH BETWEEN THE DRIVE'S ACTIVE MINIMUM SPEED AND THE MINIMUM SPEED STORED IN THE SOFTWARE POINT IS DETECTED, THE MINIMUM SPEED STORED IN THE SOFTWARE POINT SHALL BE WRITTEN TO THE VFD VIA THE NETWORK INTERFACE TO RESTORE THE ACTIVE MINIMUM SPEED PARAMETER TO ITS DEFAULT VALUE, AND GENERATE A LEVEL 4 ALARM.
- FANS AND PUMPS ON A VFD SHALL HAVE A DECELERATION RATE OF 1 HZ/SECOND TO PREVENT NUISANCE TRIPS.

AIR-SIDE ECONOMIZER HIGH LIMITS:
AIR-SIDE ECONOMIZERS SHALL BE DISABLED WHENEVER THE OUTDOOR AIR CONDITIONS EXCEEDS 75°F DRY-BULB.

THERMAL ZONE REQUIREMENTS:
THE FOLLOWING APPLIES TO ALL SINGLE-ZONE SYSTEMS AND SUBZONE OF AIR-HANDLING SYSTEMS, SUCH AS VAV BOXES, FAN-POWERED BOXES, ETC.

SETPOINTS (AND ADJUSTMENTS):
- EACH ZONE SHALL HAVE SEPARATE OCCUPIED AND UNOCCUPIED HEATING AND COOLING SETPOINTS.
- THE DEAD BAND BETWEEN HEATING AND COOLING MUST BE A MINIMUM OF 5°F PER IECC.
- THE ACTIVE SETPOINTS SHALL BE BASED ON THE HCA HEALTHCARE *DESIGN AND ENGINEERING GUIDELINES FOR HOSPITALS 2023R1*, APPENDIX
- THE SOFTWARE SHALL PREVENT THE FOLLOWING:
  - THE HEATING SETPOINT FROM EXCEEDING THE COOLING SETPOINT MINUS 1°F.
  - THE UNOCCUPIED HEATING SETPOINT FROM EXCEEDING THE OCCUPIED HEATING SETPOINT.
  - THE UNOCCUPIED COOLING SETPOINT FROM EXCEEDING THE OCCUPIED COOLING SETPOINT.
- WHERE THE ZONE HAS A LOCAL SETPOINT ADJUSTMENT KNOB/BUTTON:
  - THE SETPOINT ADJUSTMENT OFFSETS ESTABLISHED BY THE OCCUPANT SHALL BE SOFTWARE POINTS THAT ARE PERSISTENT, BUT THE ACTUAL OFFSET USED IN CONTROL LOGIC SHALL BE ADJUSTED BASED ON LIMITS AND MODES AS DESCRIBED BELOW.
  - THE ADJUSTMENT SHALL BE CAPABLE OF BEING LIMITED IN SOFTWARE. AS A DEFAULT, THE ACTIVE OCCUPIED SETPOINTS SHALL BE LIMITED BETWEEN +/- 3°F OF THE DEFAULT OCCUPIED SETPOINTS.
  - THE ACTIVE HEATING AND COOLING SETPOINTS SHALL BE INDEPENDENTLY ADJUSTABLE, RESPECTING THE LIMITS AND ANTI-OVERLAP LOGIC ABOVE. IF THE ZONE THERMOSTAT PROVIDES ONLY A SINGLE SETPOINT ADJUSTMENT, THEN THE ADJUSTMENT SHALL MOVE BOTH THE ACTIVE HEATING AND COOLING SETPOINTS UPWARD OR DOWNWARD BY THE SAME AMOUNT, WITHIN THE LIMITS DESCRIBED ABOVE.
  - THE ADJUSTMENT SHALL ONLY AFFECT OCCUPIED SETPOINTS IN OCCUPIED MODE, WARM-UP MODE, AND COOLDOWN MODE AND SHALL HAVE NO IMPACT ON SETPOINTS IN ALL OTHER MODES.

OCCUPANCY SENSORS (FOR ZONES THAT HAVE AN OCCUPANCY SWITCH):
- WHEN THE SWITCH INDICATES THAT THE SPACE HAS BEEN UNPOPULATED FOR 5 MINUTES CONTINUOUSLY DURING THE OCCUPIED MODE, THE ACTIVE HEATING SETPOINT SHALL BE DECREASED BY 1°F AND THE ACTIVE COOLING SETPOINT SHALL BE INCREASED BY 1°F.
- WHEN THE SWITCH INDICATES THAT THE SPACE HAS BEEN POPULATED FOR 1 MINUTE CONTINUOUSLY, THE ACTIVE HEATING AND COOLING SETPOINTS SHALL BE RESTORED TO THEIR OCCUPIED SETPOINT VALUES.

SETPOINT ADJUSTMENT HIERARCHY: THE FOLLOWING ADJUSTMENT RESTRICTIONS SHALL PREVAIL IN ORDER FROM HIGHEST TO LOWEST PRIORITY:
1. SETPOINT OVERLAP RESTRICTION
2. ABSOLUTE LIMITS ON LOCAL SETPOINT ADJUSTMENT
3. SCHEDULED SETPOINTS BASED ON ZONE GROUP MODE

LOCAL OVERRIDE:
- WHEN THERMOSTAT OVERRIDE BUTTONS ARE DEPRESSED, THE CALL FOR OCCUPIED MODE OPERATION SHALL BE SENT TO THE ZONE GROUP CONTROL FOR 60 MINUTES.

CONTROL LOOPS:
- TWO SEPARATE CONTROL LOOPS, THE COOLING LOOP AND HEATING LOOP, SHALL OPERATE TO MAINTAIN SPACE TEMPERATURE AT SETPOINT.
  - THE HEATING LOOP SHALL BE ENABLED WHENEVER THE SPACE TEMPERATURE IS BELOW THE CURRENT ZONE HEATING SETPOINT TEMPERATURE AND DISABLED WHEN SPACE TEMPERATURE IS ABOVE THE CURRENT ZONE HEATING SETPOINT AND THE LOOP OUTPUT IS ZERO FOR 30 SECONDS. THE LOOP MAY REMAIN ACTIVE AT ALL TIMES IF PROVISIONS ARE MADE TO MINIMIZE INTEGRAL WINDUP.
  - THE COOLING LOOP SHALL BE ENABLED WHENEVER THE SPACE TEMPERATURE IS ABOVE THE CURRENT ZONE COOLING SETPOINT TEMPERATURE AND DISABLED WHEN SPACE TEMPERATURE IS BELOW THE CURRENT ZONE COOLING SETPOINT TEMPERATURE AND THE LOOP OUTPUT IS ZERO FOR 30 SECONDS. THE LOOP MAY REMAIN ACTIVE AT ALL TIMES IF PROVISIONS ARE MADE TO MINIMIZE INTEGRAL WINDUP.
- THE COOLING LOOP SHALL MAINTAIN THE SPACE TEMPERATURE AT THE ACTIVE COOLING SETPOINT. THE OUTPUT OF THE LOOP SHALL BE A SOFTWARE POINT RANGING FROM 0% (NO COOLING) TO 100% (FULL COOLING).
- THE HEATING LOOP SHALL MAINTAIN THE SPACE TEMPERATURE AT THE ACTIVE HEATING SETPOINT. THE OUTPUT OF THE LOOP SHALL BE A SOFTWARE POINT RANGING FROM 0% (NO HEATING) TO 100% (FULL HEATING).
- LOOPS SHALL USE A PROPORTIONAL PLUS INTEGRAL LOGIC OR OTHER TECHNOLOGY OF SIMILAR PERFORMANCE. PROPORTIONAL-ONLY CONTROL IS NOT ACCEPTABLE, ALTHOUGH THE INTEGRAL GAIN SHALL BE SMALL RELATIVE TO THE PROPORTIONAL GAIN. PROPORTIONAL AND INTEGRAL GAINS SHALL BE ADJUSTABLE BY THE OPERATOR.

ZONE STATES:
ZONE STATE SHALL BE INDICATED ON GUI.
- HEATING: WHEN THE OUTPUT OF THE SPACE HEATING LOOP IS NONZERO AND THE OUTPUT OF THE COOLING LOOP IS EQUAL TO ZERO.
- COOLING: WHEN THE OUTPUT OF THE SPACE COOLING LOOP IS NONZERO AND THE OUTPUT OF THE HEATING LOOP IS EQUAL TO ZERO.
- DEAD BAND: WHEN NOT IN EITHER HEATING OR COOLING.

ZONE ALARMS:
THE FOLLOWING ZONE TEMPERATURE ALARMS SHALL BE PROVIDED FOR EACH ZONE:
HIGH-TEMPERATURE ALARMS:
- IF THE ZONE IS 5°F BELOW THE HEATING SETPOINT FOR 10 MINUTES, GENERATE A LEVEL 3 ALARM.
- IF THE ZONE IS 3°F BELOW THE HEATING SETPOINT FOR 10 MINUTES, GENERATE A LEVEL 4 ALARM.

LOW-TEMPERATURE ALARMS:
- IF THE ZONE IS 3°F ABOVE THE COOLING SETPOINT FOR 10 MINUTES, GENERATE A LEVEL 4 ALARM.
- IF THE ZONE IS 5°F ABOVE THE COOLING SETPOINT FOR 10 MINUTES, GENERATE A LEVEL 3 ALARM.

SUPPRESS ZONE TEMPERATURE ALARMS AS FOLLOWS:
- ZONE TEMPERATURE ALARMS SHALL BE SUPPRESSED FOR 10 MINUTES PER °F AFTER EACH ADJUSTMENT, BUT NO LONGER THAN 120 MINUTES.
- ZONE TEMPERATURE ALARMS SHALL BE SUPPRESSED WHEN THE ZONE GROUP IS IN WARMUP OR COOLDOWN MODES.

ZONE TRENDING:
- ALL BUILDING AUTOMATION POINTS ASSOCIATED WITH TERMINAL HEAT TRANSFER EQUIPMENT AND VAV BOXES SHALL BE CONTINUOUSLY MONITORED AND 5 MINUTE ROLLING AVERAGES SHALL BE RECORDED WITHIN A SINGLE TREND.
- THE VAV BOX AIRFLOWS ASSOCIATED WITH EACH AHU SHALL BE TOTALED AND THE TOTAL SUPPLY VAV BOX AIRFLOW SHALL BE DISPLAYED ON THE AHU GUI AND TRENDED.
- EVERY MONTH, THE TREND DATA SHALL BE ARCHIVED TO A SEPARATE FILE AT THE OPERATOR WORKSTATION THAT IS NOT OVERWRITTEN.

ZONE GROUP NOTES:

GENERAL REQUIREMENTS:
- UNLESS NOTED OTHERWISE, THE FOLLOWING ZONE GROUP REQUIREMENTS SHALL APPLY TO ALL TERMINAL HEAT TRANSFER EQUIPMENT AND VAV BOXES.
- ALL ZONES SHALL BE ASSIGNED TO A "ZONE GROUP."

ZONE GROUP ASSIGNMENTS:
- EACH ZONE SERVED BY A SINGLE-ZONE AIR HANDLER SHALL BE ITS OWN ZONE GROUP.
- ROOMS OCCUPIED 24/7, SUCH AS COMPUTER ROOMS, NETWORKING CLOSETS, MECHANICAL ROOMS, AND ELECTRICAL ROOMS SERVED BY THE AIR HANDLER SHALL BE ASSIGNED TO A DEDICATED ZONE GROUP. THESE ZONES DO NOT APPLY TO THE ZONE GROUP RESTRICTIONS BELOW.
- A ZONE GROUP SHALL NOT SPAN FLOORS.
- A ZONE GROUP SHALL NOT EXCEED 25,000 FT^2.
- A ZONE SHALL NOT BE A MEMBER OF MORE THAN ONE ZONE GROUP.
- MISCELLANEOUS EQUIPMENT, SUCH AS EXHAUST FANS, SERVING SPACES WITHIN A ZONE GROUP SHALL BE INCLUDED IN THE ZONE GROUP.
- MISCELLANEOUS EQUIPMENT MAY BE INCLUDED IN MULTIPLE ZONE GROUPS IF IT SERVES SPACES IN MULTIPLE ZONE GROUPS.
- EACH ZONE GROUP SHALL BE CAPABLE OF HAVING SEPARATE OCCUPANCY SCHEDULES AND OPERATING MODES FROM OTHER ZONE GROUPS.
- ALL ZONES IN EACH ZONE GROUP SHALL BE IN THE SAME ZONE GROUP OPERATING MODE. IF ONE ZONE IN A ZONE GROUP IS PLACED IN ANY OPERATING MODE OTHER THAN UNOCCUPIED MODE, ALL ZONES IN THAT ZONE GROUP SHALL ENTER THAT MODE.
- A ZONE GROUP MAY BE IN ONLY ONE MODE AT A GIVEN TIME.

OPERATING MODES:
ZONE GROUPS SHALL OPERATE IN ONE OF THE FOLLOWING MODES AT ALL TIMES:

OCCUPIED MODE: OCCUPIED MODE SHALL BE SHALL INITIATED WHEN ANY OF THE FOLLOWING IS TRUE.
- THE TIME OF DAY IS BETWEEN THE SCHEDULED OCCUPIED START AND STOP TIMES.
- THE SCHEDULES HAVE BEEN OVERRIDDEN BY THE OCCUPANT OVERRIDE SYSTEM.
- THE LOCAL OVERRIDE TIMER HAS BEEN ACTIVATED.

UNOCCUPIED MODE: UNOCCUPIED MODE SHALL BE INITIATED WHEN ANY OF THE FOLLOWING IS TRUE.
- THE TIME OF DAY IS OUTSIDE THE SCHEDULED OCCUPIED START AND STOP TIMES.
- THE SCHEDULES HAVE BEEN OVERRIDDEN BY THE OCCUPANT OVERRIDE SYSTEM.

WARM-UP MODE: FOR EACH ZONE, THE BAS SHALL CALCULATE THE REQUIRED WARM-UP TIME BASED ON THE ZONE'S HEATING SETPOINT, CURRENT ZONE TEMPERATURE, OUTDOOR AIR TEMPERATURE, AND MASS FACTOR.
- THE MASS FACTOR SHALL BE ADJUSTABLE FOR EACH ZONE IN THE BAS.
- WARM-UP MODE SHALL START BASED ON THE ZONE WITH THE LONGEST CALCULATED WARM-UP TIME REQUIREMENT, BUT NO EARLIER THAN 3 HOURS BEFORE THE SCHEDULED OCCUPIED PERIOD AND SHALL END AT THE SCHEDULED OCCUPANCY START.

COOLDOWN MODE: FOR EACH ZONE, THE BAS SHALL CALCULATE THE REQUIRED COOLDOWN TIME BASED ON THE ZONE'S COOLING SETPOINT, CURRENT ZONE TEMPERATURE, OUTDOOR AIR TEMPERATURE, AND MASS FACTOR.
- THE MASS FACTOR SHALL BE ADJUSTABLE FOR EACH ZONE IN THE BAS.
- COOLDOWN MODE SHALL START BASED ON THE ZONE WITH THE LONGEST CALCULATED COOLDOWN TIME REQUIREMENT, BUT NO EARLIER THAN 3 HOURS BEFORE THE SCHEDULED OCCUPIED PERIOD AND SHALL END AT THE SCHEDULED OCCUPANT START.

SETBACK MODE: DURING UNOCCUPIED MODE, IF ANY FIVE ZONES (OR ALL ZONE IF FEWER THAN FIVE) IN THE ZONE GROUP FALL BELOW THE UNOCCUPIED HEATING SETPOINTS, OR IF THE AVERAGE ZONE TEMPERATURE OF THE ZONE GROUP FALLS BELOW THE AVERAGE UNOCCUPIED HEATING SETPOINT, THE ZONE GROUP SHALL ENTER SETBACK MODE UNTIL ALL SPACES ARE 2°F ABOVE THE UNOCCUPIED SETPOINTS.

FREEZE PROTECTION SETBACK MODE: DURING UNOCCUPIED MODE, IF ANY SPACE FALLS BELOW 40°F, A LEVEL 3 ALARM SHALL BE GENERATED AND THE ZONE GROUP SHALL ENTER FREEZE PROTECTION SETBACK MODE UNTIL ALL SPACES ARE ABOVE 45°F.

SETUP MODE: DURING UNOCCUPIED MODE, IF ANY FIVE ZONE (OR ALL ZONES IF FEWER THAN FIVE) IN THE ZONE GROUP RISE ABOVE THE UNOCCUPIED COOLING SETPOINTS, OR IF THE AVERAGE ZONE TEMPERATURE OF THE ZONE GROUP RISES ABOVE THE AVERAGE UNOCCUPIED COOLING SETPOINT. THE ZONE GROUP SHALL ENTER SETUP MODE UNTIL ALL SPACES IN THE ZONE GROUP ARE 2°F BELOW THE UNOCCUPIED SETPOINTS.

Salas O'Brien
salasobrien.com
Greenwood Village
9250 East Costilla Avenue, Suite 220
Greenwood Village, CO 80112

Registration:

CONFIDENTIAL
THIS DRAWING AND ASSOCIATED DESIGN ELEMENTS ARE CONFIDENTIAL AND THE PROPERTY OF SALAS O'BRIEN, WHICH RETAINS ALL COMMON LAW, COPYRIGHT, STATUTORY AND OTHER RIGHTS THERETO. ANY UNAUTHORIZED USE, REUSE OR REPRODUCTION IS PROHIBITED. UNLESS OTHERWISE AGREED TO BY SALAS O'BRIEN, THIS DRAWING (AS WELL AS ANY COPIES) SHALL BE RETURNED TO SALAS O'BRIEN UPON REQUEST.

PROFESSIONAL SEAL
COLORADO LICENSED
MICHAEL P THOMPSON
53150
PROFESSIONAL ENGINEER

ISSUE DATE	DESCRIPTION
10/31/2025	PERMIT

2561-22631-00
THE MEDICAL CENTER OF AURORA

IR AHU-15 Replacement

1501 S. Potomac St,
Aurora, CO 80012

REVISIONS

Δ	DESCRIPTION	DATE

CHECKED BY	DRAWN BY
BH	XW, ZP

SHEET NAME
MECHANICAL CONTROLS

SHEET NUMBER: M006
REVISION:

Autodesk Docs://061_2561-22631-00_TMCA IR AHU-15_ME_R25/SO_2561-22631-00_TMCA IR AHU-15_ME_R25.rvt
10/31/2025 12:58:52 PM

MECHANICAL SPECIFICATIONS

GENERAL PROVISIONS FOR HVAC WORK

1. WORK UNDER THIS SECTION IS SUBJECT TO THE REQUIREMENTS OF THE CONTRACT DOCUMENTS, INCLUDING THE DRAWINGS, GENERAL AND SUPPLEMENTARY CONDITIONS OF THE ARCHITECTURAL SPECIFICATIONS.
2. THE DRAWINGS AND SPECIFICATIONS SHALL BE UNDERSTOOD TO COVER SYSTEMS OF HEATING, VENTILATION AND AIR CONDITIONING, INSULATION, BUILDING AUTOMATION SYSTEMS AND TEMPERATURE CONTROL, AND TESTING AND BALANCING. THE DRAWINGS AND SPECIFICATIONS ARE TO BE TAKEN TOGETHER. WORK SPECIFIED AND NOT SHOWN, OR WORK SHOWN AND NOT SPECIFIED, SHALL BE AS BINDING AS THOUGH REQUIRED BY BOTH, THE DRAWINGS AND SPECIFICATIONS.
3. MINOR ITEMS AND ACCESSORIES OR DEVICES REASONABLY INFERABLE AS NECESSARY TO THE COMPLETE AND PROPER OPERATION OF ANY SYSTEM SHALL BE PROVIDED FOR SUCH SYSTEMS, WHETHER OR NOT THEY ARE SPECIFICALLY CALLED FOR BY THE SPECIFICATIONS OR THE DRAWINGS. THE CONTRACTOR SHALL PROCURE AND PAY FOR ALL NECESSARY PERMITS AND LICENSE FEES, MAKE ARRANGEMENTS FOR INSPECTIONS, PAY ALL FEES IN CONNECTION THEREWITH, EXCEPT BUILDING PERMIT, AND PAY ALL APPLICABLE FEDERAL, STATE AND LOCAL TAXES.
4. THE CONTRACTOR SHALL PROCURE AND PAY FOR ALL NECESSARY PERMITS AND LICENSE FEES, MAKE ARRANGEMENTS FOR INSPECTIONS, PAY ALL FEES IN CONNECTION THEREWITH, EXCEPT BUILDING PERMIT, AND PAY ALL APPLICABLE FEDERAL, STATE AND LOCAL TAXES.
5. THE CONTRACTOR SHALL GUARANTEE ALL WORK TO BE FREE FROM DEFECTS IN MATERIALS AND WORKMANSHIP FOR A PERIOD OF ONE (1) YEAR IN ACCORDANCE WITH THE GENERAL CONDITIONS, UNLESS A LONGER PERIOD IS STIPULATED UNDER SPECIFIED HEADINGS. HE SHALL REPAIR OR REPLACE, AT NO ADDITIONAL COST TO THE OWNER, ANY MATERIAL OR EQUIPMENT DEVELOPING DEFECTS. REPAIRS OR REPLACEMENTS SHALL BEAR AN ADDITIONAL TWELVE (12) MONTHS GUARANTEE FROM TIME REPAIR OR REPLACEMENT IS COMPLETE. THIS REQUIREMENT SHALL BE BINDING, EVEN THOUGH IT WILL EXCEED PRODUCT GUARANTEES NORMALLY FURNISHED BY SOME MANUFACTURERS.
6. THE CONTRACTOR SHALL SUBMIT HIS OWN AND EACH MANUFACTURERS' WRITTEN CERTIFICATES AND WARRANTIES WHICH INDICATE THAT EACH ITEM OF EQUIPMENT FURNISHED, COMPLIES WITH ALL REQUIREMENTS OF THE DRAWINGS AND SPECIFICATIONS. GUARANTEES AND WARRANTIES SHALL COMMENCE FROM THE DATE OF THE SIGNED ACCEPTANCE BY THE OWNER OF A PARTICULAR ITEM OF EQUIPMENT OR A PARTICULAR DEFINED PORTION OF THE WORK.
7. ALL WORK SHALL BE INSTALLED IN CONFORMITY WITH ALL GOVERNMENTAL JURISDICTIONAL AUTHORITIES REGULATIONS, LAWS, RULES, OR ORDINANCES IN EFFECT AND GOVERNING SAME; SUCH RULES AND REGULATIONS AND LOCAL ORDINANCES TO BE CONSIDERED PART OF SPECIFICATIONS. MECHANICAL CONTRACTOR SHALL BE HELD STRICTLY RESPONSIBLE FOR ANY VIOLATION OF SAME AND SHALL CHANGE HIS WORK TO CONFORM WITHOUT ADDITIONAL COST TO OWNER.
8. ALL WORK SHALL ALSO CONFORM TO THE PUBLISHED STANDARDS OF THE NATIONAL FIRE PROTECTION ASSOCIATION, AND ELECTRICAL WORK AND EQUIPMENT SHALL CONFORM TO REQUIREMENTS OF THE CURRENT ISSUE OF THE NATIONAL ELECTRICAL CODE. ALL MATERIALS, IN GENERAL, SHALL BE UNDERWRITERS' LABORATORIES LISTED AND SHALL BEAR UL LABEL WHERE LABELING SERVICE IS AVAILABLE.
9. WHERE JURISDICTIONAL RULES REQUIRE ASSISTANCE OF MECHANICS OF TRADES OTHER THAN THOSE ORDINARILY EMPLOYED BY A PARTICULAR MECHANICAL CONTRACTOR IN THE HANDLING, STORAGE OR SETTING OF SPECIAL EQUIPMENT, THE MECHANICAL CONTRACTOR SHALL EMPLOY SUCH TRADESMEN SO AS TO BE IN CONFORMANCE WITH LOCAL JURISDICTIONAL AGREEMENTS.
10. IT IS CONTEMPLATED THAT WORK INCLUDED BE DONE DURING REGULAR WORKING HOURS ON A "STRAIGHT TIME" BASIS. ANY WORK REQUIRING OVERTIME THE CONTRACTOR SHALL INCLUDE THE COST FOR SUCH OVERTIME WORK AS A PART OF THE BASE BID PROPOSAL.
11. THE MECHANICAL CONTRACTOR SHALL BE RESPONSIBLE FOR ANY INTERFERENCE WITH OR DAMAGE TO ANY EXISTING UTILITIES AND SHALL REPAIR OR REPLACE ANY DAMAGED UTILITIES WITH THE LEAST POSSIBLE DELAY AND HOLD THE OWNER HARMLESS IN THE EVENT THAT THERE IS ANY DAMAGE.
12. CERTAIN ITEMS OF EQUIPMENT ARE SPECIFIED ON THE DRAWING EQUIPMENT SCHEDULES OR IN NOTES AS THE PRODUCT OF A SPECIFIC MANUFACTURER INCLUDING THE TRADE NAME, SIZE AND MODEL NUMBER. THIS IS TO ESTABLISH A STANDARD OF QUALITY AND TO MAKE PROVISIONS FOR POWER, SPACE ALLOWANCE, AND CONNECTIONS BY OTHER TRADES.
13. IF ALTERNATE MANUFACTURERS OTHER THAN THOSE NAMED IN THE DOCUMENTS ARE PROPOSED TO BE USED, THE BIDDER SHALL LIST SUCH OTHER ALTERNATE MANUFACTURERS ALONG WITH ANY COST ADDITIONS OR DEDUCTIONS FROM THE BASE BID PROPOSAL. IF THE OWNER ACCEPTS THE ALTERNATE MANUFACTURER THE CONTRACT WILL SO STATE. IF THE CONTRACT DOES NOT CONTAIN THE NAMES OF ALTERNATE MANUFACTURERS THE CONTRACTOR SHALL SUBMIT ONLY MANUFACTURERS NAMED IN THE DOCUMENTS.
14. IF THE MECHANICAL CONTRACTOR PROPOSES TO USE THE PRODUCT OF A MANUFACTURER OTHER THAN THE ONE NAMED IN THE DOCUMENTS HE SHALL BE RESPONSIBLE FOR THAT ITEM OF EQUIPMENT FITTING IN PLACE WITH ADEQUATE CLEARANCES. FURTHER, IF DIFFERENT CONNECTIONS OR PROVISIONS ARE REQUIRED TO BE FURNISHED BY OTHER TRADES FROM THE PRODUCT NAMED IN THE DOCUMENTS, THE MECHANICAL CONTRACTOR SHALL BE RESPONSIBLE FOR NOTIFYING THE OTHER TRADES OF ANY CHANGES AND IF ADDITIONAL COSTS ARE REQUIRED BY THE OTHER TRADES HE SHALL PAY SUCH COSTS.
15. THE ENGINEER HAS NO CONTRACTUAL RESPONSIBILITY IN CONNECTION WITH JOB SITE SAFETY MEASURES OR PRECAUTIONS AS RELATED TO MEANS, METHODS, TECHNIQUES, SEQUENCES OR PROCEDURES IN THAT REGARD. THE MECHANICAL CONTRACTOR SHALL BE SOLELY AND COMPLETELY RESPONSIBLE FOR CONDITIONS OF THE JOB SITE, INCLUDING SAFETY OF ALL PERSONS AND PROPERTY DURING PERFORMANCE OF THE WORK. THIS REQUIREMENT WILL APPLY CONTINUOUSLY AND NOT BE LIMITED TO NORMAL WORKING HOURS. THE ARCHITECT/ENGINEER'S OBSERVATIONS OF THE MECHANICAL CONTRACTOR'S PERFORMANCE ARE NOT INTENDED TO INCLUDE REVIEW OF THE ADEQUACY OF THE MECHANICAL CONTRACTOR'S SAFETY MEASURES IN, ON OR NEAR THE CONSTRUCTION SITE. IT SHALL BE THE MECHANICAL CONTRACTOR'S RESPONSIBILITY TO COMPLY WITH "SAFETY AND HEALTH REGULATIONS FOR CONSTRUCTION", VOLUME 36, NO.75, PART II OF THE FEDERAL REGISTER BY THE U.S. DEPARTMENT OF LABOR. THE MECHANICAL CONTRACTOR SHALL BE RESPONSIBLE FOR PROVIDING ALL SUCH SAFETY MEASURES AND SHALL CONSULT WITH THE STATE OR FEDERAL SAFETY INSPECTOR FOR INTERPRETATION WHENEVER IN DOUBT AS TO WHETHER SAFE CONDITIONS DO OR DO NOT EXIST; OR WHETHER HE IS OR IS NOT IN COMPLIANCE WITH STATE OR FEDERAL REGULATIONS.
16. THE DRAWINGS ARE ESSENTIALLY DIAGRAMMATIC IN NATURE AND SHOW GENERAL ARRANGEMENT OF ALL EQUIPMENT, PIPING, DUCTWORK, SERVICES, ETC. BECAUSE OF THE SMALL SCALE OF THE DRAWINGS, IT IS NOT POSSIBLE TO SHOW ALL OFFSETS, FITTINGS, AND ACCESSORIES WHICH MAY BE REQUIRED. FURNISH ALL FITTINGS, AND ACCESSORIES THAT MAY BE REQUIRED TO MEET SUCH CONDITIONS AND TO FIT WORK OF OTHER TRADES.
17. FURNISH THREE (3) SETS OF CUTS OR BROCHURES, OR ONE SEPIA REPRODUCIBLE SHOP DRAWING AND TWO PRINTS SHOWING ALL DETAILS OF CONSTRUCTION FOR DUCT LAYOUTS AND EQUIPMENT AND ASSOCIATED WIRING DIAGRAMS TO BE FURNISHED.
18. REVIEW OF THE SHOP DRAWINGS IS RENDERED AS A SERVICE ONLY AND SHALL NOT BE CONSIDERED AS A GUARANTEE OF MEASUREMENTS OR OF BUILDING CONDITIONS; NOR SHALL IT BE CONSTRUED AS RELIEVING THE MECHANICAL CONTRACTORS OF BASIC RESPONSIBILITIES UNDER HIS CONTRACT.
19. ALL EQUIPMENT SUBMITTED AS SHOP DRAWINGS SHALL BE APPROVED BY THE GOVERNING JURISDICTIONAL AUTHORITIES PREVIOUS TO SUBMITTAL. SUBMISSION OF A SHOP DRAWING SHALL MEAN THAT APPROVAL HAS BEEN OBTAINED FOR INSTALLATION OF THE EQUIPMENT SUBMITTED FOR REVIEW.
20. AT COMPLETION OF THE PROJECT, ALL CHANGES AND DEVIATIONS FROM THE CONTRACT DOCUMENTS SHALL BE RECORDED BY THE MECHANICAL CONTRACTOR ON AS-BUILT DRAWINGS. SUPPLY TO THE ARCHITECT/ENGINEER FOUR PAPER BLUE LINE SETS PRIOR TO PROJECT COMPLETION.
21. THE OWNER, ARCHITECT, ENGINEER OR OTHERS WHO THEY MAY DESIGNATE SHALL BE PRIVILEGED TO ENTER AND OCCUPY THE BUILDING OR PORTIONS THEREOF, AT ANY TIME PRIOR TO COMPLETION OF THE MECHANICAL WORK WITHOUT PREJUDICE.
22. BEFORE MAKING ANY INSTALLATION, THE MECHANICAL CONTRACTOR SHALL CONFER WITH ALL OTHER CONTRACTORS WHOSE WORK MAY AFFECT THE WORK UNDER THEIR SECTIONS AND MAKE THE NECESSARY CHANGES TO AVOID INTERFERENCES OR IMPROPER EFFECT ON WORK TO BE PERFORMED BY ALL OTHER TRADES. IN THE EVENT THAT INTERFERENCES DEVELOP, THE ARCHITECT'S DECISION WILL BE FINAL AND NO ADDITIONAL COMPENSATION WILL BE ALLOWED FOR MOVING OF MISPLACED PIPING, DUCTS, CONDUIT AND/OR EQUIPMENT.
23. ALL MATERIALS AND/OR EQUIPMENT SHALL BE INSTALLED IN ACCORDANCE WITH MANUFACTURER'S RECOMMENDATIONS AND INSTRUCTIONS.
24. EACH MAJOR COMPONENT OF THE EQUIPMENT SHALL HAVE THE MANUFACTURER'S NAME, ADDRESS, MODEL NUMBER AND RATING ON A PLATE SECURELY AFFIXED IN A CONSPICUOUS PLACE. THE NAMEPLATE OF A DISTRIBUTING AGENT IS NOT ACCEPTABLE. ASME CODE RATINGS, OR OTHER DATA WHICH IS DIE-STAMPED INTO THE SURFACE OF THE EQUIPMENT SHALL BE IN A VISIBLE LOCATION.
25. USE ONLY NEW MATERIALS OF THE BEST QUALITY OF THEIR RESPECTIVE KINDS; LABOR SHALL BE DONE IN A THOROUGH WORKMANLIKE MANNER TO THE SATISFACTION OF THE ARCHITECT.
26. MATERIALS SHALL BE MANUFACTURED BY REPUTABLE MANUFACTURERS WHO HAVE BEEN PRODUCING THIS TYPE OF MATERIAL TO BE SOLD IN MAJOR CITIES IN THE UNITED STATES FOR A PERIOD OF AT LEAST FIVE (5) YEARS, UNLESS OTHERWISE NOTED HEREIN.
27. THE INSTALLATION OF ANY ACCESS PANEL IS STRICTLY LIMITED TO LOCATIONS AS INDICATED ON THE ARCHITECTURAL DRAWINGS OR APPROVED BY ARCHITECT.
28. FIRE STOPPING SHALL BE REQUIRED AT ALL FLOOR AND FIRE RATED WALL/PARTITION PENETRATIONS. FIRE STOPPING SYSTEMS SHALL BE AS DETAILED ON ARCHITECTURAL DRAWINGS.
29. ALL SHOP FABRICATED AND FACTORY BUILT EQUIPMENT NOT GALVANIZED OR PROTECTED BY PLATING SHALL BE CLEANSED AND GIVEN ONE (1) SHOP COAT OF ZINC-CHROMATE PRIMER BEFORE DELIVERY OR DURING CONSTRUCTION. ALL FINISH PAINTING SHALL BE DONE BY THE GENERAL CONTRACTOR.
30. DUCTWORK BEHIND THE GRILLES, REGISTERS, DIFFUSERS, ETC. WHICH IS EXPOSED TO VIEW THROUGH THE UNITS, SHALL BE GIVEN ONE (1) COAT OF PRIMER AND A FINISH COAT OF FLAT BLACK PAINT.
31. ALL WORKMANSHIP SHALL BE FIRST CLASS IN EVERY RESPECT AND SHALL BE PERFORMED ONLY BY SKILLED MECHANICS, RECOGNIZED AS SUCH IN THEIR RESPECTIVE TRADES.
32. FURNISH NECESSARY SCAFFOLDING, STAGING OR CRIBBING REQUIRED FOR THE COMPLETION OF THE WORK. SUCH SCAFFOLDING, ETC., SHALL BE REMOVED FROM THE PREMISES WHEN ITS USE IS NO LONGER REQUIRED ON THE JOB.
33. SHOULD DAMAGE TO ANY MECHANICAL, ELECTRICAL OR ARCHITECTURAL PART OF THE BUILDING OCCUR, PAY ALL COSTS TO THE RESPECTIVE SUBCONTRACTORS AFFECTED ON THE JOB TO MAKE REPAIRS AND/OR TEMPORARY CONNECTIONS REQUIRED.
34. OPENINGS MADE IN FIRE RATED WALL, CEILING OR FLOOR SHALL BE EFFECTIVELY CLOSED AND REPAIRED SO THE FIRE RATING IS NOT REDUCED BELOW ORIGINAL FIRE RATING REQUIREMENTS.
35. FURNISH 8 COMPLETE PORTFOLIOS TO THE OWNER'S REPRESENTATIVE, CONTAINING AS- BUILT SHOP DRAWINGS, TEST AND BALANCE REPORTS, OPERATING INSTRUCTIONS, WARRANTIES, PARTS LISTS, WIRING DIAGRAMS, ETC., ON ALL EQUIPMENT FURNISHED UNDER THIS CONTRACTOR.
36. THE CONTRACTOR SHALL FURNISH A COMPETENT INSTRUCTOR TO ADVISE THE OWNER'S OPERATING PERSONNEL AS TO THE PROPER OPERATION, SERVICING, ETC., OF ALL EQUIPMENT AND SYSTEMS INSTALLED.
37. AT THE COMPLETION OF THE WORK, CONTRACTOR SHALL CLEAN ALL OF HIS WORK, EQUIPMENT, ETC., FREE FROM DUST, ETC., AND LEAVE THE WORK IN GOOD HOUSEKEEPING FASHION IN A MANNER ACCEPTABLE TO THE OWNER'S REPRESENTATIVE. PROVIDE NECESSARY FITTINGS, LAMPS, VALVES, ETC., AND LEAVE THE WORK CLEAN AND IN PERFECT OPERATING CONDITION.
38. WHEN DIRECTED, DURING CONSTRUCTION PERIOD, OPERATE SYSTEM WITH ALL FILTERS IN PLACE AND ALL CAULKING COMPLETE. DO NOT OPERATE OR PERMIT SUPPLY SYSTEM TO BE OPERATED WITHOUT FILTERS.
39. UNDER NO CIRCUMSTANCES SHALL ANY ITEMS OF NEW AIR HANDLING EQUIPMENT BE OPERATED FOR TEMPORARY HEAT OR VENTILATION WITHOUT FILTERS IN PLACE. IF THE UNIT IS USED BEFORE CONSTRUCTION IS COMPLETED, THE FILTERS SHALL BE REPLACED, THE UNIT AND COILS SHALL BE CLEANED AND THIS SET OF FILTERS SHALL NOT BE CONSIDERED AS THE SPARE SET OF FILTERS HEREINAFTER SPECIFIED.
40. THE CONTRACTORS SHALL EXPEDITE THE INSTALLATION OF THEIR RESPECTIVE SYSTEMS AS THAT HEATING SYSTEMS CAN BE USED FOR TEMPORARY HEAT AS SOON AS THE SPACE IS ENCLOSED, THEY SHALL COOPERATE WITH THE GENERAL CONTRACTOR IN PROVIDING TEMPORARY HEAT AS REQUIRED.
41. ALL TENDERS SUBMITTED ON THESE DRAWINGS AND SPECIFICATIONS SHALL BE BASED ON NEW MATERIALS AND APPARATUS OF MAKE AND QUALITY AS SPECIFIED. IF THE CONTRACTOR DESIRES, HE MAY ALSO TENDER ON MATERIALS AND APPARATUS WHICH SHALL BE OF SAME QUALITY AND OF SIMILAR SPECIFICATIONS TO THOSE AS HEREIN SPECIFIED, IN WHICH CASE HE SHALL STATE IN HIS TENDER ALL ADDITIONS OR DEDUCTIONS INVOLVED IN THE ALTERNATE MATERIALS AND APPARATUS, AND SHALL SPECIFY THE NAME OR MAKE ON WHICH HIS ALTERNATE IS BASED. WHEN NO ALTERNATES ARE GIVEN OR ACCEPTED PRIOR TO CONTRACT AWARD, THE MAKE SPECIFIED SHALL BE INSTALLED.

OWNER REQUIREMENTS

1. INNOVATION MEMORANDUM #7: ALL PIPING RELATED ITEMS ARE TO BE PURCHASED THROUGH FERGUSON ENTERPRISE. CONTACT: BETTINA DAWSON, BETTINA.DAWSON@FERGUSON.COM, (615) 316-1920. PIPING RELATED ITEMS INCLUDED IN PURCHASING AGREEMENT:
   - A. VALVES, PIPE, AND FITTINGS FOR PLUMBING SYSTEMS
   - B. PIPE AND FITTINGS FOR MEDICAL GAS SYSTEMS
   - C. PIPE AND FITTINGS FOR ACID WASTE SYSTEMS (INCLUDING ACID DILUTION TANK)
   - D. VALVES, PIPE, AND FITTINGS FOR DE-IONIZED WATER SYSTEMS (INCLUDING BACKFLOW PREVENTER)
   - E. VALVES, PIPE, AND FITTINGS FOR HVAC HYDRONIC SYSTEMS
   - F. VALVES, PIPE, AND FITTINGS FOR STEAM AND CONDENSATE SYSTEMS
2. INNOVATION MEMORANDUM #9: ALL VARIABLE AIR VOLUME AIR TERMINAL UNITS SHALL BE ONE OF THE FOLLOWING:
   - A. JOHNSON CONTROLS INC. VAV READY UNITS (VRU) WHEN THE EXISTING FACILITY ALREADY USES JOHNSON CONTROLS OR FOR NEW FACILITIES. CONTACT: KEVIN TOLBERT, KEVIN.P.TOLBERT@JCI.COM, (478) 952-8740.
   - B. SIEMENS INDUSTRY ZONE CONTROL UNITS (ZCU) WHEN THE EXISTING FACILITY ALREADY USES SIEMENS. CONTACT: EDWARD TAMBORNINO, ED.TAMBORNINO@SIEMENS.COM, (847) 271-8136.
3. INNOVATION MEMORANDUM #11: ALL CHILLERS FOR CENTRAL ENERGY PLANT AND OPERATING SUITES SHALL BE YORK/JCI. CONTACT: KEVIN TOLBERT, KEVIN.P.TOLBERT@JCI.COM, (478) 952-8740.
4. INNOVATION MEMORANDUM #12: ALL DX AND HYDRONIC AIR HANDLING UNITS SHALL BE YORK/JCI. CONTACT: KEVIN TOLBERT, KEVIN.P.TOLBERT@JCI.COM, (478) 952-8740.
5. A METHOD OF PROCEDURE (MOP) IS REQUIRED FOR ANY SHUTDOWN OF BUILDING INFRASTRUCTURE SYSTEMS WHICH MAY AFFECT BUSINESS OPERATIONS AT LEAST 2 WEEKS AHEAD OF SHUTDOWN.

COMMON WORK RESULTS FOR HVAC

1. THESE SPECIFICATIONS AND ACCOMPANYING DRAWINGS ARE TO COVER THE FURNISHINGS OF ALL LABOR, MATERIALS, EQUIPMENT, APPARATUS, SERVICE PERMANENT AND TEMPORARY FACILITIES AS NECESSARY TO THE HEATING AND AIR CONDITIONING WORK INVOLVED IN THE FURNISHING, INSTALLING, TESTING, ADJUSTING, RETESTING, READJUSTMENT AS REQUIRED AND DIRECTED, AND PLACING INTO APPROVED SATISFACTORY OPERATION THE COMPLETE RESPECTIVE SYSTEMS AS SHOWN ON THE DRAWINGS, CALLED FOR IN THE SPECIFICATIONS, AND AS REQUIRED BY THE JOB CONDITIONS.
2. THE WORK PERFORMED UNDER THIS SECTION, INCLUDING EQUIPMENT AND MATERIALS, SHALL CONFORM TO THE FOLLOWING AGENCIES:
   - A. CITY OF AURORA BUILDING CODE
   - B. STATE OF COLORADO CODES
   - C. UL - UNDERWRITERS' LABORATORIES, INC.
   - D. ASME - AMERICAN SOCIETY OF MECHANICAL ENGINEERS.
   - E. ASHRAE - AMERICAN SOCIETY OF HEATING, REFRIGERATING AND AIR-CONDITIONING ENGINEERS
   - F. AHRI - AIR CONDITIONING, HEATING, AND REFRIGERATION INSTITUTE
   - G. ASTM - AMERICAN SOCIETY FOR TESTING MATERIALS
   - H. AABC - ASSOCIATED AIR BALANCE COUNCIL
   - I. NFPA - NATIONAL FIRE PROTECTION ASSOCIATION
   - J. SMACNA - SHEET METAL AND AIR CONDITIONING CONTRACTORS NATIONAL ASSOCIATION
   - K. NEC - NATIONAL ELECTRIC CODE
   - L. ANSI - AMERICAN NATIONAL STANDARD INSTITUTE
   - M. OSHA - OCCUPATIONAL SAFETY AND HEALTH ADMINISTRATION
3. FURNISH AND INSTALL ALL PIPING, DUCTWORK, AND INSULATION AS HEREINAFTER SPECIFIED.
4. FURNISH CUTTING AND CORING FOR INSTALLATION OF HANGERS, PIPING, DUCTS AND EQUIPMENT.
5. OPENINGS MADE IN FIRE RATED WALL, CEILING OR FLOOR SHALL BE EFFECTIVELY CLOSED AND REPAIRED SO THE FIRE RATING IS NOT REDUCED BELOW ORIGINAL FIRE RATING REQUIREMENTS.

COMMON WORK RESULTS FOR HVAC (CONT'D)

6. EXERCISE CARE IN TRANSPORTING AND HANDLING TO AVOID DAMAGE TO FIXTURES, EQUIPMENT AND MATERIALS.
7. STORE MATERIALS ON THE SITE SO AS TO PREVENT DAMAGE.
8. KEEP EQUIPMENT AND MATERIALS CLEAN, DRY AND FREE FROM DELETERIOUS CONDITIONS.
9. DISCONNECT, DEMOLISH, AND REMOVE HVAC SYSTEMS, EQUIPMENT, AND COMPONENTS INDICATED TO BE REMOVED.
10. IF PIPE, INSULATION, OR EQUIPMENT TO REMAIN IS DAMAGED IN APPEARANCE OR IS UNSERVICEABLE, REMOVE DAMAGED OR UNSERVICEABLE PORTIONS OR REPLACE WITH NEW PRODUCTS OF EQUAL CAPACITY AND QUALITY.
11. INSTALL EQUIPMENT LEVEL AND PLUMB, PARALLEL AND PERPENDICULAR TO OTHER BUILDING SYSTEMS AND COMPONENTS IN EXPOSED INTERIOR SPACES, UNLESS OTHERWISE INDICATED.
12. INSTALL HVAC EQUIPMENT TO FACILITATE SERVICE, MAINTENANCE, AND REPAIR OR REPLACEMENT OF COMPONENTS. CONNECT EQUIPMENT FOR EASE OF DISCONNECTING, WITH MINIMUM INTERFERENCE TO OTHER INSTALLATIONS.
13. ANCHOR EQUIPMENT TO CONCRETE BASE ACCORDING TO EQUIPMENT MANUFACTURER'S WRITTEN INSTRUCTIONS.
14. MIX AND INSTALL GROUT FOR HVAC EQUIPMENT BASE BEARING SURFACES, PUMP AND OTHER EQUIPMENT BASE PLATES, AND ANCHORS.
15. UNLESS OTHERWISE SPECIFIED, ALL CONDUIT, WIRING, DISCONNECTS, STARTERS, THERMAL OVERLOAD HEATERS, HOLDING COILS, REMOTE PUSHBUTTON STATIONS, "HAND-OFF-AUTO" AND MULTI-SPEED SWITCHES, AND PILOT LIGHTS FOR ELECTRICALLY OPERATED MECHANICAL EQUIPMENT, INCLUDING FINAL CONNECTIONS SHALL BE PROVIDED BY ELECTRICAL CONTRACTOR.
16. FOLLOWING THE COMPLETION OF SYSTEM TESTS, ALL EQUIPMENT AND MATERIALS OF INSTALLATION SHALL BE THOROUGHLY CLEANED AND INSPECTED BY INSTALLER.

HVAC DUCTWORK AND ACCESSORIES

1. COMPLY WITH SMACNA'S "HVAC DUCT CONSTRUCTION STANDARDS - METAL AND FLEXIBLE" FOR ACCEPTABLE MATERIALS, MATERIAL THICKNESS, AND DUCT CONSTRUCTION METHODS, UNLESS OTHERWISE INDICATED. SHEET METAL MATERIALS SHALL BE FREE OF PITTING, SEAM MARKS, ROLLER MARKS, STAINS, DISCOLORATIONS, AND OTHER IMPERFECTIONS.
2. METAL DUCTWORK SHALL BE GALVANIZED SHEET STEEL; LOCK-FORMING QUALITY; COMPLYING WITH ASTM A 653/A 653M AND HAVING G60 (Z180) COATING DESIGNATION; DUCTS SHALL HAVE MILL-PHOSPHATIZED FINISH FOR SURFACES EXPOSED TO VIEW.
3. INTERNAL LINING OF DUCTWORK SHALL NOT BE PERMITTED.
4. SEALANT MATERIALS SHALL BE WATER-BASED JOINT AND SEAM SEALANT: FLEXIBLE, ADHESIVE SEALANT, RESISTANT TO UV LIGHT WHEN CURED, UL 723 LISTED, AND COMPLYING WITH NFPA REQUIREMENTS FOR CLASS 1 DUCTS. HARDCAST IRON-GRIP OR EQUAL.
5. FLANGED JOINT MASTIC: ONE-PART, ACID-CURING, SILICONE, ELASTOMERIC JOING SEALANT COMPLYING WITH ASTM C 920, TYPE S, GRADE NS, CLASS 25, USE O.
6. FLANGE GASKETS: BUTYL RUBBER OR EPDM POLYMER WITH POLYISOBUTYLENE PLASTICIZER.
7. COMPLY WITH SMACNA'S "HVAC DUCT CONSTRUCTION STANDARDS - METAL AND FLEXIBLE," CHAPTER 5, "HANGERS AND SUPPORTS." HANGER AND SUPPORT BUILDING ATTACHMENTS SHALL BE CONCRETE INSERTS, POWER-COATED FASTENERS, OR STRUCTURAL-STEEL FASTENERS APPROPRIATE FOR CONSTRUCTION MATERIALS TO WHICH HANGERS ARE BEING ATTACHED. HANGER MATERIALS SHALL BE GALVANIZED SHEET STEEL OR THREADED STEEL ROD. DUCT ATTACHMENTS SHALL BE SHEET METAL SCREWS, BLIND RIVETS, OR SELF-TAPPING METAL SCREWS COMPATIBLE WITH DUCT MATERIALS. TRAPEZE AND RISER SUPPORTS SHALL BE STEEL SHAPES COMPLYING WITH ASTM A 36/A 36M.
8. RECTANGULAR DUCT:
   - A. DUCT, ELBOWS, TRANSITIONS, OFFSETS, BRANCH CONNECTIONS, ETC. FABRICATED ACCORDING TO SMACNA'S STANDARDS.
   - B. LENGTHS APPROPRIATE TO REINFORCEMENT AND RIGIDITY CLASS REQUIRED FOR PRESSURE CLASS.
   - C. SHALL NOT EXCEED DEFLECTION LIMITS ACCORDING TO SMACNA STANDARDS.
   - D. TRANSVERSE JOINTS: PREFABRICATED SLIDE-ON JOINTS AND COMPONENTS CONSTRUCTED USING MANUFACTURER'S GUIDELINES FOR MATERIAL THICKNESS, REINFORCEMENT SIZE AND SPACING, AND JOINT REINFORCEMENT.
   - E. FORMED-ON FLANGES: CONSTRUCT ACCORDING TO SMACNA'S STANDARDS USING CORNER, BOLT, CLEAT, AND GASKET DETAILS. MAXIMUM DUCT SIZE 30 INCHES (750 MM) WIDE AND UP TO 2-INCH WG (500-PA) PRESSURE CLASS. LONGITUDINAL SEAMS TO BE PITTSBURGH LOCK SEALED WITH NONCURING POLYMER SEALANT.
   - F. CROSS BREAK OR CROSS BEAD DUCT SIDES 19 INCHES (480 MM) AND LARGER AND 0.0359 INCH (0.9 MM) THICK OR LESS, WITH MORE THAN 10 SQ. FT (0.93 SQ. M) OF NON-BRACED PANEL AREA.
9. ROUND DUCT:
   - A. ROUND DUCT MAY BE LONGITUDINAL OR SPIRAL LOCK SEAM, FABRICATED ACCORDING TO SMACNA'S STANDARDS.
   - B. DUCT JOINTS FOR DUCTS UP TO 20 INCHES (500 MM) IN DIAMETER SHALL BE INTERIOR, CENTER-BEADED SLIP COUPLING, SEALED BEFORE AND AFTER FASTENING, ATTACHED WITH SHEET METAL SCREWS.
   - C. DUCT JOINTS FOR DUCTS 21 TO 72 INCHES (535 TO 1830 MM) IN DIAMETER SHALL BE THREE-PIECE, GASKETED, FLANGED JOINT CONSISTING OF TWO INTERNAL FLANGES WITH SEALANT AND ONE EXTERNAL CLOSURE BAND WITH GASKET.
10. MITERED ELBOW WITH TURNING VANE ARE NOT PERMITTED UNLESS SPACE DOES NOT PERMIT USE OF RADIUS ELBOWS. USE RADIUS ELBOW WITH CENTERLINE RADIUS AT LEAST AS GREAT AS DUCT WIDTH.
11. SIZES OF NEW DUCT SHOWN ON DRAWINGS ARE FREE AIRWAYS SIZES, NOT OUTSIDE DIMENSIONS.
12. STATIC-PRESSURE CLASSES:
    - A. SUPPLY DUCTS (POSITIVE PRESSURE) UPSTREAM TERMINAL BOXES: 4-INCH WG (1000-PA).
    - B. SUPPLY DUCTS (POSITIVE PRESSURE) DOWNSTREAM TERMINAL BOXES: 1-INCH WG (250 PA).
    - C. RETURN DUCTS (NEGATIVE PRESSURE): 2-INCH WG (500 PA).
    - D. RETURN DUCTS (NEGATIVE PRESSURE) WITHIN 100-FEET OF FAN: 3-INCH (750 PA).
    - E. EXHAUST DUCTS (NEGATIVE PRESSURE): 2-INCH WG (500 PA).
13. ALL DUCTWORK SHALL BE EXTERNALLY SEALED IN ACCORDANCE TO SMACNA CLASS A.
14. INSTALL ROUND DUCTS IN LENGTHS NOT LESS THAN 12 FEET (3.7 M) UNLESS INTERRUPTED BY FITTINGS.
15. INSTALL DUCTS WITH FEWEST POSSIBLE JOINTS.
16. INSTALL FABRICATED FITTINGS FOR CHANGES IN DIRECTIONS, SIZE, AND SHAPE AND FOR CONNECTIONS.
17. INSTALL COUPLINGS TIGHT TO DUCT WALL SURFACE WITH A MINIMUM OF PROJECTIONS INTO DUCT. SECURE COUPLINGS WITH SHEET METAL SCREWS. INSTALL SCREWS AT INTERVALS OF 12 INCHES (300 MM), WITH A MINIMUM OF 3 SCREWS IN EACH COUPLING.
18. INSTALL DUCTS, UNLESS OTHERWISE INDICATED, VERTICALLY AND HORIZONTALLY AND PARALLEL AND PERPENDICULAR TO BUILDING LINES; AVOID DIAGONAL RUNS.
19. INSTALL DUCTS CLOSE TO WALLS, OVERHEAD CONSTRUCTION, COLUMNS, AND OTHER STRUCTURAL AND PERMANENT ENCLOSURE ELEMENTS OF BUILDING.
20. INSTALL DUCTS WITH A CLEARANCE OF 1 INCH (25 MM), PLUS ALLOWANCE FOR INSULATION THICKNESS.
21. CONCEAL DUCTS FROM VIEW IN FINISHED SPACES. DO NOT ENCASE HORIZONTAL RUNS IN SOLID PARTITIONS UNLESS SPECIFICALLY INDICATED.
22. COORDINATE LAYOUT WITH SUSPENDED CEILING, FIRE- AND SMOKE-CONTROL DAMPERS, LIGHTING LAYOUTS, AND SIMILAR FINISHED WORK.
23. SEAL ALL TRANSVERSE JOINTS, LONGITUDINAL SEAMS AND DUCT WALL PENETRATIONS BEFORE EXTERNAL INSULATION IS APPLIED. APPLY SEALANT TO MALE END CONNECTORS BEFORE INSERTION, AND AFTERWARD TO COVER ENTIRE JOINT AND SHEET METAL SCREWS.
24. ELECTRICAL EQUIPMENT SPACES: ROUTE DUCTS TO AVOID PASSING THROUGH TRANSFORMER VAULTS AND ELECTRICAL EQUIPMENT SPACES AND ENCLOSURES.
25. NON-FIRE-RATED PARTITION PENETRATIONS: WHERE DUCTS PASS THROUGH INTERIOR PARTITIONS AND EXTERIOR WALLS AND ARE EXPOSED TO VIEW, CONCEAL SPACES BETWEEN CONSTRUCTION OPENINGS AND DUCTS OR DUCT INSULATION WITH SHEET METAL FLANGES OF SAME METAL THICKNESS AS DUCTS. OVERLAP OPENINGS ON 4 SIDES BY AT LEAST 1-1/2 INCHES (38 MM).
26. FIRE-RATED PARTITION PENETRATIONS: WHERE DUCTS PASS THROUGH INTERIOR PARTITIONS AND EXTERIOR WALLS, INSTALL APPROPRIATELY RATED FIRE DAMPERS, SLEEVES, AND FIRESTOPPING SEALANT.
27. SUPPORT HORIZONTAL DUCTS WITHIN 24 INCHES (600 MM) OF EACH ELBOW AND WITHIN 48 INCHES (1200 MM) OF EACH BRANCH INTERSECTIONS.
28. SUPPORT VERTICAL DUCTS AT MAXIMUM INTERVALS OF 16 FEET (5 M) AND AT EACH FLOOR.
29. INSTALL UPPER ATTACHMENTS TO STRUCTURES WITH AN ALLOWABLE LOAD NOT EXCEEDING ONE-FORTH OF FAILURE (PROOF-TEST) LOAD.
30. DO NOT USE POWER-ACTUATED CONCRETE FASTENERS FOR LIGHTWEIGHT-AGGREGATE CONCRETES OR FOR SLABS LESS THAN 4 INCHES (100 MM) THICK.
31. MAKE CONNECTIONS TO EQUIPMENT WITH FLEXIBLE CONNECTORS.
32. LEAK TEST AT LEAST 50% OF DUCTWORK. MAXIMUM ALLOWABLE LEAKAGE CLASS 3 FOR ROUND DUCTS, CLASS 12 FOR RECTANGULAR FOR PRESSURE CLASSES LOWER THAN OR EQUAL TO 2-INCH WG (500 PA), AND CLASS 6 FOR RECTANGULAR DUCTS FOR PRESSURE CLASSES FROM 2- TO 10-INCH WG (500 TO 2500 PA).
33. PERFORM CLEANING PRIOR TO AIR BALANCING. VENT VACUUMING SYSTEM TO THE OUTSIDE. INCLUDE FILTRATION TO CONTAIN DEBRIS REMOVED FROM HVAC SYSTEM AND LOCATE EXHAUST AWAY FROM AIR INTAKES AND BUILDING ENTRIES.

HYDRONIC PIPING AND SPECIALTIES

1. PIPE AND FITTING MATERIALS:
   - A. PRESSURE-SEAL FITTINGS, MECHANICAL FORMED TEES, AND GROOVED MECHANICAL-JOINT FITTINGS ARE UNACCEPTABLE. JOINTS TO BE FLANGED, SOLDERED, BRAZED, THREADED OR WELDED AS INDICATED.
   - B. DRAWN-TEMPER COPPER TUBING: ASTM B 88, TYPE L (ASTM B 88M, TYPE B).
   - C. WROUGHT-COPPER FITTINGS AND UNIONS: ASME B16.22.
   - D. STEEL PIPE: ASTM A 53, A 53M, BLACK STEEL WITH PLAIN ENDS; TYPE, GRADE, AND WALL THICKNESS AS INDICATED.
   - E. CAST-IRON THREADED FITTINGS: ASME B16.4; CLASSES 125 AND 250 AS INDICATED.
   - F. CAST-IRON FLANGES AND FLANGED FITTINGS: ASME B16.1, CLASSES 25, 125, AND 250 AS INDICATED; RAISED GROUND FACE, AND BOLT HOLES SPOT FACED.
   - G. WROUGHT-STEEL FITTINGS: ASTM A 234/A 234M, WALL THICKNESS TO MATCH ADJOINING PIPE.
   - H. WROUGHT CAST- AND FORGED-STEEL FLANGES AND FLANGED FITTINGS: ASME B16.5, INCLUDING BOLTS, NUTS, AND GASKETS, MATERIAL GROUP 1.1, BEVEL-WELDED OR BUTT WELDING END CONNECTIONS, AND RAISED FACE.
   - I. STEEL PIPE NIPPLES: ASTM A 733, MADE OF SAME MATERIALS AND WALL THICKNESSES AS PIPE IN WHICH THEY ARE INSTALLED.
2. JOINING MATERIALS:
   - A. PIPE-FLANGE GASKET MATERIALS: SUITABLE FOR CHEMICAL AND THERMAL CONDITIONS OF PIPING SYSTEM CONTENTS. ASME B16.21, NONMETALLIC, ASBESTOS FREE, 1/8-INCH (3.2-MM) MAXIMUM THICKNESS.
   - B. FLANGE BOLTS AND NUTS: ASME B18.2.1, CARBON STEEL.
   - C. SOLDER FILLER METALS: ASTM B 32, LEAD-FREE ALLOYS. INCLUDE WATER-FLUSHABLE FLUX ACCORDING TO ASTM B 813.
   - D. BRAZING FILLER METALS: AWS A5.8, BCUP SERIES, COPPER-PHOSPHORUS ALLOYS FOR JOINING COPPER WITH COPPER.
   - E. WELDING FILLER METALS: AWS D10.12/D10.12M FOR WELDING MATERIALS APPROPRIATE FOR WALL THICKNESS AND CHEMICAL ANALYSIS OF STEEL PIPE BEING WELDED.
3. DIELECTRIC FITTINGS SHALL BE USED BETWEEN STEEL AND COPPER PIPING WITH END CONNECTIONS THAT MATCH PIPING SYSTEM MATERIALS.
4. CALIBRATED-ORIFICE, BALANCING VALVES SHALL HAVE BRONZE BODY; BALL (BRASS OR STAINLESS STEEL) OR PLUG (RESIN) TYPE WITH CALIBRATED ORIFICE OR VENTURI; PTFE SEAT; THREADED END CONNECTIONS; INTEGRAL PRESSURE GAGE CONNECTIONS; LEVER HANDLE STYLE WITH MEMORY STOP; MINIMUM 125 PSIG (860 KPA) CWP RATING; AND MAXIMUM 250°F (121° C) OPERATING TEMPERATURE.
5. DIAPHRAGM-OPERATED SAFETY VALVES SHALL HAVE BRONZE OR BRASS BODY; GLASS AND CARBON-FILLED PTFE DISC; BRASS SEAT; EPDM O-RING STEM SEALS; EPT DIAPHRAGM; BRASS AND RUBBER WETTED, INTERNAL WORK PARTS; STAINLESS STEEL INLET STRAINER, REMOVABLE WITHOUT SYSTEM SHUTDOWN; NONCORROSIVE VALVE SEAT AND STEM; WITH VALVE SIZE, CAPACITY, AND OPERATING PRESSURE COMPLYING WITH ASME BOILER AND PRESSURE VESSEL CODE: SECTION IV, AND SELECTED TO SUIT SYSTEM IN WHICH INSTALLED, WITH OPERATING PRESSURE AND CAPACITY FACTORY SET AND FIELD ADJUSTABLE.
6. MANUAL AIR VENTS SHALL HAVE BRONZE BODY; NONFERROUS INTERNAL PARTS; SCREWDRIVER OR THUMBSCREW OPERATOR; NPS 1/2 (DN 15) INLET CONNECTION; NPS 1/8 (DN 6) DISCHARGE CONNECTION; MINIMUM 150 PSIG (1035 KPA) CWP RATING; AND MAXIMUM 225°F (107°C) OPERATING TEMPERATURE.
7. Y-PATTERN STRAINERS SHALL HAVE ASTM A 126, CLASS B, CAST IRON BODY WITH BOLTED COVER AND BOTTOM DRAIN CONNECTION; THREADED ENDS FOR NPS 2 (DN 50) AND SMALLER, FLANGED ENDS FOR NPS 2-1/2 (DN 65) AND LARGER; 40-MESH STARTUP STRAINER, AND PERFORATED STAINLESS-STEEL BASKET WITH 50 PERCENT FREE AREA; AND MINIMUM 125 PSIG (860 KPA) CWP RATING. PROVIDE REPLACEMENT STRAINERS AFTER SYSTEM FLUSHING.
8. FLEXIBLE CONNECTORS SHALL HAVE STAINLESS-STEEL BELLOWS WITH WOVEN, FLEXIBLE, BRONZE, WIRE REINFORCING PROTECTIVE JACKET; THREADED OR FLANGED END CONNECTIONS TO MATCH EQUIPMENT CONNECTED; CAPABLE OF 3/4-INCH (20-MM) MISALIGNMENT; MINIMUM 150 PSIG (1035 KPA) CWP RATING; AND MAXIMUM 250°F (121°C) OPERATING TEMPERATURE. PROVIDE FLEXIBLE CONNECTIONS AT ALL EQUIPMENT CONNECTIONS AND AS INDICATED ELSEWHERE.
9. CHILLED-WATER PIPING, ABOVEGROUND, NPS 2 (DN 50) AND SMALLER, SHALL BE ANY OF THE FOLLOWING:
   - A. TYPE L (B), DRAWN-TEMPER COPPER TUBING, WROUGHT COPPER FITTINGS, AND SOLDERED OR BRAZED JOINTS.
   - B. SCHEDULE 40 STEEL PIPE, CLASS 125, CAST-IRON FITTINGS; CAST-IRON FLANGES AND FLANGE FITTINGS; AND THREADED JOINTS.
10. CHILLED-WATER PIPING, ABOVEGROUND, NPS 2-1/2 (DN 65) AND LARGER, SHALL BE SCHEDULE 40 STEEL PIPE, WROUGHT-STEEL FITTINGS; WROUGHT-CAST OR FORGED-STEEL FLANGES AND FLANGE FITTINGS; WELDED AND FLANGED JOINTS.
11. HOT-WATER HEATING PIPING, ABOVEGROUND, NPS 2 (DN 50) AND SMALLER, SHALL BE ANY OF THE FOLLOWING:
    - A. TYPE L (B), DRAWN-TEMPER COPPER TUBING, WROUGHT-COPPER FITTINGS, AND SOLDERED OR BRAZED JOINTS.
    - B. SCHEDULE 40 STEEL PIPE, CLASS 125, CAST-IRON FITTINGS; CAST-IRON FLANGES AND FLANGE FITTINGS; AND THREADED JOINTS.
12. HOT-WATER HEATING PIPING, ABOVEGROUND, NPS 2-1/2 (DN 54) AND LARGER, SHALL BE SCHEDULE 40 STEEL PIPE, WROUGHT-STEEL FITTINGS; WROUGHT-CAST OR FORGED-STEEL FLANGES AND FLANGE FITTINGS; WELDED AND FLANGED JOINTS.
13. CONDENSATE-DRAIN PIPING SHALL BE TYPE M (C), DRAWN-TEMPER COPPER TUBING, WROUGHT-COPPER FITTINGS, AND SOLDERED JOINTS.
14. INSTALL CALIBRATED-ORIFICE, BALANCING VALVES AT EACH BRANCH CONNECTION TO RETURN MAIN.
15. INSTALL CALIBRATED-ORIFICE, BALANCING VALVES IN THE RETURN PIPE OF EACH HEATING OR COOLING TERMINAL.
16. INSTALL PIPING IN CONCEALED LOCATIONS, UNLESS OTHERWISE INDICATED AND EXCEPT IN EQUIPMENT ROOMS AND SERVICE AREAS.
17. INSTALL PIPING INDICATED TO BE EXPOSED AND PIPING IN EQUIPMENT ROOMS AND SERVICE AREAS AT RIGHT ANGLES OR PARALLEL TO BUILDING WALLS. DIAGONAL RUNS ARE PROHIBITED UNLESS SPECIFICALLY INDICATED OTHERWISE.
18. INSTALL PIPING ABOVE CEILINGS TO ALLOW SUFFICIENT SPACE FOR CEILING PANEL REMOVAL; SUFFICIENT SPACE TO PERMIT VALVE SERVICING; AT INDICATED SLOPES; AND FREE OF SAGS AND BENDS.
19. INSTALL FITTINGS FOR CHANGES IN DIRECTION AND BRANCH CONNECTIONS.
20. INSTALL PIPING TO ALLOW APPLICATION OF INSULATION.
21. SELECT SYSTEM COMPONENTS WITH PRESSURE RATING EQUAL TO OR GREATER THAN SYSTEM OPERATING PRESSURE.
22. INSTALL GROUPS OF PIPES PARALLEL TO EACH OTHER, SPACE TO PERMIT APPLYING INSULATION AND SERVICING OF VALVES.
23. INSTALL DRAINS, CONSISTING OF A TEE FITTING, NPS 3/4 (DN 20) BALL VALVE, AND SHORT NPS 3/4 (DN 20) THREADED NIPPLE WITH CAP, AT LOW POINTS IN PIPING SYSTEM MAINS AND ELSEWHERE AS REQUIRED FOR SYSTEM DRAINAGE.
24. INSTALL PIPING AT A UNIFORM GRADE OF 0.2 PERCENT UPWARD IN DIRECTION OF FLOW.
25. REDUCE PIPE SIZES USING ECCENTRIC REDUCER FITTINGS INSTALLED WITH LEVEL SIDE UP.
26. INSTALL BRANCH CONNECTIONS TO MAINS USING TEE FITTINGS IN MAIN PIPE, WITH THE BRANCH CONNECTED TO THE BOTTOM OF THE MAIN PIPE. FOR UP-FEED RISERS, CONNECT THE BRANCH TO THE TOP OF THE MAIN PIPE.
27. INSTALL VALVES AS HEREINAFTER SPECIFIED.
28. INSTALL UNIONS IN PIPING, NPS 2 (DN 50) AND SMALLER, ADJACENT TO VALVES, AT FINAL CONNECTIONS OF EQUIPMENT, AND ELSEWHERE AS INDICATED. INSTALL FLANGES IN PIPING, NPS 2-1/2 (DN 65) AND LARGER, AT FINAL CONNECTIONS OF EQUIPMENT, AND ELSEWHERE AS INDICATED.

HYDRONIC PIPING AND SPECIALTIES (CONT'D)

29. INSTALL STRAINERS ON INLET SIDE OF EACH CONTROL VALVE, PRESSURE-REDUCING VALVE, SOLENOID VALVE, IN-LINE PUMP, AND ELSEWHERE AS INDICATED. INSTALL NPS 3/4 (DN 20) NIPPLE AND BALL VALVE IN BLOWDOWN CONNECTION OF STRAINERS NPS 2 (DN 50) AND LARGER. MATCH SIZE OF STRAINER BLOWOFF CONNECTION FOR STRAINERS SMALLER THAN NPS 2 (DN 50).
30. INSTALL EXPANSION LOOPS, EXPANSION JOINTS, ANCHORS, AND PIPE ALIGNMENT GUIDES AS HEREINAFTER SPECIFIED.
31. IDENTIFY PIPE AS HEREINAFTER SPECIFIED.
32. INSTALL MANUAL AIR VENTS AT HIGH POINTS IN PIPING, AT HEAT-TRANSFER COILS, AND ELSEWHERE AS REQUIRED FOR SYSTEM AIR VENTING.
33. INSTALL IN-LINE AIR SEPARATOR IN PUMP SUCTION. INSTALL DRAIN VALVE ON AIR SEPARATORS NPS 2 (DN 50) AND LARGER.
34. INSTALL BYPASS CHEMICAL FEEDER IN EACH HYDRONIC SYSTEM WHERE INDICATED, IN UPRIGHT POSITION WITH TOP OF FUNNEL NOT MORE THAN 48 INCHES (1200 MM) ABOVE THE FLOOR. INSTALL FEEDER IN MINIMUM NPS 3/4 (DN 20) BYPASS LINE, FROM MAIN WITH FULL-SIZE, FULL-PORT, BALL VALVE IN THE MAIN BETWEEN BYPASS CONNECTIONS. INSTALL NPS 3/4 (DN 20) PIPE FROM CHEMICAL FEEDER DRAIN TO NEAREST EQUIPMENT DRAIN AND INCLUDE A FULL-SIZE, FULL-PORT, BALL VALVE.
35. PROVIDE HANGERS, SUPPORTS, AND ANCHOR DEVICES AS HEREINAFTER SPECIFIED.
36. INSTALL THE FOLLOWING PIPE ATTACHMENTS:
    - A. ADJUSTABLE STEEL CLEVIS HANGERS FOR INDIVIDUAL HORIZONTAL PIPING LESS THAN 20 FEET (6 M) LONG.
    - B. ADJUSTABLE ROLLER HANGERS AND SPRING HANGERS FOR INDIVIDUAL HORIZONTAL PIPING 20 FEET (6 M) OR LONGER.
    - C. PIPE ROLLER: MSS SP-58, TYPE 44 FOR MULTIPLE HORIZONTAL PIPING 20 FEET (6 M) OR LONGER, SUPPORTED ON A TRAPEZE.
    - D. SPRING HANGERS TO SUPPORT VERTICAL RUNS.
    - E. PROVIDE COPPER-CLAD HANGERS AND SUPPORTS FOR HANGERS AND SUPPORTS IN DIRECT CONTACT WITH COPPER PIPE.
37. CONSULT OWNER'S WATER-TREATMENT SPECIALIST FOR CLEANING REQUIREMENTS AND WATER ANALYSIS TESTING.
38. PREPARE HYDRONIC PIPING ACCORDING TO ASME B31.9 "BUILDING SERVICES PIPING" AND AS FOLLOWS:
    - A. LEAVE JOINTS, INCLUDING WELDS, UNINSULATED AND EXPOSED FOR EXAMINATION DURING TESTING.
    - B. PROVIDE TEMPORARY RESTRAINTS FOR EXPANSION JOINTS THAT CANNOT SUSTAIN REACTIONS DUE TO TEST PRESSURE. IF TEMPORARY RESTRAINTS ARE IMPRACTICAL, ISOLATE EXPANSION JOINTS FROM TESTING.
    - C. FLUSH HYDRONIC SYSTEM WITH CLEAN WATER, THEN REMOVE AND REPLACE STRAINER SCREENS.
    - D. ISOLATE EQUIPMENT FROM PIPING, IF A VALVE IS USED TO ISOLATE EQUIPMENT, ITS CLOSURE SHALL BE CAPABLE OF SEALING AGAINST TEST PRESSURE WITHOUT DAMAGE TO VALVE. INSTALL BLINDS IN FLANGED JOINTS TO ISOLATE EQUIPMENT.
    - E. INSTALL SAFETY VALVE, SET AT A PRESSURE NO MORE THAN ONE-THIRD HIGHER THAN TEST PRESSURE, TO PROTECT AGAINST DAMAGE BY EXPANDING LIQUID OR OTHER SOURCE OF OVERPRESSURE DURING TEST.
39. PERFORM THE FOLLOWING TESTS ON HYDRONIC PIPING:
    - A. USE AMBIENT TEMPERATURE WATER AS A TESTING MEDIUM UNLESS THERE IS RISK OF DAMAGE DUE TO FREEZING. ANOTHER LIQUID THAT IS SAFE FOR WORKERS AND COMPATIBLE WITH PIPING MAY BE USED.
    - B. WHILE FILLING SYSTEM, USE VENTS INSTALLED AT HIGH POINTS OF SYSTEM TO RELEASE AIR. USE DRAINS INSTALLED AT LOW POINTS FOR COMPLETE DRAINING OF TEST LIQUID.
    - C. ISOLATE EXPANSION TANKS AND DETERMINE THAT HYDRONIC SYSTEM IS FULL OF WATER.
    - D. SUBJECT PIPING SYSTEM TO HYDROSTATIC TEST PRESSURE THAT IS NOT LESS THAN 1.5 TIME THE SYSTEM'S WORKING PRESSURE. TEST PRESSURE SHALL NOT EXCEED MAXIMUM PRESSURE FOR ANY VESSEL, PUMP, VALVE, OR OTHER COMPONENT IN SYSTEM UNDER TEST. VERIFY THAT STRESS DUE TO PRESSURE AT BOTTOM OF VERTICAL RUNS DOES NOT EXCEED 90 PERCENT OF SPECIFIED MINIMUM YIELD STRENGTH OR 1.7 TIMES "SE" VALUE IN APPENDIX A IN ASME B31.9.
    - E. AFTER HYDROSTATIC TEST PRESSURE HAS BEEN APPLIED FOR AT LEAST 10 MINUTES, EXAMINE PIPING, JOINTS, AND CONNECTIONS FOR LEAKAGE. ELIMINATE LEAKS BY TIGHTENING, REPAIRING, OR REPLACING COMPONENTS, AND REPEAT HYDROSTATIC TEST UNTIL THERE ARE NO LEAKS.
    - F. PROVIDE WRITTEN REPORT OF TESTING.

STEAM & CONDENSATE PIPING

1. PROVIDE PRODUCT DATA SUBMITTALS FOR STEEL PIPE AND FITTINGS, STAINLESS STEEL PIPE AND FITTINGS, AND JOINING MATERIALS.
2. PROVIDE DELEGATED DESIGN SUBMITTAL INCLUDING DESIGN CALCULATIONS AND DETAILED FABRICATION AND ASSEMBLY OF PIPE ANCHORS, ALIGNMENT GUIDES, HANGERS, SUPPORTS, EXPANSION JOINTS AND LOOPS, AND ATTACHMENT OF SAME TO BUILDING STRUCTURE.
3. PROVIDE DELEGATED DESIGN SUBMITTAL INCLUDING LOCATION OF VALVES, SUPPORTS, PIPE ANCHORS, ALIGNMENT GUIDES, AND EXPANSION JOINTS AND LOOPS.
4. PROVIDE DELEGATED DESIGN SUBMITTAL INCLUDING LOCATIONS OF AND DETAILS FOR PIPING PENETRATIONS AND FIRE-STOPPING.
5. GENERATE COORDINATION DRAWINGS DETAILING FABRICATION AND LAYOUT OF STEAM PIPING AND SPECIALTIES. COORDINATE WORK WITH EXISTING CONDITIONS AND THE WORK OF OTHER TRADES.
6. COMPONENTS AND INSTALLATION SHALL BE CAPABLE OF WITHSTANDING 250 PSIG FOR ALL HIGH-PRESSURE STEAM PIPING AND 150 PSIG FOR ALL OTHER STEAM PIPING.
7. LOW AND MEDIUM PRESURE STEAM PIPING NPS 2 AND SMALLER SHALL BE SCHEDULE 40 GRADE B STEEL PIPE WITH CLASS 150 MALLEABLE IRON FITTINGS AND THREADED JOINTS.
8. LOW AND MEDIUM PRESSURE STEAM PIPING NPS 2-1/2 AND LARGER SHALL BE SCHEDULE 40 GRADE B STEEL PIPE WITH CLASS 150 WROUGHT-STEEL FITTINGS AND FLANGES. JOINTS SHALL BE WELDED AND FLANGED. MATING FLANGES TO VALVES SHALL MEET VALVE CLASS RATING.
9. CONDENSATE PIPING NPS 2 AND SMALLER SHALL BE SCHEDULE 80 GRADE B STEEL PIPE WITH CLASS 150 MALLEABLE IRON FITTINGS AND THREADED JOINTS.
10. CONDENSATE PIPING NPS 2-1/2 AND LARGER SHALL BE SCHEDULE 80 GRADE B STEEL PIPE WITH CLASS 150 WROUGHT-STEEL FITTINGS AND FLANGES. JOINTS SHALL BE WELDED AND FLANGED. MATING FLANGES TO VALVES SHALL MEET VALVE CLASS RATING.
11. INSTALL PIPING TO PERMIT VALVE AND EQUIPMENT SERVICING.
12. INSTALL PIPING FREE OF SAGS AND BENDS. INSTALL PIPING AT RIGHT ANGLES WITH RESPECT TO THE ROOM.
13. INSTALL DRAINS, CONSISTING OF A TEE FITTING, NPS 3/4 FULL PORT BALL VALVE, AND SHORT NPS 3/4 THREADED NIPPLE WITH CAP, AT ALL LOW POINTS IN PIPING SYSTEM MAINS AND ELSEWHERE AS REQUIRED FOR SYSTEM DRAINAGE.
14. INSTALL STEAM SUPPLY PIPING AT A MINIMUM UNIFORM GRADE OF 0.2% DOWNWARD IN THE DIRECTION OF STEAM FLOW.
15. INSTALL CONDENSATE RETURN PIPING AT A MINIMUM UNIFORM GRADE OF 0.4% DOWNWARD IN THE DIRECTION OF CONDENSATE FLOW.
16. REDUCE PIPE SIZES USING ECCENTRIC REDUCER FITTING INSTALLED WITH LEVEL SIDE DOWN.
17. INSTALL BRANCH CONNECTIONS TO MAINS USING TEE FITTINGS IN MAIN PIPE, WITH THE BRANCH CONNECTED TO THE TOP OF THE PIPE.
18. INSTALL UNIONS IN PIPING NPS 2 AND SMALLER ADJACENT TO VALVES AND AT FINAL CONNECTIONS OF EQUIPMENT.
19. INSTALL FLANGES IN PIPING NPS 2-1/2 AND LARGER AND AT FINAL CONNECTIONS OF EQUIPMENT.
20. INSTALL STRAINERS ON SUPPLY SIDE OF ALL CONTROL VALVES AND TRAPS. INSTALL NPS 3/4 NIPPLE AND FULL PORT BALL VALVE IN BLOWDOWN CONNECTION OF STRAINERS NPS 2 AND LARGER. MATCH SIZE OF STRAINER BLOWOFF CONNECTION FOR STRAINERS SMALLER THAN NPS 2.
21. INSTALL DRIP LEGS AT LOW POINTS AND NATURAL DRAINAGE POINTS AND NOT FURTHER THAN 150 FEET APART. SIZE DRIP LEGS SAME SIZE AS MAIN.
22. PERFORM HYDROSTATIC PRESSURE TEST ON ALL PIPING IN SCOPE.
23. TEST AND INSPECT FIELD WELDS PER ASME B31.9. CORRECT DEFICIENCIES AND RETEST UNTIL THE INSTALLATION PASSES.

STEAM & CONDENSATE PIPING SPECIALTIES

1. PROVIDE PRODUCT DATA SUBMITTAL FOR ALL STRAINERS, VALVES, STEAM TRAPS, AIR VENTS, VACUUM BREAKERS, AND CONNECTORS.
2. PROVIDE OPERATION AND MAINTENANCE DATA SUBMITTAL AT CLOSEOUT.
3. COMPONENTS AND INSTALLATION SHALL BE CAPABLE OF WITHSTANDING 250 PSIG FOR ALL HIGH-PRESSURE STEAM PIPING AND 150 PSIG FOR ALL OTHER STEAM PIPING.
4. Y-STRAINERS SHALL HAVE A CLASS B CAST IRON BODY WITH BOLTED COVER AND BOTTOM DRAIN CONNECTION. THEY SHALL INCLUDE THREADED ENDS FOR NPS 2" AND SMALLER, AND FLANGED ENDS FOR NPS 2-1/2" AND LARGER. STRAINERS SHALL INCLUDE A STAINLESS STEEL, 20-MESH OR PERFORATED BASKET. THEY SHALL BE RATED FOR 250 PSIG AND MANUFACTURED BY KECKLEY, METRAFLEX, WATTS, OR TITAN FLOW CONTROL.
5. BRONZE STEAM SAFETY VALVES SHALL BE ASME LABELED, WITH A FORGED COPPER ALLOY DISC AND THREADED END CONNECTIONS. THEY SHALL INCLUDE A FULLY ENCLOSED STEEL SPRING WITH ADJUSTABLE PRESSURE RANGE AND POSITIVE SHUTOFF, FACTORY SET AND SEALED. STEAM SAFETY VALVES SHALL BE 250 PRESSURE CLASS AND INCLUDE A CAST IRON DRIP-PAN ELBOW. THEY SHALL BE MANUFACTURED BY ARMSTRONG, KUNKLE, KECKLEY, SPIRAX, OR WATTS.
6. STEAM TRAPS SHALL BE SIZED PER MANUFACTURER'S INSTRUCTIONS, AT TWO TIMES CONNECTED EQUIPMENT LOAD, OR 1/2-INCH DIFFERENTIAL PRESSURE, WHICHEVER IS LARGER.
7. CAST IRON INVERTED BUCKET TRAPS SHALL BE MANUFACTURED BY ARMSTRONG, BARNES & JONES, HOFFMAN, SPIRAX, OR TUNSTALL. THEY SHALL HAVE A CAST IRON BODY AND CAP WITH THREADED END CONNECTIONS. HEAD AND SEAT SHALL BE STAINLESS STEEL. BUCKET SHALL BE STAINLESS STEEL. TRAPS SHALL INCLUDE AN INTEGRAL STAINLESS STEEL INLET STRAINER. THEY SHALL BE RATED AT 250 PSIG AND INCLUDE A STAINLESS STEEL THERMOSTATIC VENT.
8. INSTALL SHUTOFF VALVES AT BRANCH CONNECTIONS TO MAINS, AT EQUIPMENT CONNECTIONS, AND AT THE INLET AND OUTLET OF STEAM TRAPS AND CONTROL VALVES.
9. INSTALL SAFETY VALVES WHERE REQUIRED BY ASME BOILER AND PRESSURE VESSEL CODE. INSTALL DISCHARGE PIPING WITHOUT VALVES TO THE NEAREST FLOOR DRAIN. COMPLY WITH ASME BOILER AND PRESSURE VESSEL CODE SECTION VIII DIVISION I.
10. INSTALL STEAM TRAPS IN ACCESSIBLE LOCATIONS.
11. INSTALL FULL PORT BALL VALVE, STRAINER, AND UNION UPSTREAM FROM ALL TRAPS. INSTALL UNION, CHECK VALVE, AND FULL PORT BALL VALVE DOWNSTREAM FROM ALL TRAPS.

HUMIDIFIERS

1. PROVIDE PRODUCT DATA SUBMITTAL INCLUDING RATED CAPACITY AND FURNISHED ACCESSORIES.
2. BASIS OF DESIGN HUMIDIFIER IS PROVIDED AS A SECTION OF THE AIR HANDLING UNIT.
3. PROVIDE OPERATION AND MAINTENANCE DATA SUBMITTAL AT CLOSEOUT.
4. HUMIDIFIER MANIFOLD SHALL BE TYPE 304 STAINLESS STEEL EXTENDING THE FULL WIDTH OF THE AIR HANDLING UNIT CABINET.
5. STEAM SEPARATOR SHALL BE ASTM A 666, TYPE 304 STAINLESS STEEL, WITH CONTROL VALVE.
6. ACTUATOR SHALL BE ELECTRIC MODULATING WITH SPRING RETURN, NORMALLY CLOSED. ACTUATOR SHALL BE SIZED BY MANUFACTURER FOR SYSTEM CONDITIONS.
7. PROVIDE WITH Y-STRAINER AND AIRFLOW SWITCH.
8. INSTALL STAINLESS STEEL DRAIN PAN UNDER MANIFOLD. CONSTRUCTION SHALL COMPLY WITH ASHRAE 62.1. CONNECT TO CONDENSATE TRAP AND DRAINAGE PIPING.

METERS AND GAGES FOR HVAC PIPING

1. THERMOMETERS SHALL BE SOLAR DIGITAL VARI-ANGLE WITH SEPARABLE WELL BY WEISS INSTRUMENTS, INC.
2. THERMOWELLS SHALL BE PRESSURE-TIGHT, SOCKET-TYPE METAL FITTING MADE FOR INSERTION INTO PIPING AND OF TYPE, DIAMETER, AND LENGTH REQUIRED TO HOLD THERMOMETER.
3. PRESSURE GAGES SHALL BE DIRECT-MOUNTING, DIAL-TYPE COMPLYING WITH ASME B40.100; GLYCERIN-FILLED TYPE, WITH DRAWN STEEL OR CAST ALUMINUM 6-INCH (152-MM) DIAMETER CASE; BOURDON TUBE PRESSURE-ELEMENT ASSEMBLY; BRASS, NPS 1/4 (DN 8), BOTTOM-OUTLET TYPE PRESSURE CONNECTION; MECHANICAL MOVEMENT, WITH LINK TO PRESSURE ELEMENT AND CONNECTION TO POINTER; SATIN-FACED, NONREFLECTIVE ALUMINUM DIAL WITH PERMANENTLY ETCHED SCALE MARKINGS; RED METAL POINTER; GLASS WINDOW; METAL RING; 1/2% ACCURACY; 30-IN HG OF VACUUM TO 15 PSIG (30 PSIG FOR LOW-PRESSURE STEAM) OF PRESSURE VACUUM-PRESSURE RANGE; AND TWO TIMES OPERATING PRESSURE RANGE FOR FLUID UNDER PRESSURE.
4. PRESSURE-GAGE FITTINGS: VALVES TO BE NPS 1/4 (DN 8) BRASS OR STAINLESS-STEEL NEEDLE TYPE; SYPHONS TO BE NPS 1/4 (DN 8) COIL OF BRASS TUBING WITH THREADED ENDS; AND SNUBBERS TO BE ASME B40.5, NPS 1/4 (DN 9) BRASS BUSHING WITH CORROSION-RESISTANT, POROUS-METAL DISC OF MATERIAL SUITABLE FOR SYSTEM FLUID AND WORKING PRESSURE.
5. TEST PLUGS TO BE CORROSION-RESISTANT BRASS OR STAINLESS-STEEL BODY WITH CORE INSERTS AND GASKETED AND THREADED CAP, WITH EXTENDED STEM FOR UNITS TO BE INSTALLED IN INSULATED PIPING. MINIMUM TEMPERATURE AND PRESSURE RATING TO BE 500 PSIG AT 200°F (3450 KPA AT 93°D). CORE INSERT MATERIAL SHALL BE EPDM.
6. INSTALL THERMOMETERS AT INLET AND OUTLET OF EACH CHILLER CONDENSER AND EVAPORATOR, HYDRONIC COIL, AND HYDRONIC ZONE; AND SUCTION AND DISCHARGE OF EACH PUMP. THERMOMETERS INSTALLED OUTDOORS SHALL BE PROVIDED WITH WATERPROOF COVER.
7. PROVIDE THE FOLLOWING TEMPERATURE RANGES FOR THERMOMETERS:
   - A. HEATING WATER SYSTEMS: 30 TO 240°F
   - B. CHILLED WATER SYSTEMS: 0 TO 100°F
8. INSTALL PRESSURE GAGES AT INLET AND OUTLET OF EACH CHILLER CONDENSER AND EVAPORATOR; AND SUCTION AND DISCHARGE OF EACH PUMP.
9. INSTALL DIRECT-MOUNTING THERMOMETERS AND ADJUST VERTICAL AND TILTED POSITIONS.
10. INSTALL THERMOWELLS WITH SOCKET EXTENDING ONE-THIRD OF DIAMETER OF PIPE AND IN VERTICAL POSITION IN PIPING TEES WHERE THERMOMETERS ARE INDICATED.
11. INSTALL DIRECT-MOUNTING PRESSURE GAGES IN PIPING TEES WITH PRESSURE GAGE LOCATED ON PIPE AT MOST READABLE POSITION.
12. INSTALL VALVE AND SYPHON FITTING IN PIPING FOR EACH STEAM PRESSURE GAGE. INSTALL NEEDLE-VALVE AND SNUBBER FITTING IN ALL OTHER PRESSURE GAUGES.
13. INSTALL TEST PLUGS IN TEES IN PIPING AT EACH HYDRONIC BAS TEMPERATURE SENSOR; AND ENTERING AND LEAVING CONNECTIONS OF COILS, CHILLERS, AND PUMPS.
14. INSTALL METERS AND GAGES ADJACENT TO MACHINES AND EQUIPMENT TO ALLOW SERVICE AND MAINTENANCE FOR METERS, GAGES, MACHINES, AND EQUIPMENT. ADJUST FACES OF METERS AND GAGES TO PROPER ANGLE FOR BEST VISIBILITY.

This sheet of drawings has not been reviewed for code compliance.

GENERAL-DUTY VALVES FOR HVAC PIPING

1. ACCEPTABLE MANUFACTURERS: KITZ, NIBCO, CRANE, GRINNELL, KENNEDY, MILWAUKEE, CENTERLINE, KEYSTONE, HAMMOND, APOLLO, OR WATTS.
2. BRONZE VALVES SHALL BE MADE WITH DEZINCIFICATION-RESISTANT MATERIALS. BRONZE VALVES MADE WITH COPPER ALLOY (BRASS) CONTAINING MORE THAN 15% ZINE NOT PERMITTED.
3. USE BRONZE VALVES ON NPS 2 (DN 50) AND SMALLER WITH THREADED ENDS, UNLESS OTHERWISE INDICATED.
4. USE FERROUS VALVES ON NPS 2-1/2 (DN 65) AND LARGER WITH FLANGED ENDS, UNLESS OTHERWISE INDICATED.
5. VALVE PRESSURE AND TEMPERATURE RATINGS SHALL NOT BE LESS THAN INDICATED AND AS REQUIRED FOR SYSTEM PRESSURES AND TEMPERATURES.
6. VALVE OPERATORS SHALL BE CHAINWHEEL ON VALVES NPS 4 (DN 100) AND LARGER AND MORE THAN 95 INCHES (2400 MM) ABOVE FLOOR WITH CHAINS EXTENDED TO 60 INCHES (1520 MM) ABOVE FINISHED FLOOR; GEAR DRIVE FOR QUARTER-TURN VALVES NPS 8 (DN 200) AND LARGER; HANDWHEEL FOR VALVES OTHER THAN QUARTER-TURN TYPES; LEVER HANDLE FOR QUARTER-TURN VALVES NPS 6 (DN 150) AND SMALLER, EXCEPT PLUG VALVES; AND WRENCH FOR PLUG VALVES WITH SQUARE HEADS.
7. PROVIDE EXTENDED VALVE STEMS ON INSULATED VALVES, EXTENDED OPERATING HANDLES ON INSULATED BALL VALVES, AND EXTENDED NECKS ON INSULATED BUTTERFLY VALVES.
8. VALVE FLANGES SHALL BE ASME B16.1 FOR CAST-IRON VALVES, ASME B16.5 FOR STEEL VALVES, AND ASME B16.24 FOR BRONZE VALVES.
9. CONNECTIONS TO VALVES AND FITTINGS FOR DRAIN AND BYPASS TO COMPLY WITH MSS SP-45.
10. FOR LOW-PRESSURE STEAM APPLICATIONS, PROVIDE TWO-PIECE BRONZE VALVES WITH FULL PORT, STAINLESS STEEL TRIM, AND THREADED CONNECTIONS.
11. COPPER-ALLOY BALL VALVES SHALL BE TWO-PIECE; BRASS OR BRONZE BODY WITH FULL PORT; CHROME-PLATED BRONZE BALL; TFE SEATS; AND 600-PSIG (4140-KPA) MINIMUM CWP RATING AND BLOWOUT-PROOF STEM.
12. FERROUS-ALLOY BALL VALVES SHALL BE CLASS 150, FULL PORT, WITH FLANGED ENDS; AND COMPLY WITH MSS SP-72.
13. FERROUS-ALLOY BUTTERFLY VALVES SHALL BE 150-PSIG (1035-KPA) CWP RATING, FLANGED-END TYPE WITH TWO-PIECE STEM; AND COMPLY WITH MSS SP-67, TYPE I, FOR TIGHT SHUTOFF.
14. BRONZE SWING CHECK VALVES SHALL BE TYPE IV, CLASS 125, WITH NONMETALLIC DISC AND BRONZE SEAT; AND COMPLY WITH MSS SP-80.
15. GRAY-IRON SWING CHECK VALVES SHALL BE TYPE II, CLASS 125, SWING CHECK WITH COMPOSITION TO METAL SEATS; AND COMPLY WITH MSS SP-71.
16. FERROUS-ALLOY WAFER CHECK VALVES SHALL BE DUAL-PLATE, CLASS 125 WITH DOUBLE-FLANGED-END BODY; AND COMPLY WITH API 594.
17. BRONZE GLOBE VALVES SHALL BE TYPE 2, CLASS 125; BRONZE BODY WITH NONMETALLIC TFE DISC AND UNION-RING BONNET; AND COMPLY WITH MSS SP-80 WITH FERROUS-ALLOY HANDWHEEL.
18. CAST-IRON GLOBE VALVES SHALL BE TYPE I, CLASS 125; GRAY-IRON BODY WITH BRONZE SEATS; AND COMPLY WITH MSS SP-85.
19. CHAINWHEEL OPERATORS SHALL BE VALVE ACTUATION ASSEMBLY WITH SPROCKET RIM, BRACKETS, AND CHAIN. SPROCKET RIM WITH CHAIN GUIDES SHALL BE DUCTILE IRON, OF TYPE AND SIZE REQUIRED FOR VALVE. BRACKETS SHALL BE OF TYPE, NUMBER, SIZE, AND FASTENERS REQUIRED TO MOUNT ACTUATOR ON VALVE. CHAIN SHALL BE HOT-DIP, GALVANIZED STEEL, OF SIZE REQUIRED TO FIT SPROCKET RIM.
20. SHUTOFF DUTY VALVES NPS 2 (DN 50) AND SMALLER SHALL BE BALL; NPS 2-1/2 (DN 65) AND LARGER SHALL BE BUTTERFLY.
21. THROTTLING DUTY VALVES NPS 2 (DN 50) AND SMALLER SHALL BE GLOBE; NPS 2-1/2 (DN 65) AND LARGER SHALL BE GLOBE OR BUTTERFLY.
22. CHILLED WATER SYSTEMS:
    - A. BALL VALVES TO BE CLASS 150, 600-PSI (4140-KPA) CWP, WITH STEM EXTENSION AND MEMORY STOP
    - B. GLOBE VALVES TO BE CLASS 125, BRONZE BODY WITH TEFLON DISC; OR CLASS 125, CAST-IRON BODY
    - C. BUTTERFLY VALVES TO BE NICKEL-PLATED DUCTILE IRON, ALUMINUM BRONZE, OR ELASTOMER-COATED DUCTILE IRON DISC; EPDM SLEEVE AND STEMS
    - D. CHECK VALVES TO BE CLASS 125, BRONZE BODY SWING CHECK WITH RUBBER SEAT; CLASS 125, CAST-IRON BODY SWING CHECK; OR CLASS 125, CAST-IRON BODY WAFER CHECK
23. HEATING WATER SYSTEMS:
    - A. BALL VALVES TO BE CLASS 150, 600-PSI (4140-KPA) CWP, WITH STEM EXTENSION AND MEMORY STOP.
    - B. GLOBE VALVES TO BE CLASS 150, BRONZE OR CAST-IRON BODY TO SUIT PIPING APPLICATION, AND BRONZE DISC.
    - C. BUTTERFLY VALVES TO BE NICKEL-PLATED DUCTILE IRON, ALUMINUM BRONZE, OR EPOXY-COATED DUCTILE IRON DISC; EPDM OR BUNA-N SLEEVE AND STEM SEALS.
    - D. CHECK VALVES TO BE CLASS 150 WITH BRONZE SEAT RING; IRON SWING, WAFER, OR LIFT TYPE AS INDICATED.
24. EXAMINE VALVES FOR PROPER FUNCTION, CLEANLINESS, AND CONDITIONS THAT MAY CAUSE LEAKAGE. DO NOT ATTEMPT TO REPAIR DEFECTIVE VALVES; REPLACE WITH NEW VALVES. REPLACE VALVES IF PERSISTENT LEAKING OCCURS.
25. INSTALL SHUTOFF-DUTY VALVES AT EACH BRANCH CONNECTION TO SUPPLY MAINS, AND AT SUPPLY CONNECTION TO EACH PIECE OF EQUIPMENT.
26. INSTALL DRAIN VALVES AT LOW POINTS IN MAINS, RISERS, BRANCH LINES, AND ELSEWHERE AS REQUIRED FOR SYSTEM DRAINAGE.
27. INSTALL CHECK VALVES ON EACH PUMP DISCHARGE AND ELSEWHERE AS REQUIRED TO CONTROL FLOW DIRECTION.
28. INSTALL VALVES WITH UNIONS OR FLANGES AT EACH PIECE OF EQUIPMENT ARRANGED TO ALLOW SERVICE, MAINTENANCE, AND EQUIPMENT REMOVAL WITHOUT SYSTEM SHUTDOWN.
29. LOCATE VALVES FOR EASY ACCESS AND PROVIDE SEPARATE SUPPORT WHERE NECESSARY.
30. INSTALL VALVES IN HORIZONTAL PIPING WITH STEM AT OR ABOVE CENTER OF PIPE.
31. INSTALL VALVES IN POSITION TO ALLOW FULL STEM MOVEMENT.
32. INSTALL CHECK VALVES FOR PROPER DIRECTION OF FLOW AND AS FOLLOWS: SWING CHECK VALVES IN HORIZONTAL POSITION WITH HINGE PIN LEVEL; DUAL-PLATE WAFER CHECK VALVES IN HORIZONTAL OR VERTICAL POSITION, BETWEEN FLANGES.

HANGERS AND SUPPORTS FOR HVAC PIPING AND EQUIPMENT

1. STEEL PIPE HANGERS AND SUPPORTS SHALL BE MSS SP-58, TYPES 1 THROUGH 58, FACTORY-FABRICATED COMPONENTS; PRE-GALVANIZED OR HOT DIPPED METALLIC COATINGS; PLASTIC COATING, JACKET, OR LINER NONMETALLIC COATINGS; HANGER WITH FELT OR OTHER PIPE INSULATION PAD OR CUSHION FOR SUPPORT OF BEARING SURFACE OF PIPING.
2. TRAPEZE PIPE HANGERS SHALL BE MSS SP-69, TYPE 59, SHOP- OR FIELD-FABRICATED PIPE-SUPPORT ASSEMBLY MADE FROM STRUCTURAL-STEEL SHAPES WITH MSS SP-58 HANGER RODS, NUTS, SADDLES, AND U-BOLTS.
3. THERMAL-HANGER SHIELD INSERTS SHALL BE 100-PSIG (690-KPA) MINIMUM, COMPRESSIVE-STRENGTH INSULATION INSERT ENCASED IN SHEET METAL SHIELD. INSULATION-INSERT MATERIAL FOR COLD PIPING SHALL BE WATER-REPELLANT TREATED, ASTM C 522, TYPE II CELLULAR GLASS WITH VAPOR BARRIER. FOR TRAPEZE OR CLAMPED SYSTEMS THE INSERT AND SHIELD SHALL COVER ENTIRE CIRCUMFERENCE OF PIPE. FOR CLEVIS OR BAND HANGERS THE INSERT AND SHIELD SHALL COVER LOWER 180 DEGREES OF PIPE. INSERT LENGTH SHALL EXTEND 2 INCHES (50 MM) BEYOND SHEET METAL SHIELD FOR PIPING OPERATING BELOW AMBIENT AIR TEMPERATURE.
4. POWDER-ACTUATED FASTENERS SHALL BE THREADED-STEEL STUD, FOR USE IN HARDENED PORTLAND CEMENT CONCRETE WITH PULL-OUT, TENSION, AND SHEAR CAPACITIES APPROPRIATE FOR SUPPORTED LOADS AND BUILDING MATERIALS USED.
5. MECHANICAL-EXPANSION ANCHORS SHALL BE INSERT-WEDGE-TYPE STAINLESS STEEL, FOR USE IN HARDENED PORTLAND CEMENT CONCRETE WITH PULL-OUT, TENSION, AND SHEAR CAPACITIES APPROPRIATE FOR SUPPORTED LOADS AND BUILDING MATERIALS WHERE USED.
6. COMPLY WITH MSS SP-69 FOR PIPE HANGER SELECTIONS AND APPLICATIONS THAT ARE NOT SPECIFIED.
7. USE HANGERS AND SUPPORTS WITH GALVANIZED, METALLIC COATINGS FOR PIPING AND EQUIPMENT THAT WILL NOT HAVE FIELD-APPLIED FINISH.
8. USE NONMETALLIC COATINGS ON ATTACHMENTS FOR ELECTROLYTIC PROTECTION WHERE ATTACHMENTS ARE IN DIRECT CONTACT WITH COPPER TUBING.
9. USE PADDED HANGERS FOR PIPING THAT IS SUBJECT TO SCRATCHING.

IDENTIFICATION FOR HVAC PIPING & EQUIPMENT

1. PLASTIC LABELS FOR EQUIPMENT
   - A. MATERIAL AND THICKNESS: MULTILAYER, MULTICOLOR, PLASTIC LABELS FOR MECHANICAL ENGRAVING, 1/8 INCH (3.2 MM) THICK, AND HAVING PREDRILLED HOLES FOR ATTACHMENT HARDWARE.
   - B. LETTER COLOR: BLACK
   - C. BACKGROUND COLOR: WHITE
   - D. MAXIMUM TEMPERATURE: ABLE TO WITHSTAND TEMPERATURES UP TO 160°F (71°C)
   - E. MAXIMUM LABEL SIZE: LENGTH AND WIDTH VARY FOR REQUIRED LABEL CONTENT, BUT NOT LESS THAN 2-1/2 BY 3/4 INCH (64 BY 19 MM)
   - F. MINIMUM LETTER SIZE: 1/2 INCH (13 MM).
   - G. FASTENERS: STAINLESS-STEEL RIVETS OR SELF-TAPPING SCREWS.
   - H. ADHESIVE: CONTACT-TYPE PERMANENT ADHESIVE, COMPATIBLE WITH LABEL AND SUBSTRATE.
   - I. LABEL CONTENT: INCLUDE EQUIPMENT'S DRAWING DESIGNATION OR UNIQUE EQUIPMENT NUMBER. COORDINATE FINAL DESIGNATION AND EQUIPMENT NUMBER WITH FACILITY.
2. WARNING SIGNS AND LABELS
   - A. MATERIAL AND THICKNESS: MULTILAYER, MULTICOLOR, PLASTIC LABELS FOR MECHANICAL ENGRAVING, 1/8 INCH (3.2 MM) THICK, AND HAVING PREDRILLED HOLES FOR ATTACHMENT HARDWARE.
   - B. LETTER COLOR: BLACK
   - C. BACKGROUND COLOR: YELLOW OR ORANGE, AS INDICATED.
   - D. MAXIMUM TEMPERATURE: ABLE TO WITHSTAND TEMPERATURES UP TO 160°F (71°C).
   - E. MINIMUM LABEL SIZE: LENGTH AND WIDTH VARY FOR REQUIRED LABEL CONTENT, BUT NOT LESS THAN 2-1/2 BY 3/4 INCH (64 BY 19 MM).
   - F. MINIMUM LETTER SIZE: 1/2 INCH (13 MM). INCLUDE SECONDARY LETTERING TWO-THIRDS TO THREE-FOURTHS THE SIZE OF PRINCIPAL LETTERING.
   - G. FASTENERS: STAINLESS-STEEL RIVETS OR SELF-TAPPING SCREWS.
   - H. ADHESIVE: CONTACT-TYPE PERMANENT ADHESIVE, COMPATIBLE WITH LABEL AND WITH SUBSTRATE.
   - I. LABEL CONTENT: REFER TO DRAWINGS.
3. PIPE LABELS
   - A. GENERAL REQUIREMENTS FOR MANUFACTURED PIPE LABELS: PREPRINTED, COLOR-CODED, WITH LETTERING INDICATING SERVICE, AND SHOWING FLOW DIRECTION.
   - B. SELF-ADHESIVE PIPE LABELS: PRINTED PLASTIC WITH CONTACT-TYPE, PERMANENT-ADHESIVE BACKING.
   - C. PIPE LABEL CONTENTS: INCLUDE IDENTIFICATION OF PIPING SERVICE USING SAME DESIGNATIONS OR ABBREVIATIONS AS USED ON DRAWINGS, PIPE SIZE, AND AN ARROW INDICATING FLOW DIRECTION.
   - D. FLOW-DIRECTION ARROWS: INTEGRAL WITH PIPING SYSTEM SERVICE LETTERING TO ACCOMMODATE BOTH DIRECTIONS, OR AS SEPARATE UNIT ON EACH PIPE LABEL TO INDICATE FLOW DIRECTION.
   - E. LETTERING SIZE: AT LEAST 1-1/2 INCHES (38 MM) HIGH.
4. DUCT LABELS
   - A. MATERIALS AND THICKNESS: MULTILAYER, MULTICOLOR, PLASTIC LABELS FOR MECHANICAL ENGRAVING, 1/8 INCH (3.2 MM) THICK, AND HAVING PREDRILLED HOLES FOR ATTACHMENT HARDWARE.
   - B. LETTER COLOR: BLACK
   - C. BACKGROUND COLOR: WHITE
   - D. MAXIMUM TEMPERATURE: ABLE TO WITHSTAND TEMPERATURES UP TO 160°F (71°C)
   - E. FASTENERS: STAINLESS-STEEL RIVETS OR SELF-TAPPING SCREWS.
   - F. ADHESIVE: CONTACT-TYPE PERMANENT ADHESIVE, COMPATIBLE WITH LABEL AND SUBSTRATE.
   - G. LABEL CONTENTS: INCLUDE IDENTIFICATION OF DUCT SERVICE USING SAME DESIGNATIONS OR ABBREVIATIONS AS USED ON DRAWINGS, DUCT SIZE, AND AN ARROW INDICATING FLOW DIRECTION.
   - H. FLOW-DIRECTION ARROWS: INTEGRAL WITH DUCT SYSTEM SERVICE LETTERING TO ACCOMMODATE BOTH DIRECTIONS, OR AS SEPARATE UNIT ON EACH DUCT LABEL TO INDICATE FLOW DIRECTION.
   - I. LETTERING SIZE: AT LEAST 1-1/2 INCHES (38 MM) HIGH.
5. VALVE TAGS
   - A. STAMPED OR ENGRAVED WITH 1/4 INCH (6.4 MM) LETTERS FOR PIPING SYSTEM ABBREVIATION AND 1/2 INCH (13 MM) NUMBERS.
   - B. TAG MATERIAL: BRASS, 0.032 INCH (0.8 MM) MINIMUM THICKNESS, AND HAVING PREDRILLED OR STAMPED HOLES FOR ATTACHMENT HARDWARE.
   - C. FASTENERS: BRASS WIRE-LINK OR BEADED CHAIN.
   - D. VALVE SCHEDULES: FOR EACH PIPING SYSTEM, ON 8-1/2 BY 11 INCH (A4) BOND PAPER. TABULATE VALVE NUMBER, PIPING SYSTEM, SYSTEM ABBREVIATION (AS SHOWN ON VALVE TAG), LOCATION OF VALVE (ROOM OR SPACE), NORMAL-OPERATING POSITION (OPEN, CLOSED, OR MODULATING), AND VARIATIONS FOR IDENTIFICATION. MARK VALVES FOR EMERGENCY SHUTOFF AND SIMILAR SPECIAL USES.
6. PREPARATION
   - A. CLEAN PIPING AND EQUIPMENT SURFACES OR SUBSTANCES THAT COULD IMPAIR BOND OF IDENTIFICATION DEVICES, INCLUDING DIRT, OIL, GREASE, RELEASE AGENTS, AND INCOMPATIBLE PRIMERS, PAINTS, AND ENCAPSULANTS.
7. EQUIPMENT LABEL INSTALLATION
   - A. INSTALL OR PERMANENTLY FASTEN LABELS ON EACH MAJOR ITEM OF MECHANICAL EQUIPMENT.
   - B. LOCATE EQUIPMENT LABELS WHERE ACCESSIBLE AND VISIBLE.
8. PIPE LABEL INSTALLATION
   - A. PIPING COLOR-CODING:
     - a. CHILLED WATER SUPPLY: WHILE LETTERS, GREEN BACKGROUND
     - b. CHILLED WATER RETURN: WHILE LETTERS, GREEN BACKGROUND
     - c. HEATING WATER SUPPLY: WHILE LETTERS, GREEN BACKGROUND
     - d. HEATING WATER RETURN: WHILE LETTERS, GREEN BACKGROUND
     - e. LOW PRESSURE STEAM: BLACK LETTERS, YELLOW BACKGROUND
     - f. DRAIN: BLACK LETTERING, YELLOW BACKGROUND
   - B. LOCATE PIPE LABELS WHERE PIPING IS EXPOSED AS FOLLOWS: NEAR EACH VALVE; NEAR EACH BRANCH CONNECTION, EXCLUDING SHORT TAKEOFFS FOR FIXTURES AND TERMINAL UNITS; WHERE FLOW PATTERN IS NOT OBVIOUS, MARK EACH PIPE AT BRANCH; NEAR PENETRATIONS THROUGH WALLS, FLOOR, CEILINGS, AND INACCESSIBLE ENCLOSURES; NEAR MAJOR EQUIPMENT ITEMS AND OTHER POINTS OF ORIGINATION AND TERMINATION; SPACED AT MAXIMUM INTERVALS OF 25 FEET (7.6 M) ALONG EACH RUN.
   - C. PIPE LABEL BACKGROUND COLOR: GREEN
   - D. PIPE LABEL LETTER COLOR: WHITE
9. DUCT LABEL INSTALLATION
   - A. INSTALL DUCT LABELS WITH PERMANENT ADHESIVE ON AIR DUCTS IN THE FOLLOWING COLOR CODES: BLUE FOR COLD-AIR SUPPLY DUCTS; YELLOW FOR HOT-AIR SUPPLY DUCTS; GREEN FOR EXHAUST-, OUTSIDE-, RELIEF-, AND MIXED-AIR DUCTS. REFER TO ASME A13.1 COLORS AND DESIGNS FOR HAZARDOUS MATERIAL EXHAUST.
   - B. LOCATE LABELS NEAR POINTS WHERE DUCTS ENTER INTO CONCEALED SPACES AND AT MAXIMUM INTERVALS OF 25 FEET (7.6 M) ALONG EACH RUN.
10. VALVE-TAG INSTALLATION
    - A. INSTALL TAGS ON VALVES AND CONTROL DEVICES IN PIPING SYSTEM, EXCEPT CHECK VALVES.
    - B. VALVE-TAG SIZE AND SHAPE: 1-1/2 INCH (38 MM), ROUND.
    - C. VALVE-TAG COLOR: NATURAL.
    - D. LETTER COLOR: BLACK.

Salas O'Brien
salasobrien.com
Greenwood Village
9250 East Costilla Avenue, Suite 220
Greenwood Village, CO 80112
Registration:

CONFIDENTIAL
THIS DRAWING AND ASSOCIATED DESIGN ELEMENTS ARE CONFIDENTIAL AND THE PROPERTY OF SALAS O'BRIEN, WHICH RETAINS ALL COMMON LAW, COPYRIGHT, STATUTORY AND OTHER RIGHTS THERETO. ANY UNAUTHORIZED USE, REUSE OR REPRODUCTION IS PROHIBITED. UNLESS OTHERWISE AGREED TO BY SALAS O'BRIEN, THIS DRAWING (AS WELL AS ANY COPIES) SHALL BE RETURNED TO SALAS O'BRIEN UPON REQUEST.

PROFESSIONAL SEAL
COLORADO LICENSED MICHAEL P THOMPSON 53150 PROFESSIONAL ENGINEER

ISSUE DATE	DESCRIPTION
10/31/2025	PERMIT

2561-22631-00
THE MEDICAL CENTER OF AURORA

IR AHU-15 Replacement

1501 S. Potomac St,
Aurora, CO 80012

REVISIONS

Δ	DESCRIPTION	DATE

CHECKED BY	DRAWN BY
BH	XW, ZP

SHEET NAME
MECHANICAL SPECIFICATIONS

SHEET NUMBER	REVISION
M007	

Autodesk Docs://061_2561-22631-00_TMCA IR AHU-15_ME_R25/SO_2561-22631-00_TMCA IR AHU-15_ME_R25.rvt
10/31/2025 12:58:52 PM

MECHANICAL SPECIFICATIONS

HANGERS AND SUPPORTS FOR HVAC PIPING AND EQUIPMENT

1. ADJUSTABLE, STEEL CLEVIS HANGERS (MSS TYPE 1) SHALL BE USED FOR SUSPENSION OF NON-INSULATED OR INSULATED STATIONARY PIPES, NPS 1/2 TO 30 (DN 15 TO 750).
2. U-BOLTS (MSS TYPE 24) SHALL BE USED FOR SUPPORT OF HEAVY PIPES, NPS 1/2 TO NPS 30 (DN 15 TO 750).
3. PIPE SADDLE SUPPORTS (MSS TYPE 36) SHALL BE USED FOR SUPPORT OF PIPES, NPS 4 TO 36 (DN 100 TO 900), WITH STEEL PIPE BASE STANCHION SUPPORT AND CAST-IRON FLOOR FLANGE. ADJUSTABLE, PIPE SADDLE SUPPORTS (MSS TYPE 38) MAY BE USED IF VERTICAL ADJUSTMENT IS REQUIRED.
4. ADJUSTABLE ROLLER HANGERS (MSS TYPE 43) SHALL BE USED FOR SUSPENSION OF PIPES, NPS 2-1/2 TO 20 (DN 65 TO 500), FROM SINGLE ROD IF HORIZONTAL MOVEMENT CAUSED BY EXPANSION AND CONTRACTION MIGHT OCCUR.
5. EXTENSION PIPE OR RISER CLAMPS (MSS TYPE 8) SHALL BE USED FOR SUPPORT OF PIPE RISERS, NPS 3/4 TO 20 (DN 20 TO 500).
6. STEEL TURNBUCKLES (MSS TYPE 13) SHALL BE USED FOR ADJUSTMENT UP TO 6 INCHES (150 MM) FOR HEAVY LOADS.
7. MALLEABLE-IRON SOCKETS (MSS TYPE 16) SHALL BE USED FOR ATTACHING HANGER RODS TO VARIOUS TYPES OF BUILDING ATTACHMENTS.
8. STEEL OR MALLEABLE CONCRETE INSERTS (MSS TYPE 18) SHALL BE USED FOR UPPER ATTACHMENT TO SUSPEND PIPE HANGERS FROM CONCRETE CEILING.
9. CENTER-BEAM CLAMPS (MSS TYPE 21) SHALL BE USED FOR ATTACHING TO CENTER OF BOTTOM FLANGE OF BEAMS.
10. STEEL PIPE-COVERING PROTECTION SADDLES (MSS TYPE 39) SHALL BE USED TO FILL INTERIOR VOIDS WITH INSULATION THAT MATCHES ADJOINING INSULATION.
11. PROTECTION SHIELDS (MSS TYPE 40) SHALL BE USED OF LENGTH RECOMMENDED IN WRITING BY MANUFACTURER TO PREVENT CRUSHING INSULATION.
12. THERMAL-HANGER SHIELD INSERTS SHALL BE USED FOR SUPPORTING INSULATED PIPE.
13. USE POWDER-ACTUATED FASTENERS OR MECHANICAL-EXPANSION ANCHORS INSTEAD OF BUILDING ATTACHMENTS WHERE REQUIRED IN CONCRETE CONSTRUCTION.
14. INSTALL PIPE HANGERS AND SUPPORTS IN COMPLIANCE WITH MSS SP-69 AND MSS SP-89.
15. INSTALL THERMAL-HANGER SHIELD IN PIPE HANGER FOR INSULATED PIPING.
16. INSTALL POWER-ACTUATED FASTENERS FOR USE IN LIGHTWEIGHT CONCRETE OR CONCRETE SLABS LESS THAN 4 INCHES (100 MM) THICK.
17. INSTALL MECHANICAL-EXPANSION ANCHORS IN HEAVYWEIGHT CONCRETE OR CONCRETE 4 INCHES (100 MM) THICK OR GREATER.
18. INSTALL HANGERS AND SUPPORTS COMPLETE WITH NECESSARY INSERTS, BOLTS, RODS, NUTS, WASHERS, AND OTHER ACCESSORIES.
19. INSTALL BUILDING ATTACHMENTS WITHIN CONCRETE OR ATTACH TO STRUCTURAL STEEL. INSTALL ADDITIONAL ATTACHMENTS AT CONCENTRATED LOADS, INCLUDING VALVES, FLANGES,AND STRAINERS NPS 2-1/2 (DN 65) AND LARGER; AND AT CHANGES IN DIRECTION OF PIPING.
20. INSTALL HANGERS AND SUPPORTS SO PIPING LIVE AND DEAD LOADS AND STRESSES FROM MOVEMENT WILL NOT BE TRANSMITTED TO CONNECTED EQUIPMENT.
21. INSTALL HANGERS AND SUPPORTS TO PROVIDE INDICATED PIPE SLOPES AND SO MAXIMUM PIPE DEFLECTIONS ALLOWED BY ASME B31.1 (FOR POWER PIPING) AND ASME B31.9 (FOR BUILDING SERVICES PIPING) ARE NOT EXCEEDED.
22. CLAMPS MAY PROJECT THROUGH INSULATION FOR PIPING OPERATING ABOVE AMBIENT AIR TEMPERATURE.
23. USE THERMAL-HANGER SHIELD INSERT WITH CLAMP SIZED TO MATCH O.D. OF INSERT FOR PIPING OPERATING BELOW AMBIENT AIR TEMPERATURE.
24. INSTALL MSS SP-58, TYPE 39, PROTECTION SADDLES IF INSULATION WITHOUT VAPOR BARRIER IS INDICATED. FILL INTERIOR VOIDS WITH INSULATION THAT MATCHES ADJOINING INSULATION. THERMAL-HANGER SHIELD INSERTS MAY BE USED. INCLUDE STEEL WEIGHT-DISTRIBUTION PLATE FOR PIPE NPS 4 (DN 100) AND LARGER IF PIPE IS INSTALLED ON ROLLERS.
25. INSTALL MSS SP-58, TYPE 40, PROTECTION SHIELDS ON COLD PIPING WITH VAPOR BARRIER. SHIELDS SHALL SPAN AN ARC OF 180 DEGREES. THERMAL-HANGER SHIELD INSERTS MAY BE USED. INCLUDE STEEL WEIGHT-DISTRIBUTION PLATE FOR PIPE NPS 4 (DN 100) AND LARGER IF PIPE IS INSTALLED ON ROLLERS.
26. SHIELD DIMENSIONS FOR PIPE SHALL NOT BE LESS THAN 12 INCHES (305 MM) LONG AND 0.048 INCH (1.22 MM) THICK FOR NPS 1/4 TO 3-1/2 (DN 8 TO 90); 12 INCHES (305 MM) LONG AND 0.06 INCH (1.52 MM) THICK FOR NPS 4 (DN 100); 18 INCHES (457 MM) LONG AND 0.06 INCH (1.52 MM) THICK FOR NPS 5 TO 6 (DN 125 TO 150); AND 24 INCHES (610 MM) LONG AND 0.075 INCH (1.91 MM) THICK FOR NPS 8 TO 14 (DN 200 TO 350).
27. INSERT MATERIAL SHALL BE AT LEAST AS LONG AS PROTECTIVE SHIELD.
28. INSTALL HANGERS FOR STEEL AND COPPER PIPING WITH THE FOLLOWING MAXIMUM SPACING AND MINIMUM ROD SIZES:

MAXIMUM HANGER SPACING AND MINIMUM ROD SIZE

	NPS	IN.	3/4	1	1 1/2	2	2 1/2	3	4	5	8	10	12	14	16	18	20
HANGER SPACING (FT.)	STEEL PIPE	WATER	7	7	9	10	11	12	14	17	19	20	23	25	27	28	30
		STEAM	9	9	12	13	14	15	17	21	24	26	30	32	35	37	39
	COPPER TUBE	WATER	5	6	8	8	9	10	12	14	16	18	19	-	-	-	-
	ROD SIZE	IN.	1/4	1/4	3/8	3/8	3/8	3/8	1/2	1/2	5/8	3/4	7/8	1	1	1 1/4	1 1/4

INSULATION FOR HVAC DUCTWORK, EQUIPMENT, AND PIPING

1. ALL INSULATION INSTALLED INDOORS SHALL HAVE A FLAME-SPREAD INDEX OF 25 OR LESS, AND SMOKE-DEVELOPED INDEX OF 50 OR LESS.
2. COORDINATE SIZE AND LOCATION OF SUPPORTS, HANGERS, AND INSULATION SHIELDS.
3. COORDINATE INSTALLATION AND TESTING OF HEAT TRACING.
4. SCHEDULE INSULATION APPLICATION AFTER PRESSURE TESTING AND, WHERE REQUIRED, AFTER INSTALLING AND TESTING HEAT TRACING.
5. PRODUCTS SHALL NOT CONTAIN ASBESTOS, LEAD, MERCURY, OR MERCURY COMPOUNDS.
6. PRODUCTS THAT MAY COME IN CONTACT WITH STAINLESS STEEL SHALL HAVE A LEACHABLE CHLORIDE CONTENT OF LESS THAN 50 PPM WHEN TESTED ACCORDING TO ASTM C 871.
7. FOAM INSULATION MATERIALS SHALL NOT USE CFC OR HCFC BLOWING AGENTS IN THE MANUFACTURING PROCESS.
8. USE OF CALCIUM SILICATE INSULATION IS UNACCEPTABLE.
9. STEAM AND CONDENSATE PIPING SHALL BE INSULATED WITH TYPE I MINERAL FIBER PREFORMED PIPE INSULATION WITH A MINIMUM R VALUE OF 5.0.
10. CELLULAR GLASS INSULATION SHALL BE INORGANIC, INCOMBUSTIBLE, FOAMED OR CELLULATED GLASS WITH ANNEALED, RIGID, HERMETICALLY SEALED CELLS. FACTORY-APPLIED JACKET NOT TO BE USED ON FOAM GLASS. PERFORMED PIPE INSULATION WITHOUT JACKET TO COMPLY WITH ASTM C 552, TYPE II, CLASS 1.
11. FLEXIBLE ELASTOMERIC INSULATION SHALL BE CLOSED-CELL MATERIAL. COMPLY WITH ASTM C 534, TYPE 1 FOR TUBULAR MATERIALS.
12. MINERAL-FIBER BLANKET INSULATION SHALL BE MINERAL OR GLASS FIBER BONDED WITH A THERMOSETTING RESIN COMPLYING WITH ASTM C 553, TYPE II AND ASTM C 1290, TYPE III WITH FACTORY-APPLIED FSK JACKET. STAPLES AND PINS TO BE SEALED WITH MASTIC, NOT SELF-SEALED TAPE.
13. MINERAL-FIBER, PERFORMED PIPE INSULATION SHALL BE TYPE 1, 850°F (454°C), MINERAL OR GLASS FIBERS BONDED WITH A THERMOSETTING RESIN. COMPLY WITH ASTM C 547, TYPE 1, GRADE A, WITH FACTORY-APPLIED FSK.
14. PHENOLIC INSULATION SHALL BE PERFORMED PIPE INSULATION OF RIGID, EXPANDED, CLOSED-CELL STRUCTURE WITH FACTORY-APPLIED FSK. COMPLY WITH ASTM C 1126, TYPE III, GRADE 1.
15. PHENOLIC INSULATION AS PRODUCED BY RESOLCO, INC. IS AN ACCEPTABLE SUBSTITUTE FOR ALL PIPE INSULATION.
16. MINERAL-FIBER, HYDRAULIC-SETTING INSULATING AND FINISHING CEMENT SHALL COMPLY WITH ASTM C 449/C 449M.
17. ADHESIVE MATERIALS SHALL BE COMPATIBLE WITH INSULATION MATERIALS, JACKETS, AND SUBSTRATES AND FOR BONDING INSULATION TO ITSELF AND TO SURFACES TO BE INSULATED, UNLESS OTHERWISE INDICATED.
18. CELLULAR-GLASS AND PHENOLIC ADHESIVE SHALL BE SOLVENT-BASED RESIN ADHESIVE, WITH A SERVICE TEMPERATURE OF MINUS 75 TO PLUS 300°F (MINUS 59 TO PLUS 149°C).
19. FLEXIBLE ELASTOMERIC ADHESIVE SHALL COMPLY WITH MIL-A-23179A, TYPE II, CLASS I.
20. MINERAL-FIBER ADHESIVE SHALL COMPLY WITH MIL-A-3316C, CLASS 2, GRADE A.
21. FSK JACKET ADHESIVE SHALL COMPLY WITH MIL-A-3316C, CLASS 2, GRADE A FOR BONDING INSULATION JACKET LAP SEAMS AND JOINTS.
22. MASTIC MATERIALS SHALL BE COMPATIBLE WITH INSULATION MATERIALS, JACKETS, AND SUBSTRATES; COMPLY WITH MIL-C-19565C, TYPE II.
23. VAPOR-BARRIER MASTIC SUITABLE FOR INDOOR USE ON BELOW AMBIENT SERVICES SHALL BE SOLVENT BASED; WATER-VAPOR PERMEANCE OF 0.05 PERM (0.03 METRIC PERM) AT 35-MIL (0.9-MM) DRY FILM THICKNESS COMPLYING WITH ASTM F 1249; 0 TO 180° F (MINUS 18 TO PLUS 82°C) SERVICE TEMPERATURE RANGE; SOLIDS CONTENT OF 44 PERCENT BY VOLUME AND 62 PERCENT BY WEIGHT COMPLYING WITH ASTM D 1644; AND WHITE IN COLOR.
24. BREATHER MASTIC SUITABLE FOR OUTDOOR USE SHALL BE WATER BASED; WATER-VAPOR PERMEANCE OF 3 PERMS (2 METRIC PERMS) AT 0.0625-INCH (1.6-MM) DRY FILM THICKNESS COMPLYING WITH ASTM F 1249; MINUS 20 TO PLUS 200°F (MINUS 29 TO PLUS 93°C) SERVICE TEMPERATURE RANGE; SOLIDS CONTENT OF 63 PERCENT BY VOLUME AND 73 PERCENT BY WEIGHT; AND WHITE IN COLOR.
25. SEALANTS SHALL BE COMPATIBLE WITH INSULATION MATERIALS, JACKETS, AND SUBSTRATES.
26. JOINT SEALANTS FOR CELLULAR-GLASS AND PHENOLIC PRODUCTS SHALL BE PERMANENTLY FLEXIBLE, ELASTOMERIC; MINUS 100 TO PLUS 300°F (MINUS 73 TO PLUS 149°C) SERVICE TEMPERATURE RANGE; AND WHITE OR GRAY IN COLOR.
27. FSK AND METAL JACKET FLASHING SEALANTS SHALL BE FIRE- AND WATER-RESISTANT, FLEXIBLE, ELASTOMERIC; MINUS 40 TO PLUS 250°F (MINUS 40 TO PLUS 121°C) SERVICE TEMPERATURE RANGE; AND ALUMINUM.
28. ASJ AND PVC JACKET FLASHING SEALANTS SHALL BE FIRE- AND WATER-RESISTANT, FLEXIBLE, ELASTOMERIC; MINUS 40 TO PLUS 250°F (MINUS 40 TO PLUS 121°C) SERVICE TEMPERATURE RANGE; AND WHITE IN COLOR.
29. FACTORY-APPLIED ASJ SHALL BE WHITE, KRAFT-PAPER, FIBERGLASS-REINFORCED SCRIM WITH ALUMINUM-FOIL BACKING; COMPLYING WITH ASTM C 1136, TYPE 1. PAINTED TO MATCH PIPING COLOR CODE.
30. FACTORY-APPLIED FSK JACKET SHALL BE ALUMINUM-FOIL, FIBERGLASS-REINFORCED SCRIM WITH KRAFT-PAPER BACKING; COMPLYING WITH ASTM C 1136, TYPE II.
31. FIELD-APPLIED JACKETS SHALL COMPLY WITH ASTM C 921, TYPE 1, UNLESS OTHERWISE INDICATED.
32. FIELD-APPLIED PVC JACKET SHALL BE HIGH-IMPACT-RESISTANT, UV-RESISTANT PVC COMPLYING WITH ASTM D 1784, CLASS 16354-C; THICKNESS AS SCHEDULED; ROLL STOCK READY FOR SHOP OR FIELD CUTTING AND FORMING. COLOR-CODE JACKETS BASED ON SYSTEM TYPE IN ACCORDANCE WITH BUILDING STANDARDS. ADHESIVE AS RECOMMENDED BY MANUFACTURER.
33. FIELD-APPLIED ALUMINUM JACKET SHALL COMPLY WITH ASTM B 209 (ASTM B 209M), ALLOY 3003, 3005, 3105 OR 5005, TEMPER H-14. MOISTURE BARRIER FOR OUTDOOR APPLICATIONS SHALL BE 3-MIL- (0.75-MM-) THICK, HEAT-BONDED POLYETHYLENE AND KRAFT PAPER. FACTORY-FABRICATED FITTING COVERS SHALL BE OF SAME MATERIAL, FINISH, AND THICKNESS AS JACKET. FIELD-FABRICATED FITTING COVERS MAY BE USED ONLY IF FACTORY-FABRICATED FITTING COVERS ARE NOT AVAILABLE.
34. ASJ TAPE SHALL BE WHITE VAPOR-RETARDER TAPE MATCHING FACTORY-APPLIED JACKET WITH ACRYLIC ADHESIVE, COMPLYING WITH ASTM C 1136; 3 INCH (75 MM) WIDE; 11.5 MILS (0.29 MM) THICK; 90 OUNCES FORCE/INCH (1.0 N/MM) ADHESION; 2 PERCENT ELONGATION; 40 LBF/INCH (7.2 N/MM) TENSILE STRENGTH; AND PRECUT DISKS OR SQUARES.
35. FSK TAPE SHALL BE FOIL-FACE, VAPOR-RETARDER TAPE MATCHING FACTORY-APPLIED JACKET WITH ACRYLIC ADHESIVE; COMPLYING WITH ASTM C 1136; 3 INCH (75 MM) WIDE; 6.5 MILS (0.16 MM) THICK; 90 OUNCES FORCE/INCH (1.0 N/MM) ADHESION; 2 PERCENT ELONGATION; 40 LBF/INCH (7.2 N/MM) TENSILE STRENGTH; AND PRECUT DISKS OR SQUARES.
36. ALUMINUM BANDS SHALL COMPLY WITH ASTM B 209 (ASTM B 209M), ALLOY 3003, 3005, 3105 OR 5005; TEMPER H-14, 0.020 INCH (0.51 M) THICK, 1/2 INCH (13 MM) WIDE WITH CLOSED SEAL.
37. INSULATION PINS SHALL BE USED ON DUCTWORK GREATER THAN 36 INCHES WIDE. INSULATION PINS SHALL BE CAPACITOR-DISCHARGE-WELD-PINS, COPPER- OR ZINC-COATED STEEL PIN, FULLY ANNEALED FOR CAPACITOR-DISCHARGE WELDING, 0.106-INCH- (2.6-MM-) DIAMETER SHANK, LENGTH TO SUIT DEPTH OF INSULATION INDICATED.
38. STAPLES SHALL BE USED ON DUCTWORK 36 INCHES AND SMALLER IN WIDTH. STAPLES SHALL BE OUTWARD-CLINCHING INSULATION STAPLES, NOMINAL 3/4-INCH (19-MM-) WIDE, STAINLESS STEEL ON MONEL.
39. EXAMINE SUBSTRATES AND CONDITIONS FOR COMPLIANCE WITH REQUIREMENTS FOR INSTALLATION AND OTHER CONDITIONS AFFECTING PERFORMANCE OF INSULATION APPLICATION. VERIFY THAT SYSTEMS AND EQUIPMENT TO BE INSULATED HAVE BEEN TESTED AND ARE FREE OF DEFECTS; AND SURFACES TO BE INSULATED ARE CLEAN AND DRY.
40. CLEAN AND DRY SURFACES TO RECEIVE INSULATION. REMOVE MATERIALS THAT WILL ADVERSELY AFFECT INSULATION APPLICATION.
41. COORDINATE INSULATION INSTALLATION WITH THE TRADE INSTALLING HEAT TRACING.
42. MIX INSULATING CEMENTS WITH CLEAN POTABLE WATER.
43. INSTALL INSULATION MATERIALS, ACCESSORIES, AND FINISHES WITH SMOOTH, STRAIGHT, AND EVEN SURFACES; FREE OF VOIDS THROUGHOUT THE LENGTH OF EQUIPMENT, DUCTS AND FITTINGS, AND PIPING INCLUDING FITTINGS, VALVES AND SPECIALTIES.
44. INSTALL INSULATION MATERIALS, FORMS, VAPOR BARRIERS OR RETARDERS, JACKETS, AND THICKNESSES REQUIRED FOR EACH ITEM OF EQUIPMENT, DUCT SYSTEM, AND PIPE SYSTEM AS SPECIFIED IN INSULATION SYSTEM SCHEDULES.
45. INSTALL ACCESSORIES COMPATIBLE WITH INSULATION MATERIALS AND SUITABLE FOR THE SERVICE. INSTALL ACCESSORIES THAT DO NOT CORRODE, SOFTEN, OR OTHERWISE ATTACK INSULATION OR JACKET IN EITHER WET OR DRY STATE.
46. INSTALL INSULATION WITH LONGITUDINAL SEAMS AT TOP AND BOTTOM OF HORIZONTAL RUNS.
47. INSTALL MULTIPLE LAYERS OR INSULATION WITH LONGITUDINAL AND END SEAMS STAGGERED.
48. DO NOT WELD BRACKETS, CLIPS, OR OTHER ATTACHMENT DEVICES TO PIPING, FITTINGS, AND SPECIALTIES.
49. KEEP INSULATION MATERIALS DRY DURING APPLICATION AND FINISHING.
50. INSTALL INSULATION WITH TIGHT LONGITUDINAL SEAMS AND END JOINTS. BOND SEAMS AND JOINTS WITH ADHESIVE RECOMMENDED BY INSULATION MATERIAL MANUFACTURER.
51. WHERE VAPOR BARRIER IS INDICATED, SEAL JOINTS, SEAMS, AND PENETRATIONS IN INSULATION AT HANGERS, SUPPORTS, ANCHORS, AND OTHER PROJECTIONS WITH VAPOR-BARRIER MASTIC.
52. APPLY ADHESIVES, MASTICS, AND SEALANTS AT MANUFACTURER'S RECOMMENDED COVERAGE RATE AND WET AND DRY FILM THICKNESSES.
53. CUT INSULATION IN A MANNER TO AVOID COMPRESSING INSULATION MORE THAN 75 PERCENT OF ITS NOMINAL THICKNESS.
54. FINISH INSTALLATION WITH SYSTEMS AT OPERATING CONDITIONS. REPAIR JOINT SEPARATIONS AND CRACKING DUE TO THERMAL MOVEMENT.
55. INSTALL INSULATION CONTINUOUSLY THROUGH PENETRATIONS.

INSULATION FOR HVAC DUCTWORK, EQUIPMENT, AND PIPING (CONT'D)

56. WHERE FIELD-APPLIED METAL JACKETS ARE INDICATED, INSTALL WITH 2-INCH (50-MM) OVERLAP AT LONGITUDINAL SEAMS AND END JOINTS. OVERLAP LONGITUDINAL SEAMS ARRANGED TO SHED WATER. SEAL END JOINTS WITH WATERPROOF SEALANT RECOMMENDED BY INSULATION MANUFACTURER. SECURE JACKET WITH STAINLESS-STEEL BANDS 12-INCH (300-MM) O.C. AND AT END JOINTS.
57. OUTDOOR RETURN AIR AND SUPPLY AIR DUCT INSULATION SHALL BE 2" THICK MINERAL-FIBER BLANKET, AND 0.75-LB.CU.FT. (12-KG/CU.M) NOMINAL DENSITY. FIELD APPLIED ALUMINUM JACKETING.
58. OUTDOOR CHILLED WATER:
    A. NPS 12 (DN 300) AND SMALLER SHALL BE 2-1/2 INCH (38 MM) THICK CELLULAR GLASS; 2 INCH (25 MM) THICK FLEXIBLE ELASTOMERIC; OR 2 INCH (25 MM) THICK PHENOLIC. 20 MILS (0.5 MM) THICK PVC JACKET OR ALUMINUM JACKETING.
59. OUTDOOR HEATING WATER, CONDENSATE DRAIN, AND STEAM:
    A. NPS 12 (DN 300) AND SMALLER SHALL BE 3 INCH (60 MM) THICK MINERAL-FIBER, PERFORMED PIPE, TYPE I. FIELD APPLIED ALUMINUM JACKETING.

INDOOR CENTRAL STATION AIR HANDLING UNITS

1. ACCEPTABLE MANUFACTURERS: JOHNSON CONTROLS INC. SOLUTION INDOOR (XTI) PER INNOVATION MEMORANDUM #12.
2. SUBMITTAL DATA: INCLUDE CONSTRUCTION DETAILS, MATERIAL DESCRIPTIONS, DIMENSIONS OF INDIVIDUAL COMPONENTS AND PROFILES, AND FINISHES. INCLUDE RATED CAPACITIES, OPERATING CHARACTERISTICS, ELECTRICAL CHARACTERISTICS, AND FURNISHED SPECIALTIES AND ACCESSORIES. INCLUDE UNIT DIMENSIONS AND WEIGHTS. INCLUDE CABINET MATERIAL, METAL THICKNESS, FINISHES, INSULATION, AND ACCESSORIES. INCLUDE CERTIFIED FAN-PERFORMANCE CURVES WITH SYSTEM OPERATING CONDITIONS INDICATED, CERTIFIED FAN-SOUND POWER RATINGS, FAN CONSTRUCTION AND ACCESSORIES, MOTOR RATINGS, ELECTRICAL CHARACTERISTICS, AND MOTOR ACCESSORIES. INCLUDE CERTIFIED COIL-PERFORMANCE RATINGS WITH SYSTEM OPERATING CONDITIONS INDICATED. INCLUDE FILTERS WITH PERFORMANCE CHARACTERISTICS. INCLUDE DAMPERS WITH HOUSINGS, LINKAGES, AND OPERATORS. INCLUDE SHOP DRAWINGS INDICATING CONFIGURATION, DIMENSIONS, WEIGHTS, LOADS, REQUIRED CLEARANCES, METHOD OF FIELD ASSEMBLY, COMPONENTS, LOCATION AND SIZE OF FIELD CONNECTIONS. INCLUDE DETAILED FABRICATION AND ASSEMBLY INSTRUCTIONS WITH PROCEDURES AND DIAGRAMS. INCLUDE DIAGRAMS FOR POWER, SIGNAL, AND CONTROL WIRING. CLOSEOUT SUBMITTALS TO INCLUDE OPERATION AND MAINTENANCE DATA.
3. FURNISH EXTRA MATERIALS THAT MATCH PRODUCTS INSTALLED AND THAT ARE PACKAGED WITH PROTECTIVE COVERING FOR STORAGE AND IDENTIFIED WITH LABELS DESCRIBING CONTENTS:
    A. FILTERS: TWO SETS FOR EACH AIR HANDLING UNIT.
    B. GASKETS: ONE SET FOR EACH ACCESS DOOR.
4. PROVIDE ENTIRE UNIT PARTS AND LABOR WARRANTY FOR 12 MONTHS FROM DATE OF SUBSTANTIAL COMPLETION. WARRANTY SHALL COVER MANUFACTURER DEFECTS. WARRANTY WORK SHALL BE PERFORMED BY MANUFACTURER'S FACTORY-TRAINED AND FACTORY-EMPLOYED TECHNICIAN.
5. ELECTRICAL COMPONENTS, DEVICES, AND ACCESSORIES: LISTED AND LABELED AS DEFINED IN NFPA 70, BY A QUALIFIED TESTING AGENCY, AND MARKED FOR INTENDED LOCATION AND APPLICATION.
6. NFPA COMPLIANCE: COMPLY WITH NFPA 90A FOR DESIGN, FABRICATION, AND INSTALLATION OF AIR-HANDLING UNITS AND COMPONENTS.
7. ASHRAE 62.1 COMPLIANCE: APPLICABLE REQUIREMENTS IN ASHRAE 62.1, SECTION 5 - "SYSTEMS AND EQUIPMENT" AND SECTION 7 - "CONSTRUCTION AND STARTUP."
8. ASHRAE/IES 90.1 COMPLIANCE: APPLICABLE REQUIREMENTS IN ASHRAE/IES 90.1, SECTION 6 - "HEATING, VENTILATING, AND AIR-CONDITIONING."
9. STRUCTURAL PERFORMANCE: CASING PANELS SHALL BE SELF-SUPPORTING AND CAPABLE OF WITHSTANDING POSITIVE/NEGATIVE 8-INCH WG OF INTERNAL STATIC PRESSURE, WITHOUT EXCEEDING A MIDPOINT DEFLECTION OF L/240.
10. CASING LEAKAGE PERFORMANCE: ASHRAE 111, CLASS 6 LEAKAGE OR BETTER AT POSITIVE/NEGATIVE 8-INCH WG INTERNAL STATIC PRESSURE.
11. FURNISH AND INSTALL AIR HANDLING UNITS AS SCHEDULED AND SPECIFIED. AIR HANDLING UNIT SHALL CONSIST OF A STRUCTURAL BASE, INSULATED CASING, ACCESS DOORS, FANS, MOTORS, MOTOR CONTROLS, COILS, FILTERS, DAMPERS, COMPONENTS AND ACCESSORIES AS SHOWN ON DRAWINGS AND SCHEDULES. UNIT CONSTRUCTION AND FEATURES (CASING, INSULATION, COILS, FILTERS, DAMPERS, FANS, MOTORS, STARTERS, ETC.) SHALL COMPLY WITH HCA HEALTHCARE DESIGN AND ENGINEERING GUIDELINES FOR HOSPITALS. REFER TO DETAILS AND SCHEDULES FOR ADDITIONAL PERFORMANCE AND INSTALLATION REQUIREMENTS.
12. THE ENTIRE AHU ASSEMBLY SHALL BE SEISMICALLY CERTIFIED PER IBC AND CARRY THE OSHPD (OSP) CERTIFICATION.
13. DO NOT USE AIR-HANDLING UNITS FOR TEMPORARY HEATING, COOLING, OR VENTILATION PRIOR TO COMPLETE INSPECTION AND PERFORMANCE OF STARTUP SERVICE.
14. STORE AIR-HANDLING UNITS PER MANUFACTURER'S WRITTEN RECOMMENDATIONS.
15. RIG AND LIFT AIR-HANDLING UNITS AND SECTIONS ACCORDING TO MANUFACTURER'S WRITTEN INSTRUCTIONS.
16. INSTALL AIR-HANDLING UNIT ON FIELD-FABRICATED SUPPORT PLATFORM.
17. ARRANGE INSTALLATION OF UNITS TO PROVIDE ACCESS SPACE AROUND AIR-HANDLING UNITS FOR SERVICE AND MAINTENANCE, COIL PULLS, AND FAN REMOVAL.
18. DO NOT OPERATE FAN SYSTEM UNTIL FILTERS (TEMPORARY OR PERMANENT) ARE IN PLACE. REPLACE TEMPORARY FILTERS USED DURING CONSTRUCTION AND TESTING WITH NEW, CLEAN FILTERS.
19. CONNECT DUCTS TO AIR-HANDLING UNITS WITH FLEXIBLE CONNECTIONS.
20. DRAWINGS INDICATED GENERAL ARRANGEMENT OF PIPING, FITTINGS, AND SPECIALTIES. COORDINATE FINAL PIPING ARRANGEMENT AND EQUIPMENT CONNECTIONS WITH FIELD CONDITIONS AND MANUFACTURER CERTIFIED SHOP DRAWINGS.
21. WHERE INSTALLING PIPING ADJACENT TO AIR-HANDLING UNIT, ALLOW SUFFICIENT SPACE FOR SERVICE AND MAINTENANCE.
22. CONNECTION PIPING TO AIR-HANDLING UNITS MOUNTED ON VIBRATION ISOLATORS WITH FLEXIBLE CONNECTORS.
23. CONNECT CONDENSATE DRAIN PANS USING NPS 1-1/4, ASTM B88, TYPE M COPPER TUBING. EXTENDED TO NEAREST EQUIPMENT OR FLOOR DRAIN. CONSTRUCT DEEP TRAP AT CONNECTION TO DRAIN PAN AND INSTALL CLEANOUTS AT CHANGES IN DIRECTIONS.
24. HOT- AND CHILLED-WATER PIPING AND SPECIALTIES SHALL COMPLY WITH REQUIREMENTS IN "PIPING" AND DETAILS.
25. CONNECT CONTROL AND POWER WIRING, AND GROUND EQUIPMENT IN ACCORDANCE WITH ELECTRICAL SPECIFICATIONS.
26. INSTALL ELECTRICAL DEVICES FURNISHED BY MANUFACTURER, BUT NOT FACTORY MOUNTED, ACCORDING TO NFPA 70 AND NECA 1.
27. INSTALL NAMEPLATE FOR EACH ELECTRICAL CONNECTION, INDICATING ELECTRICAL EQUIPMENT DESIGNATION AND CIRCUIT NUMBER FEEDING CONNECTION.
28. INSTALL CONTROL AND ELECTRICAL POWER WIRING TO FIELD-MOUNTED CONTROL DEVICES.
29. STARTUP SERVICE: ENGAGE A FACTORY-AUTHORIZED SERVICE REPRESENTATIVE TO PERFORM STARTUP SERVICE. COMPLETE INSTALLATION AND STARTUP CHECKS ACCORDING TO MANUFACTURER'S WRITTEN INSTRUCTIONS. VERIFY THAT SHIPPING, BLOCKING, AND BRACING ARE REMOVED. VERIFY NO DAMAGE OF ANY KIND. VERIFY PROPER ASSEMBLY AND SEALING OF UNIT SEGMENTS AT SHIPPING SPLITS. VERIFY INSTALLATION OF ANY SHIPPED-LOOSE PARTS. VERIFY AIR-TIGHT SEALS AROUND WIRING, CONDUITS AND PIPING PENETRATIONS THROUGH AIR-HANDLING UNIT CASING. VERIFY CONDENSATE TRAPS ARE CHARGED WITH WATER. VERIFY THAT UNIT IS SECURE TO MOUNTING AND SUPPORTING DEVICES AND THAT CONNECTIONS TO PIPING, DUCTS, AND ELECTRICAL SYSTEMS ARE COMPLETE. VERIFY THAT PROPER THERMAL-OVERLOAD PROTECTION IS INSTALLED IN MOTORS, CONTROLLERS, AND SWITCHES. VERIFY PROPER MOTOR ROTATION DIRECTION, FREE FAN WHEEL ROTATION, AND SMOOTH BEARING OPERATIONS. VERIFY THAT BEARINGS, PULLEYS, BELTS, AND OTHER MOVING PARTS ARE LUBRICATED WITH FACTORY-RECOMMENDED LUBRICANTS. VERIFY THAT OUTDOOR- AND RETURN-AIR MIXING DAMPERS FULLY OPEN AND CLOSE, AND MAINTAIN MINIMUM OUTDOOR-AIR SETTING. VERIFY TIGHTNESS OF DAMPER LINKAGES. COMB COIL FINS FOR PARALLEL ORIENTATION. VERIFY COMPLETE INSTALLATION OF CONTROL SYSTEM INCLUDING END DEVICES AND WIRING. VERIFY THAT NEW, CLEAN FILTERS HAVE BEEN INSTALLED AND THAT FILTER GAUGES ARE SET TO ZERO. VERIFY THAT MANUAL AND AUTOMATIC VOLUME CONTROL DAMPERS, AND FIRE AND SMOKE DAMPERS IN CONNECTED DUCT SYSTEMS ARE IN FULLY OPEN POSITION. RESOLVE ANY NON-COMPLIANT ITEMS PRIOR TO UNIT STARTUP.
30. IN ADDITION TO MANUFACTURER WRITTEN STARTUP PROCEDURES, THE FOLLOWING STARTING PROCEDURES FOR AIR-HANDLING UNITS SHALL INCLUDE: ENERGIZE THE UNIT DISCONNECT SWITCH. VERIFY CORRECT VOLTAGE, PHASES AND CYCLES. ENERGIZE FAN MOTOR BRIEFLY ("BUMP") AND VERIFY CORRECT DIRECTION OF ROTATION. VERIFY PROPER OPERATION OF MOTOR, DRIVE SYSTEM, AND FAN WHEEL. ADJUST FAN TO INDICATED RPM. MEASURE AND RECORD MOTOR ELECTRICAL VALUES FOR VOLTAGE AND AMPERAGE. MANUALLY OPERATE DAMPERS FROM FULLY CLOSED TO FULLY OPEN POSITIONS AND RECORD FAN AND MOTOR PERFORMANCE. VERIFY MOTOR FLA IS WITHIN MANUFACTURER'S NAMEPLATE TOLERANCE FOR EACH PHASE. FACTORY-TRAINED AND -AUTHORIZED SERVICE TECHNICIAN SHALL INSPECT, TEST, ADJUST, PROGRAM AND START THE VARIABLE FREQUENCY DRIVES. ENSURE THAT CRITICAL RESONANT FREQUENCIES ARE PROGRAMMED AS 'SKIP FREQUENCIES' IN THE VFD CONTROLLER. SUBMIT A STARTUP REPORT SUMMARIZING ANY PROBLEMS FOUND AND REMEDIES PERFORMED.
31. COMPLY WITH REQUIREMENTS IN "TESTING, ADJUSTING, AND BALANCING FOR HVAC" FOR AIR-HANDLING SYSTEM TESTING, ADJUSTING, AND BALANCING.
32. OCCUPANCY ADJUSTMENTS: WHEN REQUESTED WITHIN 12 MONTHS FROM DATE OF SUBSTANTIAL COMPLETION, PROVIDE ON-SITE ASSISTANCE IN ADJUSTING SYSTEM TO SUIT ACTUAL OCCUPIED CONDITIONS. PROVIDE UP TO TWO VISITS TO PROJECT DURING OTHER-THAN-NORMAL OCCUPANCY HOURS FOR THIS PURPOSE.
33. AFTER COMPLETING SYSTEM INSTALLATION AND TESTING, ADJUSTING, AND BALANCING AIR-HANDLING UNIT AND AIR-DISTRIBUTION SYSTEMS AND AFTER COMPLETING STARTUP SERVICE, CLEAN AIR-HANDLING UNITS INTERNALLY AND REMOVE FOREIGN MATERIAL AND CONSTRUCTION DIRT AND DUST. CLEAN FAN WHEELS, CABINETS, DAMPERS, COILS, AND FILTER HOUSINGS, AND INSTALL NEW, CLEAN FILTERS.
34. PERFORM THE FOLLOWING TESTS AND INSPECTIONS WITH THE ASSISTANCE OF A FACTORY-AUTHORIZED SERVICE REPRESENTATIVE: AFTER INSTALLATION, FILL WATER COILS WITH WATER AND TEST COILS AND CONNECTIONS FOR LEAKS. REPAIR LEAKS AND RETEST UNTIL NO LEAKS EXIST. AFTER CIRCUITRY HAS BEEN ENERGIZED, START UNITS TO CONFIRM MOTOR ROTATION AND UNIT OPERATION. TEST AND ADJUST CONTROLS AND SAFETIES. REPLACE DAMAGED AND MALFUNCTIONING CONTROLS AND EQUIPMENT. AIR-HANDLING UNIT OR COMPONENTS WILL BE CONSIDERED DEFECTIVE IF UNIT OR COMPONENTS DO NOT PASS TESTS AND INSPECTIONS. PREPARE TEST AND INSPECTION REPORTS.
35. ENGAGE A FACTORY-AUTHORIZED SERVICE REPRESENTATIVE TO TRAIN OWNER'S MAINTENANCE PERSONNEL TO ADJUST, OPERATE, AND MAINTAIN AIR-HANDLING UNITS.
36. PROVIDE A HARD COPY OF INSTALLATION INSTRUCTION MANUAL AND STARTUP CHECKLIST IN THE SUPPLY FAN SECTION OF EACH AIR-HANDLING UNIT.
37. PROVIDE SIX HARD COPIES OF THE SPARE PARTS MANUAL FOR OWNER'S PROJECT SYSTEM MANUAL.

VARIABLE FREQUENCY MOTOR CONTROLLERS

1. ACCEPTABLE MANUFACTURERS: ABB, DANFOSS, TOSHIBA, SQUARE D/SCHNEIDER, YASKAWA, OR JCI.
2. MAINTENANCE MATERIALS: SPARE POWER AND CONTROL POWER FUSES EQUAL TO 10 PERCENT OF QUANTITY INSTALLED FOR EACH SIZE AND TYPE, BUT NO FEWER THAN 3 OF EACH SIZE AND TYPE; TWO SPARE INDICATING LIGHTS OF EACH TYPE AND COLOR INSTALLED; ONE SPARE AUXILIARY CONTACT FOR EACH SIZE AND TYPE OF MAGNETIC CONTROLLER; AND THREE SPARE POWER CONTACTS FOR EACH SIZE AND TYPE OF MAGNETIC CONTRACTOR.
3. WARRANTY: MANUFACTURER AGREES TO REPAIR OR REPLACE VFC THAT FAIL IN MATERIALS OR WORKMANSHIP WITHIN 36 MONTHS FROM STARTUP.
4. LISTED AND LABEL AS DEFINED IN NFPA 70, BY A QUALIFIED TESTING AGENCY, AND MARKED FOR INTENDED LOCATION AND APPLICATION.
5. VARIABLE TORQUE APPLICATION.
6. MATCH LOAD TYPE AND TYPE OF CONNECTION USED BETWEEN MOTOR AND LOAD.
7. VFC SHALL BE PROVIDED WITH INTERFACE FOR BUILDING AUTOMATION SYSTEM (BAS). VFC SHALL NOT BE INSTALLED ON OWNER IT NETWORK.
8. VFC MOTOR TRANSFER CIRCUIT SHALL INCLUDE THREE CONTACTS FOR BYPASS SWITCHING FROM LINE TO VFC AND VICE VERSA.
9. MOTORS 50 HP AND UNDER SHALL BE MINIMUM 6-PULSE DRIVES. MOTORS LARGER THAN 50 HP SHALL BE PROVIDED WITH A 6-PULSE DRIVE WITH PASSIVE HARMONIC FILTER OR MINIMUM 18-PULSE SHIFTING TRANSFORMER.
10. VFC SHALL MEET IEEE 519 AT THE INPUT TERMINALS OF THE VFC, AND TDD LEVEL SHOULD CORRESPOND TO ISC/IL LESS THAN 20.
11. TOTAL HARMONIC CURRENT DISTORTION (THiD) SHALL BE 5 PERCENT OR LESS AT LOADS GREATER THAN 60%, TOTAL HARMONIC VOLTAGE DISTORTION (THvD) SHALL BE LESS THAN 2 PERCENT WITH 5 PERCENT VOLTAGE IMBALANCE.
12. TOTAL POWER FACTOR SHALL BE GREATER THAN 98 PERCENT AT LOADS GREATER THAN 50 PERCENT.
13. VFC SHALL HAVE THE ABILITY TO LOCK OUT CRITICAL SPEEDS.
14. THE FILTER TRANSFORMER SHALL BE COMPATIBLE WITH THE 6 PULSE INVERTER. ALL COMPONENTS SHALL BE INSTALLED IN A SINGLE CONTIGUOUS ENCLOSURE.
15. ALL VFCS SHALL BE IDENTICAL REGARDLESS OF HARMONIC FILTERING, PROVIDED BY A SINGLE MANUFACTURER.
16. THE HARMONIC FILTER/TRANSFORMER SHALL TREAT ALL CHARACTERISTIC LOW FREQUENCY HARMONICS GENERATED BY A THREE PHASE FULL WAVE CONVERTER.
17. THE HARMONIC FILTER SHALL NEVER INTRODUCE A CAPACITIVE REACTIVE POWER (KVAR) WHICH IS GREATER THAN 20 PERCENT OF ITS KVA RATING.
18. FILTER/TRANSFORMER TO BE DISCONNECTED FROM CIRCUIT WHEN OPERATING IN BYPASS MODE.
19. VFC WITH ACTIVE FRONT END UNITS AND REGENERATIVE VFC ARE NOT ALLOWED.
20. VFC ENCLOSURE NEMA 12. NEMA 1 MAY BE ACCEPTED PENDING APPROVAL IF LEAD TIME CAN BE IMPROVED.
21. WIRING DISTANCE SHALL NOT EXCEED MANUFACTURER RECOMMENDATIONS FOR REMOTE DRIVES.
22. INSTALL WITH TOPS AT UNIFORM HEIGHT AND WITH DISCONNECT OPERATING HANDLES NOT HIGER THAN 79 INCHES (2000 MM) ABOVE FINISHED FLOOR. BOLT UNITS TO WALL OR MOUNTING ON LIGHTWEIGHT STRUCTURAL STEEL CHANNELS BOLTED TO WALL. FOR CONTROLLERS NOT ON WALL, PROVIDE FREESTANDING RACKS.
23. INSTALL WIRING BETWEEN VFC AND REMOTE DEVICE AND FACILITY'S CENTRAL-CONTROL SYSTEM COMPLYING WITH CONTROL-VOLTAGE ELECTRICAL POWER CABLE SPECIFICATIONS.
24. COMPLY WITH IDENTIFICATION FOR ELECTRICAL SYSTEMS SPECIFICATIONS.
25. A FACTORY-AUTHORIZED SERVICE REPRESENTATIVE SHALL TEST AND INSPECT COMPONENTS, ASSEMBLIES, EQUIPMENT INSTALLATION, AND CONNECTIONS.
26. TEST AND ADJUST CONTROLLER, COMPONENTS, AND EQUIPMENT.

HYDRONIC PUMPS

1. ACCEPTABLE MANUFACTURERS: PEERLESS, ARMSTRONG, BELL & GOSSETT, AURORA, PACO, TACO, GRUNDFOS, AND WEINMAN.
2. SUBMITTAL DATA: INCLUDE CERTIFIED PERFORMANCE CURVES AND RATED CAPACITIES, OPERATING CHARACTERISTICS, FURNISHED SPECIALTIES, FINAL IMPELLER DIMENSIONS, AND ACCESSORIES FOR EACH TYPE OF PRODUCT INDICATED. INDICATED PUMP'S OPERATING POINT ON CURVES. SHOW PUMP LAYOUT AND CONNECTIONS. INCLUDE SETTING DRAWINGS WITH TEMPLATES FOR INSTALLING FOUNDATION AND ANCHOR BOLTS AND OTHER ANCHORAGES. POWER, SIGNAL, AND CONTROL WIRING DIAGRAMS. INSTALLATION, OPERATION, AND MAINTENANCE DATA.
3. CLOSE-COUPLED, IN-LINE CENTRIFUGAL PUMPS: FACTORY-ASSEMBLED AND -TESTED, CENTRIFUGAL, OVERHUNG-IMPELLER, SEPARATELY COUPLED, IN-LINE PUMP AS DEFINED IN HI 1.1-1.2 AND HI 1.3; DESIGNED FOR INSTALLATION WITH PUMP AND MOTOR SHAFTS MOUNTED HORIZONTALLY OR VERTICALLY. RATE PUMP FOR 175-PSIG (1204-KPA) MAXIMUM WORKING PRESSURE AND A CONTINUOUS MAXIMUM FLUID TEMPERATURE OF 250°F (121°C). THE PUMP INTERNALS SHALL BE CAPABLE OF BEING SERVICED WITHOUT DISTURBING PIPING CONNECTIONS.
    A. CASING: RADIALLY SPLIT, CAST IRON, WITH REPLACEABLE BRONZE WEAR RINGS, THREADED GAGE TAPPINGS AT INLET AND OUTLET, AND THREADED FLANGED CONNECTIONS.
    B. IMPELLER: ASTM B584, CAST BRONZE; STATICALLY AND DYNAMICALLY BALANCED, KEYED TO SHAFT, AND SECURED WITH A LOCKING CAP SCREW.
    C. PUMP SHAFT: TYPE 304 STAINLESS STEEL.
    D. MECHANICAL SEAL: CARBON ROTATING RING AGAINST A CERAMIC SEAT HELD BY A STAINLESS-STEEL RING, AND EPDM OR EPR BELLOWS AND GASKET. INCLUDE WATER SLINGER ON SHAFT BETWEEN MOTOR AND SEAL.
    E. SHAFT FLUSHING: FLUSH, COOL, AND LUBRICATE PUMP SEAL BY DIRECTING PUMP DISCHARGE WATER TO FLOW OVER THE SEAL.
    F. MOTOR: TOTALLY-ENCLOSED, FAN-COOLED (TEFC), NEMA MG-1 PREMIUM EFFICIENCY, AND INVERTER-DUTY READY. CONTROLLERS, ELECTRICAL DEVICES, AND WIRING TO COMPLY WITH REQUIREMENTS FOR ELECTRICAL DEVICES AND CONNECTIONS SPECIFIED IN ELECTRICAL SPECIFICATIONS.
4. EXAMINE ROUGHING-IN FOR PIPING SYSTEMS TO VERIFY ACTUAL LOCATIONS OF PIPING CONNECTIONS BEFORE PUMP INSTALLATION. PROCEED WITH INSTALLATION ONLY AFTER UNSATISFACTORY CONDITIONS HAVE BEEN CORRECTED.
5. PUMP INSTALLATION: COMPLY WITH HI 1.4. INSTALL PUMPS WITH ACCESS FOR PERIODIC MAINTENANCE INCLUDING REMOVAL OF MOTORS, IMPELLERS, COUPLINGS, AND ACCESSORIES. INDEPENDENTLY SUPPORT PUMPS AND PIPING SO WEIGHT OF PIPING IS NOT SUPPORTED BY PUMPS AND WEIGHT OF PUMPS IS NOT SUPPORTED BY PIPING.
6. INSTALL IN-LINE PUMPS WITH CONTINUOUS-THREAD HANGER RODS AND ELASTOMERIC HANGERS OF SIZE REQUIRED TO SUPPORT WEIGHT OF IN-LINE PUMPS.
7. INSTALL PIPING ADJACENT TO MACHINE TO ALLOW SERVICE AND MAINTENANCE. CONNECT PIPING TO PUMPS. INSTALL VALVES THAT ARE SAME SIZE AS PIPING CONNECTED TO PUMPS. INSTALL SUCTION AND DISCHARGE PIPE SIZES EQUAL TO OR GREATER THAN DIAMETER OF PUMP NOZZLES.
8. INSTALL TRIPLE-DUTY VALVE ON DISCHARGE SIDE OF PUMP.
9. INSTALL Y-TYPE STRAINER, SUCTION DIFFUSER, AND SHUTOFF VALVE ON SUCTION SIDE OF PUMPS. INSTALL FLEXIBLE CONNECTORS ON SUCTION AND DISCHARGE SIDES OF PUMPS BETWEEN PUMP CASING AND VALVES.
10. INSTALL SINGLE PRESSURE GAGE WITH MULTIPLE INPUT SELECTOR VALVES ON PUMP SUCTION AND DISCHARGE, AT INTEGRAL PRESSURE-GAGE TAPPING.
11. CONNECT POWER AND CONTROL WIRING, AND GROUND EQUIPMENT IN ACCORDANCE WITH ELECTRICAL SPECIFICATIONS.
12. INSTALL ELECTRICAL DEVICES FURNISHED BY MANUFACTURER, BUT NOT FACTORY MOUNTED, IN ACCORDANCE WITH NFPA 70 AND NECA 1.
13. INSTALL NAMEPLATE FOR EACH ELECTRICAL CONNECTION, INDICATING ELECTRICAL EQUIPMENT DESIGNATION AND CIRCUIT NUMBER FEEDING CONNECTION.
14. STARTUP SERVICE: COMPLETE INSTALLATION AND STARTUP CHECKS IN ACCORDANCE WITH MANUFACTURER'S WRITTEN INSTRUCTIONS. CHECK PIPING CONNECTIONS FOR TIGHTNESS. CLEAN STRAINERS ON SUCTION PIPING. USE STARTUP STRAINER FOR INITIAL STARTUP. VERIFY BEARING LUBRICATION. VERIFY THAT PUMP IS FREE TO ROTATE BY HAND AND THAT PUMP FOR HANDLING HOT LIQUID IS FREE TO ROTATE WITH PUMP HOT AND COLD. IF PUMP IS BOUND OR DRAGS, DO NOT OPERATE UNTIL CAUSE OF TROUBLE IS DETERMINED AND CORRECTED. VERIFY THAT PUMP IS ROTATING IN CORRECT DIRECTION. PRIME PUMP BY OPENING SUCTION VALVES AND CLOSING DRAINS, AND PREPARE PUMP FOR OPERATION. START MOTOR AND SLOWLY OPEN DISCHARGE VALVE. PREPARE STARTUP SERVICE REPORT.
15. PERFORM THE FOLLOWING TESTS AND INSPECTIONS: AFTER ELECTRICAL CIRCUITRY HAS BEEN ENERGIZED, START UNITS TO CONFIRM PROPER MOTOR ROTATION AND UNIT OPERATION. TEST AND ADJUST CONTROLS AND SAFETIES. REPLACE DAMAGED AND MALFUNCTIONING CONTROLS AND EQUIPMENT. HYDRONIC PUMPS WILL BE CONSIDERED DEFECTIVE IF THEY DO NOT PASS TESTS AND INSPECTIONS. PREPARE TEST AND INSPECTION REPORTS.
16. TRAIN OWNER'S MAINTENANCE PERSONNEL TO ADJUST, OPERATE, AND MAINTAIN HYDRONIC PUMPS.

INSTRUMENTATION AND CONTROL FOR HVAC

1. THE BAS/DDC SHALL USE BACNET/IP PROTOCOL CAPABLE OF COMMUNICATING OVER AN ETHERNET SYSTEM. IT SHALL BE CAPABLE RESIDING ON THE HCA ENTERPRICE WAN/LAN BY HAVING AN ASSIGNED IP ADDRESS. BAS/DDC SYSTEMS ARE REQUIRED TO PERMIT A REMOTE USED WITH PASSWORD ACCESS, MONITOR POINTS AND ISSUE BASIC COMMANDS OVER THE HCA WAN/LAN USING A PC TYPE TERMINAL WITHOUT THE NEED FOR PROPRIETARY BAS/DDC SOFTWARE. THE SYSTEM DATABASE SHALL RESIDE ON THE OWNER-FURNISHED SERVER, NOT A PC. THE USER INTERFACE IS TO BE INSTALLED ON THE OWNER-FURNISHED WORKSTATION. JOHNSON CONTROLS TO COORDINATE AND VERIFY WITH FACILITIGROUP AUTOMATION SERVICES MANAGER FULL BAS COMMUNICATION BETWEEN THE FACILITY AND FACILITIGROUP AUTOMATION SERVICES.
2. REFER TO DRAWINGS FOR SEQUENCES OF OPERATIONS.
3. CONTROL SYSTEM SHALL BE PROVIDED BY JOHNSON CONTROLS, INC. METASYS, CONSISTING OF SENSORS, INDICATORS, ACTUATORS, FINAL CONTROL ELEMENTS, INTERFACE EQUIPMENT, OTHER APPARATUS, AND ACCESSORIES TO CONTROL MECHANICAL SYSTEMS.
4. JOHNSON CONTROLS TO INTEGRATE NEW DDC EQUIPMENT INTO EXISTING OPERATOR WORKSTATION.
5. JOHNSON CONTROLS TO COMPLY WITH HCA HEALTHCARE DESIGN AND ENGINEERING GUIDELINES FOR HOSPITALS FOR BUILDING AUTOMATION SYSTEM/DIRECT DIGITAL CONTROL, I/O INTERFACE, POWER SUPPLIES, POWER LINE FILTERING, CONTROL CABLE, POINT NAME STANDARDS, BAS GRAPHICS, AND SEQUENCE OF OPERATIONS.
6. JOHNSON CONTROLS SHALL FURNISH THE TAB CONTRACTOR WITH THE APPROPRIATE DDC SYSTEM SOFTWARE AVAILABLE TO ASSIST IN THE TAB PROCESS. JOHNSON CONTROLS HALL PROVIDE A TECHNICIAN TO ASSIST/TRAIN THE TAB TECHNICIAN IN THE COORDINATION/INTERFACE OF THE BAS WITH THE TAB ACTIVITIES.
7. JOHNSON CONTROLS SHALL BE AN ACTIVE PARTICIPANT IN THE COMMISSIONING PROCESS.
8. ELECTRICAL COMPONENTS, DEVICES, AND ACCESSORIES SHALL BE LISTED AND LABELED AS DEFINED IN NFPA 70, ARTICLE 100, BY A TESTING AGENCY ACCEPTABLE TO AUTHORITIES HAVING JURISDICTION, AND MARKED FOR INTENDED USE.
9. COMPLY WITH ASHRAE 135 FOR DDC SYSTEM COMPONENTS.
10. PERFORM THE FOLLOWING FIELD TESTS AND INSPECTIONS AND PREPARE TEST REPORTS:
    A. OPERATIONAL TEST: AFTER ELECTRICAL CIRCUITRY HAS BEEN ENERGIZED, START UNITS TO CONFIRM PROPER UNIT OPERATION. REMOVE AND REPLACE MALFUNCTIONING UNITS AND RETEST.
    B. TEST AND ADJUST CONTROLS AND SAFETIES.
    C. TEST CALIBRATION OF ELECTRONIC CONTROLLERS BY DISCONNECTING INPUT SENSORS AND STIMULATING OPERATION WITH COMPATIBLE SIGNAL GENERATOR.
    D. TEST EACH POINT THROUGH ITS FULL OPERATING RANGE TO VERIFY THAT SAFETY AND OPERATING CONTROL SET POINTS ARE AS REQUIRED.
    E. TEST EACH CONTROL LOOP TO VERIFY STABLE MODE OF OPERATION AND COMPLIANCE WITH SEQUENCE OF OPERATION. ADJUST PID ACTIONS AS NEEDED.
    F. TEST EACH SYSTEM FOR COMPLIANCE WITH SEQUENCE OF OPERATION.
    G. TEST SOFTWARE AND HARDWARE INTERLOCKS.
11. DDC VERIFICATION:
    A. VERIFY THAT INSTRUMENTS ARE INSTALLED BEFORE CALIBRATION, TESTING, AND LOOP CHECKS.
    B. CHECK INSTRUMENTS FOR PROPER LOCATION AND ACCESSIBILITY.
    C. CHECK INSTRUMENT INSTALLATION FOR DIRECTION OF FLOW, ELEVATION, ORIENTATION, INSERTION DEPTH, AND OTHER APPLICABLE CONSIDERATIONS.
    D. CHECK FLOW INSTRUMENTS. INSPECT TAG NUMBER AND LINE AND BORE SIZE, AND VERIFY THAT INLET SIDE IS IDENTIFIED AND THAT METERS ARE INSTALLED CORRECTLY.
    E. CHECK TEMPERATURE INSTRUMENTS AND MATERIAL AND LENGTH OF SENSING ELEMENTS.
    F. CHECK CONTROL VALVES. VERIFY THAT THEY ARE IN CORRECT DIRECTION.
    G. VERIFY THAT DDC CONTROLLER POWER SUPPLY IS FROM EMERGENCY POWER SUPPLY, IF APPLICABLE.
    H. VERIFY THAT WIRES AT CONTROL PANELS ARE TAGGED WITH THEIR SERVICE DESIGNATION AND APPROVED TAGGING SYSTEM.
    I. VERIFY THAT SPARE I/O CAPACITY HAS BEEN PROVIDED.
    J. VERIFY THAT DDC CONTROLLERS ARE PROTECTED FROM POWER SUPPLY SURGES.
12. REPLACE DAMAGED OR MALFUNCTIONING CONTROLS AND EQUIPMENT AND REPEAT TESTING AND VERIFICATION PROCEDURES.
13. JOHNSON CONTROLS TO PROVIDE REPRESENTATIVE TO TRAIN OWNER'S MAINTENANCE PERSONNEL TO ADJUST, OPERATE, AND MAINTAIN HVAC INSTRUMENTATION AND CONTROLS.

COMMISSIONING OF HVAC

1. THE COMMISSIONING AUTHORITY (CXA) WILL BE CONTRACTED UNDER HCA HEALTHCARE.
2. CONTRACTOR'S RESPONSIBILITIES
    A. EACH CONTRACTOR SHALL ATTEND PROCEDURES MEETING FOR TAB WORK, CERTIFY TAB WORK IS COMPLETE, CERTIFY READINESS, AND CERTIFY COMPLETION OF INSTALLATION, TESTING/VERIFICATION, AND STARTUP.
    B. GENERAL CONTRACTOR SHALL ATTEND TAB VERIFICATION TESTING, CERTIFY TAB WORK IS COMPLETE, AND CERTIFY ALL SUB-CONTRACTORS HAVE COMPLETED THEIR RESPECTIVE RESPONSIBILITIES.
    C. MECHANICAL CONTRACTOR SHALL ATTEND TAB VERIFICATION TESTING, CERTIFY TAB WORK IS COMPLETE, AND CERTIFY PIPING CLEANING AND FLUSHING IS COMPLETE. THE CONTRACTOR SHALL BE RESPONSIBLE FOR THE COMPLETION OF THE PRE-FUNCTIONAL TEST LIST PROVIDED BY THE COMMISSIONING AGENT.
    D. ELECTRICAL CONTRACTOR SHALL ATTEND TAB VERIFICATION TESTING AND, WITH THE MECHANICAL CONTRACTOR, COORDINATE INSTALLATION AND CONNECTIONS BETWEEN AND AMONG ELECTRICAL AND HVAC SYSTEMS, SUBSYSTEMS, AND EQUIPMENT.
    E. JOHNSON CONTROLS SHALL REVIEW WITH CxA CONTROL DESIGNS FOR COMPLIANCE WITH OWNER REQUIREMENTS AND BASIS OF DESIGN. JOHNSON CONTROLS SHALL ALSO SUPPORT THE CXA IN THE COMMISSIONING PROCESS.
    F. TAB CONTRACTOR SHALL REVIEW WITH CXA DEVELOPED TAB PROCEDURES, VERIFY ADEQUATE BALANCING DEVICES HAVE BEEN SPECIFIED TO FACILITATE TAB PROCEDURES, AND PROVIDE CERTIFIED TAB REPORTS. TAB CONTRACTOR SHALL ALSO SUPPORT THE CXA IN THE COMMISSIONING PROCESS.
3. SALAS O'BRIEN WILL PROVIDE APPROVED SUBMITTAL DOCUMENTATION TO THE CXA.
4. CXA WILL DEVELOP AND PROVIDE TEST CHECKLISTS FOR HVAC SYSTEMS, SUBSYSTEMS, AND EQUIPMENT; TEST AND INSPECTION REPORTS; AND CORRECTIVE ACTION DOCUMENTS.
5. ALL CONTRACTORS ARE RESPONSIBLE FOR PERFORMING THE FUNCTIONAL TESTS PRESCRIBED AND OVERSEEN BY THE CXA. PARTICIPATION SHALL INCLUDE THE GENERAL CONTRACTOR, MECHANICAL CONTRACTOR, AND CONTROL CONTRACTOR AT A MINIMUM. FUNCTIONAL TESTS ARE EXPECTED TO LAST TWO WORK DAYS (16 HOURS) WHICH DOES NOT INCLUDE TIME FOR ANY ISSUE RESOLUTION IDENTIFIED AS PART OF THE TESTS.

This sheet of drawings has not been reviewed for code compliance.

TESTING, ADJUSTING, AND BALANCING FOR HVAC

1. EXAMINE THE CONTRACTOR DOCUMENTS TO BECOME FAMILIAR WITH PROJECT REQUIREMENTS AND TO DISCOVER CONDITIONS IN SYSTEMS' DESIGNS THAT MAY PRECLUDE PROPER TAB OF SYSTEMS AND EQUIPMENT.
    A. VERIFY THAT BALANCING DEVICES, SUCH AS TEST PORTS, GAGES COCKS, THERMOMETER WELLS, FLOW-CONTROL DEVICES, BALANCING VALVES AND FITTINGS, AND MANUAL VOLUME DAMPERS, ARE REQUIRED BY THE CONTRACT DOCUMENTS. VERIFY THAT QUANTITIES AND LOCATIONS OF THESE BALANCING DEVICES ARE ACCESSIBLE AND APPROPRIATE FOR EFFECTIVE BALANCING AND FOR EFFICIENT SYSTEM AND EQUIPMENT OPERATION.
2. EXAMINE APPROVED SUBMITTAL DATA OF HVAC SYSTEMS AND EQUIPMENT.
3. EXAMINE DESIGN DATA, INCLUDING HVAC SYSTEM DESCRIPTIONS, STATEMENTS OF DESIGN ASSUMPTIONS FOR ENVIRONMENTAL CONDITIONS AND SYSTEMS' OUTPUT, AND STATEMENTS OF PHILOSOPHIES AND ASSUMPTIONS ABOUT HVAC SYSTEM AND EQUIPMENT CONTROLS.
4. EXAMINE EQUIPMENT PERFORMANCE DATA INCLUDING FAN AND PUMP CURVES.
5. EXAMINE SYSTEM AND EQUIPMENT INSTALLATIONS TO VERIFY THAT THEY ARE COMPLETE AND THAT TESTING, CLEANING, ADJUSTING, AND COMMISSIONING SPECIFIED IN INDIVIDUAL SECTIONS HAVE BEEN PERFORMED.
6. EXAMINE SYSTEM AND EQUIPMENT TEST REPORTS.
7. EXAMINE SYSTEMS FOR FUNCTIONAL DEFICIENCIES THAT CANNOT BE CORRECTED BY ADJUSTING AND BALANCING.
8. EXAMINE HVAC EQUIPMENT TO ENSURE THAT CLEAN FILTERS HAVE BEEN INSTALLED, BEARINGS ARE GREASED, BELTS ARE ALIGNED AND TIGHT, AND EQUIPMENT WITH FUNCTIONING CONTROLS ARE READY FOR OPERATION.
9. EXAMINE STRAINERS FOR CLEAN SCREENS AND PROPER PERFORATIONS.
10. EXAMINE HEAT-TRANSFER COILS FOR CORRECT PIPING CONNECTIONS AND FOR CLEAN AND STRAIGHT FINS.
11. EXAMINE SYSTEM PUMPS TO ENSURE ABSENCE OF ENTRAINED AIR IN THE SUCTION PIPING.
12. EXAMINE EQUIPMENT FOR INSTALLATION AND FOR PROPERLY OPERATING SAFETY INTERLOCKS AND CONTROLS.
13. EXAMINE AUTOMATIC TEMPERATURE CONTROL SYSTEM COMPONENTS TO VERIFY THE FOLLOWING:
    A. DAMPERS ,VALVES, AND OTHER CONTROLLED DEVICES ARE OPERATED BY THE INTENDED CONTROLLER.
    B. DAMPERS AND VALVES ARE IN THE POSITION INDICATED BY THE CONTROLLER.
    C. INTEGRITY OF VALVES AND DAMPERS FOR FREE AND FULL OPERATION AND FOR TIGHTNESS OF FULLY CLOSED AND FULLY OPEN POSITIONS.
    D. AUTOMATIC MODULATING AND SHUTOFF VALVES, INCLUDING TWO-WAY VALVES, ARE PROPERLY CONNECTED.
    E. THERMOSTATS AND HUMIDISTATS ARE LOCATED TO AVOID ADVERSE EFFECTS OF SUNLIGHT, DRAFTS, AND COLD WALLS.
    F. SENSORS ARE LOCATED TO SENSE ONLY THE INTENDED CONDITIONS.
    G. SEQUENCE OF OPERATION FOR CONTROL MODES IS ACCORDING TO THE CONTRACT DOCUMENTS.
    H. CONTROLLER SET POINTS ARE SET AT INDICATED VALUES.
    I. INTERLOCKED SYSTEMS ARE OPERATING.
14. REPORT DEFICIENCIES DISCOVERED BEFORE AND DURING PERFORMANCE OF TAB PROCEDURES. OBSERVE AND RECORD SYSTEM REACTIONS TO CHANGES IN CONDITIONS. RECORD DEFAULT SET POINTS IF DIFFERENT FROM INDICATED VALUES.
15. PREPARE A TAB PLAN THAT INCLUDES STRATEGIES AND STEP-BY-STEP PROCEDURES.
16. COMPLETE SYSTEM READINESS CHECKS AND PREPARE SYSTEM READINESS REPORTS. VERIFY THE FOLLOWING:
    A. PERMANENT ELECTRICAL POWER WIRING IS COMPLETE.
    B. HYDRONIC SYSTEMS ARE FILLED, CLEAN, AND FREE OF AIR.
    C. AUTOMATIC TEMPERATURE-CONTROL SYSTEMS ARE OPERATIONAL.
    D. EQUIPMENT AND DUCT ACCESS DOORS ARE SECURELY CLOSED.
    E. BALANCE, SMOKE, AND FIRE DAMPERS ARE OPEN.
    F. ISOLATING AND BALANCING VALVES ARE OPEN AND CONTROL VALVES ARE OPERATIONAL.
17. TEST, ADJUST, AND BALANCE ALL HUMIDIFIERS.
18. GENERAL PROCEDURES FOR TESTING AND BALANCING
    A. PERFORM TESTING AND BALANCING PROCEDURES ON EACH SYSTEM ACCORDING TO THE PROCEDURES CONTAINED IN AABC'S "NATIONAL STANDARDS FOR TESTING AND BALANCING HEATING, VENTILATING, AND AIR CONDITIONING SYSTEMS" AND THIS SECTION.
    B. MARK EQUIPMENT AND BALANCING DEVICE SETTINGS WITH PAINT OR OTHER SUITABLE, PERMANENT IDENTIFICATION MATERIAL, INCLUDING DAMPER-CONTROL POSITIONS, VALVE POSITION INDICATORS, FAN-SPEED-CONTROL LEVERS, AND SIMILAR CONTROLS AND DEVICES, TO SHOW FINAL SETTINGS.
    C. TAKE AND REPORT TESTING AND BALANCING MEASUREMENTS IN INCH-POUND (IP) UNITS.
19. GENERAL PROCEDURES FOR BALANCING AIR SYSTEMS
    A. PREPARE TEST REPORTS FOR BOTH FANS AND OUTLETS.
    B. PREPARE SCHEMATIC DIAGRAMS OF SYSTEMS' "AS-BUILT" DUCT LAYOUTS.
    C. FOR VARIABLE-AIR-VOLUME SYSTEMS, DEVELOP A PLAN TO SIMULATE DIVERSITY.
    D. DETERMINE THE BEST LOCATIONS IN MAIN AND BRANCH DUCTS FOR ACCURATE DUCT AIRFLOW MEASUREMENTS.
    E. CHECK AIRFLOW PATTERNS FROM THE OUTDOOR-AIR LOUVERS AND DAMPERS AND THE RETURN- AND EXHAUST-AIR DAMPERS THROUGH THE SUPPLY-FAN DISCHARGE AND MIXING DAMPERS.
    F. LOCATE START-STOP AND DISCONNECT SWITCHES, ELECTRICAL INTERLOCKS, AND MOTOR STARTERS.
    G. VERIFY THAT MOTOR STARTERS ARE EQUIPPED WITH PROPERLY SIZED THERMAL PROTECTION.
    H. CHECK DAMPERS FOR PROPER POSITION TO ACHIEVE DESIRED AIRFLOW PATH.
    I. CHECK FOR AIRFLOW BLOCKAGES.
    J. CHECK CONDENSATE DRAINS FOR PROPER CONNECTIONS AND FUNCTIONING.
    K. CHECK FOR PROPER SEALING OF AIR-HANDLING-UNIT COMPONENTS.
20. PROCEDURES FOR PRESSURE-INDEPENDENT, VARIABLE-AIR-VOLUME SYSTEMS:
    A. VERIFY THAT THE SYSTEM STATIC PRESSURE SENSOR IS LOCATED AT LEAST TWO-THIRDS OF THE DISTANCE DOWN THE DUCT FROM THE FAN DISCHARGE.
    B. VERIFY THAT THE SYSTEM IS UNDER STATIC PRESSURE CONTROL.
    C. SELECT THE TERMINAL UNIT THAT IS MOST CRITICAL TO THE SUPPLY-FAN AIRFLOW. MEASURE INLET STATIC PRESSURE AND ADJUST SYSTEM STATIC PRESSURE CONTROL SET POINT SO THE ENTERING STATIC PRESSURE FOR THE CRITICAL TERMINAL UNIT IS NOT LESS THAN THE SUM OF THE TERMINAL-UNIT MANUFACTURER'S RECOMMENDED MINIMUM INLET STATIC PRESSURE PLUS THE STATIC PRESSURE NEEDED TO OVERCOME TERMINAL-UNIT DISCHARGE SYSTEM LOSSES.
    D. CALIBRATE AND BALANCE EACH TERMINAL UNIT FOR MAXIMUM AND MINIMUM DESIGN AIRFLOW AS FOLLOWS: ADJUST CONTROLS SO THAT TERMINAL IS CALLING FOR MAXIMUM AIRFLOW (SOME CONTROLLERS REQUIRE STARTING WITH MINIMUM AIRFLOW, VERIFY CALIBRATION PROCEDURE FOR SPECIFIC PROJECT). MEASURE AIRFLOW AND ADJUST CALIBRATION FACTOR AS REQUIRED FOR DESIGN MAXIMUM AIRFLOW, AND RECORD CALIBRATION FACTOR. ADJUST CONTROLS SO THAT TERMINAL IS CALLING FOR MINIMUM AIRFLOW. MEASURE AIRFLOW AND ADJUST CALIBRATION FACTOR AS REQUIRED FOR DESIGN MINIMUM AIRFLOW, AND RECORD CALIBRATION FACTOR. IF NO MINIMUM CALIBRATION IS AVAILABLE, NOT ANY DEVIATION FROM DESIGN AIRFLOW.
    E. AFTER TERMINALS HAVE BEEN CALIBRATED AND BALANCED, TEST AND ADJUST SYSTEM FOR TOTAL AIRFLOW. ADJUST FANS TO DELIVER TOTAL DESIGN AIRFLOW WITHIN THE MAXIMUM ALLOWABLE FAN SPEED LISTED BY FAN MANUFACTURER. SET OUTSIDE-AIR, RETURN-AIR, AND RELIEF-AIR DAMPERS FOR PROPER POSITION THAT SIMULATES MINIMUM OUTDOOR-AIR CONDITIONS. SET TERMINALS FOR MAXIMUM AIRFLOW. IF SYSTEM DESIGN INCLUDES DIVERSITY, ADJUST TERMINALS FOR MAXIMUM AND MINIMUM AIRFLOW, SO THAT CONNECTED TOTAL MATCHES FAN SELECTION AND SIMULATES ACTUAL LOAD IN THE BUILDING. WHERE DUCT CONDITIONS ALLOW, MEASURE AIRFLOW BY MAIN PITOT-TUBE TRAVERSE. IF NECESSARY, PERFORM MULTIPLE PITOT-TUBE TRAVERSES CLOSE TO THE FAN AND PRIOR TO ANY OUTLETS, TO OBTAIN AIRFLOW. WHERE DUCT CONDITIONS ARE UNSUITABLE FOR PITOT-TUBE TRAVERSE MEASUREMENTS, A COIL TRAVERSE MAY BE ACCEPTABLE.
    F. MEASURE FAN STATIC PRESSURES AS FOLLOWS: MEASURE STATIC PRESSURE DIRECTLY AT THE FAN OUTLET OR THROUGH THE FLEXIBLE CONNECTION. MEASURE STATIC PRESSURE DIRECTLY AT THE FAN INLET OR THROUGH THE FLEXIBLE CONNECTION. MEASURE STATIC PRESSURE ACROSS EACH COMPONENT THAT MAKES UP THE AIR-HANDLING SYSTEM. REPORT ANY ARTIFICIAL LOADING OF FILTERS AT THE TIME STATIC PRESSURES ARE MEASURED.
    G. SET FINAL RETURN AND OUTSIDE AIRFLOW TO THE FAN WHILE OPERATING AT MAXIMUM RETURN AIRFLOW AND MINIMUM OUTDOOR AIRFLOW. BALANCE THE RETURN-AIR DUCTS AND INLETS. VERIFY THAT TERMINAL UNITS ARE MEETING DESIGN AIRFLOW UNDER SYSTEM MAXIMUM FLOW.
    H. RE-MEASURE THE INLET STATIC PRESSURE AT THE MOST CRITICAL TERMINAL UNIT AND ADJUST THE SYSTEM STATIC PRESSURE SET POINT TO THE MOST ENERGY-EFFICIENT SET POINT TO MAINTAIN THE OPTIMUM SYSTEM STATIC PRESSURE. RECORD SET POINT AND GIVE TO CONTROLS CONTRACTOR. RE-MEASURE AND CONFIRM THAT MINIMUM OUTDOOR, RETURN, AND RELIEF AIRFLOWS ARE WITHIN DESIGN. READJUST TO MATCH DESIGN IF NECESSARY. RE-MEASURE AND CONFIRM THAT TOTAL AIRFLOW IS WITHIN DESIGN. RE-MEASURE FINAL FAN OPERATING DATA, SPEED, VOLTS, AMPS, AND STATIC PROFILE. MARK FINAL SETTINGS. TEST SYSTEM IN ECONOMIZER MODE. VERIFY PROPER OPERATION AND ADJUST IF NECESSARY. MEASURE AND RECORD ALL OPERATING DATA. VERIFY TRACKING BETWEEN SUPPLY AND RETURN FANS.
21. PROCEDURES FOR STEAM AND CONDENSATE SYSTEMS
    A. MEASURE AND RECORD PRESSURE UPSTREAM AND DOWNSTREAM OF EACH PIECE OF EQUIPMENT.
    B. CHECK SETTINGS AND OPERATION OF ALL CONTROL VALVES. RECORD FINAL SETTINGS.
    C. CHECK SETTINGS AND OPERATION OF EACH SAFETY VALVE. RECORD SETTINGS.
    D. VERIFY OPERATION OF EACH STEAM TRAP.
22. PROCEDURES FOR HEAT-TRANSFER WATER COILS: MEASURE THE FOLLOWING DATA FOR EACH COIL:
    A. ENTERING- AND LEAVING-WATER TEMPERATURE.
    B. WATER FLOW RATE.
    C. WATER PRESSURE DROP.
    D. DRY-BULB TEMPERATURE OF ENTERING AND LEAVING AIR.
    E. WET-BULB TEMPERATURE OF ENTERING AND LEAVING AIR.
    F. AIRFLOW.
    G. AIR PRESSURE DROP.
23. PROCEDURES FOR TEMPERATURE MEASUREMENTS:
    A. DURING TAB, REPORT THE NEED FOR ADJUSTMENT IN TEMPERATURE REGULATION WITHIN THE AUTOMATIC TEMPERATURE-CONTROL SYSTEM.
    B. MEASURE INDOOR WET- AND DRY-BULB TEMPERATURES EVERY OTHER HOUR FOR A PERIOD OF TWO SUCCESSIVE EIGHT-HOUR DAYS TO PROVE CORRECTNESS OF FINAL TEMPERATURE SETTINGS. MEASURE WHEN THE ZONE IS OCCUPIED.
    C. MEASURE OUTSIDE-AIR, WET- AND DRY-BULB TEMPERATURES.
24. TEMPERATURE-CONTROL VERIFICATION
    A. VERIFY THAT CONTROLLERS ARE CALIBRATED AND COMMISSIONED.
    B. CHECK TRANSMITTER AND CONTROLLER LOCATIONS AND NOTE CONDITIONS THAT WOULD ADVERSELY AFFECT CONTROL FUNCTIONS.
    C. RECORD CONTROLLER SETTINGS AND NOTE VARIANCES BETWEEN SET POINTS AND ACTUAL MEASUREMENTS.
    D. CHECK THE OPERATION OF LIMITING CONTROLLERS (I.E., HIGH- AND LOW-TEMPERATURE CONTROLLERS).
    E. CHECK FREE TRAVEL AND PROPER OPERATION OF CONTROL DEVICES SUCH AS DAMPER AND VALVE OPERATORS.
    F. CHECK THE SEQUENCE OF OPERATION OF CONTROL DEVICES. NOTE DEVICE POSITIONS AND CORRELATE WITH AIRFLOW AND WATER FLOW MEASUREMENTS. NOTE THE SPEED OF RESPONSE TO INPUT CHANGES.
    G. CHECK THE INTERACTION OF ELECTRICALLY OPERATED SWITCH TRANSDUCERS.
    H. CHECK THE INTERACTION OF INTERLOCK AND LOCKOUT SYSTEMS.
    I. RECORD VOLTAGES OF POWER SUPPLY AND CONTROLLER OUTPUT. DETERMINE WHETHER THE SYSTEM OPERATES ON A GROUNDED OR NON-GROUNDED POWER SUPPLY.
    J. NOTE OPERATION OF ELECTRIC ACTUATORS USING SPRING RETURN FOR PROPER FAIL-SAFE OPERATIONS.
25. SET HVAC SYSTEM AIRFLOW AND WATER FLOW RATES WITHIN THE FOLLOWING TOLERANCES:
    A. EXHAUST FANS AND EQUIPMENT WITH FANS: 0 TO PLUS 10 PERCENT OF DESIGN.
    B. PUMPS: 0 TO PLUS 10 PERCENT OF DESIGN.
    C. EQUIPMENT (AHU COILS, CHILLERS, ETC.): 0 TO PLUS 5 PERCENT OF DESIGN.
26. REPORTING
    A. INITIAL CONSTRUCTION-PHASE REPORT: REFER TO EXAMINATION ARTICLES.
    B. STATUS REPORTS: AS WORK PROGRESSES, PREPARE REPORTS TO DESCRIBE COMPLETED PROCEDURES, PROCEDURES IN PROGRESS, AND SCHEDULED PROCEDURES. INCLUDE A LIST OF DEFICIENCIES AND PROBLEMS FOUND IN SYSTEMS BEING TESTING AND BALANCED.
    C. FINAL REPORT: COMPUTER PRINTOUT IN LETTER-QUALITY FONT, ON STANDARD BOND PAPER, IN THREE-RING BINDER, TABULATED AND DIVIDED INTO SECTIONS BY TESTED AND BALANCED SYSTEMS. INCLUDED A CERTIFICATION SHEET IN FRONT OF BINDER SIGNED AND SEALED BY THE CERTIFIED TESTING AND BALANCING ENGINEER. INCLUDE A LIST OF INSTRUMENTS USED FOR PROCEDURES, ALONG WITH PROOF OF CALIBRATION. IN ADDITION TO CERTIFIED FIELD REPORT DATA, INCLUDE PUMP CURVES, FAN CURVES, MANUFACTURERS' TEST DATA, FIELD TEST REPORTS PREPARED BY SYSTEM AND EQUIPMENT INSTALLERS, AND ANY OTHER INFORMATION RELATIVE TO EQUIPMENT PERFORMANCE.
27. ADDITIONAL TESTS:
    A. PRE-BALANCE MEASUREMENTS AS INDICATED ON DRAWINGS.
    B. WITHIN 90 DAYS OF COMPLETING TAB, PERFORM ADDITIONAL TESTING AND BALANCING TO VERIFY THAT BALANCED CONDITIONS ARE BEING MAINTAINED THROUGHOUT AND TO CORRECT UNUSUAL CONDITIONS.
    C. SEASONAL PERIODS: IF INITIAL TAB PROCEDURES WERE NOT PERFORMED DURING NEAR-PEAK SUMMER OR WINTER CONDITIONS, PERFORM ADDITIONAL TESTING, INSPECTING, AND ADJUSTING DURING NEAR-PEAK SUMMER AND WINTER CONDITIONS.

Salas O'Brien
salasobrien.com
Greenwood Village
9250 East Costilla Avenue, Suite 220
Greenwood Village, CO 80112
Registration:

CONFIDENTIAL
THIS DRAWING AND ASSOCIATED DESIGN ELEMENTS ARE CONFIDENTIAL AND THE PROPERTY OF SALAS O'BRIEN, WHICH RETAINS ALL COMMON LAW, COPYRIGHT, STATUTORY AND OTHER RIGHTS THERETO. ANY UNAUTHORIZED USE, REUSE OR REPRODUCTION IS PROHIBITED. UNLESS OTHERWISE AGREED TO BY SALAS O'BRIEN, THIS DRAWING (AS WELL AS ANY COPIES) SHALL BE RETURNED TO SALAS O'BRIEN UPON REQUEST.

PROFESSIONAL SEAL
COLORADO LICENSED MICHAEL P THOMPSON 53150 PROFESSIONAL ENGINEER

ISSUE DATE	DESCRIPTION
10/31/2025	PERMIT

2561-22631-00
THE MEDICAL CENTER OF AURORA

IR AHU-15 Replacement

1501 S. Potomac St,
Aurora, CO 80012

REVISIONS

Δ	DESCRIPTION	DATE

CHECKED BY	DRAWN BY
BH	XW, ZP

SHEET NAME
MECHANICAL SPECIFICATIONS

SHEET NUMBER: M008
REVISION:

Autodesk Docs://061_2561-22631-00_TMCA IR AHU-15_ME_R25/SO_2561-22631-00_TMCA IR AHU-15_ME_R25.rvt
10/31/2025 12:58:52 PM

RSN: 1940718 | PERMIT #2025 2572466

MECHANICAL SPECIFICATIONS

TEMPERATURE CONTROLS

1. THE EXISTING JCI BAS SHALL BE MODIFIED AS REQUIRED TO ACCOMPLISH THE SPECIFIED SEQUENCES OF OPERATIONS.
2. REUSE EXISTING CONTROL PANELS WHEREVER POSSIBLE AND PROVIDE CONTROL EXPANSION MODULES WHERE REQUIRED.
3. VARIABLE NOMENCLATURE SHALL BE IN ACCORDANCE WITH HCA'S PUBLISHED MEP STANDARD (APPENDIX B-2). A COPY OF THE STANDARD CAN BE PROVIDED UPON REQUEST.
4. GRAPHICS SHALL BE IN ACCORDANCE WITH HCA'S PUBLISHED MEP STANDARD (APPENDIX B-8). A COPY OF THE STANDARD CAN BE PROVIDED UPON REQUEST.
5. BAS AND TEMPERATURE CONTROLS CONDUIT SHALL BE SUBJECT TO THE REQUIREMENTS OF THE HCA STANDARDS FOR TELECOMMUNICATIONS CONDUIT. A COPY OF THE HCA STANDARDS CAN BE PROVIDED UPON REQUEST.
6. PROVIDE HILTI SPEED SLEEVES WHEN PENETRATING RATED PARTITIONS WITH BAS OR TEMPERATURE CONTROLS CONDUIT.
7. CREATE OPENINGS AND INSTALL SLEEVES IN CEILINGS, FLOORS, ROOF, AND WALLS REQUIRED FOR THE PROJECT INSTALLATION. CHECK FOR CONCEALED WORK BEFORE DRILLING, PUNCHING, AND CUTTING. PATCH, FLASH, GROUT, SEAL AND REFINISH OPENINGS TO MATCH ADJACENT CONDITION. ALL PENETRATIONS IN FIRE WALLS SHALL HAVE FIRE SEALANT.
8. PRE-CONSTRUCTION SUBMITTALS:
   - A. BAS SUBMITTALS SHALL CONTAIN THE FOLLOWING:
     - a. CONTROL VALVE SCHEDULES INCLUDING FLOW AND ACTUATOR PROPERTIES
     - b. MOTOR OPERATED DAMPER SCHEDULES INCLUDING FLOW AND ACTUATOR PROPERTIES
     - c. SCHEMATIC CONTROL DIAGRAM INDICATING LOCATION OF ALL I/O POINTS IN RELATION TO THE SYSTEM COMPONENTS
     - d. SEQUENCE OF OPERATIONS TO BE PROGRAMMED
     - e. I/O TABLE SHOWING
       - EACH INPUT/OUTPUT AFFECTED BY THE PROJECT
       - THE ASSOCIATED CONTROLLER OR I/O MODULE BEING TIED INTO
       - WHICH I/O TERMINALS ARE BEING USED FOR EACH I/O.
     - f. PLAN DRAWINGS INDICATING:
       - SENSOR LOCATIONS
       - MAJOR EQUIPMENT LOCATIONS
       - CONTROL PANEL LOCATIONS
   - B. A PAPER COPY OF THE SUBMITTAL SHALL BE LOCATED IN THE ASSOCIATED CONTROL PANEL.
9. TESTING & POST-CONSTRUCTION SUBMITTAL:
   - A. VERIFY THE OPERATING PERFORMANCE OF EACH I/O, ALARM, AND SAFETY ASSOCIATED WITH THE PROJECT
   - B. MAKE ADJUSTMENTS TO ALL I/O POINTS THAT ARE OUT OF TOLERANCE.
   - C. SIMULATE CONDITIONS TO DEMONSTRATE PROPER SEQUENCE OF CONTROL OVER A MINIMUM PERIOD OF 24 HOURS USING BAS TRENDS.
   - D. COMPLETELY CHECK OUT, CALIBRATE, AND TEST ALL HARDWARE TO ENSURE THEY COMPLY WITH THE REQUIREMENTS OF THE CONSTRUCTION DOCUMENTS.
   - E. PREPARE AND SUBMIT A REPORT OF THE POST-CONSTRUCTION TESTING. INCLUDE A PICTURE OF THE ASSOCIATED BAS GRAPHICS.
10. TESTING AND BALANCING SUPPORT:
    - A. THE CONTROLS CONTRACTOR SHALL BE AN ACTIVE PARTICIPANT IN THE T&B PROCESS. COORDINATE WITH THE T&B CONTRACTOR & PROVIDE SUPPORT TO THEM AS REQUIRED FOR THE T&B SCOPE.
11. OWNER TRAINING:
    - A. AFTER THE CONTROLS SCOPE HAS BEEN INTEGRATED, PROVIDE A TECHNICIAN TO TRAIN THE OWNER'S REPRESENTATIVES ON THE FOLLOWING:
      - a. BASIC OPERATION OF SYSTEM
      - b. ACCESSING AND READING GRAPHICS, REPORTS, TRENDS, AND ALARMS.
      - c. ADJUSTING AND CHANGING SETPOINTS AND TIME SCHEDULES.
      - d. DESCRIBING PHYSICAL LOCATIONS OF DEVICES.
      - e. RECOGNIZING ERRORS, SAFETIES, ETC.
      - f. TROUBLESHOOTING COMMON ISSUES ASSOCIATED WITH THE SCOPE OF WORK.
12. TRENDING REQUIREMENTS:
    - A. ALL ANALOG BAS I/O POINTS SHALL BE CONTINUOUSLY MONITORED IN 15 MINUTE INTERVALS.
    - B. ALL DIGITAL OR STATIC BUILDING AUTOMATION I/O POINTS CAN BE TRENDED UPON CHANGE OF VALUE.
    - C. ALL CONTROLLING VARIABLES SHALL BE TRENDED AT EITHER 15 MINUTE INTERVALS OR CHANGE OF VALUE, WHICHEVER BEST REPRESENTS THE REAL CONDITIONS.
    - D. TRENDS SHALL BE RETAINED AT A MINIMUM, FOR 48 HOURS IN THE LOCAL CONTROLLER AND FURTHER RETAINED IN THE MAIN SERVER TO BUILD A 5-YEAR DATABASE OF TREND DATA FOR EACH ITEM.
    - E. TRENDS SHALL BE AVAILABLE IN .XLSX FORMAT (TABLE) OR .PDF FORMAT (REPORT FORM)
    - F. EVERY MONTH THE TREND DATA SHALL BE ARCHIVED TO A SEPARATE FILE AT THE OPERATOR WORKSTATION THAT IS NOT OVERWRITTEN.
13. MATERIALS SHALL HAVE THE FOLLOWING PROPERTIES:
    - A. ALL CONTROLS CONDUIT SHALL BE BLUE IN COLOR. REFER TO ELECTRICAL SPECIFICATIONS FOR FURTHER WIRING REQUIREMENTS.
    - B. ALL HARDWARE ASSOCIATED WITH BAS POINTS SHALL BE LABELED. LABEL SHALL MATCH THE SENSOR NOMENCLATURE ON THE BAS SUBMITTAL.
    - C. TEMPERATURE SENSORS:
      - a. TYPE: 1000 OHM PLATINUM RTD
      - b. SENSOR LENGTH: 4, 6 OR 8 INCHES AS REQUIRED BY APPLICATION.
      - c. RANGE: 0-200°F MINIMUM
      - d. ACCURACY: ±0.6°F AT 32°F
      - e. PROVIDE WITH STAINLESS STEEL THERMOWELL
    - D. 2-WAY CONTROL VALVE
      - a. TYPE: BUTTERFLY VALVE
      - b. BODY: DUCTILE OR CAST IRON
      - c. PRESSURE RATING: 125 PSIG AT 125°F MINIMUM
      - d. CONNECTIONS: FULLY LUGGED
      - e. ALLOWABLE DISC MATERIALS: BRONZE, ALUMINUM BRONZE, EPDM COATED DUCTILE IRON
      - f. ALLOWABLE SEAT/SEAL MATERIALS: PTFE, EPDM
      - g. SIZE: LINE SIZE
      - h. CHARACTERIZATION: NONE
      - i. ACTUATORS:
        - 24V FAIL IN PLACE
        - REFER TO DRAWINGS FOR MODULATING/TWO POSITION
    - E. RELAYS:
      - a. MECHANICAL LIFE: AT LEAST 10 MILLION CYCLES.
      - b. ELECTRICAL LIFE: AT LEAST 100,000 CYCLES AT RATED LOAD.
      - c. PICKUP TIME: 15 MS OR LESS
      - d. DROPOUT TIME: 10 MS OR LESS.
      - e. PULL-IN VOLTAGE: 85% OF RATED VOLTAGE
      - f. DROPOUT VOLTAGE: 50% OF NOMINAL RATED VOLTAGE:
      - g. POWER CONSUMPTION: 2VA OR LESS
      - h. AMBIENT OPERATING TEMPERATURES: -40°F TO 115°F
    - F. LIQUID DIFFERENTIAL PRESSURE SENSORS:
      - a. RANGE: APPROXIMATELY 2X THE SETPOINT
      - b. ACCURACY: ±0.25% FULL SCALE
      - c. HYSTERESIS ±0.1% FULL SCALE
      - d. MAXIMUM WORKING PRESSURE: 250 PSIG
      - e. TEMPERATURE LIMITS: 0-175°F
      - f. PROVIDE BLEED SCREWS FOR AIR PURGING
      - g. PROVIDE TRANSMITTER WITH 3-VALVE MANIFOLD
14. COPPER TUBING (FOR SENSORS):
    - A. SEAMLESS COPPER, DRAWN TEMPERED IN ACCORDANCE WITH ASTM B75/B75M
    - B. DIAMETER NOT LESS THAN NOMINAL 3/8"
    - C. WALL THICKNESS NOT LESS THAN 0.030"
    - D. COPPER TUBING CONNECTORS AND FITTINGS: SOLDERED

This sheet of drawings has not been reviewed for code compliance.

Salas O'Brien
salasobrien.com
Greenwood Village
9250 East Costilla Avenue, Suite 220
Greenwood Village, CO 80112
Registration:

CONFIDENTIAL
THIS DRAWING AND ASSOCIATED DESIGN ELEMENTS ARE CONFIDENTIAL AND THE PROPERTY OF SALAS O'BRIEN, WHICH RETAINS ALL COMMON LAW, COPYRIGHT, STATUTORY AND OTHER RIGHTS THERETO. COPYRIGHT NOTICE ON THESE DRAWINGS IS NOT LIMITATION. UNLESS OTHERWISE AGREED TO BY SALAS O'BRIEN, THIS DRAWING (AS WELL AS ANY COPIES) SHALL BE RETURNED TO SALAS O'BRIEN UPON REQUEST.

PROFESSIONAL SEAL

COLORADO LICENSED MICHAEL P THOMPSON 53150 PROFESSIONAL ENGINEER

ISSUE DATE	DESCRIPTION
10/31/2025	PERMIT

2561-22631-00
THE MEDICAL CENTER OF AURORA

IR AHU-15 Replacement

1501 S. Potomac St,
Aurora, CO 80012

REVISIONS

Δ	DESCRIPTION	DATE

CHECKED BY: BH
DRAWN BY: XW, ZP

SHEET NAME: MECHANICAL SPECIFICATIONS

SHEET NUMBER: M009
REVISION:

Autodesk Docs://061_2561-22631-00_TMCA IR AHU-15_ME_R25/SO_2561-22631-00_TMCA IR AHU-15_ME_R25.rvt
10/31/2025 12:58:52 PM

RSN: 1940718 | PERMIT #2025 2572466

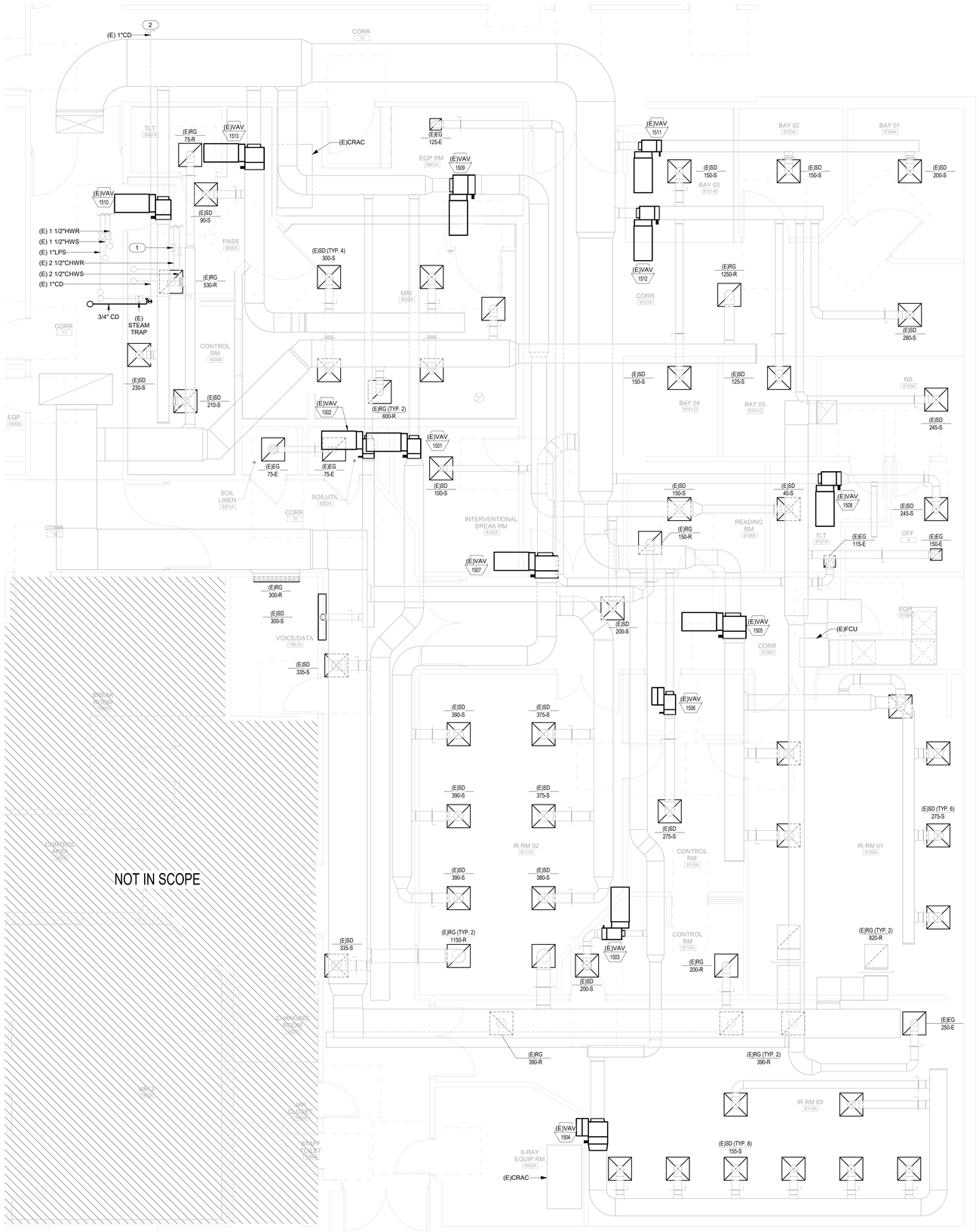

1 LEVEL 01 MECHANICAL PLAN

1/4" = 1'-0"

GENERAL NOTES

1. DRAWINGS ARE DIAGRAMMATICAL IN NATURE. CONTRACTOR IS RESPONSIBLE FOR EXISTING SITE SURVEY, COORDINATION OF UTILITIES SHUTDOWN, AND COORDINATION WITH OTHER TRADES.
2. FIELD ORGANIZE AND INSTALL ALL EQUIPMENT, PIPING, CONDUIT, ETC. FOR MAXIMUM CLEARANCE AND MAINTENANCE ACCESSIBILITY. PLAN OFFSETS AND REQUIRED TO AVOID CONFLICTS WITH PIPING AND/OR STRUCTURE.
3. REBALANCE AHU-15 SUPPLY, RETURN, AND EXHAUST AIRFLOWS AS SHOWN ON PLAN.
4. EXISTING GRDs AND VAVs TO REMAIN. SHOWN AS BOLD FOR REBALANCING PURPOSES ONLY.

MECHANICAL KEYNOTES

1. MECHANICAL CONTRACTOR TO CONFIRM SHUTOFF VALVE LOCATIONS.
2. EXISTING CONDENSATE PIPING TO REMAIN. PIPING EXTENDS TO CONNECT TO CONDENSATE RETURN MAIN ABOVE CEILING.

Code violations that are found during inspections are required to be corrected. Permit issuance does not grant approval of a code violation.

City of Aurora Building Division
Reviewed for Code Compliance
Approved as Noted: **Regan B**
Date: **Nov 13, 2025**
2021 INTERNATIONAL CODES & **2023** NEC

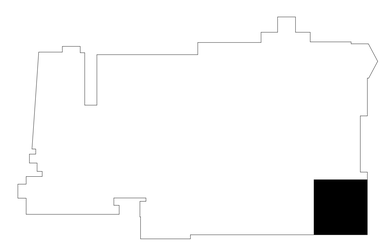

Salas O'Brien
salasobrien.com
Greenwood Village
9250 East Costilla Avenue, Suite 220
Greenwood Village, CO 80112

Registration:

CONFIDENTIAL
THIS DRAWING AND ASSOCIATED DESIGN ELEMENTS ARE CONFIDENTIAL AND THE PROPERTY OF SALAS O'BRIEN, WHICH RETAINS ALL COMMON LAW, COPYRIGHT, STATUTORY AND OTHER RIGHTS THERETO. UNAUTHORIZED USE, DISCLOSURE OR REPRODUCTION IS PROHIBITED, UNLESS OTHERWISE AGREED TO BY SALAS O'BRIEN. THIS DRAWING (AS WELL AS ANY COPIES) SHALL BE RETURNED TO SALAS O'BRIEN UPON REQUEST.

PROFESSIONAL SEAL

COLORADO LICENSED MICHAEL P THOMPSON 53150 PROFESSIONAL ENGINEER

ISSUE DATE	DESCRIPTION
10/31/2025	PERMIT

2561-22631-00
THE MEDICAL CENTER OF AURORA

IR AHU-15 Replacement

1501 S. Potomac St,
Aurora, CO 80012

REVISIONS

Δ	DESCRIPTION	DATE

CHECKED BY	DRAWN BY
BH	XW, ZP

SHEET NAME

LEVEL 01 MECHANICAL VENTLATION PLAN

SHEET NUMBER	REVISION
M101	

Autodesk Docs://001_2561-22631-00_TMCA IR AHU-15_ME_R25/SO_2561-22631-00_TMCA IR AHU-15_ME_R25.rvt
10/31/2025 12:58:53 PM

RSN: 1940718 | PERMIT #2025 2572466

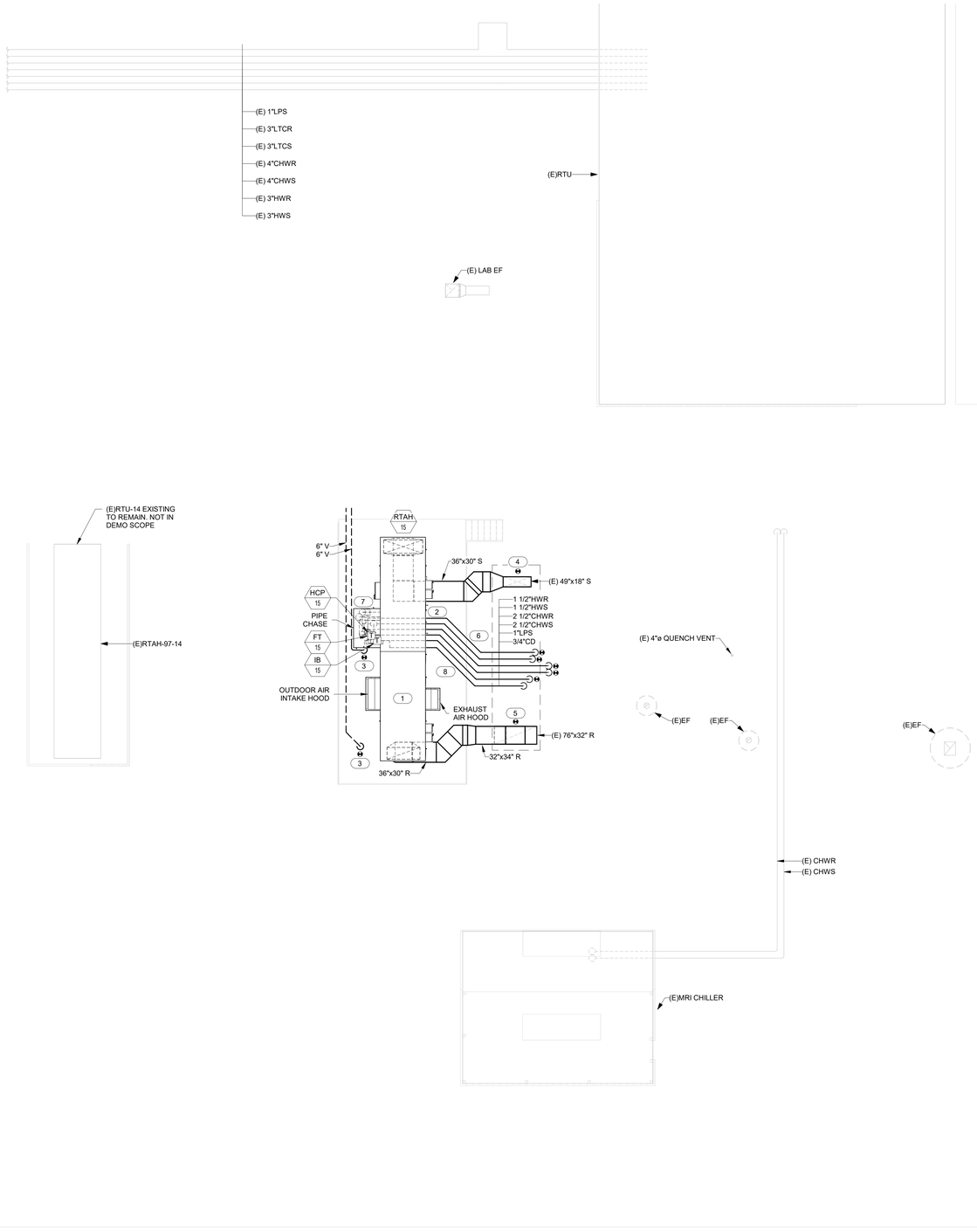

1 ROOF MECHANICAL PLAN

1/8" = 1'-0"

GENERAL NOTES

1. DRAWINGS ARE DIAGRAMMATICAL IN NATURE. CONTRACTOR IS RESPONSIBLE FOR EXISTING SITE SURVEY, COORDINATION OF UTILITIES SHUTDOWN, AND COORDINATION WITH OTHER TRADES.
2. FIELD ORGANIZE AND INSTALL ALL EQUIPMENT, PIPING, CONDUIT, ETC. FOR MAXIMUM CLEARANCE AND MAINTENANCE ACCESSIBILITY. PLAN OFFSETS AND REQUIRED TO AVOID CONFLICTS WITH PIPING AND/OR STRUCTURE.

MECHANICAL KEYNOTES

1. PROVIDE AIR HANDLING UNIT, RTAH-15, ON TOP OF FIELD INSTALLED PLATFORM, PER MFR'S INSTRUCTIONS. REMOVE STEEL SUPPORT WHERE PIPING AND DUCTWORK PENETRATIONS ARE TO BE LOCATED. INSTALL AHU IN LOCATION TO MAINTAIN 4 FT CLEARANCE BETWEEN SCREEN WALL. CONTRACTOR TO PROVIDE FIELD-INSTALLED SHEET METAL TO COVER ALL INSTANCES WHERE SPRAY FOAM INSULATION IS EXPOSE, COMPLETE. COORDINATE INSTALLATION WITH OTHER TRADES.
2. EXTEND PIPING TO UNDERSIDE OF AHU PIPING CHASE, ELBOW UP, AND PENETRATE INTO CABINET. SEAL ALL PENETRATIONS WITH APPROPRIATE INSULATING MATERIALS TO MATCH. ALL NEW COIL AND HUMIDIFIER VALVES AND ACCESSORIES TO BE LOCATED WITHIN CHASE, INCLUDING BUT NOT LIMITED TO, HCP-15.
3. EXTEND 6" PLUMBING VENTS ALONG UNDERSIDE OF PLATFORM AND TERMINATE IN A LOCATION TO MAINTAIN 25 FEET FROM ANY OUTSIDE INTAKE, PER IMC. INSTALL HORIZONTAL VENT PIPING WITH A SLOPE, PER IPC. PROVIDE SUPPORTS AS NECESSARY TO SUPPORT FROM UNDERSIDE OF PLATFORM.
4. EXTEND 30/30 SA DUCTWORK ALONG ROOF AND CONNECT TO EXT'G AHU SA DROP. CONTRACTOR TO MODIFY EXISTING VERTICAL DUCTWORK AS NECESSARY TO CONNECT. PROVIDE SUPPORTS FROM PLATFORM WHERE ABLE AND NON-PENETRATING SUPPORTS FROM ROOF WHERE PLATFORM IS UNAVAILABLE. REFER TO EXTERIOR DUCTWORK DETAIL AND DUCT CONSTRUCTION DETAIL ON SHEET M001.
5. EXTEND 36/30 RA DUCTWORK ALONG ROOF, PROVIDE CUSTOM TRANSITION, AND CONNECT TO EXT'G AHU RA DROP. CONTRACTOR TO MODIFY EXISTING VERTICAL DUCTWORK AS NECESSARY TO CONNECT. PROVIDE SUPPORTS FROM PLATFORM WHERE ABLE AND NON-PENETRATING SUPPORTS FROM ROOF WHERE PLATFORM IS UNAVAILABLE. REFER TO EXTERIOR DUCTWORK DETAIL AND DUCT CONSTRUCTION DETAIL ON SHEET M001.
6. EXTEND MECHANICAL PIPING TO EXT'G AHU PIPING CONNECTIONS AND CONNECT. PROVIDE NON-PENETRATING SUPPORTS FROM ROOF WHERE PLATFORM IS UNAVAILABLE.
7. EXTEND 3/4 CONDENSATE DRAIN PIPING FROM HUMIDIFIER AND COOLING COIL TRAPS DN, CONNECT WITHIN PIPING CHASE NEAR ROOF, PENETRATE PIPING VESTIBULE, AND TERMINATE TO ROOF.
8. 3/4" CD TO MAINTAIN SLOPE OF 1/4" PER FOOT TO GRAVITY DRAIN.

City of Aurora Building Division
Reviewed for Code Compliance
Approved as Noted: Regan B
Date: Nov 13, 2025
2021 INTERNATIONAL CODES & 2023 NEC

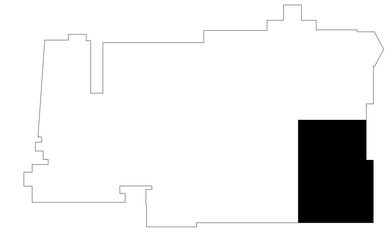

Salas O'Brien
salasobrien.com
Greenwood Village
9250 East Costilla Avenue, Suite 220
Greenwood Village, CO 80112
Registration:

CONFIDENTIAL
THIS DRAWING AND ASSOCIATED DESIGN ELEMENTS ARE CONFIDENTIAL AND THE PROPERTY OF SALAS O'BRIEN, WHICH RETAINS ALL COMMON LAW, COPYRIGHT, STATUTORY AND OTHER RIGHTS THERETO. UNAUTHORIZED USE, REPRODUCTION OR DISTRIBUTION IS PROHIBITED. UNLESS OTHERWISE AGREED TO BY SALAS O'BRIEN, THIS DRAWING (AS WELL AS ANY COPIES) SHALL BE RETURNED TO SALAS O'BRIEN UPON REQUEST.

PROFESSIONAL SEAL

COLORADO LICENSED
MICHAEL P THOMPSON
53150
PROFESSIONAL ENGINEER

ISSUE DATE	DESCRIPTION
10/31/2025	PERMIT

2561-22631-00
THE MEDICAL CENTER OF AURORA

IR AHU-15 Replacement

1501 S. Potomac St,
Aurora, CO 80012

REVISIONS

Δ	DESCRIPTION	DATE

CHECKED BY BH
DRAWN BY XW, ZP

SHEET NAME

ROOF MECHANICAL VENTLATION PLAN

SHEET NUMBER M201
REVISION

Autodesk Docs://051_2561-22631-00_TMCA IR AHU-15_ME_R25/SO_2561-22631-00_TMCA IR AHU-15_ME_R25.rvt
10/31/2025 12:58:54 PM

RSN: 1940718 | PERMIT #2025 2572466

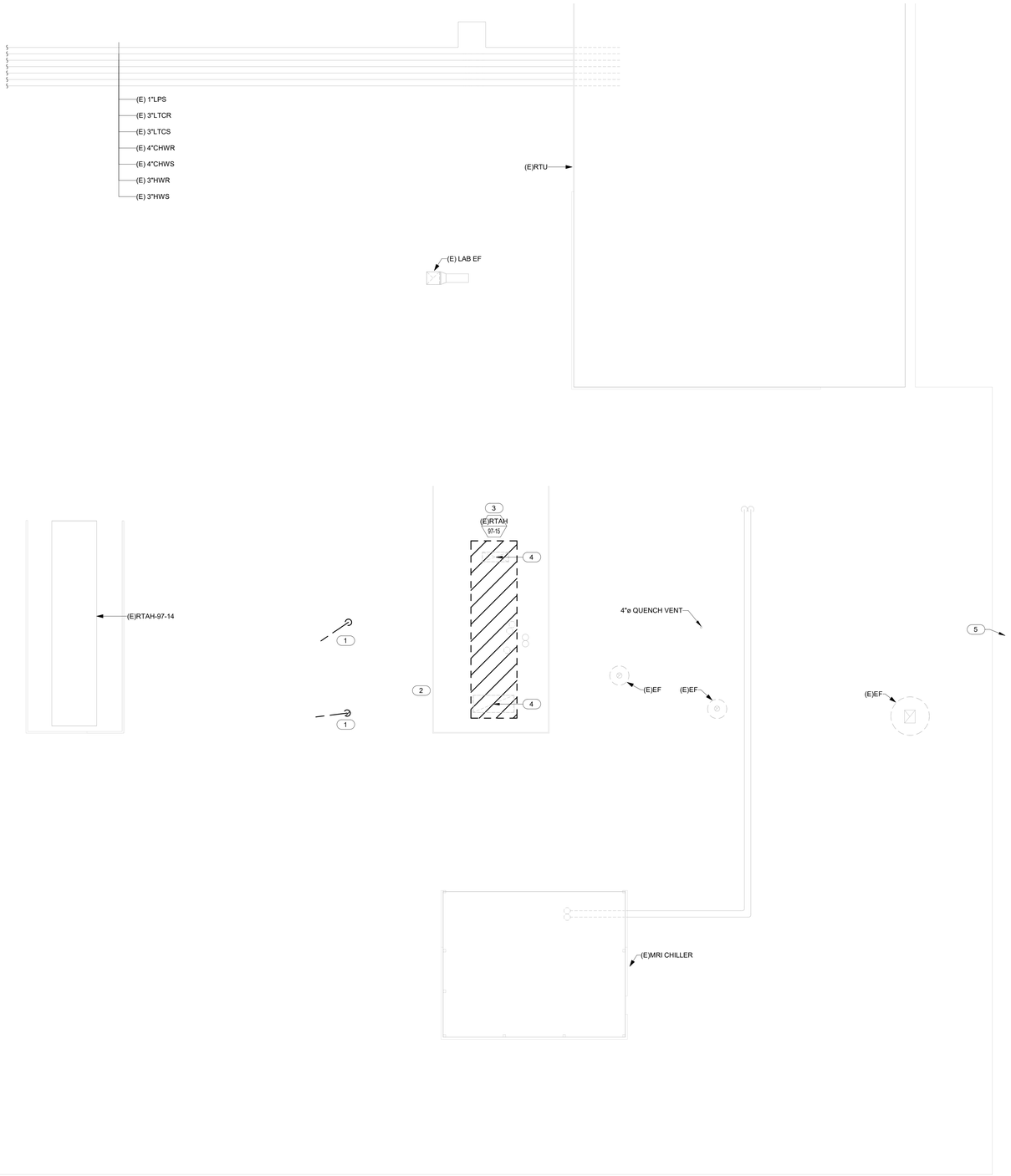

1 ROOF MECHANICAL DEMOLITION PLAN

1/8" = 1'-0"

This sheet of drawings has not been reviewed for code compliance.

GENERAL NOTES

1. DRAWINGS ARE DIAGRAMMATICAL IN NATURE. CONTRACTOR IS RESPONSIBLE FOR EXISTING SITE SURVEY, COORDINATION OF UTILITIES SHUTDOWN, AND COORDINATION WITH OTHER TRADES.
2. FIELD ORGANIZE AND INSTALL ALL EQUIPMENT, PIPING, CONDUIT, ETC. FOR MAXIMUM CLEARANCE AND MAINTENANCE ACCESSIBILITY. PLAN OFFSETS AND REQUIRED TO AVOID CONFLICTS WITH PIPING AND/OR STRUCTURE.

(#) MECHANICAL KEYNOTES

1. REMOVE 6" PLUMBING VENTS BACK THRU ELBOW. PROVIDE TEMPORARY COVER FOR PIPE OPENING TO PROTECT FROM DEBRIS, MOISTURE, ETC.
2. REMOVE EXISTING SCREEN WALL OF (E)RTAH-97-15. COORDINATE PHASING OF REMOVAL WITH ARCHITECTURAL PLANS.
3. REMOVE EXISTING AIR HANDLING UNIT, (E)RTAH-97-15, COMPLETE. AHU REMOVAL TO BE PHASED - NEW AHU TO BE INSTALLED AND DUCTWORK/PIPING TO BE ROUGHED-IN BEFORE UNIT REMOVAL. EXISTING ROOF CURB TO REMAIN, PROVIDE ROOF CURB INSULATED COVER, PER 2021 IECC. COORDINATION INSTALLATION WITH ARCHITECT. UNIT REMOVAL TO BE PLANNED SO THAT THERE IS MINIMUM SHUTDOWN TIMES FOR ASSOCIATED SYSTEMS. CONTRACTOR TO COORDINATE REMOVAL PHASING WITH OTHER TRADES AND OWNER.
4. CONTRACTOR TO VERIFY DUCT SIZES THROUGH ROOF.
5. THE PROPOSED LOCATION TO ANCHOR CRANE IS THE PARKING LOT TO THE SOUTH. REFER TO PROPOSED ANCHOR LOCATION OF CRANE DETAIL.

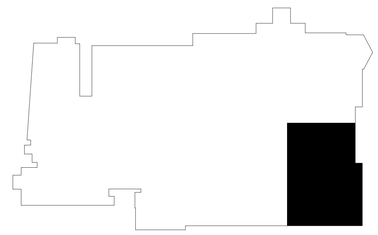

Salas O'Brien
salasobrien.com
Greenwood Village
9250 East Costilla Avenue, Suite 220
Greenwood Village, CO 80112
Registration:

CONFIDENTIAL
THIS DRAWING AND ASSOCIATED DESIGN ELEMENTS ARE CONFIDENTIAL AND THE PROPERTY OF SALAS O'BRIEN, WHICH RETAINS ALL COMMON LAW, COPYRIGHT, STATUTORY AND OTHER RIGHTS THERETO. UNAUTHORIZED USE, REPRODUCTION OR DISTRIBUTION IS PROHIBITED. UNLESS OTHERWISE AGREED TO BY SALAS O'BRIEN, THIS DRAWING (AS WELL AS ANY COPIES) SHALL BE RETURNED TO SALAS O'BRIEN UPON REQUEST.

PROFESSIONAL SEAL

COLORADO LICENSED MICHAEL P THOMPSON 53150 PROFESSIONAL ENGINEER

ISSUE DATE	DESCRIPTION
10/31/2025	PERMIT

2561-22631-00

THE MEDICAL CENTER OF AURORA

IR AHU-15 Replacement

1501 S. Potomac St,
Aurora, CO 80012

REVISIONS

Δ	DESCRIPTION	DATE

CHECKED BY BH

DRAWN BY XW, ZP

SHEET NAME

ROOF MECHANICAL DEMOLITION PLAN

SHEET NUMBER MD201

REVISION

Autodesk Docs://051_2561-22631-00_TMCA IR AHU-15_ME_R25/SO_2561-22631-00_TMCA IR AHU-15_ME_R25.rvt
10/31/2025 12:58:54 PM

RSN: 1940718 | PERMIT #2025 2572466

GENERAL ELECTRICAL SYMBOLS

	CONDUIT RUN CONCEALED IN CEILING OR WALL
	CONDUIT RUN CONCEALED IN OR BELOW FLOOR
	CONDUIT RUN EXPOSED ON CEILING OR WALL
	ARROWHEAD DENOTES HOMERUN TO PANELBOARD. SLASH LINES INDICATE QUANTITY OF WIRE; NEUTRAL WIRE SHOWN AS A LONG LINE, PHASE WIRES AND SWITCH LEGS SHOWN AS SHORT LINES, AND GROUND WIRE SHOWN AS A LONG LINE WITH A DOT.
X	CONDUIT, WHERE "X" IS THE TYPE OR FUNCTION OF CONDUIT.

"C" INDICATES CLOCK
"CO" INDICATES CONDUIT ONLY
"CTV" INDICATES CCTV
"D" INDICATES DATA
"FA" INDICATES FIRE ALARM
"I" INDICATES INTERCOM
"LV" INDICATES LOW VOLTAGE
"NC" INDICATES NURSE CALLS
"S" INDICATES SOUND
"T" INDICATES TELEPHONE
"TVA" INDICATES TELEVISION ANTENNA
"TVC" INDICATES CABLE TELEVISION

	CONDUIT STUBBED UP
	CONDUIT STUBBED DOWN
	FLEXIBLE CONDUIT
XX	CONDUIT TERMINATION: "CS" INDICATES CAP AND STAKE; "GB" INDICATES GROUNDING BUSHING; "IB" INDICATES INSULATING BUSHING; "TB" INDICATES TERMINAL BUSHING
	CONDUIT SEAL
	MULTI-OUTLET ASSEMBLY
W W	WIREWAY
CT CT	CABLE TRAY
B B	BUSWAY (BUSDUCT)
CTB	CABLE TAP BOX
	UNDERGROUND DUCTBANK
	UNDERGROUND DIRECT BURIAL CABLE
	UNDERFLOOR DUCT SYSTEM: —— INDICATES POWER DUCT; – – – INDICATES TELEPHONE DUCT; - - - - INDICATES SYSTEM DUCT
	VARIOUS SYMBOLS IDENTIFY LOCATION OF DIFFERENT TYPES OF OUTLETS OR CONNECTIONS TO UNDERFLOOR DUCT SYSTEM.
MH	MANHOLE
HH	HANDHOLE
PB	PULL BOX
J	JUNCTION BOX- EXPOSED OR IN CEILING
	JUNCTION BOX - WALL MOUNTED
	JUNCTION BOX FOR HAND DRYER CONNECTION - WALL MOUNTED
	JUNCTION BOX WITH FLEXIBLE CONDUIT AND FINAL CONNECTION TO EQUIPMENT.
PDC 13	EQUIPMENT IDENTIFICATION TAG

LIGHTING SYMBOLS

	2' X 4' LIGHTING FIXTURE.
F1 1a	2' X 2' LIGHTING FIXTURE.
F1 1a	1' X 4' LIGHTING FIXTURE.
F1 1a	LINEAR LIGHTING FIXTURE- LENGTH AS INDICATED.
T F1 1a	WALL MOUNTED LINEAR LIGHTING FIXTURE- LENGTH AS INDICATED.
F1 1a F1 1a	PENDANT, SURFACE, OR RECESSED LIGHTING FIXTURE.
F1 1a F1 1a	PENDANT, SURFACE, OR RECESSED LIGHTING FIXTURE
F1 E1	2' X 4' LIGHTING FIXTURE CONNECTED TO EMERGENCY CIRCUIT.
F1 E1	LINEAR LIGHTING FIXTURE CONNECTED TO EMERGENCY CIRCUIT.
F1 E1 F1 E1	PENDANT, SURFACE, OR RECESSED LIGHTING FIXTURE CONNECTED TO EMERGENCY CIRCUIT.

LIGHTING FIXTURES: "F1" INDICATES LIGHTING FIXTURE TYPE. REFER TO LIGHTING FIXTURE SCHEDULE FOR DESCRIPTION AND MOUNTING. "1" INDICATES CIRCUIT NUMBER "a" INDICATES SWITCH CONTROL. SHADING OF LIGHTING FIXTURE OR "E" INDICATES LIGHTING FIXTURE CONNECTED TO EMERGENCY CIRCUIT.

F1 E2	BATTERY PACK, EMERGENCY LIGHTING UNIT
	REMOTE HEAD CONNECTED TO BATTERY PACK.
	LOW VOLTAGE TRACK LIGHTING - FIXTURE NUMBERS AS INDICATED.
	TRACK LIGHTING
	DOCK LIGHT WITH ARTICULATED ARM.
	LIGHTING STANDARD - SINGLE FIXTURE, POLE MOUNTED.
	LIGHTING STANDARD - DOUBLE FIXTURE, POLE MOUNTED.

RESCUE ASSISTANCE SYMBOLS

RACP	AREA OF RESCUE ASSISTANCE CONTROL PANEL
RA	AREA OF RESCUE ASSISTANCE CALL BUTTON
XX XX	AREA OF RESCUE ASSISTANCE ILLUMINATED SIGN

LIGHTING SYMBOLS

NEW
#3 E3
#21 E5
NEW
#3N E3
#21N E5
EXISTING
#3E E3
#21E E5

"#X" INDICATES INSCRIPTION, ARROWS, AND SINGLE OR DOUBLE FACED, AS SHOWN BELOW. SHADED QUADRANTS INDICATES DIRECTION OF LIGHTED FACES.

"#1" FIRE ESCAPE
"#2A" STAIRS
"#3" EXIT
"#4" FIRE ESCAPE
"#5A" STAIRS
"#6" EXIT
"#7" FIRE ESCAPE
"#8A" STAIRS
"#9" EXIT
"#10" FIRE ESCAPE
"#11A" STAIRS
"#12" EXIT
"#13" EXIT - RECESSED
"#14" TRIANGLE
"#15" ELEVATOR
"#16" FIRE ESCAPE
"#17A" STAIRS
"#18" EXIT
"#19" FIRE ESCAPE
"#20A" STAIRS
"#21" EXIT
"#22" FIRE ESCAPE
"#23A" STAIRS
"#24" EXIT

3W XXa

LIGHT SWITCH, SINGLE POLE UNLESS NOTED OTHERWISE:

"a" INDICATES LIGHTS CONTROLLED
"D" INDICATES DIMMER SWITCH
"EP" INDICATES EXPLOSION PROOF
"K" INDICATES KEY OPERATED
"LV" INDICATES LOW VOLTAGE
"MC" INDICATES MOMENTARY CONTACT
"P" INDICATES PILOT LIGHT
"TS" INDICATES TIMER SWITCH
"XX" INDICATES CIRCUIT NUMBER
"WP" INDICATES WEATHERPROOF
"2P" INDICATES 2 POLE
"3P" INDICATES THREE POLE
"3W" INDICATES THREE-WAY
"4W" INDICATES FOUR-WAY

LRC	LIGHTING RELAY CABINET
TC	TIME CLOCK
DS	INDOOR DAYLIGHT SENSOR
PC	OUTDOOR PHOTOCELL
OS XX	CEILING OR WALL MOUNTED VACANCY SENSOR (MANUAL ON-AUTO OFF)
OS XX	CEILING OR WALL MOUNTED OCCUPANCY SENSOR (AUTO ON-AUTO OFF)

POWER SYMBOLS

WALL	FLOOR BOX	POKE-THROUGH	
			DUPLEX RECEPTACLE
			DOUBLE DUPLEX RECEPTACLE
			DUPLEX RECEPTACLE - SPLIT WIRED
			SINGLE RECEPTACLE
			COMBINATION DUPLEX RECEPTACLE TELEPHONE/ DATA SYSTEMS OUTLET
			COMBINATION DOUBLE DUPLEX RECEPTACLE TELEPHONE/ DATA SYSTEMS OUTLET
			SPECIAL RECEPTACLE - NEMA TYPE AS INDICATED
P	P	P	JUNCTION BOX WITH FLEXIBLE CONDUIT AND FINAL EQUIPMENT OR FURNITURE SYSTEM POWER CONNECTION

WP XX

ADJACENT LETTERS IN THE SYMBOLS ABOVE INDICATE THE FOLLOWING:
"C" INDICATES RECEPTACLE HAS AUTOMATIC CONTROLS
"E" INDICATES RECEPTACLE FED BY EMERGENCY CIRCUIT
"EP" INDICATES RECEPTACLE IS EXPLOSION PROOF
"EWC" INDICATES RECEPTACLE SERVES ELECTRIC WATER COOLER
"GFI" INDICATES RECEPTACLE HAS GROUND FAULT CIRCUIT INTERRUPTER
"IG" INDICATES RECEPTACLE HAS ISOLATED GROUND
"SP" INDICATES SURGE PROTECTIVE RECEPTACLE
"TR" INDICATES TAMPER RESISTANT
"WP" INDICATES RECEPTACLE HAS WATERPROOF COVER
"XX" INDICATES RECEPTACLE CIRCUIT NUMBER

	DUPLEX RECEPTACLE MOUNTED ABOVE COUNTERTOP OR DUPLEX MOUNTED WITHIN 12" BELOW COUNTERTOP TO SERVE COUNTER
WP/GFI XX	OUTDOOR PEDESTAL RECEPTACLE
USB	DUPLEX RECEPTACLE WITH (2) USB PORTS
USB	OUTLET WITH (4) USB PORTS
	CLOCK OUTLET RECEPTACLE
	CLOCK OUTLET AND CLOCK FOR INTEGRATED CLOCK SYSTEM.
	PUSHBUTTON STATION WITH ONE BUTTON
	PUSHBUTTON STATION WITH TWO BUTTONS
	PUSHBUTTON STATION WITH TWO BUTTONS AND A PILOT LIGHT
	PUSHBUTTON STATION WITH THREE BUTTONS
KR	KEY RESET CONTROL STATION
S/L	STOP-LOCK PUSHBUTTON STATION
EPO	EMERGENCY POWER OFF MUSHROOM PUSHBUTTON CONTROL STATION

2P XX

MANUAL MOTOR CONTROL
"M" INDICATES LOCKOUT MOTOR SWITCH
"K" INDICATES KEY OPERATED
"P" INDICATES PILOT LIGHT
"TH" INDICATES THERMAL OVERLOAD PROTECTION
"XX" INDICATES CIRCUIT NUMBER
"2P" INDICATES 2 POLE SWITCH
"3P" INDICATES 3 POLE SWITCH

LO	LOCK OUT SWITCH
	AIR TERMINAL (LIGHTNING ROD)
	GROUND ROD GROUND WELL

GW INDICATES GROUNDWELL
GTS INDICATES GROUND TEST STATION

1W FA 2W FA TEL XX LO

ELEVATOR CAB CONNECTIONS

POWER SYMBOLS

	SWITCHGEAR, SWITCHBOARD OR MOTOR CONTROL CENTER, DASHED LINES INDICATE FUTURE SECTIONS, ARROW INDICATES FRONT
	SURFACE MOUNTED DISTRIBUTION PANELBOARD
	SURFACE MOUNTED BRANCH CIRCUIT PANELBOARD
	RECESSED MOUNTED BRANCH CIRCUIT PANELBOARD
1-HDP-1	SWITCHBOARDS, DISTRIBUTION PANELBOARDS, MOTOR CONTROL CENTERS, PANELBOARDS, CABINETS, AND RELATED EQUIPMENT

INDICATES LEVEL ON WHICH PANEL IS LOCATED - G, B, 1, 2, ETC.
INDICATES TYPE, CODED AS FOLLOWS:
INDICATES PANEL NUMBER

1 HDP 1

"C" CRITICAL OR COMPUTER
"D" DISTRIBUTION
"E" EMERGENCY
"H" 480/277V, OR 480V
"ISP" ISOLATION
"K" KITCHEN
"L" LIGHTING
"L" 208/120V, OR 208V
"MCC" MOTOR CONTROL CENTER
"P" POWER
"Q" EQUIPMENT
"R" RECEPTACLE
"S" STANDBY
"SWBD" SWITCHBOARD
"XR" X-RAY

D	DAMPER MOTOR
M	MOTOR - RATED AS INDICATED
	ELECTRIC DUCT HEATER
	ELECTRIC BASEBOARD HEATER
WH	ELECTRIC WATER HEATER
	UNIT HEATER OR FAN POWERED BOX
	ELECTRIC UNIT HEATER OR FAN POWERED BOX
	UNIT VENTILATOR OR CABINET UNIT HEATER
	FAN COIL UNIT
A CB	CIRCUIT BREAKER IN ENCLOSURE, "A" INDICATES AMPERE RATING OF BREAKER
AS	NON-FUSED DISCONNECT SWITCH, "AS" INDICATES AMPERE RATING OF SWITCH
AS/AF	FUSED DISCONNECT SWITCH, "AS" INDICATES AMPERE RATING OF SWITCH AND "AF" INDICATES AMPERE RATING OF FUSE
	MAGNETIC MOTOR STARTER - NEMA SIZE AS INDICATED
AT CB	COMBINATION MOTOR STARTER AND CIRCUIT BREAKER "AT" INDICATES AMPERE RATING OF BREAKER
AS	COMBINATION MOTOR STARTER AND NON-FUSED DISCONNECT, "AS" INDICATES AMPERE RATING OF SWITCH
AS/AF	COMBINATION MOTOR STARTER AND FUSED DISCONNECT, "AS" INDICATES AMPERE RATING OF SWITCH AND "AF" INDICATES AMPERE RATING OF FUSE
A C	MECHANICALLY HELD CONTACTOR, "A" INDICATES AMPERE RATING OF CONTACTOR
T	TRANSFORMER

SINGLE LINE DIAGRAM SYMBOLS

	CABLE LUGS
CT	CURRENT TRANSFORMER
PT	POTENTIAL TRANSFORMER
CPT	CONTROL POWER TRANSFORMER
	SWITCH
	FUSE
	GROUND FAULT SENSOR
	GROUNDING ELECTRODE CONDUCTOR
	REMOVABLE LINK
	PROVISIONS FOR FUTURE EXPANSION
	CIRCUIT BREAKER
	CABLE SUPPORTS IN ENCLOSURE
	PANELBOARD
	SWITCHBOARD OR MOTOR CONTROL CENTER AS INDICATED
	TRANSFORMER WITH FLEXIBLE CONDUIT AND PAD
K	KEY LOCK
M	UTILITY METER
CM	CUSTOMER METER
SPD	SURGE PROTECTION DEVICE
GFR	GROUND FAULT RELAY
TEST	GROUND FAULT TEST PANEL
ST	SHUNT TRIP

TECHNOLOGY SYMBOLS

CM	MICROPROCESSOR BASED CIRCUIT MONITOR
B	BUZZER
CCTV	CAMERA
I I	INTERCOM, WALL OR CEILING MOUNTED
S S	SPEAKER, WALL OR CEILING MOUNTED
VC	VOLUME CONTROL
CR	CARD READER
ES	ELECTRIC STRIKE
DC	DOOR CONTACT
MS	MOTION SENSOR
KP	ALARM KEYPAD
MTB	MEDIA TERMINATION BOX

WALL	FLOOR BOX	POKE-THROUGH	
			TELEPHONE OUTLET
			DUPLEX TELEPHONE OUTLET
			DATA SYSTEMS OUTLET
			DUPLEX DATA SYSTEMS OUTLET
			COMBINATION TELEPHONE/ DATA SYSTEMS OUTLET

T T/D D

JUNCTION BOX WITH FLEXIBLE CONDUIT AND FINAL EQUIPMENT OR FURNITURE SYSTEM CONNECTION. SUBSCRIPTS INDICATE THE FOLLOWING:
"T" - TELEPHONE
"D" - DATA SYSTEMS
"T/D" - COMBINATION TELEPHONE/ DATA SYSTEMS

FIRE ALARM SYMBOLS

S	FIRE ALARM MANUAL PULL STATION
L	FIRE ALARM HORN (SINGLE PROJECTOR) WITH FLASHING LIGHT
L	FIRE ALARM HORN (DOUBLE PROJECTOR) WITH FLASHING LIGHT
SD	SMOKE DETECTOR
D	HEAT DETECTOR
DD	DUCT SMOKE DETECTOR
SS	SINGLE STATION SMOKE DETECTOR
SC	SINGLE STATION COMBINATION AUTOMATIC SMOKE AND CARBON MONOXIDE DETECTOR
CO	CARBON MONOXIDE DETECTOR
RA	REMOTE INDICATOR LIGHT FOR SMOKE DETECTOR
RA	REMOTE INDICATOR LIGHT FOR SMOKE DETECTOR
RA TS	REMOTE INDICATOR LIGHT WITH TEST SWITCH FOR DUCT SMOKE DETECTOR
S	VOICE SPEAKER
SV	VOICE SPEAKER WITH VISUAL ALARM
T	VOICE COMMUNICATION TELEPHONE
MD	MAGNETIC DOORHOLDER
EOL	END OF LINE DEVICE
WFS	WATER FLOW SWITCH
VSS	VALVE SUPERVISION SWITCH
APS	AIR PRESSURE SWITCH
FACP	FIRE ALARM CONTROL PANEL
FAAP	FIRE ALARM ANNUNCIATOR PANEL
VCP	VOICE COMMUNICATION CONTROL PANEL
ECP	ELEVATOR STATUS/ CONTROL PANEL
A	AUDIBLE GENERAL ALARM
AV	AUDIBLE GENERAL ALARM WITH VISUAL STROBE
V	VISUAL STROBE
	CONNECTION FOR DOOR UNLOCKING UNDER ALARM CONDITIONS

ABBREVIATIONS

NOTE: ABBREVIATIONS ARE ALPHABETICALLY LISTED BY DESCRIPTION.

ABBREV.	DESCRIPTION
AFF	ABOVE FINISHED FLOOR
ACL	ACROSS THE LINE
ALM	ALARM
AC	ALTERNATING CURRENT
A	AMPERE
AMP	AMPERE
AIC	AMPERES INTERRUPTING CAPACITY
AL	ALUMINUM
ANN	ANNUNCIATOR
ATS	AUTOMATIC TRANSFER SWITCH
BR	BRANCH
BRKR	BREAKER
BGB	BUILDING GROUND BOX
CAB	CABINET
CATV	CABLE TELEVISION
C.B.	CIRCUIT BREAKER
CCT	CIRCUIT
CCTV	CLOSED CIRCUIT TELEVISION
CLO	CLOSET
COAX	COAXIAL
C.U.	COEFFICIENT OF UTILIZATION
COMED	COMMONWEALTH EDISON COMPANY
C	CONDUIT
CONN	CONNECTION
CONV	CONVENIENCE
CU	COPPER
CUH	CABINET UNIT HEATER
CT	CURRENT TRANSFORMER
DC	DIRECT CURRENT
DS	DISCONNECT SWITCH
DPDT	DOUBLE POLE DOUBLE THROW
DPST	DOUBLE POLE SINGLE THROW
DO	DRAWOUT
DT	DUSTTIGHT
ELEC	ELECTRIC
EWC	ELECTRIC WATER COOLER
EWH	ELECTRIC WATER HEATER
EM	EMERGENCY
EMT	ELECTRIC METALLIC TUBING
EQ	EQUIPMENT
EUH	ELECTRIC UNIT HEATER
EX	EXISTING
EP	EXPLOSION PROOF
FPB	FAN POWERED BOX
FA	FIRE ALARM
FDC	FIRE DEPARTMENT CONNECTION
FB	FLOORBOX
FLUOR	FLUORESCENT
FMC	FLEXIBLE METALLIC CONDUIT
F	FUSE
F.S.	FUSED SWITCH
GEN	GENERATOR
GRD	GROUND
GFI	GROUND FAULT INTERRUPTER
GHW	GALVANIZED HEAVYWALL STEEL CONDUIT
HP	HORSE POWER
HV	HIGH VOLTAGE
HZ	HERTZ (CYCLES/SECOND)
INC	INCANDESCENT
IC	INTERRUPTING CAPACITY
IMC	INTERMEDIATE GRADE CONDUIT
JB	JUNCTION BOX
KW	KILOWATT
KWH	KILOWATT-HOUR

ABBREV.	DESCRIPTION
KVA	KILOVOLT-AMPERE
KO	KNOCKOUT
LTG	LIGHTING
LV	LOW VOLTAGE
MH	MANHOLE
MFR	MANUFACTURER
MTR	MOTOR
MCC	MOTOR CONTROL CENTER
MTD	MOUNTED
NEC	NATIONAL ELECTRICAL CODE
NEUT	NEUTRAL
NC	NORMALLY CLOSED
NO	NORMALLY OPENED
NIC	NOT IN CONTRACT
NTS	NOT TO SCALE
PNL	PANEL
PH	PHASE
PT	POTENTIAL TRANSFORMER
PWR	POWER
PRI	PRIMARY
PROT.	PROTECTION OR PROTECTIVE
PA	PUBLIC ADDRESS
PB	PULL BOX
RT	RAINTIGHT
RECP	RECEPTACLE
RC	REMOTE CONTROL
R	RESISTANCE
REL	RELOCATE
SEC	SECONDARY
SC	SHORT CIRCUIT
SP	SINGLE POLE
SPST	SINGLE POLE SINGLE THROW
SPDT	SINGLE POLE DOUBLE THROW
SPKR	SPEAKER
SPEC	SPECIFICATION
SS	STAINLESS STEEL
S	SWITCH
SWBD	SWITCHBOARD
SWGR	SWITCHGEAR
SYM	SYMMETRICAL
SYS	SYSTEM
TC	TERMINAL CABINET
TEL	TELEPHONE
TEL.CL.	TELEPHONE CLOSET
TTC	TELEPHONE TERMINAL CABINET
TV	TELEVISION
TERM.	TERMINAL
TX	TRANSFORMER
T	TRIP
TL	TWIST LOCK
UL	UNDERWRITER'S LABORATORIES
UNG	UNGROUNDED
UH	UNIT HEATER
UNO	UNLESS NOTED OTHERWISE
VP	VAPORPROOF
VT	VAPORTIGHT
V	VOLT
VA	VOLT-AMPERE
WT	WATERTIGHT
W	WATT
WP	WEATHERPROOF
XR	EXISTING TO BE REMOVED
XRL	EXISTING TO BE RELOCATED
XRW	EXISTING TO BE REWIRED

MOUNTING HEIGHTS

MOUNTING HEIGHTS OF ELECTRICAL ITEMS SHALL BE AS LISTED BELOW ABOVE FINISHED FLOOR TO CENTERLINE, UNLESS NOTED OTHERWISE:

A. FIRE ALARM VISUAL DEVICES	80"
B. FIRE ALARM AUDIO VISUAL DEVICES	80"
C. INDIVIDUAL DISCONNECTS AND STARTERS	60"
D. GROUPED DISCONNECTS AND STARTERS	> 12" < 72"
E. PANELBOARD OVERCURRENT DEVICES	> 12" < 72"
F. GROUPED UTILITY REVENUE METERS	> 30"
G. FIRE ALARM PULL STATIONS	48"

REFER TO ARCHITECTURAL DRAWINGS FOR MOUNTING HEIGHTS OF RECEPTACLES, TELE/DATA DEVICES, AND TOGGLE SWITCHES, UNLESS NOTE OTHERWISE.

This sheet of drawings has not been reviewed for code compliance.

Code violations that are found during inspection are required to be corrected. Permit issuance does not grant approval of a code violation.

CODE REFERENCE

ELECTRICAL INSTALLATION SHALL COMPLY WITH THE FOLLOWING CODES:

A. NATIONAL ELECTRICAL CODE 2023	NEC
B. INTERNATIONAL BUILDING CODE 2021	IBC
C. INTERNATIONAL ENERGY CONSERVATION CODE 2021	IECC
D. INTERNATIONAL FIRE CODE 2021	IFC
E. 2022 DENVER AMENDMENTS TO THE 2021 I-CODE	

SHEET INDEX

E000 - ELECTRICAL SYMBOLS, ABBREVIATIONS, & NOTES
E001 - ELECTRICAL SPECIFICATIONS
E002 - ELECTRICAL ONE LINE DIAGRAM & SCHEDULES
ED201 - ROOF ELECTRICAL POWER DEMOLITION PLANS
E101 - LEVEL 01 ELECTRICAL POWER PLANS
E201 - ROOF ELECTRICAL POWER PLANS

RSN: 1940718
Permit #: 25-2572466-LT

Salas O'Brien
salasobrien.com
Greenwood Village
9250 East Costilla Avenue, Suite 220
Greenwood Village, CO 80112

Registration:

CONFIDENTIAL
THIS DRAWING AND ASSOCIATED DESIGN ELEMENTS ARE CONFIDENTIAL AND THE PROPERTY OF SALAS O'BRIEN, WHICH RETAINS ALL COMMON LAW, COPYRIGHT, STATUTORY AND OTHER RIGHTS THERETO. ANY USE, DISCLOSURE, REPRODUCTION OR DISTRIBUTION IS PROHIBITED, UNLESS OTHERWISE AGREED TO BY SALAS O'BRIEN. THIS DRAWING (AS WELL AS ANY COPIES) SHALL BE RETURNED TO SALAS O'BRIEN UPON REQUEST.

PROFESSIONAL SEAL

COLORADO LICENSED MICHAEL P THOMPSON 53150 PROFESSIONAL ENGINEER

ISSUE DATE	DESCRIPTION
10/31/2025	PERMIT

2561-22631-00
THE MEDICAL CENTER OF AURORA

IR AHU-15 Replacement

1501 S. Potomac St,
Aurora, CO 80012

REVISIONS

Δ	DESCRIPTION	DATE

CHECKED BY: CS/MT
DRAWN BY: JD

SHEET NAME

ELECTRICAL SYMBOLS , ABBREVIATIONS & NOTES

SHEET NUMBER: E000
REVISION:

10/30/2025 11:15:44 AM Autodesk Docs://061_2561-22631-00_TMCA IR AHU-15_ME_R25/ISO_2561-22631-00_TMCA IR AHU-15_ME_R25.rvt

This sheet of drawings has not been reviewed for code compliance.

DIVISION 16000 - ELECTRICAL

1. GENERAL

A. Requirements:

1) Products and execution shall be provided for a complete and fully operational electrical system throughout the extent of the project, in conformance with applicable codes, laws, ordinances and agency standards of governing bodies having jurisdiction, and in strict accordance with the contract documents, and building standards.

2) Products, including equipment, devices, fixtures, and materials shall be new unless noted otherwise, UL listed, and bear appropriate label.

3) Execution, including preparation, installation, starting, and testing shall be performed by skilled trades personnel, in compliance with the associated manufacturers recommendations, and coordinated with the other construction trades.

B. Applicable Codes:

1)	National Electrical Code	NEC
2)	International Building Code	IBC
3)	International Energy Conservation Code	IECC
4)	International Fire Code	IFC

C. Applicable Laws and Agency Standards:

1)	American National Standards Institute	ANSI
2)	American Society for Testing and Materials	ASTM
3)	Americans with Disabilities Act	ADA
4)	Electrical Testing Laboratories	ETL
5)	Electronic/Telecommunications Industries Association	EIA/TIA
6)	Institute of Electrical and Electronics Engineers	IEEE
7)	Insulated Cable Engineers Association	ICEA
8)	National Electrical Manufacturers Association	NEMA
9)	National Fire Protection Association	NFPA
10)	Underwriters' Laboratories	UL

D. Approvals:

1) Emergency and Exit Lighting Documents shall be prepared and submitted to the Local Fire Department for their approval of system layout, circuiting, and fixture type. Approved drawings shall be submitted for review prior to construction.

2) Fire Alarm and Life Safety Documents shall be prepared and submitted to the Local Fire Department for their approval of system expansion, layout, circuiting, equipment and device type. The base building fire alarm and life safety system manufacturer/installer shall be retained to produce or update the building fire alarm and life safety documents, and to make final connections and alterations to the existing system. Approved drawings shall be submitted for review prior to construction.

3) Other systems requiring specific approval.

E. Submittals:

1) Product Data shall be prepared and submitted for review prior to construction for the following products: supports, fire proof fittings, wire, fuses, circuit breakers, receptacles, toggle switches, disconnect switches, motor starters, contactors, controls, fire alarm devices, and life safety devices..

2) Shop Drawings shall be prepared and submitted for review prior to construction for the following products: fire alarm equipment, and life safety equipment.

3) Test Results shall be prepared and submitted prior to project completion for cable insulation, grounding system, emergency system, fire alarm system, and life safety systems in accordance with authorities having jurisdiction, and applicable codes and agency standards.

4) Manufacturers Instructions shall be prepared and submitted prior to construction including installation manuals with application conditions and limitations for electrical apparatus use, storage, handling, protection, examination, preparation, installation, and starting.

5) Project Record Documents shall be prepared using AutoCAD or equivalent CAD package. Project Record Documents shall be submitted on reproducible media prior to project completion for electrical systems. Record actual location of equipment, devices, fixtures, etc. Record actual routing of overhead feeders. Record actual routing of feeders below slab.

6) Maintenance Data shall be prepared and submitted prior to project completion for electrical apparatus including operation manuals and maintenance manuals.

F. Electrical Power System Studies:

1) Obtain existing power study from owner and update as required to reflect project conditions.

G. Coordination:

1) Electrical Engineer: Notify the Engineer of any conflicting design information or any design intentions which are not readily interpreted from the contract documents prior to any product selection or execution of work. Notify the Engineer of any products which are damaged, unsuitable, incompatible, or non-compliant with any applicable codes or ordinances of any governing bodies having lawful jurisdiction.

2) Architect: Coordinate construction of the electrical system with the Architect. Final locations and mounting heights of electrical equipment, fire alarm equipment, receptacles, switches, communications devices, fire alarm devices, lighting fixtures, etc. shall be as directed by the Architect.

3) Construction Trades: Coordinate work with other construction trades.

4) Building Management: Meet on site with the building engineer to become familiar with building standards. Normal building working hours shall be recognized. After-hours work or temporary services shall be with prior written approval from building management. Enclose construction area from other areas to prevent transmission of dust, dirt and noise into other existing tenant areas. Product and waste transfer shall be coordinated with building management for scheduling of the elevators, deliveries, and waste removal.

5) Existing Building Systems: Review building standards with the building engineer. Perform a site visit to verify the existing site conditions. Costs associated with unforeseen conditions as result of not performing a site visit shall not be an entitlement for an increase to the contract. Construction shall be performed without interruption to the building power, communications, security, fire alarm and life safety systems, or interference to common areas, corridors, exits or existing tenants. Where any construction would interfere with the daily operations of the building or other tenants, after-hours work or temporary services shall be provided at no increase to the contract.

H. Warrantee and Guarantee

1) Provide warrantee and manufacturers certificate for each product, minimum of one year or longer as specified, from the date of occupancy. Repair and/or replace any equipment, devices, fixtures, materials, etc. with defect as required at no increase to the contract.

2) Provide guarantee of installation for a period of one year from the date of occupancy. Repair and/or reinstall any work with defect as required at no increase to the contract. Provide guarantee of rework for a period of one year from the completion of repair or reinstallation.

3) Damage caused to finishes, surfaces, ceiling tiles, equipment, etc. shall be repaired and/or replaced to match the pre-existing condition at no increase to the contract.

I. Pay fees and other charges incidental to the electrical work and obtain and pay for required liability and casualty insurance, permits, licenses, inspections, taxes, etc.

J. Construction shall be done during regular working hours and days, unless otherwise specified. Work required to be performed during overtime hours or days shall be as indicated.

K. Allow for 2 man-hours of training to the Owners staff for the operation of the electrical systems.

L. Substitutions are not acceptable.

2. PRODUCTS

A. Cabinets, enclosures and access panels shall be code gauge steel with baked enamel finish and flangeless hinges and fasteners. Equipment bases shall be 3 inch high concrete, steel braced and reinforced with 1/4 inch chamfer, and shall extend a minimum of 2 inches around base of equipment. Vibration isolation shall be spring elements in suspended rods and isolation pads below equipment, electrical connections shall be flexible conduit.

B. Conduits shall be hot-dipped galvanized or electro-galvanized steel, minimum size shall be 3/4 inch, except power branch circuits may be 1/2 inch (unless noted otherwise) and flexible connections to recessed lighting fixtures which may be 3/8 inch. Flexible steel conduit shall be galvanized steel, with UL listed liquid tight jacket as required, for final connections to motors, recessed lighting fixtures, and life safety devices. Supports, including channels, angles, rods, and fasteners shall be hot-dipped galvanized steel. Manufacturer shall be AFC, Allied, Anamet, Electri-Flex, O-Z/Gedney, Republic, or Wheatland.

C. Conduit fittings shall be steel; die cast fittings of pot metal are not acceptable. Electrical metallic tubing (EMT) fittings shall be compression type with insulated throats; steel set screw fittings are acceptable. Intermediate metal conduit (IMC) and heavy wall conduit (HWG) fittings shall be of threaded joints; set screw and compression fittings are not acceptable. Manufacturer shall be Appleton, Crouse Hinds, OZ/GGedney, Raco, Steel City, or T&B.

D. HCF-MC cable is acceptable for branch circuit wiring to feed new devices in existing walls. MC cable shall be terminated within 24" of leaving the wall cavity. MC cable is not acceptable where not permitted by code, for feeders, or to feed mechanical equipment.

E. Outlet boxes for all toggle switches, receptacles, communications devices, fire alarm devices, and life safety devices shall include plaster rings, device plates, and cover plates where required. Provide boxes suitable for plenum, wet, or hazardous locations as required. Device cover plates shall be plastic or stainless steel as selected by the Architect. Multi-gang outlet boxes shall include suitable one-piece device cover plate. Outlets located on opposite sides of a partition shall be staggered by 12 inches, minimum. Manufacturer shall be Appleton, Raco, or Steel City.

F. Wire shall be 600 Volt insulated copper, minimum size shall be No.12 AWG, wire sizes No.8 AWG and larger shall be stranded. Manufacturer shall be Cerro, Encore Wire, General Cable, Okonite, or SouthWire.

G. Cable supports shall be appropriate for the size of conduit and type of wire and cables. Cable lubricant shall be less than six percent solid residue after drying and shall not contain any waxes, greases, silicones, or glycol oils.

H. Individual motor starters shall include two sets of normally open contacts, one set of normally closed contacts, three overload relays, individually fused control transformer, hand-off-auto selector switch for automatic start, and pilot light(s) as required. Combination starter disconnects shall include circuit breakers. Contactors shall be NEMA type, with replaceable coil and contact tips. Manufacturer shall be Eaton, Siemens, or Square D.

I. Local disconnect switches for electrically operated equipment shall be heavy duty within enclosure suitable for the location. Fusible disconnect switches 800 Amps and larger shall be bolted pressure, load-break type. Fusible and non-fusible disconnect switches 600 Amps and smaller shall be quick-make, quick-break type. Manufacturer shall be Eaton, General Electric, Siemens, or Square D.

J. Overcurrent and short circuit protection within fusible switches shall be Class L current limiting time delay fuses for switches rated 800 Amps and larger, and Class RK-1 current limiting time delay fuses for switches rated 600 Amps and smaller. Manufacturer shall be Bussmann, Mersen, or Littelfuse.

K. Provide a separate green ground wire for each branch circuit and feeder.

L. Receptacles shall be duplex NEMA 5-20R, back and side wired, specification grade, unless noted otherwise. Special receptacle configurations, duplex isolated ground receptacles, duplex ground fault interrupter receptacles, and tamper resistant receptacles shall be as required or as indicated on the contract documents. General receptacle color shall be ivory, critical receptacle color shall be red unless specified otherwise, verify color with Architect. Manufacturer shall be Bryant, Hubbell, Leviton, or Legrand.

M. Toggle switches shall be single pole 20 Amp, 120-277 Volt, back and side wired, specification grade, unless noted otherwise. Special switches, including 3-way, pilot light and momentary contact, shall be as required or as indicated on the contract documents. Color shall be ivory, critical color shall be red, unless specified otherwise, verify color with Architect. Manufacturer shall be Bryant, Hubbell, Leviton, or Legrand.

N. Lighting contactors shall be enclosed and mechanically held, and shall include all required control modules, timeclocks, and remote photocells. Main contactors for panelboard feeders shall match the panel ratings. Multiple pole contactors for branch circuits shall be rated at 20 Amps, or more, as required for the specific load type. Manufacturer shall be ASCO 920 & 917 or Zenith MVP & MMC

O. Dimmers shall be rated as required for the wattage and specific load type. Manufacturer shall be Wattstopper, Lutron, Legrand, Hubbell, or Leviton.

P. Lighting fixtures shall be UL Listed and include all appropriate accessories, mounting frame and trim for ceiling type. LED fixtures shall be high efficacy and energy efficient complete with LED light engines and constant current drivers. Fluorescent fixtures shall include rapid-start standard-output electronic ballasts with ninety percent (90%) ballast factor and total harmonic distortion of (10%) or less, type or appropriate compact type lamps. Lighting fixtures shall include coordinated air handling capability, plenum rating, damp label, wet label, and shall be explosion proof where required. Lighting fixtures recessed within grid type ceilings shall include securing clips as required by the local authority. Fixture manufacturer shall be as indicated; Electronic ballast manufacturer shall be Advance, Motorola, or MagneTek with minimum 3 year warrantee; Lamp manufacturer shall Osram Sylvania, General Electric, or Phillips.

Q. New fire alarm devices provided within existing systems shall match existing device manufacturer and type. Strobes shall meet ADA guidelines for the application and shall rated 75cd, except in sleeping areas which shall be rated 110cd. Strobes rated 15/75cd with 75cd on axis are not acceptable except in small conference rooms. Existing fire alarm devices shall be extended as required. Existing fire alarm equipment shall be expanded as required with any additional components for proper operation of new devices on existing equipment.

3. EXECUTION

A. Penetrations and channels in floors and walls shall be via cutting and coring as required for the size of product, only in accordance with the Architect and Engineer recommendations, and as scheduled with the building management. Patch and fill sleeves, inserts, penetrations, and channels with appropriate code approved fire safing or filling to match or restore the original fire rating of the construction.

B. Install 3 inch concrete pad below floor mounted equipment including distribution panelboards, transformers, etc.

C. Make final connections to vibrating equipment, fixtures, and devices with flexible metal conduit or liquid tight flexible metal conduit as required. Extend ground wire through flexible connections.

D. Install conduit, fittings, supports, etc. in accordance with codes, standards, and manufacturers recommendations. The voltages identified in the following schedules are line-to-line or line-to-neutral. Interior concealed locations are those locations which are above ceilings, within walls, within floor slabs, and within dedicated electrical rooms. Conduit installation shall be as follows unless noted otherwise:

Voltage Location	0V thru 50V	Above 50V thru 250V	Above 250V thru 600V	Above 600V
Interior Concealed	EMT Concealed	EMT	<2"EMT >2 1/2"IMC	HWG
Interior Exposed	EMT	≤2"EMT ≥2 1/2" IMC	IMC	HWG
Exterior and Hazardous Locations	EMT	IMC	HWG	HWG

E. Installations within air handling spaces, including plenum ceilings and built up air handling systems shall be approved for plenum installation and shall be in strict accordance with all applicable codes.

F. Install pull boxes, junction boxes, and outlet boxes in accordance with codes, standards, and manufacturers recommendations. Boxes shall include accessible covers, shall be fabricated of heavy gage galvanized steel, and shall be sized with code to adequately facilitate pulling and connecting the quantity of wires, cables, and feeders contained. Conduit terminations shall be made with bushings and locknuts. Supports for conduits and boxes shall be suspended directly to the building structural components and in no case shall they be attached to suspended ceiling grid, ductwork, or piping components.

G. Install feeders and branch circuit wiring in accordance with codes, standards, and manufacturers recommendations. Provide neutral sized at 200% or (2) neutral conductors where serving panels with 200% rated neutral bus, coordinate installation with panel manufacturers lug provisions. Install normal power, emergency power, fire alarm, and life safety systems within continuous metal raceways. Install concealed security and communications wiring within continuous metal raceways. Separate each system into independent raceways. Provide cable supports as required. Terminate cables per code and manufacturers recommendations. Provide (2) hole lugs for cables 250 kcmil and larger. Power wiring insulation shall be as follows unless noted otherwise:

Wire Location	300 kcmil and smaller	350 kcmil and larger	Environmental Conditions
Interior Locations	THHN/THWN	XHHW	dry
Exterior Locations	THHN/THWN THHN/THWN	XHHW XHHW-2	damp wet

H. Install electrical distribution equipment and devices, including metering, motor starters, local disconnect switches, overcurrent protection, main contactors, receptacles, etc. in accordance with codes, standards, and manufacturers recommendations.

I. Install grounding systems in accordance with codes, standards, and manufacturers recommendations. Communications system shall include ground lug and AWG No. 6 which shall connect to the electrical service equipment ground bus. Grounding conductor between computer room raised floor pedestals, computer room structural steel, and computer room equipment shall be AWG No. 6. Grounding loop around computer room perimeter pedestals shall be AWG No. 2 which shall connect to the electrical service equipment ground bus. Grounding conductors shall be secured to computer room raised floor pedestals via Burndy GP series clamps.

J. Install lighting and associated controls, including fixtures, ballasts, lamps, toggle switches, slide dimmers, dimming equipment, lighting contactors, etc in accordance with codes, standards, and manufacturers recommendations.

K. Install single and multiple device cover plates as required. Extend existing devices to finished surface as required.

L. Install fire alarm and other life safety systems in accordance with codes, standards, and manufacturers recommendations.

M. Install inscription plates and identification markings for products and wiring including the same inscriptions where indicated on the contract documents. Install plastic laminate nameplates on enclosures for each device within metering equipment, distribution panelboards, branch panelboards, motor starters, disconnect switches, transformers, and contactors. Nameplates shall be white with black core, 1-1/4 inches by 3 inches minimum, with 3/16 inch lettering, secured to equipment with two machine screws. Prepare and install type-written panel directory within each branch panel. Device plates shall be engraved for toggle switches and other devices whose function is not readily apparent. Markers shall be self-sticking for each wire and cable at terminations and at each accessible point in equipment and raceway.

N. Clean electrical apparatus prior to completion of construction. Keep work areas clean at all times.

O. Alterations and Demolition of existing systems shall be as follows:

1) Provide all alterations and demolition of the existing electrical installation as required, including any incidental materials to execute all removal, rerouting, relocation, and any other modifications for proper accommodation of all new construction as indicated on the contract documents. All alterations and demolition shall be as indicated on the contract documents or as required, including any modifications not specifically identified on any contract documents but required to complete all new construction.

2) Provide all modifications to existing equipment as required or as indicated on the contract documents in strict accordance with the existing product manufacturers recommendations.

3) Existing raceway, wire and cable extending through the construction area but serving areas outside the contract shall be rerouted and reconnected as required. All modifications shall be without any interruption to the building power, communications, security, fire alarm and life safety systems, or interference to other areas or tenants. Where any modifications would interfere with the daily operations of the building or other tenants, after-hours work or temporary services shall be provided with prior written approval from the building.

4) Existing conduit, wire, cable, supports, hangers, and other electrical installation which is removed, shall be completely removed, back to the first device or that equipment which is unaffected by the modifications. Conduit which is buried in concrete or otherwise inaccessible may be abandoned and capped at each end. All wire and cable shall be removed from any abandoned conduit.

5) Existing electrical materials and equipment, including lighting fixtures, switches, receptacles, speakers, conduit, outlet boxes, fittings, wire, cable, and other equipment and devices which are removed shall remain the property of the Owner and shall be stored or discarded as directed.

6) Reuse existing electrical products as indicated on the contract documents only as is found practical. Examine the condition of all such products, determine suitability for re-use, and periodically notify the Architect/Engineer of findings for final acceptance of re-use. Wire and cable for new construction or extension of an existing installation shall be new, in no case shall existing wire and cable be reused.

7) Refer to architectural demolition drawings for full extent and scope of partition and ceiling modifications.

a. Existing ceilings to remain shall not be altered except where removal and replacement of surfaces is required to modify systems within ceiling space.
b. Existing ceilings to be removed shall included demolition of all fixtures equipment, speakers, raceway, and wire, including any obsolete or previously abandoned products. Remaining areas shall only be altered as required and in accordance with the contract documents.
c. Existing partitions to remain shall not be altered except where removal and replacement of surfaces is required to modify systems within partitions.
d. Existing partitions to be removed shall include demolition of all devices, raceway and wire including any obsolete or previously abandoned products. Raceway and wiring systems serving other remaining areas shall only be altered as required and in accordance with the contract documents.
e. Existing floor mounted devices shall be demolished. Provide abandoning plates and fire proofing as required.

8) Refer to mechanical and plumbing demolition drawings for full extent and scope of electrically operated equipment modifications.

a. Demolition of existing mechanical equipment shall include associated disconnects, raceway, wire and controls.

RSN: 1940718
Permit #: 25-2572466-LT

Salas O'Brien
salasobrien.com
Greenwood Village
9250 East Costilla Avenue, Suite 220
Greenwood Village, CO 80112
Registration:

CONFIDENTIAL
THIS DRAWING AND ASSOCIATED DESIGN ELEMENTS ARE CONFIDENTIAL AND THE PROPERTY OF SALAS O'BRIEN, WHICH RETAINS ALL COMMON LAW, COPYRIGHT, STATUTORY AND OTHER RIGHTS THERETO. ANY UNAUTHORIZED USE, REUSE OR REPRODUCTION IS PROHIBITED. UNLESS OTHERWISE AGREED TO BY SALAS O'BRIEN, THIS DRAWING (AS WELL AS ANY COPIES) SHALL BE RETURNED TO SALAS O'BRIEN UPON REQUEST.

PROFESSIONAL SEAL
COLORADO LICENSED PROFESSIONAL ENGINEER
MICHAEL P THOMPSON
53150

ISSUE DATE	DESCRIPTION
10/31/2025	PERMIT

2561-22631-00
THE MEDICAL CENTER OF AURORA

IR AHU-15 Replacement

1501 S. Potomac St,
Aurora, CO 80012

REVISIONS

Δ	DESCRIPTION	DATE

CHECKED BY	DRAWN BY
CS/MT	JD

SHEET NAME
ELECTRICAL SPECIFICATIONS

SHEET NUMBER: E001
REVISION:

Autodesk Docs://061_2561-22631-00_TMCA IR AHU-15_ME_R25/SO_2561-22631-00_TMCA IR AHU-15_ME_R25.rvt
10/30/2025 11:15:44 AM

RSN: 1940718 | PERMIT #2025 2572466

MOTOR/EQUIPMENT SCHEDULE

TAG	DESCRIPTION	LOCATION	ELECTRICAL RATING							FEEDER/SOURCE				DISCONNECT		STARTER		NOTES
			KW	FLA	HP	MCA	MOPD	VOLT	PH	PANEL	CCT	OCPD	WIRING	INTEGRAL	BY EC	SIZE	TYPE	
AHU-15	AIR HANDLING UNIT	ROOF	44.1	53.1		57.4	70	480	3	EQHS, SEC 2	25,27,29	70A/3P	3P-3W+G	VFD				1-5

NOTES:

1. REFER TO BRANCH CIRCUIT WIRING NOTES ON SHEET E000.
2. COORDINATE EXACT EQUIPMENT REQUIREMENTS WITH OTHER TRADES PRIOR TO ROUGH-IN AND INSTALLATION.
3. EQUIPMENT DISCONNECT FURNISHED WITH UNIT.
4. PROVIDE SINGLE-POINT ELECTRICAL CONNECTION TO SYSTEM CONTROL PANEL. WIRE FROM SYSTEM CONTROL PANEL TP EACH MOTOR SERVED IN ACCORDANCE WITH MANUFACTURERS' INSTRUCTIONS.
5. INSTALL AND WIRE VFD FURNISHED BY THE MECHANICAL CONTRACTOR.

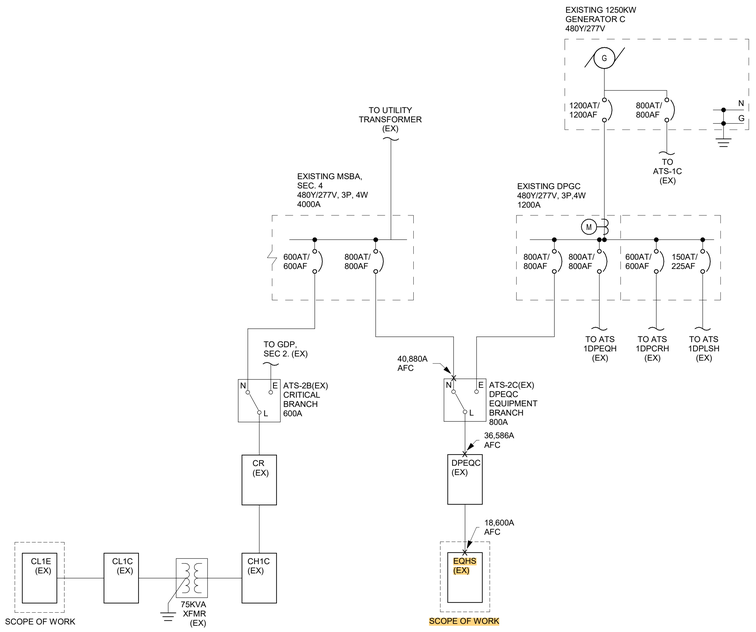

1 EXISTING ELECTRICAL ONE LINE DIAGRAM (FOR REFERENCE ONLY)

NOT TO SCALE

PANEL DESIGNATION: EQHS, SEC. 1 (EX)		LOCATION:			MOUNTING: **RECESSED**			FAULT DUTY: 65,000				
MLO: YES		MAIN:			BUS: 600A	VOLTS: **480/277**		PHASE: 3			WIRE: 4	
EQUIPMENT DESCRIPTION	DMD	WATTS A	WATTS B	WATTS C	BRKR SIZE			BRKR SIZE	WATTS A	WATTS B	WATTS C	DMD	EQUIPMENT DESCRIPTION
AIR COMPRESSOR (EX)	G				80/3	1	2	25/3				G	CART WASH (EX)
	G					3	4					G	
	G					5	6					G	
T-EQLOR (EX)	G				100/3	7	8	15/3				G	STERILIZER (EX)
	G					9	10					G	
	G					11	12					G	
STERILIZER (EX)	G				15/3	13	14	40/3				G	RTU3 SUPPLY (EX)
	G					15	16					G	
	G					17	18					G	
STERILIZER (EX)	G				15/3	19	20	15/3				G	RTU3 RETURN (EX)
	G					21	22					G	
	G					23	24					G	
EF-20 (EX)	G				15/3	25	26	400/3				G	AIR COOLED CHILLER ACC-1 (EX)
	G					27	28					G	
	G					29	30					G	
DECON STERILIZER (EX)	G				25/3	31	32	400/3				G	EQHT (EX)
	G					33	34					G	
	G					35	36					G	
DECON (EX)	G				25/3	37	38	15/3				G	DI WATER (EX)
	G					39	40					G	
	G					41	42					G	
DECON (EX)	G				25/3	43	44	20/3				G	RO WATER (EX)
	G					45	46					G	
	G					47	48					G	
OR9 CRAC (EX)	G				15/3	49	50					G	FEED FOR SEC 2 (EX)
	G					51	52					G	
	G					53	54					G	
IEF-3 (EX)	G				15/3	55	56					G	
	G					57	58					G	
	G					59	60					G	
EF-2 (EX)	G				15/3	61	62					G	
	G					63	64					G	NOT USEABLE SPACE
	G					65	66					G	NOT USEABLE SPACE
TOTAL "A"		0			0				0			0.0	CONN.KVA
TOTAL "B"			0		0					0		0.0	CONN. AMPS
TOTAL "C"				0	0						0	0.0	DEMAND KVA
TOTAL "A,B,C "					0	CONN.						0.0	DEMAND AMPS
					0	DEMAND						0.0	DESIGN KVA
					0	DESIGN						0.0	DESIGN AMPS

NOTES:
1. EXISTING PANEL SCHEDULE SHOWN FOR REFERENCE ONLY. VERIFY EXISTING CONDITIONS ON SITE.
2. PROVIDE 30 DAY METERING IN INTERVALS OF 15 MINUTES.

PANEL DESIGNATION: EQHS, SEC. 2 (EX)		LOCATION: SEE PLAN			MOUNTING: **RECESSED**			FAULT DUTY: 65,000				
MLO: YES		MAIN:			BUS: 600A	VOLTS: **480/277**		PHASE: 3			WIRE: 4	
EQUIPMENT DESCRIPTION	DMD	WATTS A	WATTS B	WATTS C	BRKR SIZE			BRKR SIZE	WATTS A	WATTS B	WATTS C	DMD	EQUIPMENT DESCRIPTION
RTU-2 RETURN VFD-1 (EX)	G				20/3	1	2	20/3				G	RTU-1 RETURN VFD-1 (EX)
	G					3	4					G	
	G					5	6					G	
RTU-2 RETURN VFD-2 (EX)	G				20/3	7	8	20/3				G	RTU-1 RETURN VFD-2 (EX)
	G					9	10					G	
	G					11	12					G	
RTU-2 SUPPLY VFD-1 (EX)	G				20/3	13	14	20/3				G	RTU-1 SUPPLY VFD-1 (EX)
	G					15	16					G	
	G					17	18					G	
RTU-2 SUPPLY VFD-2 (EX)	G				20/3	19	20	20/3				G	RTU-1 SUPPLY VFD-2 (EX)
	G					21	22					G	
	G					23	24					G	
RTU-15 (NEW) (NOTE 2)	M	14700			**70/3**	25	26	20/3				G	SPARE (EX)
	M		14700			27	28					G	
	M			14700		29	30					G	
TOTAL "A"		14700			14700				0			44.1	CONN.KVA
TOTAL "B"			14700		14700					0		53.1	CONN. AMPS
TOTAL "C"				14700	14700						0	55.1	DEMAND KVA
TOTAL "A,B,C "					44100	CONN.						66.3	DEMAND AMPS
					55134	DEMAND						55.1	DESIGN KVA
					55125	DESIGN						66.3	DESIGN AMPS

NOTES:
1. EXISTING PANEL SCHEDULE SHOWN FOR REFERENCE ONLY. VERIFY EXISTING CONDITIONS ON SITE.
2. PROVIDE NEW CIRCUIT BREAKER TO MATCH EXISTING PANEL BOARD MANUFACTURER AND AIC RATING.
3. BOLDED ITEMS INDICATE NEW WORK.
4. PROVIDE 30 DAY METERING IN INTERVALS OF 15 MINUTES.

110.14. Identify disconnects per 2023 NEC 110.22 and provide working space and egress to and around electrical equipment per 2023 NEC 110.26

Service Equipment shall be permanently And legibly marked to show the available Fault current and date. 2023 NEC 110.24(A)(B)

Every circuit and circuit modification shall be provided with a legible and permanent description that complies with all of the following conditions as applicable (see 1-6). 2023 NEC 408.4

City of Aurora Building Division
Reviewed for Code Compliance
Approved as Noted: Robert Lowman
Date: Nov 13, 2025
2021 INTERNATIONAL CODES & 2023 NEC

RSN: *1940718*
Permit #: *25-2572466-LT*

Salas O'Brien
salasobrien.com
Greenwood Village
9250 East Costilla Avenue, Suite 220
Greenwood Village, CO 80112
Registration:

CONFIDENTIAL
THIS DRAWING AND ASSOCIATED DESIGN ELEMENTS ARE CONFIDENTIAL AND THE PROPERTY OF SALAS O'BRIEN, WHICH RETAINS ALL COMMON LAW, COPYRIGHT, STATUTORY AND OTHER RIGHTS THERETO. UNAUTHORIZED USE, REPRODUCTION OR DISTRIBUTION IS PROHIBITED, UNLESS OTHERWISE AGREED TO BY SALAS O'BRIEN, THIS DRAWING (AS WELL AS ANY COPIES) SHALL BE RETURNED TO SALAS O'BRIEN UPON REQUEST.

PROFESSIONAL SEAL
COLORADO LICENSED
MICHAEL P THOMPSON
53150
PROFESSIONAL ENGINEER

ISSUE DATE	DESCRIPTION
10/31/2025	PERMIT

2561-22631-00
THE MEDICAL CENTER OF AURORA

IR AHU-15 Replacement

1501 S. Potomac St,
Aurora, CO 80012

REVISIONS

Δ	DESCRIPTION	DATE

CHECKED BY: CS/MT
DRAWN BY: JD

SHEET NAME

ELECTRICAL ONE LINE DIAGRAMS & SCHEDULES

SHEET NUMBER: E002
REVISION:

Autodesk Docs://561_2561-22631-00_TMCA IR AHU-15_ME_R25/SO_2561-22631-00_TMCA IR AHU-15_ME_R25.rvt
10/30/2025 11:15:44 AM

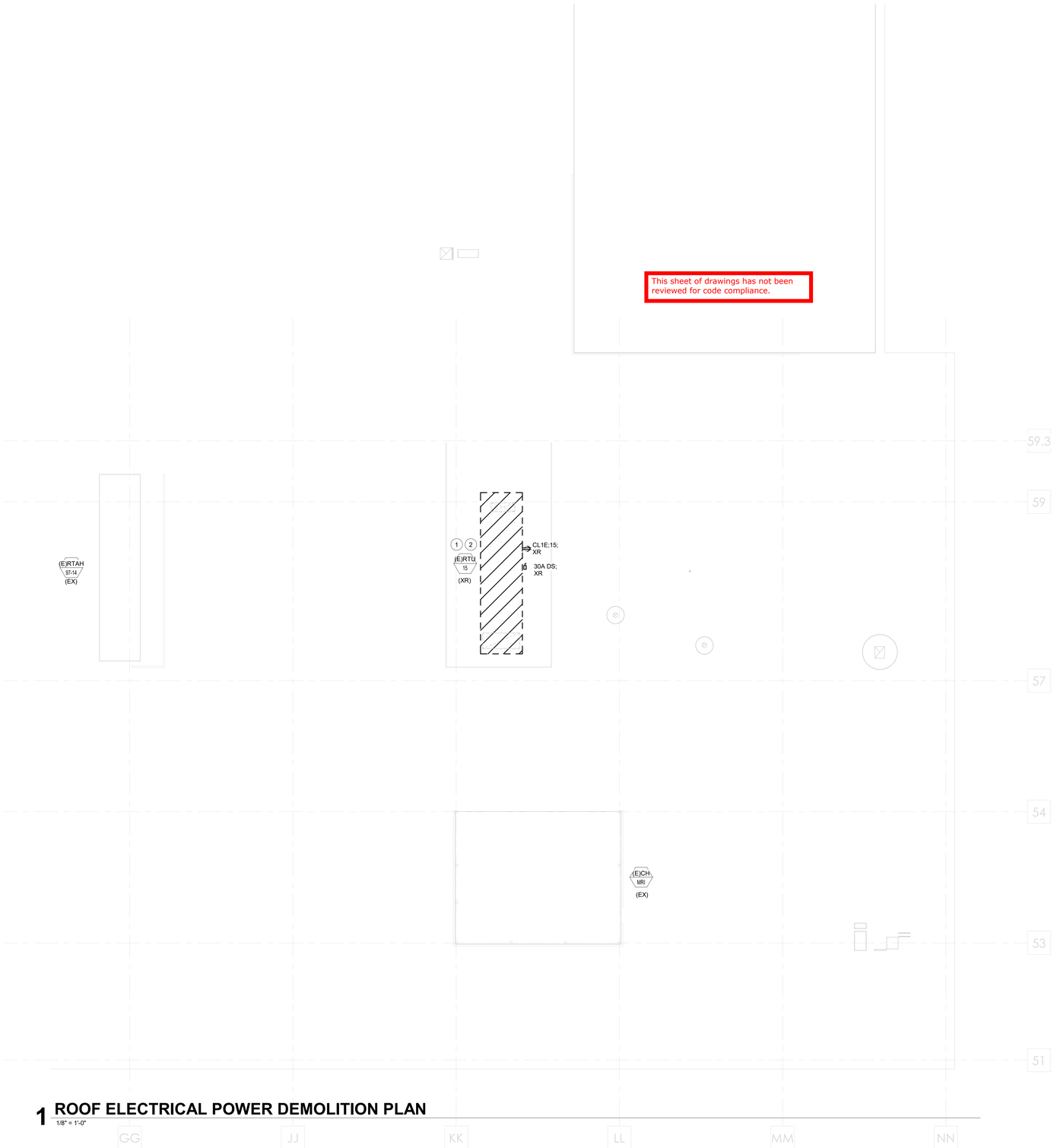

1 ROOF ELECTRICAL POWER DEMOLITION PLAN
1/8" = 1'-0"

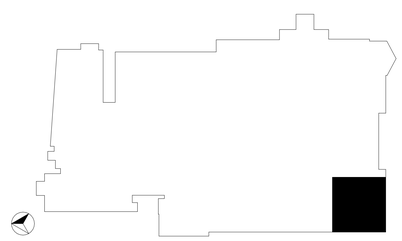

RSN: 1940718
Permit #: 25-2572466-LT

GENERAL NOTES:

1. REFER TO ELECTRICAL SYMBOLS, ABBREVIATIONS, & NOTES ON SHEET E000.
2. REFER TO ELECTRICAL SPECIFICATIONS ON SHEET E001.
3. REFER TO ONE LINE DIAGRAM & SCHEDULES ON SHEET E002.
4. REFER TO MECHANICAL DRAWINGS FOR ADDITIONAL INFORMATION.

KEYED NOTES:

1. DEMOLISH EXISTING AHU-15 ELECTRICAL CONNECTIONS AND ASSOCIATED DISCONNECT AND RECEPTACLE BACK TO ITS SOURCE.
2. DEMOLISH EXISTING DUCT DETECTORS ASSOCIATED WITH AHU-15.

Salas O'Brien

salasobrien.com

Greenwood Village
9250 East Costilla Avenue, Suite 220
Greenwood Village, CO 80112

Registration:

CONFIDENTIAL
THIS DRAWING AND ASSOCIATED DESIGN ELEMENTS ARE CONFIDENTIAL AND THE PROPERTY OF SALAS O'BRIEN, WHICH RETAINS ALL COMMON LAW, COPYRIGHT, STATUTORY AND OTHER RIGHTS THERETO. ANY UNAUTHORIZED USE, REUSE OR REPRODUCTION IS PROHIBITED. UNLESS OTHERWISE AGREED TO BY SALAS O'BRIEN, THIS DRAWING (AS WELL AS ANY COPIES) SHALL BE RETURNED TO SALAS O'BRIEN UPON REQUEST.

PROFESSIONAL SEAL

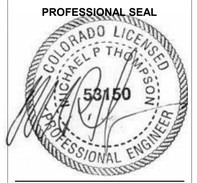

ISSUE DATE	DESCRIPTION
10/31/2025	PERMIT

2561-22631-00
THE MEDICAL CENTER OF AURORA

IR AHU-15 Replacement

1501 S. Potomac St,
Aurora, CO 80012

REVISIONS

Δ	DESCRIPTION	DATE

CHECKED BY	DRAWN BY
CS/MT	JD

SHEET NAME

ROOF ELECTRICAL POWER DEMOLITION PLAN

SHEET NUMBER	REVISION
ED201	

Autodesk Docs://061_2561-22631-00_TMCA IR AHU-15_ME_R25/SO_2561-22631-00_TMCA IR AHU-15_ME_R25.rvt

10/30/2025 11:15:45 AM

RSN: 1940718 | PERMIT #2025 2572466

Service Equipment shall be permanently And legibly marked to show the available Fault current and date. 2023 NEC 110.24(A)(B)

Every circuit and circuit modification shall be provided with a legible and permanent description that complies with all of the following conditions as applicable (see 1-6). 2023 NEC 408.4

City of Aurora Building Division
Reviewed for Code Compliance
Approved as Noted: Robert Lowman
Date: Nov 13, 2025
2021 INTERNATIONAL CODES & 2023 NEC

RSN: *1940718*
Permit #: *25-2572466-LT*

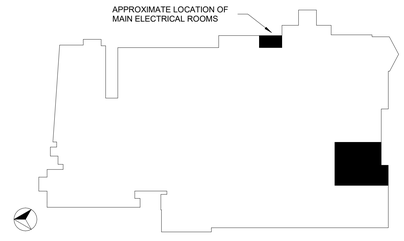

1 LEVEL 01 ELECTRICAL POWER PLAN
1/4" = 1'-0"

GENERAL NOTES:

1. REFER TO ELECTRICAL SYMBOLS, ABBREVIATIONS, & NOTES ON SHEET E000.
2. REFER TO ELECTRICAL SPECIFICATIONS ON SHEET E001.
3. REFER TO ONE LINE DIAGRAM & SCHEDULES ON SHEET E002.
4. EXISTING 'ATS-2C' & 'DPEQC' ARE LOCATED IN THE MAIN ELECTRICAL ROOM ON LEVEL 1. REFER TO GENERAL LOCATION IN KEY PLAN BELOW.
5. REFER TO MECHANICAL DRAWINGS FOR ADDITIONAL INFORMATION.

Salas O'Brien
salasobrien.com
Greenwood Village
9250 East Costilla Avenue, Suite 220
Greenwood Village, CO 80112
Registration:

CONFIDENTIAL
THIS DRAWING AND ASSOCIATED DESIGN ELEMENTS ARE CONFIDENTIAL AND THE PROPERTY OF SALAS O'BRIEN, WHICH RETAINS ALL COMMON LAW, COPYRIGHT, STATUTORY AND OTHER RIGHTS THERETO. UNAUTHORIZED USE, REPRODUCTION OR DISTRIBUTION IS PROHIBITED. UNLESS OTHERWISE AGREED TO BY SALAS O'BRIEN, THIS DRAWING (AS WELL AS ANY COPIES) SHALL BE RETURNED TO SALAS O'BRIEN UPON REQUEST.

PROFESSIONAL SEAL

ISSUE DATE	DESCRIPTION
10/31/2025	PERMIT

2561-22631-00
THE MEDICAL CENTER OF AURORA

IR AHU-15 Replacement

1501 S. Potomac St,
Aurora, CO 80012

REVISIONS

Δ	DESCRIPTION	DATE

CHECKED BY: MT
DRAWN BY: JD

SHEET NAME

LEVEL 01 ELECTRICAL POWER PLAN

SHEET NUMBER: E101
REVISION:

Autodesk Docs://061_2561-22631-00_TMCA IR AHU-15_ME_R25/SO_2561-22631-00_TMCA IR AHU-15_ME_R25.rvt
10/30/2025 11:15:46 AM

RSN: 1940718 | PERMIT #2025 2572466

GENERAL NOTES:

1. REFER TO ELECTRICAL SYMBOLS, ABBREVIATIONS, & NOTES ON SHEET E000.
2. REFER TO ELECTRICAL SPECIFICATIONS ON SHEET E001.
3. REFER TO ONE LINE DIAGRAM & SCHEDULES ON SHEET E002.

KEYED NOTES:

(1) ELECTRICAL CONTRACTOR SHALL PROVIDE DUCT MOUNTED SMOKE DETECTOR. PROVIDE FA CONTROL MODULE FOR FIRE ALARM INTERFACE AS REQUIRED. MECHANICAL CONTRACTOR SHALL PROVIDE FIRE ALARM RELAYS FOR ROOF TOP UNIT SHUT DOWN, SUCH THAT UNIT SHALL SHUT DOWN DURING A FIRE ALARM CONDITION.

1 ROOF ELECTRICAL POWER PLAN

1/8" = 1'-0"

Wiring in air handling space must comply with 2023 NEC 300.22. Firestop penetrations per 2023 NEC 300.21. Secure and support equipment per 2023 NEC 300.11.

Every circuit and circuit modification shall be provided with a legible and permanent description that complies with all of the following conditions as applicable (see 1-6). 2023 NEC 408.4

A receptacle installed outdoors in a location protected from the weather or in other damp locations shall comply with 406.9(A) 2023 NEC

Provide Ground-Fault-Circuit-Interrupter Protection per 210.8(A) through (F) 2023 NEC

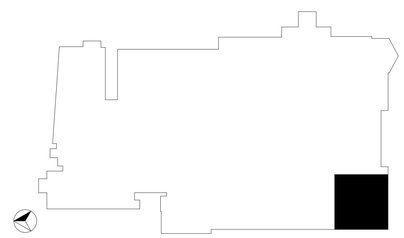

City of Aurora Building Division
Reviewed for Code Compliance
Approved as Noted: Robert Lowman
Date: Nov 13, 2025
2021 INTERNATIONAL CODES & 2023 NEC

RSN: *1940718*
Permit #: *25-2572466-LT*

Salas O'Brien
salasobrien.com
Greenwood Village
9250 East Costilla Avenue, Suite 220
Greenwood Village, CO 80112

Registration:

CONFIDENTIAL
THIS DRAWING AND ASSOCIATED DESIGN ELEMENTS ARE CONFIDENTIAL AND THE PROPERTY OF SALAS O'BRIEN, WHICH RETAINS ALL COMMON LAW, COPYRIGHT, STATUTORY AND OTHER RIGHTS THERETO. UNAUTHORIZED USE, DISCLOSURE OR REPRODUCTION IS PROHIBITED. UNLESS OTHERWISE AGREED TO BY SALAS O'BRIEN, THIS DRAWING (AS WELL AS ANY COPIES) SHALL BE RETURNED TO SALAS O'BRIEN UPON REQUEST.

PROFESSIONAL SEAL

COLORADO LICENSED
MICHAEL P THOMPSON
53150
PROFESSIONAL ENGINEER

ISSUE DATE	DESCRIPTION
10/31/2025	PERMIT

2561-22631-00
THE MEDICAL CENTER OF AURORA

IR AHU-15 Replacement

1501 S. Potomac St,
Aurora, CO 80012

REVISIONS

Δ	DESCRIPTION	DATE

CHECKED BY CS/MT
DRAWN BY JD

SHEET NAME

ROOF ELECTRICAL POWER PLAN

SHEET NUMBER E201
REVISION

10/30/2025 11:15:47 AM Autodesk Docs://061_2561-22631-00_TMCA IR AHU-15_ME_R25/SO_2561-22631-00_TMCA IR AHU-15_ME_R25.rvt