City of Aurora
Building Division
15151 E Alameda Pkwy
Aurora, CO 80012
(303) 739-7420

Notice

This material is subject to copyright protection pursuant to Federal Law: 17 United States Code Section 106.

City of Aurora Public Works Department

BUILDING PERMIT APPLICATION

Building Division • 15151 E. Alameda Parkway, Ste 2400 • Aurora, CO 80012 • 303-739-7420 • Fax: 303-739-7412
Email: ***permitcounter@auroragov.org***

Project Address 1400 S. Potomac St. Aurora, CO		**Unit #** 110
Project Name: Wound Care Center		
Contractor Company Name Empire Fire & Safety Inc	**Phone** 303.451.0975	**Fax** 303.920.9298
Contact Person Dave Walker	**Phone** 303.217.1438	
Email dave walker@empirefiresafety.com		**Fax** 303 920 9298
Architect and/or Engineer Contact information for correction items C+S Design		
Architect or Engineer name Candi + Steve Leon	**Email** CSdesign@q.com	
Phone 3.695.4071	**Fax** 720.747.1402	
Owner (Required for Certificate of Occupancy) only Medical Center of Aurora		
Owner address		
Email		
Valuation / FDA:$ 2,000.00	**Materials Cost: $** 1,000.00	

FDA = Fee Determination Assessment. (Also known as the value of project) has no relationship to the construction costs for the building which can vary greatly. Rather, The assessment is used only to determine the appropriate level of fees to fund our code compliance activities.

Describe The Work You Will Be Doing:

Add (3) sprinklers + relocate (1) sprinkler

I declare under penalty that this application has been examined by me and that the statements made herein are made in good faith pursuant to City of Aurora tax and licensing regulations; and to the best of my knowledge and belief are true, correct and complete.

Print Name Jesse Castreras **Signature** _____ **Date** 11/21/2013

BOARD OF APPEALS: Contractor's Appeals and Standards Board. Applicants have the right to have the board hear appeals of orders, decisions or determinations made by the building official relative to the application and interpretation of the building code. Any application for appeal to the board shall be based on a claim that the true intent of the code or the rules legally adopted there under have been incorrectly interpreted, the provisions of the building code do not fully apply or an equally good or better form of construction is proposed.

THIS SPACE FOR OFFICE USE ONLY

Fee Determination Assessment: $ 200.00

Change of occupancy/use: ☐ Yes ☐ No

REVIEWS
- ☐ Structural
- ☐ Mechanical
- ☐ Plumbing
- ☐ Electrical
- ☐ Fire-Life Safety
- ☐ Building Life Safety

INSPECTIONS
- ☐ Structural
- ☐ Mechanical
- ☐ Plumbing
- ☐ Electrical
- ☒ Life Safety
- ☐ Gate/Hazard

Intake Date: 11/21

Balance Due: $ 120

PRE APPROVAL Initial _____ ☐ Zoning ☐ Water

Exterior changes? ☐ Yes ☐ No

Homeowner verified: ☐ Yes ☐ No

Permit Type: CT

Mid roof / Ave Bldg Height: MH

Parent Permit RSN: 878551

Plans Examiner: JMc

Subtype: 4X Sprinkler

RSN: 856463

Plans Picked Up By: _____

Company Name: RSN: 856463

Phone Number Permit #: 2013-802881-CT

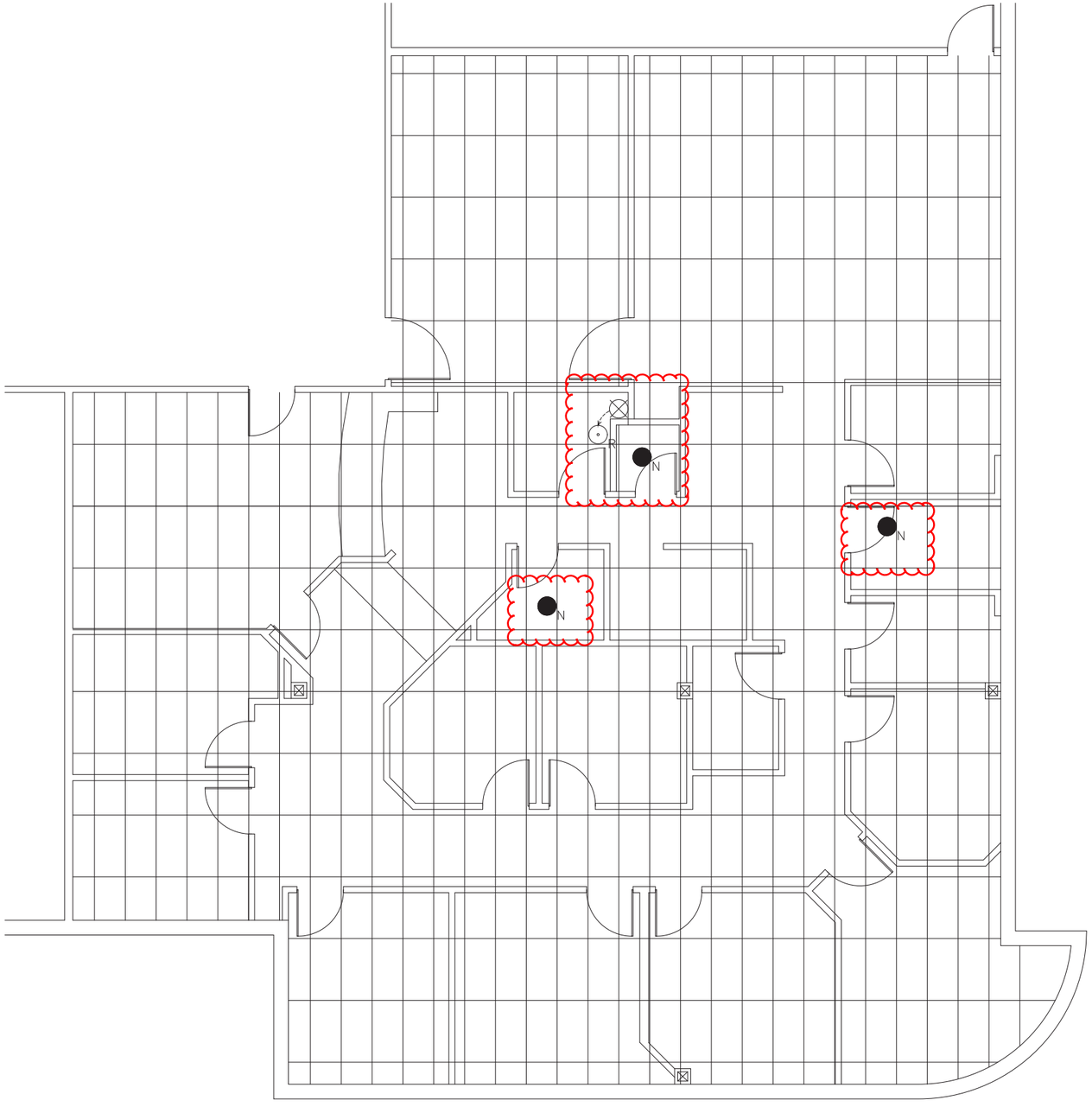

Reflected Ceiling Plan – Sprinklers

Scale: 1/4"=1'–0"

GENERAL NOTES

1. ALL WORK TO BE PERFORMED PER NFPA 13, 2007 AND LOCAL CODES.
2. ALL MATERAILS TO BE U.L. LISTED FOR FIRE PROTECTION USE PER NFPA 13 12007.
3. NEW SPRINKLERS TO BE ADDED FROM EXISTING LINES AT A POINT TO BE OF SUFFICIENT SIE TO SUPPLY THE NEW NUMBER OF SPRINKLERS.
4. NO MODIFICATIONS TO EXISTING MAINS AND LINES.
5. NEW SPRINKLERS TO BE RELIABLE MODEL G SR 165F RECESSED PENDENT

Sprinkler Legend:

- ⊗ Existing to be relocated
- ⊙R Relocated
- ●N New

City of Aurora Building Division
Reviewed for Code Compliance
Approved as Noted: *J Van Essen* 08-587
Date: Nov 21, 2013
2009 INTERNATIONAL CODES & 2011 NEC
2007 NFPA 13
RSN: ***856463***
Permit #: ***2013-802881-CT***

ALAN W. BRUCH
NICET LEVEL III
WATER BASED SUPPRESSION SYSTEMS
CERTIFICATION NO. 108440

NOVEMBER 20, 2013

Alan W. Bruch

SIGNATURE

Installed By:

Empire Fire & Safety, Inc.

10475 Irma Drive #17
Northglenn, Colorado 80233
Phone: 303–451–0975

Wound Care Center
Medical Center of Aurora

1400 S. Potomac St., #110
Aurora, Colorado 80012

Sprinkler System

Drafted By:

C&S Design
2893 So. Paris Court
Aurora, Colorado 80014
Phone: 303.695.4071
Fax: 720.747.1402

Empire Fire & Safety Job Number:

Empire Contact:
Dave Walker

Engineer's Stamp:

Date: 11/18/2013 | Scale: 1/4"=1'–0"

Revisions:

Drawing Name:
Wound Care Center

Sheet 1 of 1

RSN: *856463*
Permit #: *2013-802881-CT*

June 28, 2013 Sprinkler 41a

TECHNICAL DATA

MICROFAST® AND MicrofastHP® QUICK RESPONSE PENDENT SPRINKLERS

The Viking Corporation, 210 N Industrial Park Drive, Hastings MI 49058
Telephone: 269-945-9501 Technical Services: 877-384-5464 Fax: 269-818-1680 Email: techsvcs@vikingcorp.com

1. DESCRIPTION

Viking Microfast® and MicrofastHP® Quick Response Pendent Sprinklers are small, thermosensitive, glass-bulb spray sprinklers available in several different finishes and temperature ratings and K-Factors to meet design requirements. The special Polyester,Polytetrafluoroethylene (PTFE), and Electroless Nickel PTFE (ENT) coatings can be used in decorative applications where colors are desired. In addition, these coatings have been investigated for installation in corrosive atmospheres and are listed/approved as corrosion resistant as indicated in the Approval Charts. (Note: **FM Global approves ENT finish as corrosion resistant.** FM Global has no approval classification for PTFE and Polyester coatings as corrosion resistant.)

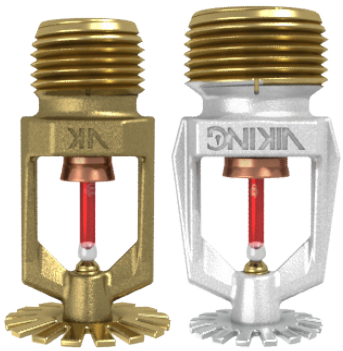

PN 12979 **PN 06666B**

2. LISTINGS AND APPROVALS

cULus Listed: Category VNIV
FM Approved: Classes 2001, 2002, 2015, and 2017
NYC Approved: Calendar Number 219-76-SA and MEA 89-92-E, Volume 16
ABS Certified: Certificate 04-HS407984C-PDA
VdS Approved: Certificates G4040095, G4040097, G4060056, G4060057, G4880045, G4930038, and G4980021
LPC Approved: Ref. Nos. 096e/03 and 096e/04
CE Certified: Standard EN 12259-1, EC-certificates of conformity 0786-CPD-40130, 0786-CPD-40170 and 0786-CPD-40279, 0832-CPD-2001, and 0832-CPD-2003
MED Certified: Standard EN 12259-1, EC-certificate of conformity 0832-MED-1003 and 0832-MED-1008
NOTE: Other International approval certificates are available upon request.

Refer to Approval Chart 1 and Design Criteria on page 41d for cULus Listing requirements and refer to Approval Chart 2 and Design Criteria on page 41f for FM Approval requirements that must be followed.

3. TECHNICAL DATA

Specifications:
Available since 1987.
Minimum Operating Pressure: 7 psi (0.5 bar)*
Maximum Working Pressure: Sprinklers 12282 and 12290 are rated for use with water working pressures ranging from the minimum 7 psi (0.5 bar) up to 250 psi (17 bar) for high-pressure systems. High-pressure (HP) sprinklers can be identified by locating "250" stamped on the deflector. All other Part Nos. not mentioned above are rated to a maximum 175 psi (12 bar) wwp.
Factory tested hydrostatically to 500 psi (34.5 bar)
Thread size: Refer to the Approval Charts
Nominal K-Factor: Refer to the Approval Charts
Glass-bulb fluid temperature rated to -65 °F (-55 °C)
Overall Length: Refer to the Approval Charts

Viking Technical Data may be found on The Viking Corporation's Web site at http://www.vikinggroupinc.com. The Web site may include a more recent edition of this Technical Data Page.

*cULus Listing, FM Approval, and NFPA 13 installs require a minimum of 7 psi (0.5 bar). The minimum operating pressure for LPCB and CE Approvals ONLY is 5 psi (0.35 bar).

Material Standards:
Frame Casting: Brass UNS-C84400 or QM Brass for Sprinklers 12979 and 12282. Brass UNS-C84400 for all other sprinklers.
Deflector: Phosphor Bronze UNS-C51000 or Copper UNS-C19500 for Sprinklers 12979, 06666B, and 06765B. Copper UNS-C19500 for Sprinkler 12282. Phosphor Bronze UNS-C51000, Copper UNS-C19500 or Brass UNS-C26000 for Sprinkler 06720B. Brass UNS-C26000 for all other Sprinklers.
Bushing (for Sprinklers 06718B, 06720B, and 12290): Brass UNS-C36000
Bulb: Glass, nominal 3 mm diameter
Belleville Spring Sealing Assembly: Nickel Alloy, coated on both sides with PTFE Tape
Screw: Brass UNS-C36000
Pip Cap and Insert Assembly: Copper UNS-C11000 and Stainless Steel UNS-S30400
For PTFE Coated Sprinklers: Belleville Spring-Exposed, Screw-Nickel Plated, Pip Cap-PTFE Coated
For Polyester Coated Sprinklers: Belleville Spring-Exposed
For ENT Coated Sprinklers: Belleville Spring-Exposed, Screw and Pipcap - ENT coated.

Replaces page 41a-f, dated June 5, 2013.
(ENT finish is now approved as corrosion resistant.)

VIKING®

TECHNICAL DATA

MICROFAST® AND MicrofastHP® QUICK RESPONSE PENDENT SPRINKLERS

The Viking Corporation, 210 N Industrial Park Drive, Hastings MI 49058
Telephone: 269-945-9501 Technical Services: 877-384-5464 Fax: 269-818-1680 Email: techsvcs@vikingcorp.com

Ordering Information: (Also refer to the current Viking price list.)
Order Microfast® and MicrofastHP® Quick Response Pendent Sprinklers by first adding the appropriate suffix for the sprinkler finish and then the appropriate suffix for the temperature rating to the sprinkler base part number.
Finish Suffix: Brass = A, Chrome = F, White Polyester = M-/W, Black Polyester = M-/B, Black PTFE = N, and ENT = JN
Temperature Suffix: 135 °F (57 °C) = A, 155 °F (68 °C) = B, 175 °F (79 °C) = D, 200 °F (93 °C) = E, and 286 °F (141 °C) = G
For example, sprinkler VK302 with a 1/2" thread, Brass finish and a 155 °F (68 °C) temperature rating = Part No. 12979AB

Available Finishes And Temperature Ratings:

Refer to Table 1.

Accessories: (Also refer to the "Sprinkler Accessories" section of the Viking data book.)

Sprinkler Wrenches:

A. Standard Wrench: Part No. 10896W/B (available since 2000).
B. Wrench for Recessed Pendent Sprinklers: Part No. 16036W/B* (available since 2011)
C. Optional Protective Sprinkler Cap Remover/Escutcheon Installer Tool** Part No. 15915 (available since 2010.)
*A ½" ratchet is required (not available from Viking).
**Allows use from the floor by attaching a length of 1" diameter CPVC tubing to the tool. Ideal for sprinkler cabinets. Refer to Bulletin F_051808.

Sprinkler Cabinets:

A. Six-head capacity: Part No. 01724A (available since 1971)
B. Twelve-head capacity: Part No. 01725A (available since 1971)

4. INSTALLATION

Refer to appropriate NFPA Installation Standards.

5. OPERATION

During fire conditions, the heat-sensitive liquid in the glass bulb expands, causing the glass to shatter, releasing the pip cap and sealing spring assembly. Water flowing through the sprinkler orifice strikes the sprinkler deflector, forming a uniform spray pattern to extinguish or control the fire.

6. INSPECTIONS, TESTS AND MAINTENANCE

Refer to NFPA 25 for Inspection, Testing and Maintenance requirements.

7. AVAILABILITY

The Viking Microfast® and MicrofastHP® Quick Response Pendent Sprinklers are available through a network of domestic and international distributors. See The Viking Corporation web site for the closest distributor or contact The Viking Corporation.

8. GUARANTEE

For details of warranty, refer to Viking's current list price schedule or contact Viking directly.

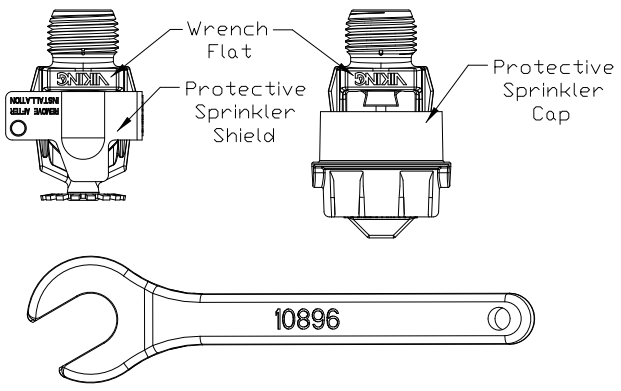

Figure 1: Standard Sprinkler Wrench 10896W/B

RSN: *856463*
Permit #: *2013-802881-CT*

June 28, 2013 Sprinkler 41c

MICROFAST® AND MicrofastHP® QUICK RESPONSE PENDENT SPRINKLERS

TECHNICAL DATA

The Viking Corporation, 210 N Industrial Park Drive, Hastings MI 49058
Telephone: 269-945-9501 Technical Services: 877-384-5464 Fax: 269-818-1680 Email: techsvcs@vikingcorp.com

TABLE 1: AVAILABLE SPRINKLER TEMPERATURE RATINGS AND FINISHES

Sprinkler Temperature Classification	Sprinkler Nominal Temperature Rating[1]	Maximum Ambient Ceiling Temperature[2]	Bulb Color
Ordinary	135 °F (57 °C)	100 °F (38 °C)	Orange
Ordinary	155 °F (68 °C)	100 °F (38 °C)	Red
Intermediate	175 °F (79 °C)	150 °F (65 °C)	Yellow
Intermediate	200 °F (93 °C)	150 °F (65 °C)	Green
High	286 °F (141 °C)	225 °F (107 °C)	Blue

Sprinkler Finishes: Brass, Chrome, White Polyester, Black Polyester, Black PTFE, and ENT

Corrosion-Resistant Coatings[3]: White Polyester, Black Polyester, and Black PTFE. ENT in all temperature ratings except 135 °F (57 °C).

Footnotes

[1] The sprinkler temperature rating is stamped on the deflector.

[2] Based on NFPA-13. Other limits may apply, depending on fire loading, sprinkler location, and other requirements of the Authority Having Jurisdiction. Refer to specific installation standards.

[3] The corrosion-resistant coatings have passed the standard corrosion test required by the approving agencies indicated in the Approval Charts. These tests cannot and do not represent all possible corrosive environments. Prior to installation, verify through the end-user that the coatings are compatible with or suitable for the proposed environment. For automatic sprinklers, the coatings indicated are applied to the exposed exterior surfaces only. Note that the spring is exposed on sprinklers with Polyester, PTFE, and ENT coatings. For ENT coated automatic sprinklers, the waterway is coated.

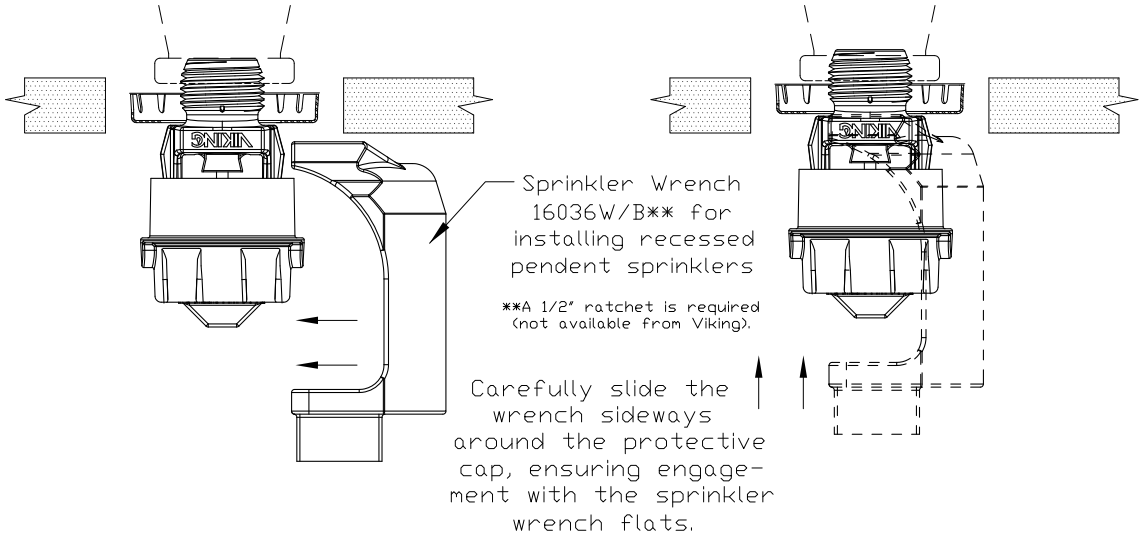

Figure 2: Wrench 16036W/B for Recessed Pendent Sprinklers

RSN: *856463*
Permit #: *2013-802881-CT*

June 28, 2013

TECHNICAL DATA

MICROFAST® AND MicrofastHP® QUICK RESPONSE PENDENT SPRINKLERS

The Viking Corporation, 210 N Industrial Park Drive, Hastings MI 49058
Telephone: 269-945-9501 Technical Services: 877-384-5464 Fax: 269-818-1680 Email: techsvcs@vikingcorp.com

Approval Chart 1 (UL)

Microfast® and MicrofastHP® Quick Response Pendent Sprinklers
Maximum 175 PSI (12 bar) WWP

KEY: A1X — Temperature, Finish, Escutcheon (if applicable)

Sprinkler Base Part No.[1]	SIN	Thread Size		Nominal K-Factor		Overall Length		Listings and Approvals[3] (Refer also to Design Criteria on page 41e.)					
		NPT	BSP	U.S.	metric[2]	Inches	mm	cULus[4]	NYC[5]	VdS	LPCB	CE	
Standard Orifice													
12979	VK302	1/2”	15 mm	5.6	80.6	2-1/4”	57	A1X, B1Y, C4, E4Z	A1X, B1Y	--	--	--	--
18021	VK302	1/2”	15 mm	5.6	80.6	2-1/4”	58	A1X, B1Y	A1X, B1Y	A2	A2X, B2Y	C2X, E2Y[11]	C2X, E2Y[14]
Large Orifice													
06666B	VK352	3/4”	20 mm	8.0	115.2	2-3/8”	60	A1X, B1Y, C4, E4Z	A1X, B1Y	A2	A2X	C2[11]	--
06765B[15]	VK352	1/2”	15 mm	8.0	115.2	2-3/8”	60	A1X, B1Y, C4, E4Z	A1X, B1Y	A2	--	A2[12]	--
Small Orifice[8]													
06718B[9]	VK329	1/2”	15 mm	2.8	40.3	2-3/16”	56	A1X, B1Y	A1X, B1Y	--	--	--	--
06720B[9]	VK331	1/2”	15 mm	4.2	57	2-1/4”	58	A1X, B1Y	A1X, B1Y	--	--	--	--
06932B	VK331	--	10 mm	4.2	57	2-3/8”	60	--	--	A2	--	G3[13]	--

Maximum 250 PSI (17 bar) WWP
Standard Orifice

Sprinkler Base Part No[1]	SIN	Thread Size		Nominal K-Factor		Overall Length		Listings and Approvals[3] (Refer also to Design Criteria on page 41e.)					
		NPT	BSP	U.S.	metric[2]	Inches	mm	cULus[4]	NYC[10]	VdS	LPCB	CE	
12282	VK317	1/2”	15 mm	5.6	80.6	2-1/4”	58	A1X, B1Y	A1X	--	--	--	--
Maximum 250 PSI (17 bar) WWP Small Orifice[9]													
12290[10]	VK342	1/2”	15 mm	2.8	40.3	2-3/16”	56	A1X, B1Y	A1X	--	--	--	--

Approved Temperature Ratings

A - 135 °F (57 °C), 155 °F (68 °C), 175 °F (79 °C), 200 °F (93 °C), and 286 °F (141 °C)
B - 135 °F (57 °C), 155 °F (68 °C), 175 °F (79 °C), and 200 °F (93 °C)
C - 155 °F (68 °C), 175 °F (79 °C), 200 °F (93 °C), and 286 °F (141 °C)
D - 135 °F (57 °C), 155 °F (68 °C), 175 °F (79 °C), and 286 °F (141 °C)
E - 155 °F (68 °C), 175 °F (79 °C), and 200 °F (93 °C)
F - 155 °F (68 °C), 175 °F (79 °C), and 286 °F (141 °C)
G - 155 °F (68 °C)

Approved Finishes

1 - Brass, Chrome, White Polyester[6,7], Black Polyester[6,7], and Black PTFE[6]
2 - Brass, Chrome, White Polyester[7], and Black Polyester[7]
3 - Brass and Chrome
4 - ENT[6]

Approved Escutcheons

X - Standard surface-mounted escutcheon or the Viking Microfast® Model F-1 Adjustable Escutcheon
Y - Standard surface-mounted escutcheon or the Viking Microfast® Model F-1 Adjustable Escutcheon **or** recessed with the Viking Micromatic® Model E-1 or E-2 Recessed Escutcheon
Z - Standard surface-mounted escutcheon or recessed with the Viking Micromatic® Model E-1

Footnotes

[1] Base part number is shown. For complete part number, refer to Viking’s current price schedule.
[2] Metric K-factor measurement shown is when pressure is measured in Bar. When pressure is measured in kPa, divide the metric K-factor shown by 10.0.
[3] This table shows the listings and approvals available at the time of printing. Check with the manufacturer for any additional approvals.
[4] Listed by Underwriters Laboratories Inc. for use in the U.S. and Canada.
[5] Accepted for use, City of New York Board of Standards and Appeals, Calendar Number 219-76-SA.
[6] cULus Listed as corrosion resistant.
[7] Other colors are available on request with the same Listings and Approvals as the standard colors.
[8] Listings and Approvals limited to Light Hazard Occupancies where allowed by the installation standards being applied, with hydraulically calculated wet systems only. **Exception:** 4.2K sprinklers may be installed on hydraulically calculated dry pipe systems where piping is corrosion resistant or internally galvanized.
[9] The sprinkler orifice is bushed.
[10] Accepted for use, City of New York Department of Buildings, MEA Number 89-92-E, Vol. 16.
[11] CE Certified, Standard EN 12259-1, EC-certificates of conformity 0832-CPD-2001 and 0832-CPD-2003.
[12] CE Certified, Standard EN 12259-1, EC-certificate of conformity 0786-CPD-40279.
[13] CE Certified, Standard EN 12259-1, EC-certificate of conformity 0786-CPD-40130 and 0786-CPD-40170.
[14] MED Certified, Standard EN 12259-1, EC-certificates of conformity 0832-MED-1003 and 0832-MED-1008.
[15] The 1/2” NPT Large Orifice Sprinkler is Listed and Approved for retrofit only.

MICROFAST® AND MicrofastHP® QUICK RESPONSE PENDENT SPRINKLERS

TECHNICAL DATA

The Viking Corporation, 210 N Industrial Park Drive, Hastings MI 49058
Telephone: 269-945-9501 Technical Services: 877-384-5464 Fax: 269-818-1680 Email: techsvcs@vikingcorp.com

DESIGN CRITERIA - UL

(Also refer to Approval Chart 1 on page 41d)

cULus Listing Requirements:

Microfast® and MicrofastHP® Quick Response Pendent Sprinklers are cULus Listed as indicated in the Approval Chart for installation in accordance with the latest edition of NFPA 13 for standard spray sprinklers.

- Designed for use in Light and Ordinary Hazard occupancies *(exception: small orifice sprinklers are limited to Light Hazard where allowed by the installation standards being applied, with hydraulically calculated wet systems only).*
- The sprinkler installation rules contained in NFPA 13 for standard spray pendent sprinklers must be followed.

IMPORTANT: Always refer to Bulletin Form No. F_091699 - Care and Handling of Sprinklers. Also refer to page QR1-3 for general care, installation, and maintenance information. Viking sprinklers are to be installed in accordance with the latest edition of Viking technical data, the appropriate standards of NFPA, LPCB, APSAD, VdS or other similar organizations, and also with the provisions of governmental codes, ordinances, and standards, whenever applicable.

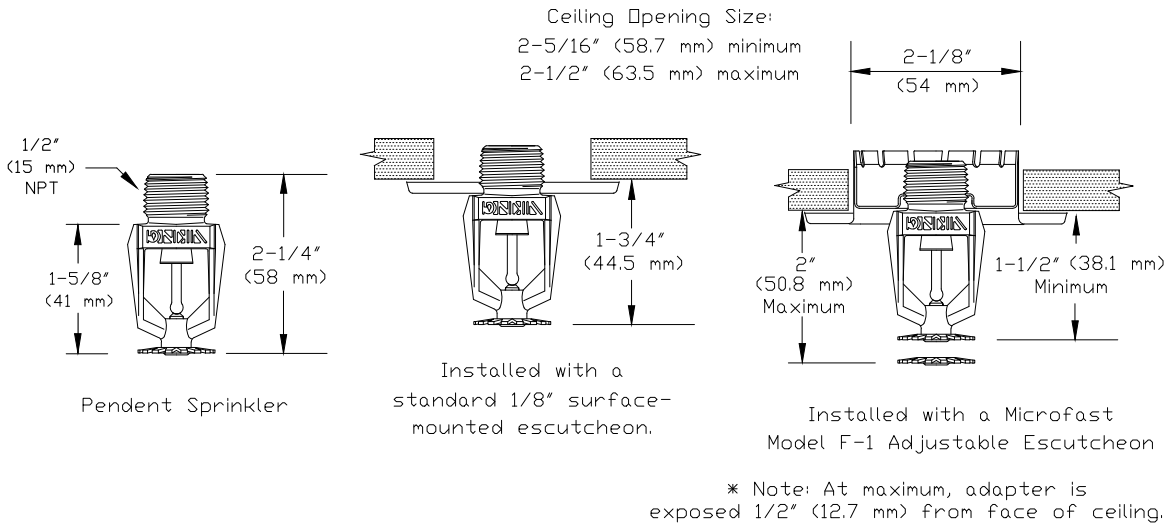

Figure 3: Sprinkler VK302 Dimensions with a Standard Escutcheon and the Model F-1 Adjustable Escutcheon

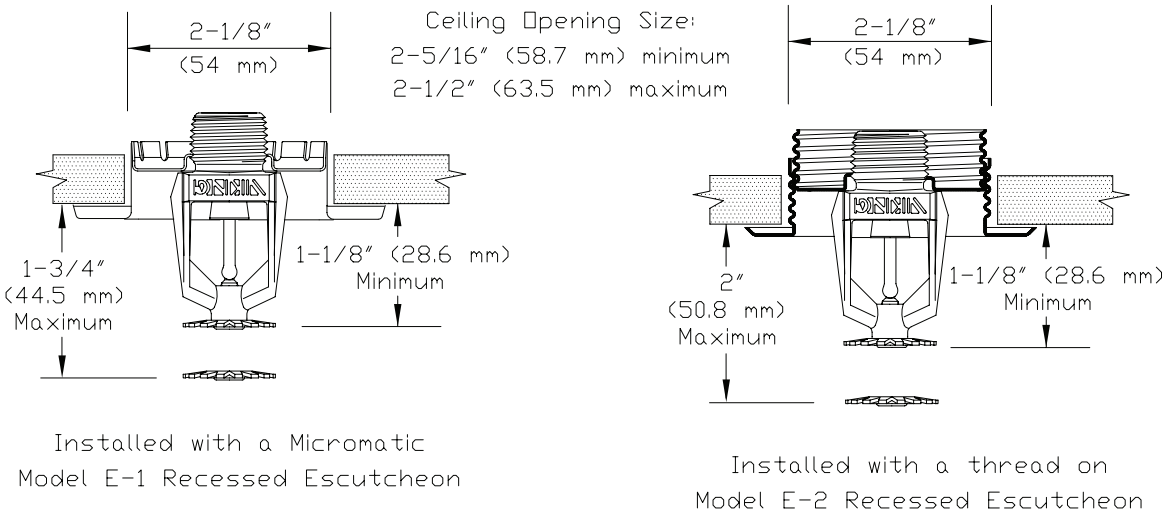

Figure 4: Sprinkler VK302 Dimensions with the Model E-1 and E-2 Recessed Escutcheons

TECHNICAL DATA

MICROFAST® AND MicrofastHP® QUICK RESPONSE PENDENT SPRINKLERS

The Viking Corporation, 210 N Industrial Park Drive, Hastings MI 49058
Telephone: 269-945-9501 Technical Services: 877-384-5464 Fax: 269-818-1680 Email: techsvcs@vikingcorp.com

Approval Chart 2 (FM)

Microfast® Quick Response Pendent Sprinklers
Maximum 175 PSI (12 bar) WWP

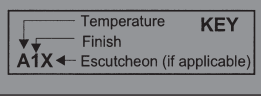

Sprinkler Base Part No.[1]	SIN	Thread Size		Nominal K-Factor		Overall Length		FM Approvals[3] (Refer also to Design Criteria below.)
		NPT	BSP	U.S.	metric[2]	Inches	mm	
Standard Orifice								
12979	VK302	1/2"	15 mm	5.6	80.6	2-1/4"	57	A2X, B2Y, C3, D3Z
18021	VK302	1/2"	15 mm	5.6	80.6	2-1/4"	58	A2X, B2Y
Large Orifice								
06666B	VK352	3/4"	20 mm	8.0	115.2	2-3/8"	60	A2X, B2Y, C3, D3Z
06765B[7]	VK352	1/2"	15 mm	8.0	115.2	2-3/8"	60	A2X, B2Y, C3, D3Z
Small Orifice[4]								
06718B[6]	VK329	1/2"	15 mm	2.8	40.3	2-3/16"	56	A1X

Approved Temperature Ratings

A - 135 °F (57 °C), 155 °F (68 °C), 175 °F (79 °C), 200 °F (93 °C), and 286 °F (141 °C)
B - 135 °F (57 °C), 155 °F (68 °C), 175 °F (79 °C), and 200 °F (93 °C)
C- 155 °F (68 °C), 175 °F (79 °C), 200 °F (93 °C), and 286 °F (141 °C)
D - 155 °F (68 °C), 175 °F (79 °C), and 200 °F (93 °C)

Approved Finishes

1 - Brass and Chrome
2 - Brass, Chrome, White Polyester[5], and Black Polyester[5]
3 - ENT[8]

Approved Escutcheons

X - Standard surface-mounted escutcheon or the Viking Microfast® Model F-1 Adjustable Escutcheon
Y - Standard surface-mounted escutcheon or the Viking Microfast® Model F-1 Adjustable Escutcheon **or** recessed with the Viking Micromatic® Model E-1 or E-2 Recessed Escutcheon
Z - Standard surface-mounted escutcheon or recessed with the Viking Micromatic® Model E-1

Footnotes

[1] Base part number is shown. For complete part number, refer to Viking's current price schedule.
[2] Metric K-factor measurement shown is when pressure is measured in Bar. When pressure is measured in kPa, divide the metric K-factor shown by 10.0.
[3] This table shows the listings and approvals available at the time of printing. Check with the manufacturer for any additional approvals.
[4] FM Approved as quick response control mode standard spray **Non-storage** sprinklers. For specific application and installation requirements, reference the latest applicable FM Loss Prevention Data Sheets (including Data Sheet 2-0).
[5] Other colors are available on request with the same Listings and Approvals as the standard colors.
[6] The sprinkler orifice is bushed.
[7] The 1/2" NPT Large Orifice Sprinkler is Listed and Approved for retrofit only.
[8] FM approved as corrosion resistant.

DESIGN CRITERIA - FM

(Also refer to Approval Chart 2 above.)

FM Approval Requirements:

The sprinklers indicated in Approval Chart 2 are FM Approved as quick response **Non-storage** standard spray pendent sprinklers as indicated in the FM Approval Guide†. For specific application and installation requirements, reference the latest applicable FM Loss Prevention Data Sheets (including Data Sheets 2-0 and 8-9). FM Global Loss Prevention Data Sheets contain guidelines relating to, but not limited to: minimum water supply requirements, hydraulic design, ceiling slope and obstructions, minimum and maximum allowable spacing, and deflector distance below the ceiling.

NOTE: The FM installation guidelines may differ from cULus and/or NFPA criteria.

†Sprinklers VK302 and VK352 are also FM Approved as quick response **Rack Storage** standard spray pendent sprinklers. Refer to technical data page 131a-e for Intermediate Level In-Rack Sprinklers.

IMPORTANT: Always refer to Bulletin Form No. F_091699 - Care and Handling of Sprinklers. Also refer to page QR1-3 for general care, installation, and maintenance information. Viking sprinklers are to be installed in accordance with the latest edition of Viking technical data, the appropriate standards of NFPA, FM Global, LPCB, APSAD, VdS or other similar organizations, and also with the provisions of governmental codes, ordinances, and standards, whenever applicable.

RSN: *856463*
Permit #: *2013-802881-CT*

January 27, 2012 Sprinkler 83a

VIKING®

TECHNICAL DATA

STANDARD/QUICK RESPONSE EXTENDED COVERAGE LIGHT AND ORDINARY HAZARD ELO SPRINKLERS

The Viking Corporation, 210 N Industrial Park Drive, Hastings MI 49058
Telephone: 269-945-9501 Technical Services: 877-384-5464 Fax: 269-818-1680 Email: techsvcs@vikingcorp.com

1. DESCRIPTION

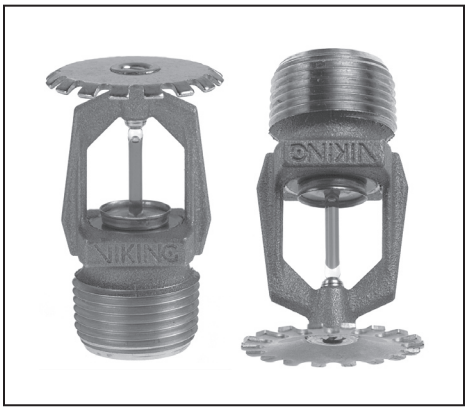

Viking EC/QREC Light and Ordinary Hazard Extra-Large Orifice Sprinklers VK532 and VK534 are thermosensitive spray sprinklers available in several different finishes and temperature ratings to meet varying design requirements. The extra-large orifice produces the flows required to meet Light and Ordinary Hazard density requirements at lower pressures than standard orifice or large orifice sprinklers. The glass bulb operating element and special deflector characteristics meet the challenges of quick response extended coverage standards. Upright Sprinkler VK532 is cULus Listed as standard and quick response and FM Approved as quick response. Pendent Sprinkler VK534 is cULus Listed as standard and quick response. The special Polyester and Teflon® coatings can be used in decorative applications where colors are desired.

2. LISTINGS AND APPROVALS

cULus Listed: Category VNIV

FM Approved: Class 2022

NYC Approved: MEA 89-92-E, Volume 9

Refer to Approval Chart 1 and Design Criteria on pages 83d-e for cULus Listing requirements, and refer to Approval Chart 2 and Design Criteria on page 83f for FM Approval requirements that must be followed.

3. TECHNICAL DATA

Specifications:

Available since 1993.
Minimum Operating Pressure: Refer to the Approval Charts.
Maximum Working Pressure: 175 psi (12 Bar). Factory tested hydrostatically to 500 psi (34.5 bar).
Factory tested hydrostatically to 500 psi (34.5 bar).
Thread size: 3/4” (20 mm) NPT
Nominal K-Factor: 11.2 U.S. (161.3 metric†)
† Metric K-factor measurement shown is in Bar. When pressure is measured in kPa, divide the metric K-factor shown by 10.0.
Glass-bulb fluid temperature rated to -65 °F (-55 °C)
Overall Length: Part No. 08687: 2-5/16 (59 mm), Part No. 08340: 2-3/8” (61 mm)

Viking Technical Data may be found on The Viking Corporation’s Web site at http://www.vikinggroupinc.com. The Web site may include a more recent edition of this Technical Data Page.

Material Standards:

Sprinkler Frame: Brass UNS-C84400
Deflector: Brass UNS-C26000 for Sprinkler 08340. Copper UNS-C19500 for Sprinkler 08687
Bulb: Glass, nominal 3 mm diameter
Belleville Spring Sealing Assembly: Nickel Alloy, coated on both sides with Teflon Tape
Screw: Brass UNS-C36000
Pip Cap and Insert Assembly: Copper UNS-C11000 and Stainless Steel UNS-S30400
For Teflon® Coated Sprinklers: Belleville Spring-Exposed, Screw-Nickel Plated, Pip Cap-Teflon® Coated
For Polyester Coated Sprinklers: Belleville Spring-Exposed

Ordering Information: (Also refer to the current Viking price list.)

Order EC/QREC Light and Ordinary Hazard Extra-Large Orifice Sprinklers VK532 and VK534 by first adding the appropriate suffix for the sprinkler finish and then the appropriate suffix for the temperature rating to the sprinkler base part number.
Finish Suffix: Brass = A, Chrome-Enloy® = F, White Polyester = M-/W, Black Polyester = M-/B, and Black Teflon® = N
Temperature Suffix: 135 °F (57 °C) = A, 155 °F (68 °C) = B, 175 °F (79 °C) = D, 200 °F (93 °C) = E, and 286 °F (141 °C) = G
For example, sprinkler VK532 with a Brass finish and a 155 °F (68 °C) temperature rating = Part No. 08687AB

Available Finishes And Temperature Ratings:

Refer to Table 1.

Replaces page 83a-f, dated May 14, 2010.
(Updated FM Approval Design Criteria to include HC-3.)

RSN: ***856463***
Permit #: ***2013-802881-CT***

January 27, 2012

TECHNICAL DATA

STANDARD/QUICK RESPONSE EXTENDED COVERAGE LIGHT AND ORDINARY HAZARD ELO SPRINKLERS

The Viking Corporation, 210 N Industrial Park Drive, Hastings MI 49058
Telephone: 269-945-9501 Technical Services: 877-384-5464 Fax: 269-818-1680 Email: techsvcs@vikingcorp.com

Accessories: (Also refer to the "Sprinkler Accessories" section of the Viking data book.)

Sprinkler Wrenches:

A. Standard Wrench: Part No. 05118CW/B (available since 1981)
B. Wrench for recessed pendent sprinkler: Part No. 11663W/B** (available since 2001)
**A ½" ratchet is required (not available from Viking).

Sprinkler Cabinets:

A. Six-head capacity: Part No. 01724A (available since 1971)
B. Twelve-head capacity: Part No. 01725A (available since 1971)

4. INSTALLATION

Refer to appropriate NFPA Installation Standards.

5. OPERATION

During fire conditions, the heat-sensitive liquid in the glass bulb expands, causing the glass to shatter, releasing the pip cap and sealing spring assembly. Water flowing through the sprinkler orifice strikes the sprinkler deflector, forming a uniform spray pattern to extinguish or control the fire.

6. INSPECTIONS, TESTS AND MAINTENANCE

Refer to NFPA 25 for Inspection, Testing and Maintenance requirements.

7. AVAILABILITY

Viking Sprinklers VK532 and VK534 are available through a network of domestic and international distributors. See The Viking Corporation web site for the closest distributor or contact The Viking Corporation.

8. GUARANTEE

For details of warranty, refer to Viking's current list price schedule or contact Viking directly.

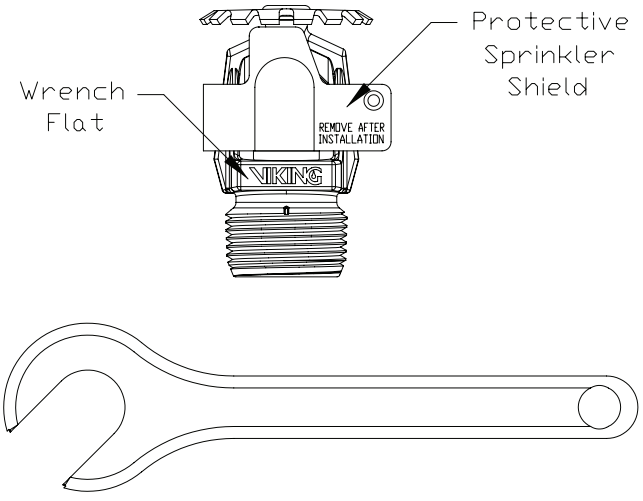

Figure 1:
Standard Sprinkler Wrench 05118CW/B

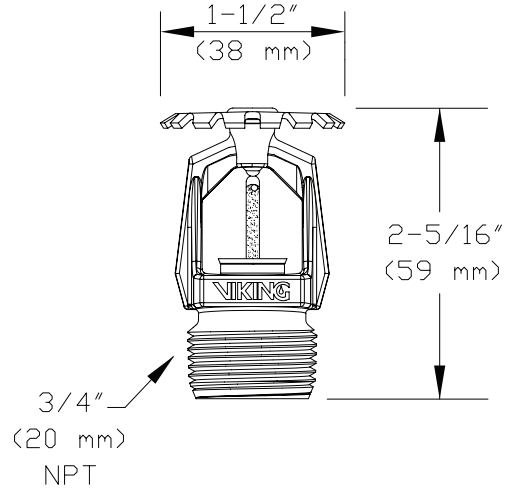

Figure 2:
Upright Sprinkler VK532

RSN: *856463*
Permit #: *2013-802881-CT*

January 27, 2012 Sprinkler 83c

TECHNICAL DATA

STANDARD/QUICK RESPONSE EXTENDED COVERAGE LIGHT AND ORDINARY HAZARD ELO SPRINKLERS

The Viking Corporation, 210 N Industrial Park Drive, Hastings MI 49058
Telephone: 269-945-9501 Technical Services: 877-384-5464 Fax: 269-818-1680 Email: techsvcs@vikingcorp.com

TABLE 1: AVAILABLE SPRINKLER TEMPERATURE RATINGS AND FINISHES

Sprinkler Temperature Classification	Sprinkler Nominal Temperature Rating[1]	Maximum Ambient Ceiling Temperature[2]	Bulb Color
Ordinary	135 °F (57 °C)	100 °F (38 °C)	Orange
Ordinary	155 °F (68 °C)	100 °F (38 °C)	Red
Intermediate	175 °F (79 °C)	150 °F (65 °C)	Yellow
Intermediate	200 °F (93 °C)	150 °F (65 °C)	Green
High	286 °F (141 °C)	225 °F (107 °C)	Blue

Sprinkler Finishes: Brass, Chrome-Enloy®, White Polyester[3], Black Polyester[3], and Black Teflon®[3]

Footnotes

[1] The sprinkler temperature rating is stamped on the deflector.

[2] Based on NFPA-13. Other limits may apply, depending on fire loading, sprinkler location, and other requirements of the Authority Having Jurisdiction. Refer to specific installation standards.

[3] For automatic sprinklers, the coatings indicated are applied to the exposed exterior surfaces only. Note that the spring is exposed on sprinklers with Polyester and Teflon® coatings. For Teflon® coated open sprinklers only, the waterway is coated.

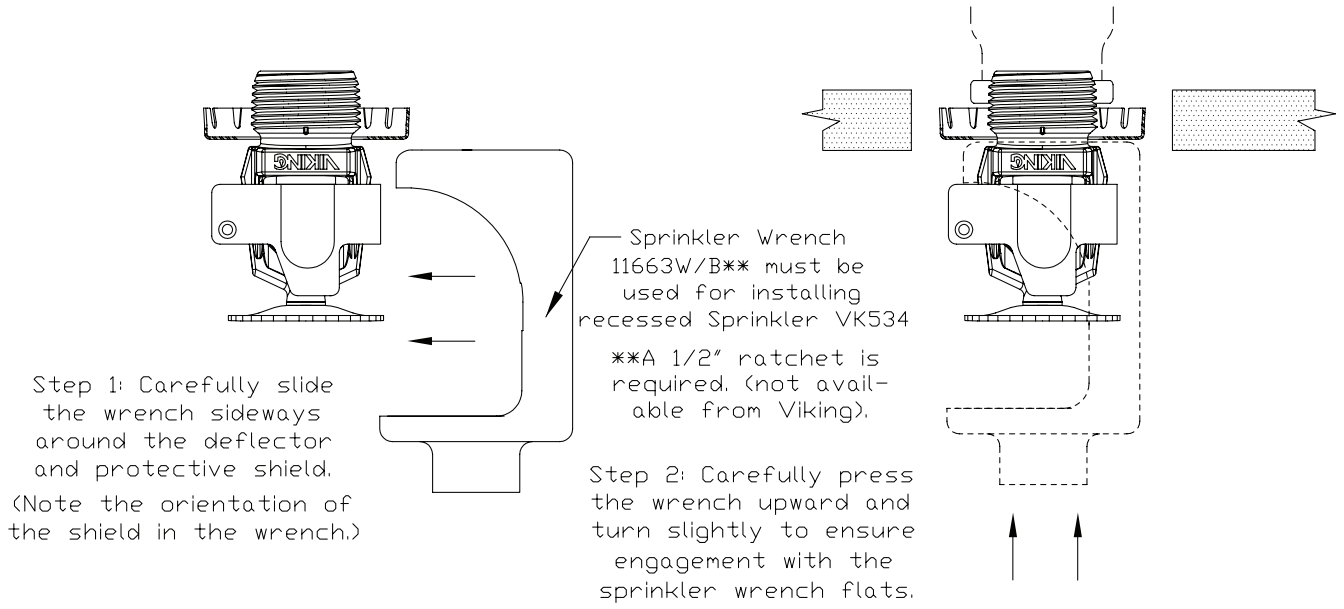

Figure 3: Wrench 11663W/B for Recessed Pendent Sprinkler VK534

RSN: *856463*
Permit #: *2013-802881-CT*

January 27, 2012

VIKING®

TECHNICAL DATA

STANDARD/QUICK RESPONSE EXTENDED COVERAGE LIGHT AND ORDINARY HAZARD ELO SPRINKLERS

The Viking Corporation, 210 N Industrial Park Drive, Hastings MI 49058
Telephone: 269-945-9501 Technical Services: 877-384-5464 Fax: 269-818-1680 Email: techsvcs@vikingcorp.com

Sprinkler Base Part Number[1]	SIN	NPT Thread Size		Nominal K-Factor		Maximum Water Working Pressure	Overall Length	
		Inches	mm	U.S.	metric[2]		Inches	mm
08687 Upright	VK532	3/4	20	11.2	161.3	175 psi (12 Bar)	2-5/16	59
08340 Pendent	VK534	3/4	20	11.2	161.3		2-3/8	61

Approval Chart 1 (UL)

EC/QREC Light and Ordinary Hazard ELO Sprinklers

KEY: Temperature, Finish, A1X ← Escutcheon (if applicable)

Max. Sprinkler Spacing (L x W[7])	Maximum Area per Sprinkler	Minimum Water Supply Requirements[7]			Listings and Approvals[3] (Refer also to Design Criteria on page 83e.)			
		Light Hazard	Ordinary Hazard Group I	Ordinary Hazard Group II	Pendent VK534		Upright VK532	
		Flow / Pressure	Flow / Pressure	Flow / Pressure	cULus[4]	NYC[5]	cULus[4]	NYC[5]
Standard Response								
16 ft. x 16 ft. (4.9 m x 4.9 m)	256 ft² (23.8 m²)	--	38 gpm @ 11.5 psi (143.9 L/min @ .79 Bar)	51 gpm @ 20.7 psi (193.1 L/min @ 1.43 Bar)	C1X, D1Y	C1X, D1Y	C1	C1
18 ft. x 18 ft. (5.5 m x 5.5 m)	324 ft² (30.1 m²)	--	49 gpm @ 19.1 psi (185.5 L/min @ 1.32 Bar)	65 gpm @ 33.7 psi (246.1 L/min @ 2.32 Bar)	C1X, D1Y	C1X, D1Y	C1	C1
20 ft. x 20 ft. (6.1 m x 6.1 m)	400 ft² (37.2 m²)	--	60 gpm @ 28.7 psi (227.1 L/min @ 1.98 Bar)	80 gpm @ 51.0 psi (302.8 L/min @ 3.52 Bar)	C1X, D1Y	C1X, D1Y	C1	C1
Quick Response								
12 ft. x 12 ft. (3.7 m x 3.7 m)	144 ft² (13.4 m²)	--	30 gpm @ 7.2 psi (113.6 L/min @ .50 Bar)	39 gpm @ 12.1 psi (147.7 L/min @ .84 Bar)	E1Y	--	E1	See Footnote 6.
14 ft. x 14 ft. (4.3 m x 4.3 m)	196 ft² (18.2 m²)	--	30 gpm @ 7.2 psi (113.6 L/min @ .50 Bar)	39 gpm @ 12.1 psi (147.7 L/min @ .84 Bar)	E1Y	--	E1	See Footnote 6.
16 ft. x 16 ft. (4.9 m x 4.9 m)	256 ft² (23.8 m²)	30 gpm @ 7.2 psi (113.6 L/min @ .50 Bar)	--	--	B1Y	--	B1	See Footnote 6.
18 ft. x 18 ft. (5.5 m x 5.5 m)	324 ft² (30.1 m²)	33 gpm @ 8.7 psi (124.9 L/min @ .60 Bar)	--	--	B1Y	--	B1	See Footnote 6.
20 ft. x 20 ft. (6.1 m x 6.1 m)	400 ft² (37.2 m²)	40 gpm @ 12.8 psi (151.4 L/min @ .88 Bar)	--	--	A1Y	--	A1	See Footnote 6.

Approved Temperature Ratings

A - 135 °F (57 °C) and 175 °F (79 °C)
B - 135 °F (57 °C), 155 °F (68 °C), and 175 °F (79 °C)
C - 155 °F (68 °C), 175 °F (79 °C), 200 °F (93 °C), and 286 °F (141 °C)
D - 155 °F (68 °C), 175 °F (79 °C), and 200 °F (93 °C)
E - 155 °F (68 °C)

Approved Finishes

1 - Brass, Chrome-Enloy®, White Polyester, Black Polyester, and Black Teflon®

Approved Escutcheons

X - Standard surface-mounted escutcheons or the Microfast® Model F-1 Adjustable Escutcheon
Y - Standard surface-mounted escutcheons or the Microfast® Model F-1 Adjustable Escutcheon, or recessed with the Micromatic® Model E-1 or E-2 Recessed Escutcheon

Footnotes

[1] Part number shown is the base part number. For complete part number, refer to current Viking price list schedule.

[2] Metric K-factor measurement shown is when pressure is measured in Bar. When pressure is measured in kPa, divide the metric K-factor shown by 10.0.

[3] This chart shows listings and approvals available at time of printing. Check with the manufacturer for any additional approvals.

[4] cULus Listed for use in the U.S. and Canada.

[5] Accepted for use, City of New York Department of Buildings, MEA 89-92-E Vol. 9.

[6] Meets New York City requirements, effective July 1, 2008.

[7] To determine "Minimum Water Supply Requirement" for areas of coverage where length and width of actual sprinkler spacing are not equal, select the "Maximum Sprinkler Spacing" from the chart that is equal to or greater than the larger of the actual spacing (length or width) dimensions used. Example: When using 10'-6" x 13'-0" sprinkler spacing, provide the "Minimum Water Supply Requirement" listed in the chart for 14'-0" x 14'-0" spacing. For areas of coverage smaller than shown, use the "Minimum Water Supply Requirement" in the appropriate hazard group for the next larger area listed. The distance from sprinklers to walls shall not exceed one-half the "Maximum Sprinkler Spacing" listed for the "Minimum Water Supply Requirement" used.

RSN: *856463*
Permit #: *2013-802881-CT*

January 27, 2012 Sprinkler 83e

TECHNICAL DATA

STANDARD/QUICK RESPONSE EXTENDED COVERAGE LIGHT AND ORDINARY HAZARD ELO SPRINKLERS

The Viking Corporation, 210 N Industrial Park Drive, Hastings MI 49058
Telephone: 269-945-9501 Technical Services: 877-384-5464 Fax: 269-818-1680 Email: techsvcs@vikingcorp.com

DESIGN CRITERIA - UL

(Also refer to Approval Chart 1.)

cULus Listing Requirements:

EC-ELO Upright Sprinkler VK532 and Pendent Sprinkler VK534 are cULus Listed as indicated in Approval Chart 1 for installation in accordance with the latest edition of NFPA 13 for extended coverage upright and pendent spray sprinklers as indicated below:

- The minimum water supplies and maximum areas of coverage shown in Approval Chart 1 are designed to provide the following design densities: 0.10 gpm/ft² (4.1 mm/min) for Light Hazard densities; 0.15 gpm/ft² (6.1 mm/min) for Ordinary-Hazard Group I densities; 0.2 gpm/ft.² (8.1 mm/min) for Ordinary-Hazard Group II densities.
- The sprinkler installation rules contained in NFPA 13 for extended coverage upright and pendent spray sprinklers must be followed.
- Viking EC-ELO Upright and Pendent Sprinklers are cULus Listed for use in unobstructed construction, and noncombustible obstructed construction consisting of solid steel and/or concrete beams as defined in the latest edition of NFPA 13.
- Ceiling slope not to exceed 2/12 (9.5°).

Also, Viking ECOH-ELO Upright Sprinkler VK532 and Pendent Sprinkler VK534 are specifically cULus Listed for Ordinary Hazard Occupancies:

- For non-combustible obstructed construction within trusses or bar joists having non-combustible web members greater than 1" (25.4 mm) when applying the 4 times obstruction criteria rule as defined in NFPA 13 under "Obstructions to Sprinkler Discharge Pattern Development".
- For installation under concrete tees when installed as follows:
  1. The stems of the concrete tee construction must be spaced between 3 ft (0.9 m) and 7 ft-6 in (2.3 m) on center. The depth of the concrete tees must not exceed 30 in (762 mm). The maximum permitted concrete tee length is 32 ft (9.8 m). However, where the concrete tee length exceeds 32 ft (9.8 m), non-combustible baffles, equal in height to the depth of the tees, can be installed so that the space between the tees does not exceed 32 ft (9.8 m).
  2. The sprinkler deflector is to be located in a horizontal plane at or above 1" (25.4 mm) below the bottom of the concrete tee stems.
  3. When the sprinkler deflector is located higher than a horizontal plane 1" (25.4 mm) beneath the bottom of the concrete tee stems, the obstruction to sprinkler discharge criteria requirements of NFPA 13 for extended coverage upright sprinklers applies.

IMPORTANT: Always refer to Bulletin Form No. F_091699 - Care and Handling of Sprinklers. Also refer to pages EC1-3 for general care, installation, and maintenance information. Viking sprinklers are to be installed in accordance with the latest edition of Viking technical data, the appropriate standards of NFPA, LPCB, APSAD, VdS or other similar organizations, and also with the provisions of governmental codes, ordinances, and standards, whenever applicable.

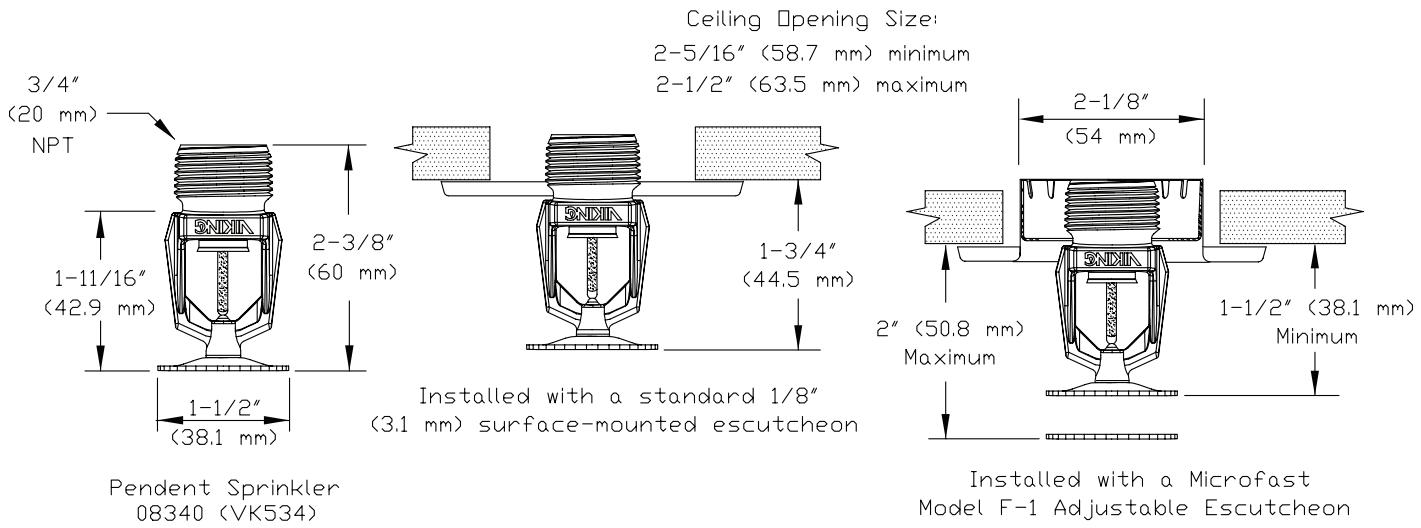

Figure 4: Sprinkler VK534 Dimensions with a Standard Escutcheon and the Model F-1 Adjustable Escutcheon

TECHNICAL DATA

STANDARD/QUICK RESPONSE EXTENDED COVERAGE LIGHT AND ORDINARY HAZARD ELO SPRINKLERS

The Viking Corporation, 210 N Industrial Park Drive, Hastings MI 49058
Telephone: 269-945-9501 Technical Services: 877-384-5464 Fax: 269-818-1680 Email: techsvcs@vikingcorp.com

Approval Chart 2 (FM)

Quick Response Extended Coverage ELO Upright Sprinkler VK532
For HC-1, HC-2, and HC-3 Occupancies
Maximum 175 PSI (12 Bar) WWP

KEY: A1X — Temperature, Finish, Escutcheon (if applicable)

Maximum Sprinkler Spacing (L x W[2])	Maximum Area per Sprinkler	Refer to Design Criteria below.	FM Approval[1] Upright Sprinkler VK532
16 ft. x 16 ft. (4.9 m x 4.9 m)	256 ft² (23.8 m²)	NOTE: FM installation guidelines may differ from cULus and/or NFPA criteria. Refer to the latest applicable FM Loss Prevention Data Sheets (including 2-0 and 3-26).	A1
18 ft. x 18 ft. (5.5 m x 5.5 m)	324 ft² (30.1 m²)		A1
20 ft. x 20 ft. (6.1 m x 6.1 m)	400 ft² (37.2 m²)		A1

Approved Temperature Ratings	Approved Finishes
A - 155 °F (68 °C), 175 °F (79 °C), 200 °F (93 °C), and 286 °F (141 °C)	1 - Brass, Chrome-Enloy®, White Polyester, and Black Polyester

Footnotes

[1] This chart shows the FM Approvals available at time of printing. Check with the manufacturer for any additional approvals.

[2] To determine "Minimum Water Supply Requirement" for areas of coverage where length and width of actual sprinkler spacing are not equal, select the "Maximum Sprinkler Spacing" from the chart that is equal to or greater than the larger of the actual spacing (length or width) dimensions used. Example: When using 10'-6" x 13'-0" sprinkler spacing, provide the "Minimum Water Supply Requirement" listed in the chart for 14'-0" x 14'-0" spacing. For areas of coverage smaller than shown, use the "Minimum Water Supply Requirement" in the appropriate hazard group for the next larger area listed. The distance from sprinklers to walls shall not exceed one-half the "Maximum Sprinkler Spacing" listed for the "Minimum Water Supply Requirement" used.

DESIGN CRITERIA - FM

(Also refer to Approval Chart 2 above.)

FM Approval Requirements:

Sprinkler VK532 is FM Approved as a quick response **Non-Storage** extended coverage upright sprinkler as indicated in the FM Approval Guide for use in occupancy hazard classifications HC-1, HC-2, and HC-3. For specific application and installation requirements, reference the latest applicable FM Loss Prevention Data Sheets (including Data Sheets 2-0 and 3-26). FM Global Loss Prevention Data Sheets contain guidelines relating to, but not limited to: minimum water supply requirements, hydraulic design, ceiling slope and obstructions, minimum and maximum allowable spacing, and deflector distance below the ceiling.

NOTE: The FM installation guidelines may differ from cULus and/or NFPA criteria.

IMPORTANT: Always refer to Bulletin Form No. F_091699 - Care and Handling of Sprinklers. Also refer to page EC1-3 for general care, installation, and maintenance information. Viking sprinklers are to be installed in accordance with the latest edition of Viking technical data, the appropriate standards of NFPA, FM Global, LPCB, APSAD, VdS or other similar organizations, and also with the provisions of governmental codes, ordinances, and standards, whenever applicable.

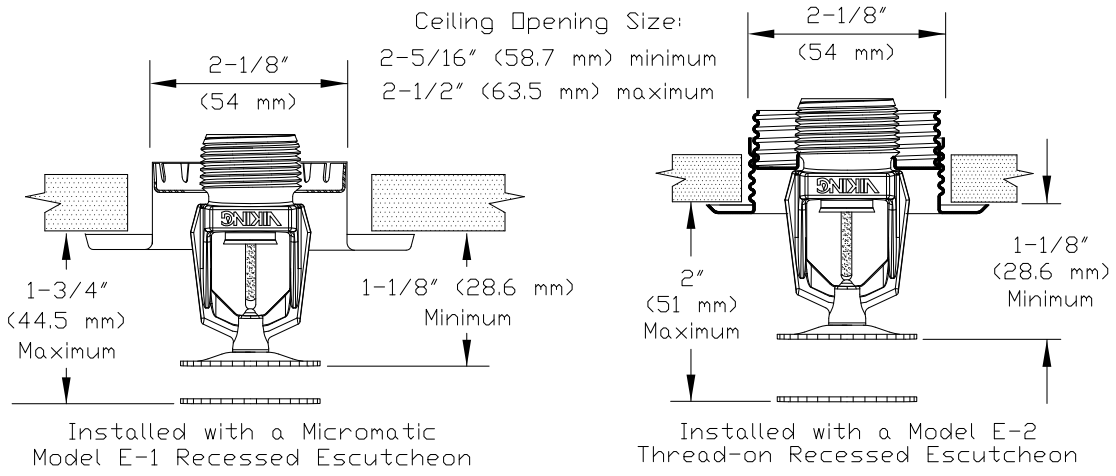

Figure 5: Sprinkler VK534 Dimensions with the Model E-1 and E-2 Recessed Escutcheons

RSN: 856463
Permit #: 2013-802881-CT

allied TUBE & CONDUIT



With ABF Protection

DYNA THREAD®

Dyna-Thread®

RSN: *856463*
Permit #: *2013-802881-CT*

Full Line Sch-40 Replacement

Dyna-Thread® offers the life expectancy of Sch-40 with superior hydraulics and greater value.

Dyna-Thread sprinkler pipe represents an engineering advancement for the sprinkler pipe industry. It combines the safety and longevity of traditional Sch-40 pipe with quality and superior hydraulic advantages.

Comparison to Schedule 40

- Dyna-Thread's inside diameter is up to 3.6% larger than Sch-40 giving it superior hydraulics. And, when used in combination with Dyna-Flow pipe, down sizing often occurs.
- Dyna-Thread is fully listed and approved by UL, ULC, and FM for fire sprinkler applications.
- The life expectancy of Dyna-Thread and Sch-40 are equal based on the calculated wall thicknesses per UL.
- The consistent quality of steel used to make Dyna-Thread facilitates smooth threading and lower maintenance costs.
- The exterior of Dyna-Thread is protected by a clean, durable mill coating for extended shelf life and easy paint application.
- With its increased strength and lighter weight, Dyna-Thread reduces installation fatigue and is ideal for retro-fit applications.

Corrosion Resistance Ratio (CRR) is a UL (Underwriters Laboratory) term for the estimated life expectancy of a pipe joint. This is based on the calculated wall thickness at the base of the first exposed thread, assumed to be the weakest point of the pipe length. Dyna-Thread and Sch-40 have the same calculated wall thicknesses at this point and are both assigned the same CRR of 1.00.

The internal surface of all black Allied Tube & Conduit Fire Sprinkler pipe products up to 4.5000" in diameter is coated with our new Antibacterial Formula, "ABF". In scientific laboratory test, ABS proved to have superior resistance to microbial colonization of pipe walls, thereby delaying or possibly preventing the onset of Microbiologically Influenced corrosion (MIC) when the First Sprinkler System is first installed.

Listed Approved Listed

Comparison to L.W.T. Pipes

- More wall thickness at the thread (CRR=1.00) gives Dyna-Thread better life expectancy than lightwall threadable pipe joints.
- Unlike lightwall threadable pipe, Dyna-Thread has no thread gauge warning.
- Dyna-Thread is approved for standard hanger spacing (15 ft. O.C.), can be used as earthquake sway bracing, and is safe to use as drops.
- Dyna-Thread is safer to weld on.
- Dyna-Thread is more widely accepted than lightwall threadable where Sch-40 is specified.

Specifications & Approvals

Super 40/Dyna-Thread pipe is manufactured to meet: ASTM A-135, Grade A and is in compliance with NFPA-13. All sizes of Super 40/Dyna-Thread are rated at 300 psi working pressure. Super 40/Dyna-Thread is UL and ULC Listed for wet, dry deluge and pre-action sprinkler systems and FM Approved for use in wet systems. Super 40/Dyna-Thread can be "hot-dip" galvanized to meet FM requirement for dry systems. Super 40/Dyna-Thread is approved for all threaded couplings and welded outlets and is suitable for all roll-grooved, and plain-end fittings. (See listing information).

Specifications

NPS *In; mm*	Nominal I.D. *In; mm*	Wt. *Lbs/Ft; Kg/m*	Wt. (H2O Filled) *Lbs/Ft; Kg/m*	Pcs/ *Lift*	Wt/Lift (21') *Lbs; Kg*	Wt/Lift (24') *Lbs; Kg*	Wt/Lift (25') *Lbs; Kg*
1"	1.080	1.330	1.75	70	1955	2234	2327
25	*27.4*	*2.0*	*2.60*	*70*	*887*	*1013*	*1056*
1¼"	1.408	1.870	2.54	51	2002	2288	2384
32	*35.8*	*2.8*	*3.78*	*51*	*908*	*1038*	*1081*
1½"	1.639	2.290	3.22	44	2115	2418	2519
40	*41.6*	*3.4*	*4.79*	*44*	*959*	*1097*	*1143*
2"	2.104	3.050	4.57	30	1921	2196	2287
50	*53.4*	*4.5*	*6.80*	*30*	*871*	*996*	*1037*

tyco / Flow Control
allied TUBE & CONDUIT
16100 S. Lathrop • Harvey, IL 60426
11350 Norcom Rd. • Philadelphia, PA 19154
2525 N. 27 th Ave. • Phoenix, AZ 85009
Customer Service:
(800) 882-5543
Fax 708-339-1806

RSN: ***856463***
Permit #: ***2013-802881-CT***

90° ELBOW

ANVILStar™
Fire Products Division of Anvil International

SPF/ANVIL®

Ductile Iron



MATERIAL SPECIFICATIONS

Ductile iron threaded fittings are UL & ULC Listed & Factory Mutual Approved for 500 psi service.

Ductile iron per ASTM A536 Class 65-45-12.

Dimensions conform to ASME B16.14

Threads are NPT per ANSI/ASME B1.20.1.

NOTICE: Ductile iron fittings have higher tensile strength than that of steel pipe. Therefore, over tightening can cause damage to pipe threads which may cause leakage. Ductile iron fittings should be tightened three turns beyond hand tight, but no more than four turns.

UL FM ULC
APPROVED

For Listing/Approval Details and Limitations visit our Web Site *www.anvilintl.com* or contact an Anvil®/AnvilStar™ Sales Representative.

90° ELBOW

Nominal Size	Anvil Item Number	Universal Number	Max. Working Pressure*	Dimensions		Approx. Wt. Each
				A	B	
In. (mm)			*PSI (kPa)*	*In. (mm)*	*In. (mm)*	*Lbs. (kg)*
1 *20*	840000004	DB90033	500 *3450*	1.50 *38.10*	1.50 *38.10*	0.62 *0.28*
1¼ *32*	840000012	DB90044	500 *3450*	1.75 *44.45*	1.75 *44.45*	0.90 *0.41*
1½ *40*	840000020	DB90055	500 *3450*	1.94 *49.276*	1.94 *49.276*	1.20 *0.54*
2 *50*	840000038	DB90066	500 *3450*	2.25 *57.15*	2.25 *57.15*	1.85 *0.84*

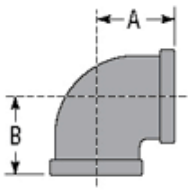

* UL, ULC & FM Pressure Ratings

For additional listings and approvals, see the technical data section.

Style 922
FireLock™ Outlet-T

RSN: ***856463***
Permit #: ***2013-802881-CT***

PRODUCT DESCRIPTION



See Victaulic publication 10.01 for details.

The Style 922 Outlet-T provides a convenient method of incorporating ½, ¾, and 1" (15, 20 and 25 mm) outlets for directly connecting sprinkler heads, drop nipples, sprigs, gauges, drains and other outlet products. Available for 1¼ through 2½" (32 to 65 mm) piping systems, Style 922 outlets are UL/ULC Listed, LPC, Vds/FM approved for branch connections on wet and dry systems.

The locating collar engages into the hole prepared in the pipe. When tightened, the assembly compresses the gasket onto the OD of the pipe. Style 922 Outlet-T is rated to 175 psi (1200 kPa) for fire protection systems.

Style 922 is suitable for use on standard, lightwall, Schedule 5 and other specialty pipes.* It is supplied with a clear, rust inhibitive coating. Contact Victaulic for other optional coatings.

*Consult Section 10.01 for specific listings/approvals.

DIMENSIONS

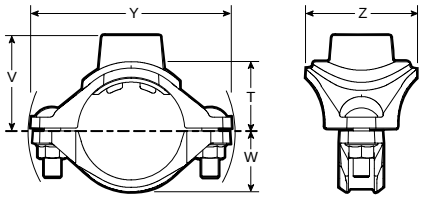

Nominal Size inches/mm Run × Branch FPT†	Required Hole Saw Size	Dimensions – inches/millimeters T*	V	W	Y	Z	Approx. Weight Each lbs/kg
1¼ × ½	1⅜₁₆	1.30	1.83	1.10	3.87	2.56	1.0
32 × 15	30,2	33,0	46,5	27,9	98,3	65,0	0,45
1¼ × ¾	1⅜₁₆	1.28	1.83	1.10	3.87	2.56	1.1
32 × 20	30,2	32,5	46,5	27,9	98,3	65,0	0,50
1¼ × 1	1⅜₁₆	1.52	2.18	1.10	3.87	2.56	1.2
32 × 25	30,2	38,6	55,4	27,9	98,3	65,0	0,54
1½ × ½	1⅜₁₆	1.42	1.95	1.22	4.08	2.56	1.2
40 × 15	30,2	36,1	49,5	31,0	103,6	65,0	0,54
1½ × ¾	1⅜₁₆	1.40	1.95	1.22	4.08	2.56	1.2
40 × 20	30,2	35,6	49,5	31,0	103,6	65,0	0,54
1½ × 1	1⅜₁₆	1.64	2.30	1.22	4.08	2.56	1.3
40 × 25	30,2	41,7	58,4	31,0	103,6	65,0	0,59
2 × ½	1⅜₁₆	1.66	2.19	1.46	4.60	2.56	1.3
50 × 15	30,2	42,2	55,6	37,1	116,8	65,0	0,59
2 × ¾	1⅜₁₆	1.64	2.19	1.46	4.60	2.56	1.4
50 × 20	30,2	41,7	55,6	37,1	116,8	65,0	0,64
2 × 1	1⅜₁₆	1.88	2.54	1.46	4.60	2.56	1.5
50 × 25	30,2	47,8	64,5	37,1	116,8	65,0	0,68
2½ × ½	1⅜₁₆	1.91	2.44	1.71	5.40	2.56	1.6
65 × 15	30,2	48,5	62,0	43,4	137,2	65,0	0,73
2½ × ¾	1⅜₁₆	1.89	2.44	1.71	5.40	2.56	1.6
65 × 20	30,2	48,0	62,0	43,4	137,2	65,0	0,73
2½ × 1	1⅜₁₆	2.13	2.79	1.71	5.40	2.56	1.6
65 × 25	30,2	54,1	70,9	43,4	137,2	65,0	0,73

Victaulic female threaded products are designed to accommodate standard NPT or BSPT (optional) male pipe threads only. Use of male threaded products with special features, such as probes, dry pendent sprinkler heads, etc., should be verified as suitable for use with this Victaulic product. Failure to verify suitability in advance may result in assembly problems or leakage.
*Center of run to engaged pipe end for NPT threads (dimensions are approximate).

VICTAULIC® IS AN ISO 9001 CERTIFIED COMPANY

Victaulic Company of America
Phone: 1-800-PICK-VIC (1-800-742-5842)
Fax: 610-250-8817
e-mail:pickvic@victaulic.com

Victaulic Company of Canada
Phone: 416-675-5575
Fax: 416-675-5565
e-mail: viccanada@victaulic.com

Victaulic Europe
Phone:32-9-381-1500
Fax: 32-9-380-4438
e-mail: viceuro@victaulic.be

Victaulic America Latina
Phone: 610-559-3300
Fax: 610-559-3608
e-mail: vical@victaulic.com

Victaulic Asia Pacific
Phone: 65-235-3035
Fax: 65-235-0535
e-mail: vicap@victaulic.com

® Registered Trademark of Victaulic
© Copyright 2002 Victaulic
Printed in U.S.A.

RSN: ***856463***
Permit #: ***2013-802881-CT***

PERFORMANCE

Nominal Size Inches/mm	Equivalent Length of 1" Pipe Feet meters
1¼ × 1 32 × 25	8.5 2,6
1½ × 1 40 × 25	8.5 2,6
2 × 1 50 × 25	8.5 2,6
2½ × 1 65 × 25	8.5 2,6

MATERIAL SPECIFICATIONS

Housing: Ductile iron conforming to ASTM A-395, grade 65-45-15, and ASTM A-536, grade 65-45-12

Gasket:

❑ **Grade "E" EPDM - Type A** (Violet color code). FireLock products have been Listed by Underwriters Laboratories Inc. and Approved by Factory Mutual Research for wet and dry (oil free air) sprinkler services up to the rated working pressure using the Grade "E" Type A Gasket System.

Bolts/Nuts: Heat treated carbon steel zinc electroplated track head bolt with a minimum tensile strength of 110,000 psi (758340 kPa). Flanged hex nut, zinc electroplated.

This product shall be manufactured by Victaulic Company. All products shall be installed in accordance with current Victaulic installation/assembly instructions.
Victaulic reserves the right to change product specifications, designs and standard equipment without notice and without incurring obligations.

RSN: ***856463***
Permit #: ***2013-802881-CT***

TOLCO
INCORPORATED
CORONA, CA (909)737-5599

Fig. 65 and Fig. 66
Reversible C-Type Beam Clamps
3/4 and 1-1/4 Inch Throat Openings

Size Range **– (Fig. 65 and Fig. 66) 3/8, 1/2, AND 5/8 inch rod.**
Material **– Carbon Steel with hardened cup point set screw and jam nut.**
Function **– Recommended for hanging from steel beam where flange thickness does not exceed 3/4 inch (Fig. 65) or 1-1/4" (Fig. 66)**
Features **– All steel construction eliminates structural deficiencies associated with casting type beam clamps. May be used on top or bottom flange of the beam. (Beveled lip allows hanging from top flange where clearance is limited.) May be installed with set screw in up or down position. Offset design permits unlimited rod adjustment by allowing the rod to be threaded completely through the clamp. Open design permits inspection of thread engagement.**
Approvals **– Underwriters' Laboratories Listed in the USA (UL) and Canada (cUL). Factory Mutual Engineering Approved. Conforms to Federal Specification Society SP-69, type 19 and 23. Exceeds requirements of the National Fire Protection Association (NFPA), Pamphlet #13, 3/8 inch rod will support 1/2 thru 4 inch pipe, 1/2 inch rod will support 1/2 thru 8 inch pipe.**
Finish **– Plain.**
Note—Available in Electro-Galvanized and HDG finish.
Order **By—Figure number, rod size, and finish.**
Fig. 65 Patent #4,570,885

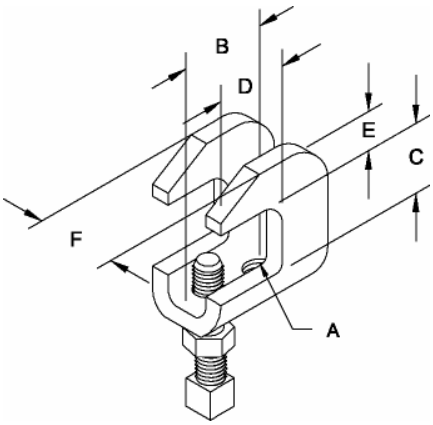

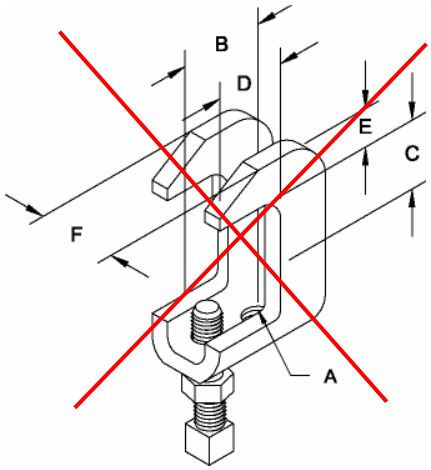

FIG. 65 TABLE

ROD SIZE A	B	C	D	E	F	MAX. REC. LOAD LBS.*	APPROX WT./100
3/8	1-3/16	3/4	1	7/16	1	610	28
1/2	1-1/2	3/4	1	9/16	1-1/4	1130	55
5/8	1-1/2	3/4	1	9/16	1-1/4	1130	55

*Max. loads for clamp with set screw in up or down position.

FIG. 66 TABLE

ROD SIZE A	B	C	D	E	F	MAX. REC. LOAD LBS.*	APPROX WT./100
3/8	1-3/16	1-1/4	1	7/16	1	610	28
1/2	1-1/2	1-1/4	1	9/16	1-1/4	1130	55
5/8	1-1/2	1-1/4	1	9/16	1-1/4	1130	55

*Max. loads for clamp with set screw in up or down position.

TOLCO
INCORPORATED
CORONA, CA (909)737-5599

Fig. 98
Rod Stiffener

Size **Range—Secures 3/8 thru 7/8 inch hanger rod.**
Material **– Carbon Steel.**
Function—Secures channel to hanger rod for vertical seismic bracing.
Finish—Electro Galvanized.
Order **By—Figure number.**
Note—Available in HDG finish or Stainless Steel materials.

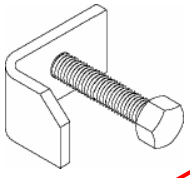

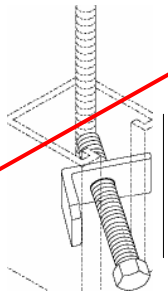

Fig. 99
All Thread Rod Cut To Length

Size Range-3/8 **thru 7/8 inch rod in 1 inch increments.**
Material **– Carbon Steel.**
Maximum Temperature-750°F.
Finish **— Plain.**
Order **By—Figure number, rod diameter, rod length, and finish.**
Note—Available in Electro-Galvanized and HDG finish or Stainless Steel materials.

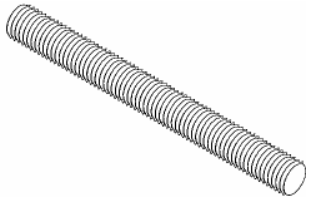

ROD SIZE	MAX. REC. LOAD LBS. FOR SERVICE TEMPS 650°F	750°F
3/8	610	540
1/2	1130	1010
5/5	1810	1610
3/4	2710	2420
7/8	3770	3360

Fig. 100
All Thread Rod Full Lengths

Size Range-3/8 **thru 7/8 inch rod in 10 foot lengths.**
Material **– Carbon Steel.**
Maximum Temperature-750°F.
Finish **— Plain.**
Order **By—Figure number, rod diameter, and finish. Note—Available in Electro-Galvanized and HDG finish or Stainless Steel materials.**

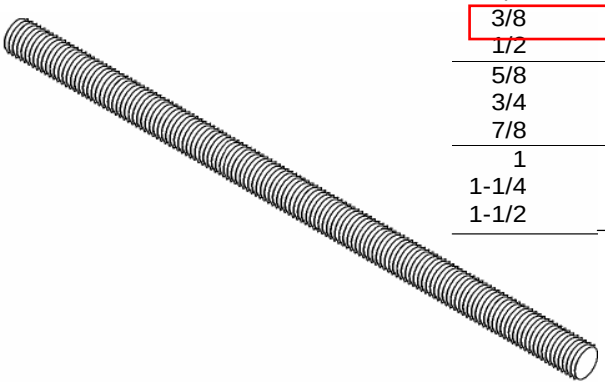

ROD SIZE	MAX. REC. LOAD LBS. FOR SERVICE TEMPS 650°F	750°F	APPROX. WEIGHT PER 100FT.
1/4	240	215	12
3/8	610	540	29
1/2	1130	1010	53
5/8	1810	1610	84
3/4	2710	2420	123
7/8	3770	3360	169
1	4960	4420	222
1-1/4	8000	7140	360
1-1/2	11630	10370	510

RSN: ***856463***
Permit #: ***2013-802881-CT***

Tolco
INCORPORATED
CORONA, CA (909)737-5599

Fig. 200

®C® *"Trimline" Adjustable Band Hanger*

Size Range — 1/2 thru 8 inch pipe.
Material — Carbon Steel, Mil. Galvanized to G-90 specifications.
Function — For fire sprinkler and other general piping purposes. Knurled swivel nut design permits hanger adjustment after installation.
Features
• (1/2 thru 2 inch) Flared edges ease installation for all pipe types and protect CPVC plastic pipe from abrasion. Captured design keeps adjusting nut from separating with hanger. Hanger is easily installed around pipe.
• (2-1/2 thru 8 inch) Spring tension on nut holds it securely in hanger before installation. Adjusting nut is easily removed.
Approvals— Underwriters' Laboratories Listed (1/2" thru 8") in the U.S. (UL) and Canada (cUL) for steel and CPVC plastic pipe and Factory Mutual Engineering Approved (3/4" thru 8"). Conforms to Federal Specifications WW-H-171 E, Type 10, and Manufacturers Standardization Society SP-69, type 10.
Maximum Temperature - 650°F.
Finish — Mil. Galvanized, for Stainless Steel materials order Tolco Fig. 200WON.
Order By— Figure number and pipe size.

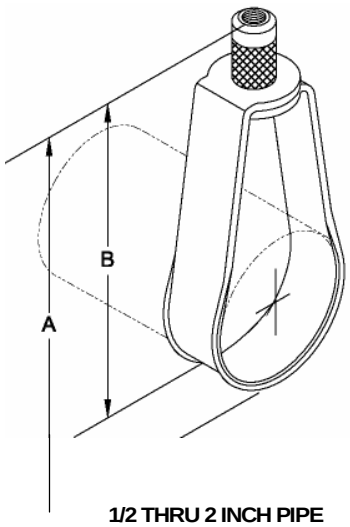

1/2 THRU 2 INCH PIPE

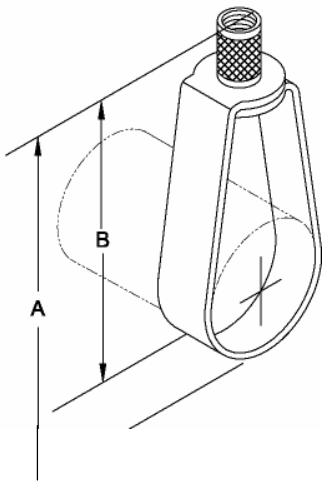

2 1/2 THRU 8 INCH PIPE

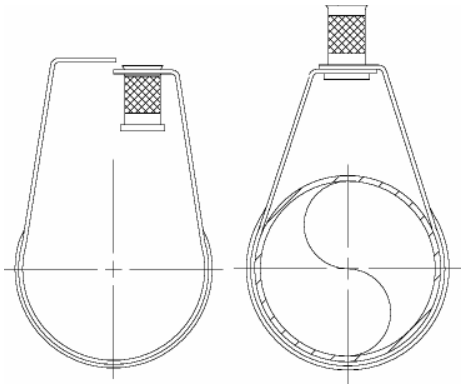

PIPE SIZE	ROD SIZE INCH	ROD SIZE METRIC*	A	B	MAX. REC. LOAD LBS.	APPROX. WT./100
1/2	3/8	8mm or 10mm	3-1/8	2-5/8	400	11
3/4	3/8	8mm or 10mm	3-1/8	2-1/2	400	11
1	3/8	8mm or 10mm	3-3/8	2-5/8	400	12
1-1/4	3/8	8mm or 10mm	3-3/4	2-7/8	400	13
1-1/2	3/8	8mm or 10mm	3-7/8	2-7/8	400	14
2	3/8	8mm or 10mm	4-1/2	3	400	15
2-1/2	3/8	10mm	5-5/8	4-1/8	600	27
3	3/8	10mm	5-7/8	4	600	29
3-1/2	3/8	10mm	7-3/8	5-1/4	600	34
4	3/8	10mm	7-3/8	5	1000	35
5	1/2	12mm	9-1/8	6-1/4	1250	66
6	1/2	12mm	10-1/8	6-3/4	1250	73
8	1/2	12mm	13-1/8	8-3/4	1250	136

*Order Fig. 200M