NOTE: NO WORK IN HATCHED AREA.
ALL PROTECTION TO REMAIN AS-IS

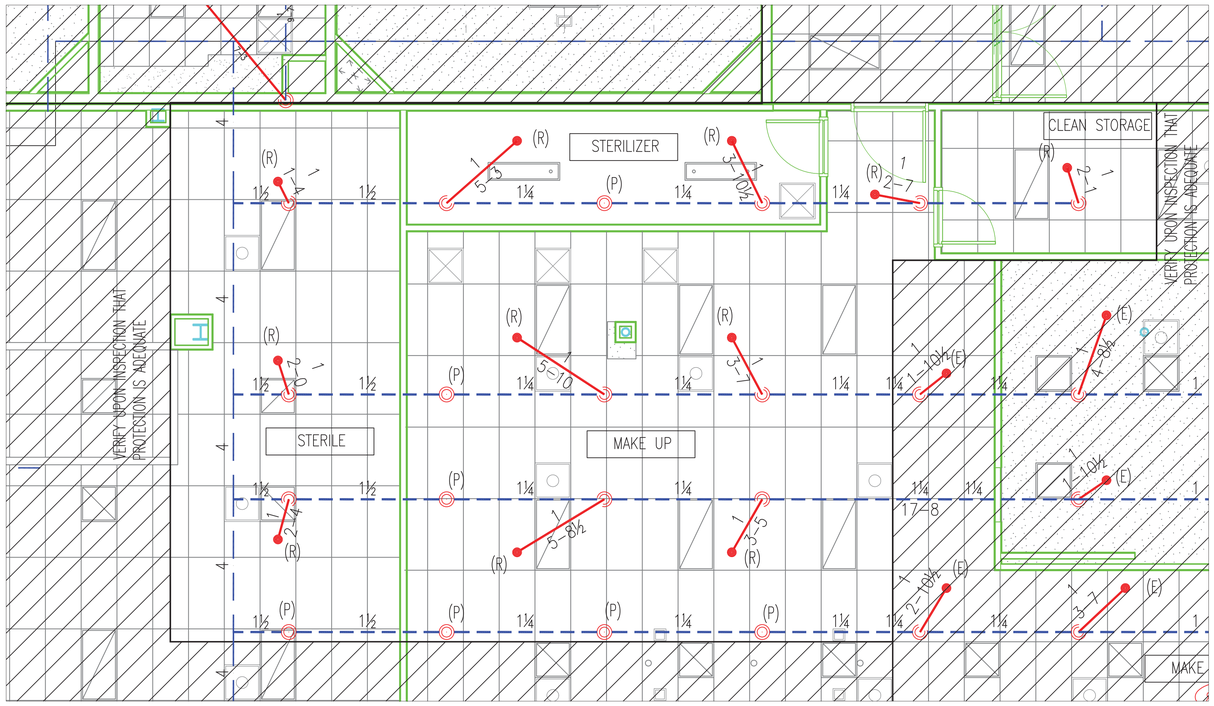

PHASE V (AREA B) FIRE SPRINKLER PLAN
1/4" = 1'-0"

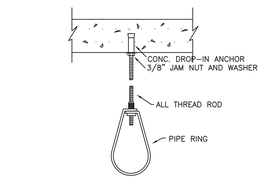

DROP-IN CONC. ANCHOR

HANGER

PIPE HANGER NOTE

MAXIMUM HANGER SPACING FOR 1½" THRU 3" PIPE IS 15'-Ø"
MAXIMUM HANGER SPACING FOR 1" THRU 1¼" PIPE IS 12'-Ø"
PRESSURE EXCEEDS 100 PSI THEREFORE HOLD-DOWN CLIPS ARE REQUIRED ON THE END HANGER TO PREVENT UPWARD MOVEMENT ALSO ANY ARMOVER THAT EXCEEDS 12" IN LENGTH WILL REQUIREA PIPE HANGER AND THAT HANGER MUST HAVE A HOLD-DOWN CLIP.

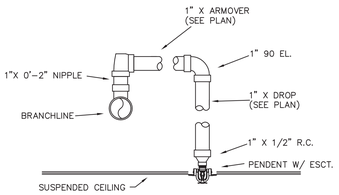

RETURN BEND ASSEMBLY

HANGER SPACING LEGEND — PER NFPA 13 TABLE 9.2.2.1 (a)

NOMINAL PIPE SIZE	¾"	1"	1¼"	1½"	2"	2½"	3"	4"	6"	8"
STEEL PIPE: SCH 10/40 DYNAFLOW, EDDYFLOW	N/A	12-0	12-0	15-0	15-0	15-0	15-0	15-0	15-0	15-0
THREADED LIGHTWALL	N/A	12-0	12-0	12-0	12-0	12-0	N/A	N/A	N/A	N/A

UNSUPPORTED LENGTHS-PER NFPA 2013 9.2.3.4
MAXIMUM UNSUPPORTED LENGTH BETWEEN THE LAST HANGER ON A BRANCH LINE AND THE SPRINKLER, FOR PRESSURES UNDER 100 PSI:

1" STEEL PIPE 36"
1¼" STEEL PIPE 48"
1½" & LARGER STEEL PIPE 60"

WHEN THESE LIMITS ARE EXCEEDED THE PIPE SHALL BE EXTENDED BEYOND THE END SPRINKLER AND SHALL BE SUPPORTED BY AN ADDITIONAL HANGER.

THE CUMULATIVE HORIZONTAL LENGTH OF AN ARMOVER TO A SPRINKLER, SPRINKLER DROP OR SPRINKLER SPRIG SHALL NOT EXCEED 24" FOR STEEL PIPE.

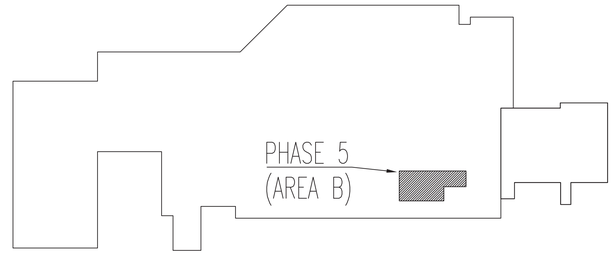

SCOPE OF WORK

WORK IS TO START AT EXISTING SPRINKLER SYSTEM OUTLETS. WORK WILL CONSIST OF RELOCATING EXISTING SPRINKLERS TO NEW CEILING AND WALL LAYOUT.

GENERAL NOTES

1. SPRINKLER SYSTEM DESIGN, PER 2016 NFPA 13
   * LIGHT HAZARD – OFFICE, CORRIDOR, RESTROOMS AND SIMILAR
   * ORDINARY HAZARD GROUP II – MECHANICAL, STORAGE AREAS
2. WET SYSTEM THREADED PIPING, SIZES 1" – 2":
   SCH 40 BLACK PIPE WITH BLACK D.I. FITTINGS.
3. WET SYSTEM WELDED PIPING, SIZES 1¼" – 4":
   SCH 10 BLACK PIPE WITH WELDED OUTLETS AND/OR MECHANICAL TEES WITH FACTORY PAINTED GROOVED FITTINGS.
4. PIPE HANGERS PER 2016 NFPA 13 – HANG ARMOVERS GREATER THAN 2'-0".
5. SEAL PIPE PENETRATIONS THROUGH FIRE RATED WALLS WITH HILTI FS-ONE FIRE STOP.
6. CENTER PENDENT HEADS AT QUARTER POINT OF CEILING TILE.
7. OWNER TO MAINTAIN BUILDING AT A MINIMUM TEMPERATURE OF 40 DEGREES.

LEGEND

NEW PIPE –
EXISTING PIPE–
R=RELOCATE – 11
P=PLUG

TRACY SKINNER
CERTIFIED ENGINEERING TECHNICIAN
WATER-BASED FIRE PROTECTION SYSTEMS
NICET #97029 - LEVEL III
Tracy Skinner
Digitally signed by Tracy Skinner
DN: cn=Tracy Skinner, o=Frontier Fire Protection, Inc., ou=Tracy Skinner, email=tracy@frontierfireprotection.com, c=US
Reason: I have reviewed this document
Date: 2017.08.08 07:03:35-06'00'

2 1 0 4 8
SCALE 1/4"=1'-0"

1ST FLOOR (PHASE 5B)

Frontier Fire
2617 W Holden Pl, Denver CO 80204 | Phn 303-629-0221, Fax 303-623-7830
www.frontierfireprotection.com

Fire Sprinkler Plan Symbols

Symbol	Description
○	Hydraulic Reference Points
[xx Bts]	Elev. Below Top of Steel
[xx-x]	Elev. Above Finished Flocg
(TOS 20-Ø)	Elev. of Top of Steel
8-6	Ceiling Height
—/—	Denotes Hanger Location
O RN 1"x 6-0	Rise up or down
– –o– – –	Existing pipe and outlet
– –●R– –	New Head Location

Number of Sprinklers

Total This Sheet: Symbol	Degree	Description	Total This Job: SIN	K-Fact.	Thread	Quantity
●	155°	CHROME RECESSED PENDENT QR.	VK302	5.6	1/2"	11

		Revisions:	By:	Date:
Drawing Title	FIRE SPRINKLER PLAN			
Contract No.	15-3910			
File Name:	15-3910			
Drawn By	SHANE PARRIOTT			
Scale	AS SHOWN			
Date	08-01-2017			
Approval By	AHJ			

Job:
MEDICAL CENTER OF AURORA
1501 S. POTOMAC ST.
AURORA, CO. 80012

Contractor:
FRONTIER FIRE
2617 W. HOLDEN PLACE
DENVER, CO 80204

FP 1 OF 1
PLOT DATE 08-01-2017

City of Aurora Building Division
Counter Permit intake by: TAC
Date: Aug 10, 2017
RSN: 1229834
Permit: 2017-1340902-CT
2015 INTERNATIONAL CODES & 2017 NEC Scope of permit to be field verified

Frontier Fire

August 9, 2017

Aurora Building and Development Department
15151 E. Alameda Pkwy.
Aurora, CO. 80012

RE: ***MCOA Renovation 1501 S. Potomac St.***

To whom it may concern,

The work being perform on the fire sprinkler system during this phase, does not negatively affected the hydraulic calculation of the system, therfore there are no hydraulic calculation being provided with this submittal.

Sincerely Yours,
Frontier Fire Protection

Shane Parriott
Designing Engineer / PM

Frontier Fire

AUTOMATIC FIRE SPRINKLER SYSTEM

EQUIPMENT SUBMITTALS

FOR

MCOA RENOVATION PHASE V B

1501 S POTOMAC STREET

AURORA, COLORADO 80012

MICROFAST® AND MicrofastHP® QUICK RESPONSE PENDENT SPRINKLERS

TECHNICAL DATA

The Viking Corporation, 210 N Industrial Park Drive, Hastings MI 49058
Telephone: 269-945-9501 Technical Services: 877-384-5464 Fax: 269-818-1680 Email: techsvcs@vikingcorp.com

1. DESCRIPTION

Viking Microfast® and MicrofastHP® Quick Response Pendent Sprinklers are small, thermosensitive, glass-bulb spray sprinklers available in several different finishes and temperature ratings and K-Factors to meet design requirements. The special Polyester,Polytetrafluoroethylene (PTFE), and Electroless Nickel PTFE (ENT) coatings can be used in decorative applications where colors are desired. In addition, these coatings have been investigated for installation in corrosive atmospheres and are listed/approved as corrosion resistant as indicated in the Approval Charts. (Note: **FM Global approves ENT finish as corrosion resistant.** FM Global has no approval classification for PTFE and Polyester coatings as corrosion resistant.)

PN 12979 **PN 06666B**

2. LISTINGS AND APPROVALS

cULus Listed: Category VNIV
FM Approved: Classes 2001, 2002, 2015, and 2017
NYC Approved: Calendar Number 219-76-SA and MEA 89-92-E, Volume 16
ABS Certified: Certificate 04-HS407984C-PDA
VdS Approved: Certificates G4040095, G4040097, G4060056, G4060057, G4880045, G4930038, and G4980021
LPC Approved: Ref. Nos. 096e/03 and 096e/04
CE Certified: Standard EN 12259-1, EC-certificates of conformity 0786-CPD-40130, 0786-CPD-40170 and 0786-CPD-40279, 0832-CPD-2001, and 0832-CPD-2003
MED Certified: Standard EN 12259-1, EC-certificate of conformity 0832-MED-1003 and 0832-MED-1008
NOTE: Other International approval certificates are available upon request.

Refer to Approval Chart 1 and Design Criteria on page 41d for cULus Listing requirements and refer to Approval Chart 2 and Design Criteria on page 41f for FM Approval requirements that must be followed.

3. TECHNICAL DATA

Specifications:
Available since 1987.
Minimum Operating Pressure: 7 psi (0.5 bar)*
Maximum Working Pressure: Sprinklers 12282 and 12290 are rated for use with water working pressures ranging from the minimum 7 psi (0.5 bar) up to 250 psi (17 bar) for high-pressure systems. High-pressure (HP) sprinklers can be identified by locating "250" stamped on the deflector. All other Part Nos. not mentioned above are rated to a maximum 175 psi (12 bar) wwp.
Factory tested hydrostatically to 500 psi (34.5 bar)
Thread size: Refer to the Approval Charts
Nominal K-Factor: Refer to the Approval Charts
Glass-bulb fluid temperature rated to -65 °F (-55 °C)
Overall Length: Refer to the Approval Charts

Viking Technical Data may be found on The Viking Corporation's Web site at http://www.vikinggroupinc.com. The Web site may include a more recent edition of this Technical Data Page.

*cULus Listing, FM Approval, and NFPA 13 installs require a minimum of 7 psi (0.5 bar). The minimum operating pressure for LPCB and CE Approvals ONLY is 5 psi (0.35 bar).

Material Standards:
Frame Casting: Brass UNS-C84400 or QM Brass for Sprinklers 12979 and 12282. Brass UNS-C84400 for all other sprinklers.
Deflector: Phosphor Bronze UNS-C51000 or Copper UNS-C19500 for Sprinklers 12979, 06666B, and 06765B. Copper UNS-C19500 for Sprinkler 12282. Phosphor Bronze UNS-C51000, Copper UNS-C19500 or Brass UNS-C26000 for Sprinkler 06720B. Brass UNS-C26000 for all other Sprinklers.
Bushing (for Sprinklers 06718B, 06720B, and 12290): Brass UNS-C36000
Bulb: Glass, nominal 3 mm diameter
Belleville Spring Sealing Assembly: Nickel Alloy, coated on both sides with PTFE Tape
Screw: Brass UNS-C36000
Pip Cap and Insert Assembly: Copper UNS-C11000 and Stainless Steel UNS-S30400
For PTFE Coated Sprinklers: Belleville Spring-Exposed, Screw-Nickel Plated, Pip Cap-PTFE Coated
For Polyester Coated Sprinklers: Belleville Spring-Exposed
For ENT Coated Sprinklers: Belleville Spring-Exposed, Screw and Pipcap - ENT coated.

Permit: 2017-1340962-CT
RSN: 1229834

The Viking Corporation, 210 N Industrial Park Drive, Hastings MI 49058
Telephone: 269-945-9501 Technical Services: 877-384-5464 Fax: 269-818-1680 Email: techsvcs@vikingcorp.com

Ordering Information: (Also refer to the current Viking price list.)
Order Microfast® and MicrofastHP® Quick Response Pendent Sprinklers by first adding the appropriate suffix for the sprinkler finish and then the appropriate suffix for the temperature rating to the sprinkler base part number.
Finish Suffix: Brass = A, Chrome = F, White Polyester = M-/W, Black Polyester = M-/B, Black PTFE = N, and ENT = JN
Temperature Suffix: 135 °F (57 °C) = A, 155 °F (68 °C) = B, 175 °F (79 °C) = D, 200 °F (93 °C) = E, and 286 °F (141 °C) = G
For example, sprinkler VK302 with a 1/2" thread, Brass finish and a 155 °F (68 °C) temperature rating = Part No. 12979AB

Available Finishes And Temperature Ratings:

Refer to Table 1.

Accessories: (Also refer to the "Sprinkler Accessories" section of the Viking data book.)

Sprinkler Wrenches:

A. Standard Wrench: Part No. 10896W/B (available since 2000).
B. Wrench for Recessed Pendent Sprinklers: Part No. 16036W/B* (available since 2011)
C. Optional Protective Sprinkler Cap Remover/Escutcheon Installer Tool** Part No. 15915 (available since 2010.)
*A ½" ratchet is required (not available from Viking).
**Allows use from the floor by attaching a length of 1" diameter CPVC tubing to the tool. Ideal for sprinkler cabinets. Refer to Bulletin F_051808.

Sprinkler Cabinets:

A. Six-head capacity: Part No. 01724A (available since 1971)
B. Twelve-head capacity: Part No. 01725A (available since 1971)

4. INSTALLATION

Refer to appropriate NFPA Installation Standards.

5. OPERATION

During fire conditions, the heat-sensitive liquid in the glass bulb expands, causing the glass to shatter, releasing the pip cap and sealing spring assembly. Water flowing through the sprinkler orifice strikes the sprinkler deflector, forming a uniform spray pattern to extinguish or control the fire.

6. INSPECTIONS, TESTS AND MAINTENANCE

Refer to NFPA 25 for Inspection, Testing and Maintenance requirements.

7. AVAILABILITY

The Viking Microfast® and MicrofastHP® Quick Response Pendent Sprinklers are available through a network of domestic and international distributors. See The Viking Corporation web site for the closest distributor or contact The Viking Corporation.

8. GUARANTEE

For details of warranty, refer to Viking's current list price schedule or contact Viking directly.

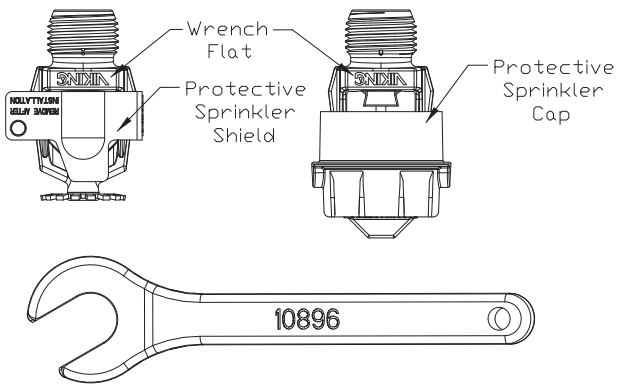

Figure 1: Standard Sprinkler Wrench 10896W/B

VIKING®

TECHNICAL DATA

MICROFAST® AND MicrofastHP® QUICK RESPONSE PENDENT SPRINKLERS

The Viking Corporation, 210 N Industrial Park Drive, Hastings MI 49058
Telephone: 269-945-9501 Technical Services: 877-384-5464 Fax: 269-818-1680 Email: techsvcs@vikingcorp.com

TABLE 1: AVAILABLE SPRINKLER TEMPERATURE RATINGS AND FINISHES

Sprinkler Temperature Classification	Sprinkler Nominal Temperature Rating[1]	Maximum Ambient Ceiling Temperature[2]	Bulb Color
Ordinary	135 °F (57 °C)	100 °F (38 °C)	Orange
Ordinary	155 °F (68 °C)	100 °F (38 °C)	Red
Intermediate	175 °F (79 °C)	150 °F (65 °C)	Yellow
Intermediate	200 °F (93 °C)	150 °F (65 °C)	Green
High	286 °F (141 °C)	225 °F (107 °C)	Blue

Sprinkler Finishes: Brass, Chrome, White Polyester, Black Polyester, Black PTFE, and ENT

Corrosion-Resistant Coatings[3]: White Polyester, Black Polyester, and Black PTFE. ENT in all temperature ratings except 135 °F (57 °C).

Footnotes

[1] The sprinkler temperature rating is stamped on the deflector.

[2] Based on NFPA-13. Other limits may apply, depending on fire loading, sprinkler location, and other requirements of the Authority Having Jurisdiction. Refer to specific installation standards.

[3] The corrosion-resistant coatings have passed the standard corrosion test required by the approving agencies indicated in the Approval Charts. These tests cannot and do not represent all possible corrosive environments. Prior to installation, verify through the end-user that the coatings are compatible with or suitable for the proposed environment. For automatic sprinklers, the coatings indicated are applied to the exposed exterior surfaces only. Note that the spring is exposed on sprinklers with Polyester, PTFE, and ENT coatings. For ENT coated automatic sprinklers, the waterway is coated.

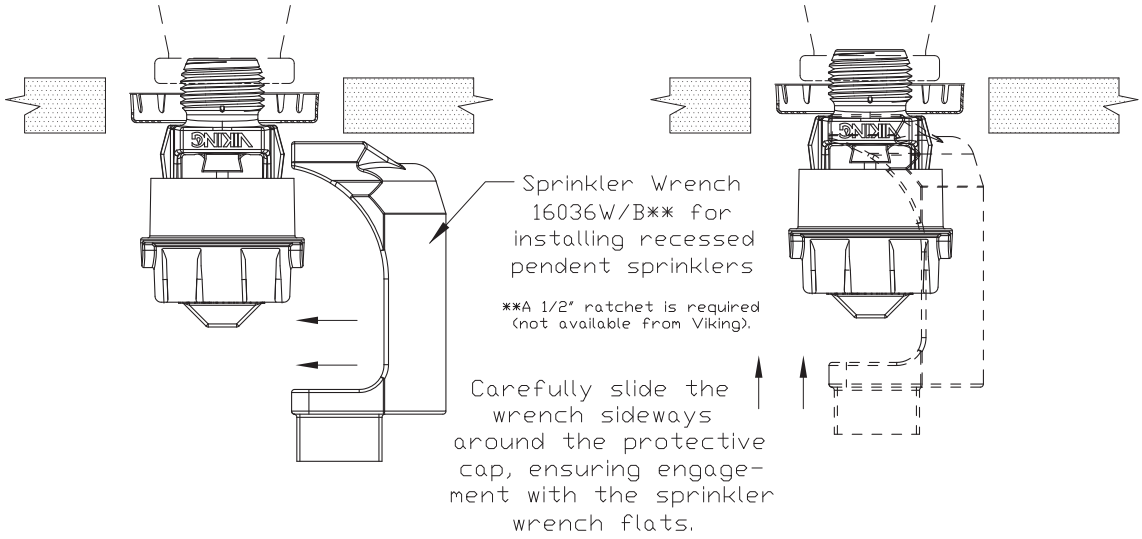

Figure 2: Wrench 16036W/B for Recessed Pendent Sprinklers

VIKING®

TECHNICAL DATA

MICROFAST® AND MicrofastHP® QUICK RESPONSE PENDENT SPRINKLERS

The Viking Corporation, 210 N Industrial Park Drive, Hastings MI 49058
Telephone: 269-945-9501 Technical Services: 877-384-5464 Fax: 269-818-1680 Email: techsvcs@vikingcorp.com

Approval Chart 1 (UL)

Microfast® and MicrofastHP® Quick Response Pendent Sprinklers
Maximum 175 PSI (12 bar) WWP

KEY: A1X — A = Temperature, 1 = Finish, X = Escutcheon (if applicable)

Sprinkler Base Part No.[1]	SIN	Thread Size		Nominal K-Factor		Overall Length		Listings and Approvals[3] (Refer also to Design Criteria on page 41e.)					
		NPT	BSP	U.S.	metric[2]	Inches	mm	cULus[4]	NYC[5]	VdS	LPCB	CE	
Standard Orifice													
12979	VK302	1/2”	15 mm	5.6	80.6	2-1/4”	57	A1X, B1Y, C4, E4Z	A1X, B1Y	--	--	--	--
18021	VK302	1/2”	15 mm	5.6	80.6	2-1/4”	58	A1X, B1Y	A1X, B1Y	A2	A2X, B2Y	C2X, E2Y[11]	C2X, E2Y[14]
Large Orifice													
06666B	VK352	3/4”	20 mm	8.0	115.2	2-3/8”	60	A1X, B1Y, C4, E4Z	A1X, B1Y	A2	A2X	C2[11]	--
06765B[15]	VK352	1/2”	15 mm	8.0	115.2	2-3/8”	60	A1X, B1Y, C4, E4Z	A1X, B1Y	A2	--	A2[12]	--
Small Orifice[8]													
06718B[9]	VK329	1/2”	15 mm	2.8	40.3	2-3/16”	56	A1X, B1Y	A1X, B1Y	--	--	--	--
06720B[9]	VK331	1/2”	15 mm	4.2	57	2-1/4”	58	A1X, B1Y	A1X, B1Y	--	--	--	--
06932B	VK331	--	10 mm	4.2	57	2-3/8”	60	--	--	A2	--	G3[13]	--
Maximum 250 PSI (17 bar) WWP Standard Orifice													
Sprinkler Base Part No[1]	**SIN**	**Thread Size**		**Nominal K-Factor**		**Overall Length**		**Listings and Approvals[3] (Refer also to Design Criteria on page 41e.)**					
		NPT	**BSP**	**U.S.**	**metric[2]**	**Inches**	**mm**	**cULus[4]**	**NYC[10]**	**VdS**	**LPCB**	**CE**	
12282	VK317	1/2”	15 mm	5.6	80.6	2-1/4”	58	A1X, B1Y	A1X	--	--	--	--
Maximum 250 PSI (17 bar) WWP Small Orifice[9]													
12290[10]	VK342	1/2”	15 mm	2.8	40.3	2-3/16”	56	A1X, B1Y	A1X	--	--	--	--

Approved Temperature Ratings

A - 135 °F (57 °C), 155 °F (68 °C), 175 °F (79 °C), 200 °F (93 °C), and 286 °F (141 °C)
B - 135 °F (57 °C), 155 °F (68 °C), 175 °F (79 °C), and 200 °F (93 °C)
C - 155 °F (68 °C), 175 °F (79 °C), 200 °F (93 °C), and 286 °F (141 °C)
D - 135 °F (57 °C), 155 °F (68 °C), 175 °F (79 °C), and 286 °F (141 °C)
E - 155 °F (68 °C), 175 °F (79 °C), and 200 °F (93 °C)
F - 155 °F (68 °C), 175 °F (79 °C), and 286 °F (141 °C)
G - 155 °F (68 °C)

Approved Finishes

1 - Brass, Chrome, White Polyester[6,7], Black Polyester[6,7], and Black PTFE[6]
2 - Brass, Chrome, White Polyester[7], and Black Polyester[7]
3 - Brass and Chrome
4 - ENT[6]

Approved Escutcheons

X - Standard surface-mounted escutcheon or the Viking Microfast® Model F-1 Adjustable Escutcheon
Y - Standard surface-mounted escutcheon or the Viking Microfast® Model F-1 Adjustable Escutcheon **or** recessed with the Viking Micromatic® Model E-1, E-2, or E-3 Recessed Escutcheon
Z - Standard surface-mounted escutcheon or recessed with the Viking Micromatic® Model E-1

Footnotes

[1] Base part number is shown. For complete part number, refer to Viking’s current price schedule.
[2] Metric K-factor measurement shown is when pressure is measured in Bar. When pressure is measured in kPa, divide the metric K-factor shown by 10.0.
[3] This table shows the listings and approvals available at the time of printing. Check with the manufacturer for any additional approvals.
[4] Listed by Underwriters Laboratories Inc. for use in the U.S. and Canada.
[5] Accepted for use, City of New York Board of Standards and Appeals, Calendar Number 219-76-SA.
[6] cULus Listed as corrosion resistant.
[7] Other colors are available on request with the same Listings and Approvals as the standard colors.
[8] Listings and Approvals limited to Light Hazard Occupancies where allowed by the installation standards being applied, with hydraulically calculated wet systems only. **Exception:** 4.2K sprinklers may be installed on hydraulically calculated dry pipe systems where piping is corrosion resistant or internally galvanized.
[9] The sprinkler orifice is bushed.
[10] Accepted for use, City of New York Department of Buildings, MEA Number 89-92-E, Vol. 16.
[11] CE Certified, Standard EN 12259-1, EC-certificates of conformity 0832-CPD-2001 and 0832-CPD-2003.
[12] CE Certified, Standard EN 12259-1, EC-certificate of conformity 0786-CPD-40279.
[13] CE Certified, Standard EN 12259-1, EC-certificate of conformity 0786-CPD-40130 and 0786-CPD-40170.
[14] MED Certified, Standard EN 12259-1, EC-certificates of conformity 0832-MED-1003 and 0832-MED-1008.
[15] The 1/2” NPT Large Orifice Sprinkler is Listed and Approved for retrofit only.

VIKING®	TECHNICAL DATA	MICROFAST® AND MicrofastHP® QUICK RESPONSE PENDENT SPRINKLERS

The Viking Corporation, 210 N Industrial Park Drive, Hastings MI 49058
Telephone: 269-945-9501 Technical Services: 877-384-5464 Fax: 269-818-1680 Email: techsvcs@vikingcorp.com

DESIGN CRITERIA - UL

(Also refer to Approval Chart 1 on page 41d)

cULus Listing Requirements:

Microfast® and MicrofastHP® Quick Response Pendent Sprinklers are cULus Listed as indicated in the Approval Chart for installation in accordance with the latest edition of NFPA 13 for standard spray sprinklers.

- Designed for use in Light and Ordinary Hazard occupancies *(exception: small orifice sprinklers are limited to Light Hazard where allowed by the installation standards being applied, with hydraulically calculated wet systems only).*
- The sprinkler installation rules contained in NFPA 13 for standard spray pendent sprinklers must be followed.

IMPORTANT: Always refer to Bulletin Form No. F_091699 - Care and Handling of Sprinklers. Also refer to page QR1-3 for general care, installation, and maintenance information. Viking sprinklers are to be installed in accordance with the latest edition of Viking technical data, the appropriate standards of NFPA, LPCB, APSAD, VdS or other similar organizations, and also with the provisions of governmental codes, ordinances, and standards, whenever applicable.

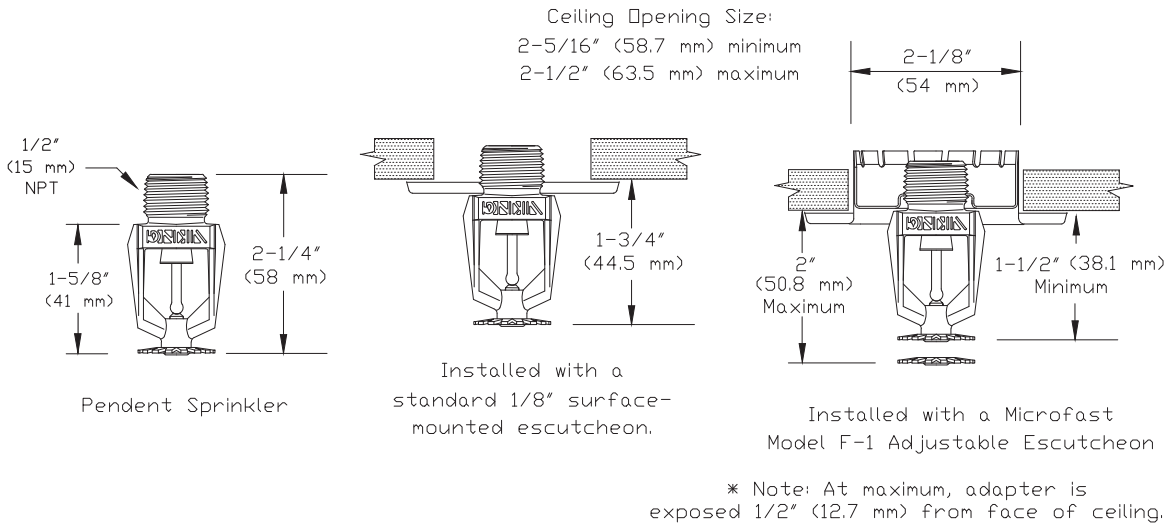

Figure 3: Sprinkler VK302 Dimensions with a Standard Escutcheon and the Model F-1 Adjustable Escutcheon

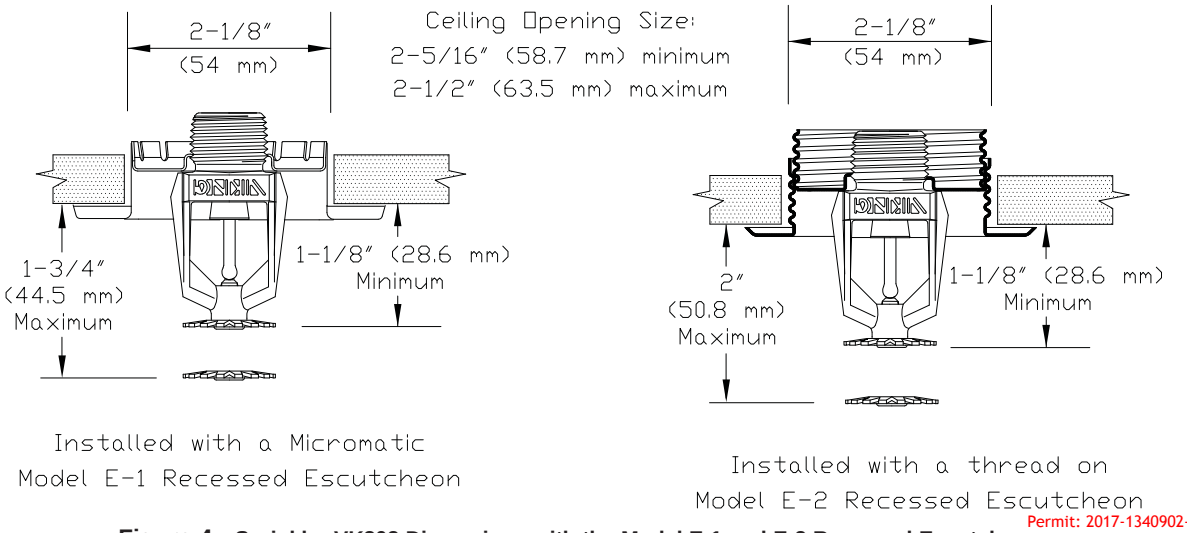

Figure 4: Sprinkler VK302 Dimensions with the Model E-1 and E-2 Recessed Escutcheons

Permit: 2017-1340902-CT
RSN: 1229834

VIKING®

TECHNICAL DATA

MICROFAST® AND MicrofastHP® QUICK RESPONSE PENDENT SPRINKLERS

The Viking Corporation, 210 N Industrial Park Drive, Hastings MI 49058
Telephone: 269-945-9501 Technical Services: 877-384-5464 Fax: 269-818-1680 Email: techsvcs@vikingcorp.com

Approval Chart 2 (FM)

Microfast® Quick Response Pendent Sprinklers
Maximum 175 PSI (12 bar) WWP

KEY: Temperature, Finish, A1X ← Escutcheon (if applicable)

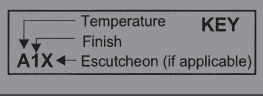

Sprinkler Base Part No.[1]	SIN	Thread Size		Nominal K-Factor		Overall Length		FM Approvals[3] (Refer also to Design Criteria below.)
		NPT	BSP	U.S.	metric[2]	Inches	mm	
Standard Orifice								
12979	VK302	1/2”	15 mm	5.6	80.6	2-1/4”	57	A2X, B2Y, C3, D3Z
18021	VK302	1/2”	15 mm	5.6	80.6	2-1/4”	58	A2X, B2Y
Large Orifice								
06666B	VK352	3/4”	20 mm	8.0	115.2	2-3/8”	60	A2X, B2Y, C3, D3Z
06765B[7]	VK352	1/2”	15 mm	8.0	115.2	2-3/8”	60	A2X, B2Y, C3, D3Z
Small Orifice[4]								
06718B[6]	VK329	1/2”	15 mm	2.8	40.3	2-3/16”	56	A1X

Approved Temperature Ratings

A - 135 °F (57 °C), 155 °F (68 °C), 175 °F (79 °C), 200 °F (93 °C), and 286 °F (141 °C)
B - 135 °F (57 °C), 155 °F (68 °C), 175 °F (79 °C), and 200 °F (93 °C)
C- 155 °F (68 °C), 175 °F (79 °C), 200 °F (93 °C), and 286 °F (141 °C)
D - 155 °F (68 °C), 175 °F (79 °C), and 200 °F (93 °C)

Approved Finishes

1 - Brass and Chrome
2 - Brass, Chrome, White Polyester[5], and Black Polyester[5]
3 - ENT[8]

Approved Escutcheons

X - Standard surface-mounted escutcheon or the Viking Microfast® Model F-1 Adjustable Escutcheon
Y - Standard surface-mounted escutcheon or the Viking Microfast® Model F-1 Adjustable Escutcheon **or** recessed with the Viking Micromatic® Model E-1, E-2, or E-3 Recessed Escutcheon
Z - Standard surface-mounted escutcheon or recessed with the Viking Micromatic® Model E-1

Footnotes

[1] Base part number is shown. For complete part number, refer to Viking’s current price schedule.
[2] Metric K-factor measurement shown is when pressure is measured in Bar. When pressure is measured in kPa, divide the metric K-factor shown by 10.0.
[3] This table shows the listings and approvals available at the time of printing. Check with the manufacturer for any additional approvals.
[4] FM Approved as quick response control mode standard spray **Non-storage** sprinklers. For specific application and installation requirements, reference the latest applicable FM Loss Prevention Data Sheets (including Data Sheet 2-0).
[5] Other colors are available on request with the same Listings and Approvals as the standard colors.
[6] The sprinkler orifice is bushed.
[7] The 1/2” NPT Large Orifice Sprinkler is Listed and Approved for retrofit only.
[8] FM approved as corrosion resistant.

DESIGN CRITERIA - FM

(Also refer to Approval Chart 2 above.)

FM Approval Requirements:

The sprinklers indicated in Approval Chart 2 are FM Approved as quick response **Non-storage** standard spray pendent sprinklers as indicated in the FM Approval Guide†. For specific application and installation requirements, reference the latest applicable FM Loss Prevention Data Sheets (including Data Sheets 2-0 and 8-9). FM Global Loss Prevention Data Sheets contain guidelines relating to, but not limited to: minimum water supply requirements, hydraulic design, ceiling slope and obstructions, minimum and maximum allowable spacing, and deflector distance below the ceiling.

NOTE: The FM installation guidelines may differ from cULus and/or NFPA criteria.

†Sprinklers VK302 and VK352 are also FM Approved as quick response **Rack Storage** standard spray pendent sprinklers. Refer to technical data page 131a-e for Intermediate Level In-Rack Sprinklers.

IMPORTANT: Always refer to Bulletin Form No. F_091699 - Care and Handling of Sprinklers. Also refer to page QR1-3 for general care, installation, and maintenance information. Viking sprinklers are to be installed in accordance with the latest edition of Viking technical data, the appropriate standards of NFPA, FM Global, LPCB, APSAD, VdS or other similar organizations, and also with the provisions of governmental codes, ordinances, and standards, whenever applicable.

Permit: 24-7-1 RAD-C-CT
RSN: 1229834
Page 9 of 20

STEEL FIRE SPRINKLER PIPE

Schedule 10 and Schedule 40

Wheatland Tube
JMC STEEL GROUP

Permit: 2017-1340902-CT
RSN: 1229834

High Quality, High Performance, Long-Lasting

Wheatland's Schedule 10 and Schedule 40 steel fire sprinkler pipe have set the industry's standards for years. Both products are subjected to the toughest possible testing to assure the highest possible quality and reliable, long-lasting performance.

Each is coated with Wheatland's proprietary mill coating to assure a clean, corrosion- and heat-resistant surface that outperforms and outlasts standard lacquer coatings. The coating also allows the pipe to be easily painted, without special preparation.

You can order Schedule 10 or Schedule 40 in black, or with hot-dip galvanizing, to meet FM requirements for dry systems to meet the zinc coating specifications of ASTM A795 or A53.

Both Schedule 10 and 40 are UL and FM listed and meet NFPA 13 standards. We coat all of our black products up to 6" with our patented MIC Shield™ coating, which helps protect against the onset of microbial corrosion (MIC). Our MIC Shield was the first coating to be approved by FM as compatible with hybrid sprinkler systems that include CPVC plastic pipe in mixed use occupancies. MIC Shield is also chemically compatible with Flow Guard Gold®, Blaze Master® and Corizan® CPVC.

Why Wheatland?

- Experience: We've manufactured fire sprinkler pipe since 1955
- We product the most complete line of products in the industry
- We offer a number of proprietary products and unique benefits
- We provide a complete line of coatings:
  - in-house, hot dip galvanizing
  - black sprinkler pipe
  - MIC shield™, the first FM global approved factory applied, anti-microbial coating for use with CPVC plastic pipe systems
  - proprietary mill coatings that provide corrosion and heat resistant properties
  - proprietary mill coatings that extend shelf life

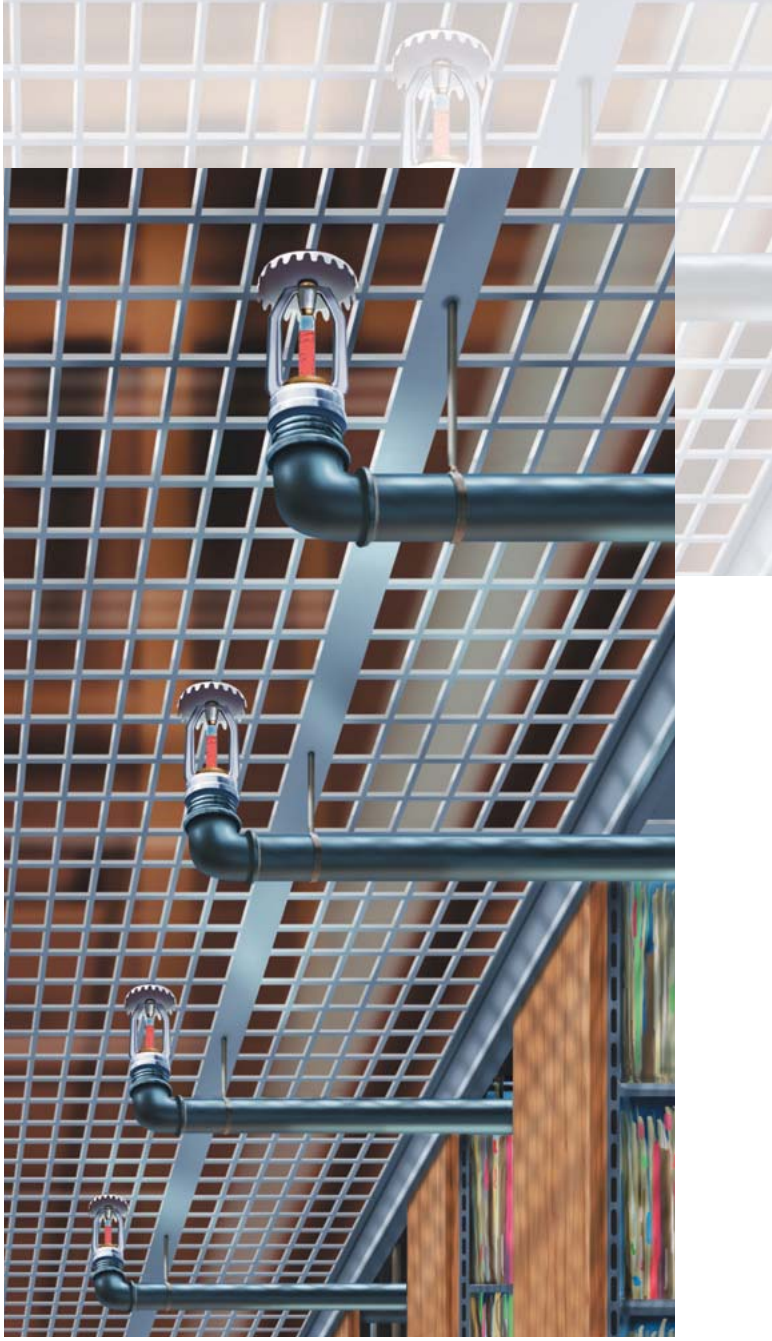

Schedule 10 and 40 Meet or Exceed These Standards

- UL & C-UL Listed
- FM Approved
- ASTM A135, Grade A (Schedule 10)
- ASTM A795, type E, Grade A (Schedule 40)

Green: The steel used to produce Wheatland's sprinkler pipe contains recycled steel and is virtually totally recyclable.

Seismic/Sway Bracing: Wheatland sprinkler pipe data tables are available for determining the forces for piping used as a sway brace component or in Seismic applications.

Schedule 10 and Schedule 40 Charts

Schedule 10 Specifications

NPS	Nominal O.D.		Nominal I.D.		Nominal Wall		Nominal Weight		UL	Pieces
	in.	mm	in.	mm	in.	mm	lbs./ft.	kg/m	CRR*	Lift
1 1/4	1.660	42.2	1.442	36.6	.109	2.77	1.81	2.69	7.3	61
1 1/2	1.900	48.3	1.682	42.7	.109	2.77	2.09	3.11	5.8	61
2	2.375	60.3	2.157	54.8	.109	2.77	2.64	3.93	4.7	37
2 1/2	2.875	73.0	2.635	66.9	.120	3.05	3.53	5.26	3.5	30
3	3.500	88.9	3.260	82.8	.120	3.05	4.34	6.46	2.6	19
4	4.500	114.3	4.260	108.2	.120	3.05	5.62	8.37	1.6	19
5	5.563	141.3	5.295	134.5	.134	3.40	7.78	11.58	1.5	13
6	6.625	168.3	6.357	161.5	.134	3.40	9.30	13.85	1.0	10

* Calculated using Standard UL CRR formula, UL Fire Protection Directory, Category VIZY
* The CRR is a ratio value used to measure the ability of a pipe to withstand corrosion. Threaded Schedule 40 steel pipe is used as the benchmark (value of 1.0).

Schedule 40 Specifications

NPS	Nominal O.D.		Nominal I.D.		Nominal Wall		Nominal Weight		UL	Pieces
	in.	mm	in.	mm	in.	mm	lbs./ft.	kg/m	CRR*	Lift
1″	1.315	33.4	1.049	26.6	.133	3.38	1.68	2.50	1.00	70
1 1/4″	1.660	42.2	1.380	35.1	.140	3.56	2.27	3.39	1.00	51
1 1/2″	1.900	48.3	1.610	40.9	.145	3.68	2.72	4.05	1.00	44
2″	2.375	60.3	2.067	52.5	.154	3.91	3.66	5.45	1.00	30

* Calculated using Standard UL CRR formula, UL Fire Protection Directory, Category VIZY
* The CRR is a ratio value used to measure the ability of a pipe to withstand corrosion. Threaded Schedule 40 steel pipe is used as the benchmark (value of 1.0).

Weights/Dimensions Black Plain End

Nominal Size	O.D. Inches	Sch. 40		Sch. 80	
		Wall Inches	Wt. Lb./Ft.	Wall Inches	Wt. Lb./Ft.
1/8″	.405	.068	.24	.095	.31
1/4″	.540	.088	.43	.119	.54
3/8″	.675	.091	.57	.126	.74
1/2″	.840	.109	.85	.147	1.09
3/4″	1.050	.113	1.13	.154	1.48
1″	1.315	.133	1.68	.179	2.17
1-1/4″	1.660	.140	2.27	.191	3.00
1-1/2″	1.900	.145	2.72	.200	3.63
2″	2.375	.154	3.66	.218	5.03
2-1/2″	2.875	.203	5.80	.276	7.67
3″	3.500	.216	7.58	.300	10.26
3-1/2″	4.000	.226	9.12	.318	12.52
4″	4.500	.237	10.80	.337	15.00

Technical Data Charts

PRODUCT NPS	NOM. I.D.	WT/FT LBS	WT/FT H_2O FILLED	PCS/ LIFT	WT/LIFT 21'	WT/LIFT 24'	WT/LIFT 25'
Schedule 10							
1 1/4"	1.442	1.807	2.514	61	2,315	2,645	2,756
1 1/2"	1.682	2.087	3.049	61	2,673	3,055	3,183
2"	2.157	2.640	4.222	37	2,051	2,344	2,442
2 1/2"	2.635	3.534	5.895	30	2,226	2,544	2,651
3"	3.260	4.336	7.949	19	1,730	1,977	2,060
4"	4.260	5.619	11.789	19	2,242	2,562	2,669
5"	5.295	7.780	17.309	13	2,124	2,427	2,529
6"	6.357	9.298	23.038	10	1,953	2,232	2,325
Schedule 40							
1"	1.049	1.681	2.055	70	2,471	2,824	2,942
1 1/4"	1.380	2.275	2.922	51	2,437	2,785	2,901
1 1/2"	1.610	2.720	3.602	44	2,513	2,872	2,992
2"	2.067	3.656	5.109	30	2,303	2,632	2,742

SMITH-COOPER®
INTERNATIONAL

Ductile Iron Threaded Fittings

Specifications

- SCI Branded Ductile Iron Threaded Fittings are UL Listed and FM Approved at 500 psi
- Rated to 300 WSP
- Ductile Iron Castings conform to ASTM A536
- Fitting dimensions conform to ASME B16.3
- Bushings and Plugs conform to ASME B16.14
- Fittings are 100% air tested
- NPT threads on all fittings conform to ASME B1.20.1
- Independent lab verification that fittings meet applicable chemical & physical properties
- Manufacturing facilities are ISO 9001:2008 and ISO 14001

c UL us LISTED

FM APPROVED

Temperature Degrees F	Working Pressure, Nonshock psiG 300# Class Threaded Fittings
-20 to 100	500
150	500
200	480
250	460
300	440
350	420
400	400
450	380
500	360
550	340
600	320
650	300

Permit: 2017-1340902-CT
RSN: 1229834
Page 13 of 20

c UL us LISTED FM APPROVED

Fig. 35E 3 – 90° Elbow

Size IN	Part Number	List Price	Packing	Weight LB
1/2	35E 3004	$8.88	100/200	0.2317
3/4	35E 3006	$9.30	70/140	0.3681
1	35E 3010	$10.69	40/80	0.5361
1-1/4	35E 3012	$16.85	25/50	0.8516
1-1/2	35E 3014	$24.35	18/36	1.1312
2	35E 3020	$36.83	10/20	1.8344
2-1/2	35E 3024	$80.65	4/8	3.3755

Fig. 35RE3 – 90° Reducing Elbow

Size IN	Part Number	List Price	Packing	Weight LB
3/4 x 1/2	35RE3006004	$17.45	80/160	0.3071
1 x 1/2	35RE3010004	$13.23	70/140	0.4242
1 x 3/4	35RE3010006	$14.20	50/100	0.5038
1-1/4 x 1/2	35RE3012004	$23.60	35/70	0.5509
1-1/4 x 3/4	35RE3012006	$25.06	35/70	0.6455
1-1/4 x 1	35RE3012010	$20.95	30/60	0.7680
1-1/2 x 1/2	35RE3014004	$40.24	30/60	0.6351
1-1/2 x 3/4	35RE3014006	$32.46	25/50	0.7726
1-1/2 x 1	35RE3014010	$29.16	20/40	0.8991
1-1/2 x 1-1/4	35RE3014012	$29.16	18/36	0.9962
2 x 1/2	35RE3020004	$68.26	18/36	0.9680
2 x 3/4	35RE3020006	$48.92	18/36	1.0782
2 x 1	35RE3020010	$47.57	16/32	1.2214
2 x 1-1/4	35RE3020012	$63.72	12/24	1.3961
2 x 1-1/2	35RE3020014	$47.57	10/20	1.5233
2-1/2 x 1-1/2	35RE3024014	$125.03	6/12	2.2376
2-1/2 x 2	35RE3024020	$110.79	6/12	2.6699

Fig. 35F 3 – 45° Elbow

Size IN	Part Number	List Price	Packing	Weight LB
1/2	35F 3004	$14.02	150/300	0.2009
3/4	35F 3006	$14.16	80/160	0.3287
1	35F 3010	$16.63	40/80	0.5443
1-1/4	35F 3012	$22.09	25/50	0.7874
1-1/2	35F 3014	$36.83	20/40	1.0303
2	35F 3020	$42.55	10/20	1.6687
2-1/2	35F 3024	$108.29	4/8	2.9223

Fig. 35T 3 – Tee

Size IN	Part Number	List Price	Packing	Weight LB
1/2	35T 3004	$14.28	80/160	0.3032
3/4	35T 3006	$16.68	30/60	0.5161
1	35T 3010	$15.23	25/50	0.7522
1-1/4	35T 3012	$28.24	10/20	1.1891
1-1/2	35T 3014	$35.75	10/20	1.5682
2	35T 3020	$50.49	6/12	2.4411
2-1/2	35T 3024	$127.49	4/8	4.2968

Fig. 35BT3 – Bull Head Tee

Size IN	Part Number	List Price	Packing	Weight LB
3/4 x 1	35BT3006010	$27.32	30/60	0.6283
1 x 1-1/4	35BT3010012	$27.97	20/40	0.9966
1 x 1-1/2	35BT3010014	$49.73	15/30	1.1229
1-1/4 x 1 x 1-1/2	35BT3012010014	$35.96	15/30	1.2729
1-1/4 x 1-1/2	35BT3012014	$49.63	15/30	1.3847
1-1/4 x 2	35BT3012020	$75.06	10/20	1.6500
1-1/2 x 1-1/4 x 2	35BT3014012020	$75.06	10/20	1.8445
1-1/2 x 2	35BT3014020	$73.49	8/16	1.9329
2 x 2-1/2	35BT3020024	$134.02	4/8	3.2545

Fig. 35RT3 – Reducing Tee

Size IN	Part Number	List Price	Packing	Weight LB
3/4 x 1/2	35RT3006004	$23.51	60/120	0.4303
1 x 1/2	35RT3010004	$17.23	30/60	0.6514
1 x 1/2 x 1	35RT3010004010	$18.41	30/60	0.6912
1 x 3/4	35RT3010006	$20.74	25/50	0.7262
1 x 3/4 x 3/4	35RT3010006006	$27.97	35/70	0.6206
1 x 3/4 x 1	35RT3010006010	$21.87	25/50	0.7487
1-1/4 x 1/2	35RT3012004	$26.84	20/40	0.8837
1-1/4 x 1/2 x 1-1/4	35RT3012004012	$41.39	25/50	0.9871
1-1/4 x 3/4	35RT3012006	$30.08	15/30	0.9689
1-1/4 x 3/4 x 1-1/4	35RT3012006012	$38.59	20/40	1.0019
1-1/4 x 1	35RT3012010	$27.54	15/30	1.0703
1-1/4 x 1 x 1/2	35RT3012010004	$27.97	25/50	0.7744
1-1/4 x 1 x 3/4	35RT3012010006	$31.64	20/40	0.8589
1-1/4 x 1 x 1	35RT3012010010	$27.97	20/40	0.9869
1-1/4 x 1 x 1-1/4	35RT3012010012	$27.97	15/30	1.1295
1-1/2 x 1/2	35RT3014004	$35.05	16/32	1.0723
1-1/2 x 1/2 x 1-1/4	35RT3014004012	$61.54	18/36	1.1462
1-1/2 x 1/2 x 1-1/2	35RT3014004014	$54.14	12/24	1.2731
1-1/2 x 3/4	35RT3014006	$38.93	16/32	1.1772
1-1/2 x 3/4 x 1-1/4	35RT3014006012	$61.54	20/40	1.2162
1-1/2 x 3/4 x 1-1/2	35RT3014006014	$54.14	18/36	1.2852
1-1/2 x 1	35RT3014010	$35.05	12/24	1.3270
1-1/2 x 1 x 1/2	35RT3014010004	$56.21	20/40	0.9220
1-1/2 x 1 x 3/4	35RT3014010006	$52.60	16/32	0.9860
1-1/2 x 1 x 1	35RT3014010010	$49.63	16/32	1.1220
1-1/2 x 1 x 1-1/4	35RT3014010012	$62.59	12/24	1.2837
1-1/2 x 1 x 1-1/2	35RT3014010014	$35.96	12/24	1.4247
1-1/2 x 1-1/4	35RT3014012	$50.06	12/24	1.4414
1-1/2 x 1-1/4 x 1/2	35RT3014012004	$38.93	16/32	1.0039
1-1/2 x 1-1/4 x 3/4	35RT3014012006	$38.93	16/32	1.0861
1-1/2 x 1-1/4 x 1	35RT3014012010	$35.75	16/32	1.2210
1-1/2 x 1-1/4 x 1-1/4	35RT3014012012	$49.66	14/28	1.3798
1-1/2 x 1-1/4 x 1-1/2	35RT3014012014	$49.66	14/28	1.5642
2 x 1/2	35RT3020004	$50.76	10/20	1.5580
2 x 3/4	35RT3020006	$50.76	10/20	1.6570
2 x 1	35RT3020010	$50.76	8/16	1.8273
2 x 1 x 2	35RT3020010020	$50.76	8/16	2.0788
2 x 1-1/4	35RT3020012	$55.08	8/16	1.9969
2 x 1-1/4 x 2	35RT3020012020	$55.08	8/16	2.1542
2 x 1-1/2	35RT3020014	$58.27	8/16	2.1450
2 x 1-1/2 x 1/2	35RT3020014004	$57.56	10/20	1.3941
2 x 1-1/2 x 3/4	35RT3020014006	$57.56	10/20	1.4784
2 x 1-1/2 x 1	35RT3020014010	$50.98	8/16	1.6139
2 x 1-1/2 x 1-1/4	35RT3020014012	$77.60	8/16	1.7340
2 x 1-1/2 x 1-1/2	35RT3020014014	$75.06	8/16	1.9415
2 x 1-1/2 x 2	35RT3020014020	$75.06	8/16	2.2684

Permission #3715634090247
RSN: 1229834
Page 14 of 20

Fig. 35CP3 – Straight Coupling with Ribs

Size IN	Part Number	List Price	Packing	Weight LB
1/2	35CP3004	$5.72	200/400	0.1459
3/4	35CP3006	$7.52	100/200	0.2453
1	35CP3010	$9.34	60/120	0.3520
1-1/4	35CP3012	$13.93	35/70	0.5542
1-1/2	35CP3014	$19.33	25/50	0.7674
2	35CP3020	$28.89	15/30	1.1686
2-1/2	35CP3024	$61.38	9/18	2.1487

Fig. 35RC3 – Hex Reducing Coupling

Size IN	Part Number	List Price	Packing	Weight LB
1 x 1/2	35RC3010004	$9.56	80/160	0.3584
1 x 3/4	35RC3010006	$12.74	60/120	0.4494
1-1/4 x 3/4	35RC3012006	$25.53	40/80	0.6633
2 x 1 (not hex)	35RC3020010	$68.86	20/40	1.0723

Fig. 35HB3 – Hex Bushing

Size IN	Part Number	List Price	Packing	Weight LB
1 x 1/2	35HB3010004	$10.26	180/360	0.2075
1 x 3/4	35HB3010006	$10.26	180/360	0.1712
1-1/4 x 1	35HB3012010	$11.61	90/180	0.3001
1-1/2 x 1	35HB3014010	$13.23	75/150	0.4891
1-1/2 x 1-1/4	35HB3014012	$13.23	75/150	0.3027
2 x 1	35HB3020010	$18.52	40/80	0.6149
2 x 1-1/4	35HB3020012	$18.52	40/80	0.7300
2 x 1-1/2	35HB3020014	$19.17	40/80	0.6154

Fig. 35SP3 – Square Head Plug

Size IN	Part Number	List Price	Packing	Weight LB
1/2	35SP3004	$3.26	600/1200	0.0809
3/4	35SP3006	$4.27	360/720	0.1234
1	35SP3010	$5.37	200/400	0.1914
1-1/4	35SP3012	$7.28	100/200	0.3137
1-1/2	35SP3014	$8.86	80/160	0.4151
2	35SP3020	$12.98	45/90	0.6428

Fig. 35U 3 – Union with Brass Seat

Size IN	Part Number	List Price	Packing	Weight LB
1	35U 3010	$50.84	20/40	0.7498
1-1/4	35U 3012	$70.48	15/30	1.1465
1-1/2	35U 3014	$93.04	10/20	1.6031
2	35U 3020	$117.33	6/12	2.1732

Fig. 35X 3 – Cross

Size IN	Part Number	List Price	Packing	Weight LB
1	35X 3010	$45.04	20/40	0.9845
1-1/4	35X 3012	$63.45	12/24	1.4645
1-1/2	35X 3014	$82.13	8/16	1.9309
2	35X 3020	$116.48	6/12	2.9225

Fig. 35RX3 – Reducing Cross

Size IN	Part Number	List Price	Packing	Weight LB
1-1/4 x 1	35RX3012010	$56.43	15/30	1.2586
1-1/2 x 1	35RX3014010	$82.13	12/24	1.4751
2 x 1	35RX3020010	$118.31	8/16	1.8988

Fig. 35C 3 – Cap

Size IN	Part Number	List Price	Packing	Weight LB
1/2	35C 3004	$6.23	300/600	0.1115
3/4	35C 3006	$7.41	200/400	0.1769
1	35C 3010	$11.61	110/220	0.3131
1-1/4	35C 3012	$15.71	70/140	0.4486
1-1/2	35C 3014	$20.95	50/100	0.5427
2	35C 3020	$28.24	25/50	0.8771
2-1/2	35C 3024	$78.39	18/36	1.5453

Fig. 35BC3 – Beam Clamp

Size IN	Part Number	List Price	Packing	Weight LB
3/8	35BC3003	$7.41	100/200	0.2941
1/2	35BC3004	$10.94	80/160	0.5012

Permit: 2017-1340902-CT
RSN: 1229834
Page 15 of 20

Fig. 200 - "Trimline" Adjustable Band Hanger

Size Range — 1/2" thru 8" pipe

Material — Carbon Steel, Mil. Galvanized to G90 specifications

Function — For fire sprinkler and other general piping purposes. Knurled swivel nut design permits hanger adjustment after installation.

Features —

- (1/2" thru 2") Flared edges ease installation for all pipe types and protect CPVC plastic pipe from abrasion. Captured design keeps adjusting nut from separating with hanger. Hanger is easily installed around pipe.
- ($2^1/_2$" thru 8" Spring tension on nut holds it securely in hanger before installation. Adjusting nut is easily removed.

Approvals — Underwriters' Laboratories listed (1/2" thru 8") in the USA **(UL)** and Canada **(cUL)** for steel and CPVC plastic pipe and Factory Mutual Engineering Approved (3/4" thru 8"). Conforms to Federal Specifications WW-H-171E, Type 10 and Manufacturers Standardization Society SP-69, Type 10.

Maximum Temperature — 650°F

Finish — Mil. Galvanized. For Stainless Steel materials, order TOLCO™ Fig. 200WON.

Order By — Figure number and pipe size

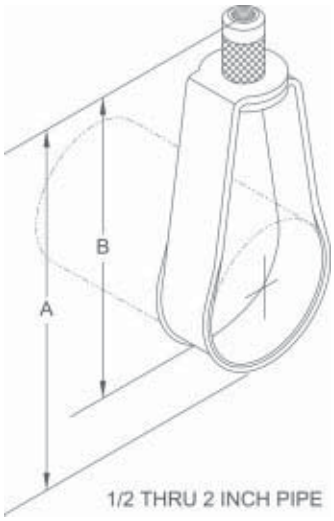

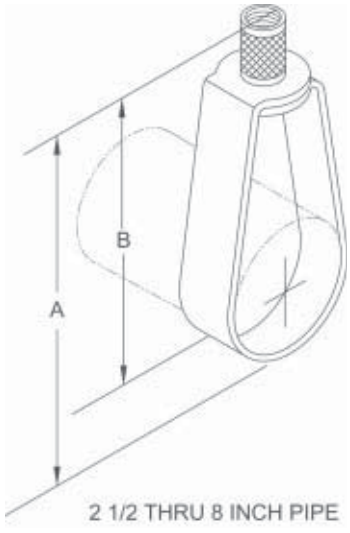

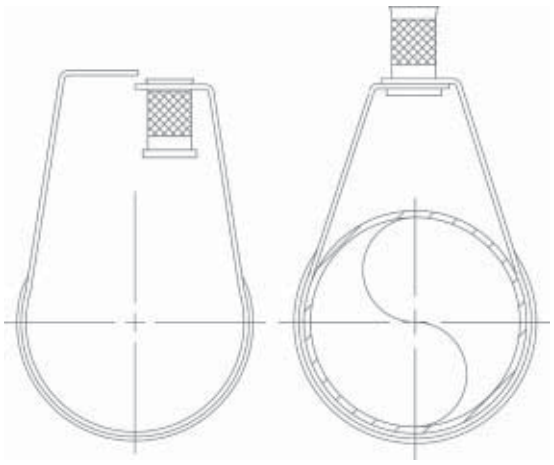

Dimensions • Weights

Pipe Size	Rod Size Inch	Rod Size Metric	A	B	Max. Rec. Load Lbs.	Approx. Length
1/2	3/8	8mm or 10mm	$3^1/_8$	$2^5/_8$	400	11
3/4	3/8	8mm or 10mm	$3^1/_8$	$2^1/_2$	400	11
1	3/8	8mm or 10mm	$3^3/_8$	$2^5/_8$	400	12
$1^1/_4$	3/8	8mm or 10mm	$3^3/_4$	$2^7/_8$	400	13
$1^1/_2$	3/8	8mm or 10mm	$3^7/_8$	$2^7/_8$	400	14
2	3/8	8mm or 10mm	$4^1/_2$	3	400	15
$2^1/_2$	3/8	10mm	$5^5/_8$	$4^1/_8$	600	27
3	3/8	10mm	$5^7/_8$	4	600	29
$3^1/_2$	3/8	10mm	$7^3/_8$	$5^1/_4$	600	34
4	3/8	10mm	$7^3/_8$	5	1000	35
5	1/2	12mm	$9^1/_8$	$6^1/_4$	1250	66
6	1/2	12mm	$10^1/_8$	$6^3/_4$	1250	73
8	1/2	12mm	$13^1/_8$	$8^3/_4$	1250	136

Main Office/Manufacturing Facility • 1375 Sampson Ave. • Corona, CA 92879 • Ph: 909.737.5599 • Fax: 909.737.0330
Customer Service • 800.786.5266
www.tolco.com

Permit: 2017-1340902-CT
RSN: 1229834
Page 16 of 20

4.3.8 HDI & HDI-L Drop-In Anchor

4.3.8.1 Product Description
4.3.8.2 Material Specifications
4.3.8.3 Technical Data
4.3.8.4 Installation Instructions
4.3.8.5 Ordering Information

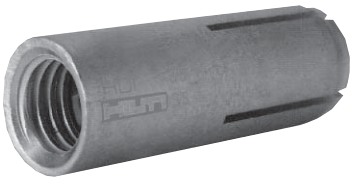

Listings/Approvals

ICC-ES (International Code Council)
ER-2895 (HDI Only)

COLA (City of Los Angeles)
Research Report No. 23709 (HDI Only)

FM (Factory Mutual)
Pipe Hanger Components for Automatic Sprinkler Systems (3/8" - 3/4") (HDI and HDI-L)

UL (Underwriters Laboratories)
UL 203 Pipe Hanger Equipment for Fire Protection Services (3/8" - 3/4")

4.3.8.1 Product Description

The Hilti HDI/HDI-L Drop-In anchor is an internally threaded, flush mounted expansion anchor for use in concrete.

Product Features

HDI

- Anchor, setting tool and Hilti drill bit form a matched tolerance system to provide reliable fastenings
- Below surface setting for easy patchwork
- Allows shallow embedment without sacrificing performance
- Lip provides flush installation, consistent anchor depth, and easy rod alignment (HDI-L)
- Lip allows accurate flush surface setting, independent of hole depth (HDI-L)
- Ideal for repetitive fastenings with threaded rods of equal length
- Intelligent expansion section adapts to the base material and reduces number of hammer blows up to 50% (HDI-L)

Guide Specifications

Expansion Anchor Expansion anchors shall be flush or shell type and zinc plated in accordance with ASTM B 633, SC 1, Type III. Anchors shall be Hilti HDI/HDI-L anchors as supplied by Hilti.

Installation Install shell or flush type anchors in holes drilled with Hilti carbide tipped drill bits. Install anchors as per manufacturer's recommendations.

4.3.8.2 Material Specifications

HDI/HDI-L, 1/4", 3/8", 1/2", and HDI 5/8" and 3/4" are manufactured from mild carbon steel which is plated with a zinc finish for corrosion protection in accordance with ASTM B 633, SC 1, Type III

HDI Stainless Steel material meets the requirements of AISI 303

4.3.8.3 Technical Data

HDI/HDI-L Specification Table

Details		Anchor Size in. (mm)	HDI/HDI-L 1/4 (6.4)	HDI/HDI-L 3/8 (9.5)	HDI/HDI-L 1/2 (12.7)	HDI 5/8 (15.9)	HDI 3/4 (19.1)
d_{bit}	Bit diameter[1]	in.	3/8	1/2	5/8	27/32	1
h_{nom} ℓ h_1	Std. depth of embed. Anchor length Hole depth	in. (mm)	1 (25)	1-9/16 (40)	2 (51)	2-9/16 (65)	3-3/16 (81)
ℓ_{th}	Useable thread length	in. (mm)	7/16 (11)	5/8 (15)	11/16 (17)	7/8 (22)	1-3/8 (34)
	Threads per inch		20	16	13	11	10
h	min. base material thickness	in. (mm)	3 (76)	3-1/8 (79)	4 (102)	5-1/8 (130)	6-3/8 (162)
T_{max}	max. tightening torque	ft-lb (Nm)	4 (5.4)	11 (14.9)	22 (29.8)	37 (50.2)	80 (108.5)

1 For Hilti matched tolerance carbide tipped drill bits, see section 8.4.1.

Combined Shear and Tension Loading

$$\left(\frac{N_d}{N_{rec}}\right)^{5/3} + \left(\frac{V_d}{V_{rec}}\right)^{5/3} \leq 1.0 \quad \text{(Ref. Section 4.1.2.7)}$$

Permit: 2017-1340902-CT
RSN: 1229834
Page 17 of 20

HDI & HDI-L Drop-In Anchor 4.3.8

Carbon Steel HDI Allowable Loads in Concrete

Anchor size in. (mm)	2000 psi (13.8 MPa)				4000 psi (27.6 MPa)				6000 psi (41.4 MPa)			
	Tension lb (kN)		Shear lb (kN)		Tension lb (kN)		Shear lb (kN)		Tension lb (kN)		Shear lb (kN)	
	HDI	HDI-L	HDI	HDI-L	HDI	HDI-L	HDI	HDI-L	HDI	HDI-L	HDI	HDI-L
1/4 (6.4)	500 (2.2)	500 (2.2)	450 (8.0)	450 (8.0)	570 (2.5)	570 (2.5)	625 (2.8)	625 (2.8)	790 (3.5)	790 (3.5)	700 (3.1)	700 (3.1)
3/8 (9.5)	890 (4.0)	890 (4.0)	965 (4.3)	965 (4.3)	1115 (5.0)	1115 (5.0)	1250 (5.6)	1250 (5.6)	1360 (6.0)	1360 (6.0)	1500 (6.7)	1500 (6.7)
1/2 (12.7)	1120 (5.0)	1120 (5.0)	1500 (6.7)	1500 (6.7)	1785 (7.9)	1785 (7.9)	2125 (9.5)	1940 (8.6)	2345 (10.4)	2345 (10.4)	2500 (11.1)	2500 (11.1)
5/8 (15.9)	1875 (8.3)	–	2500 (11.1)	–	2920 (13.0)	–	3250 (14.5)	–	3715 (16.5)	–	3750 (16.7)	–
3/4 (19.1)	2500 (11.1)	–	3875 (17.2)	–	4065 (18.1)	–	5000 (22.2)	–	5565 (24.8)	–	5500 (24.5)	–

Note: The ultimate shear and allowable shear values are based on the use of SAE Grade 5 bolts, (f_y = 85 ksi, F_{ult} = 120 ksi) with the exception of the 1/4" HDI/HDI-L in f'_c = 6000 psi concrete which is based upon the use of a SAE Grade 8 bolt (f_y = 120 ksi, F_{ult} = 150 ksi).

Carbon Steel HDI Ultimate Loads in Concrete

Anchor size in. (mm)	2000 psi (13.8 MPa)				4000 psi (27.6 MPa)				6000 psi (41.4 MPa)			
	Tension lb (kN)		Shear lb (kN)		Tension lb (kN)		Shear lb (kN)		Tension lb (kN)		Shear lb (kN)	
	HDI	HDI-L	HDI	HDI-L	HDI	HDI-L	HDI	HDI-L	HDI	HDI-L	HDI	HDI-L
1/4 (6.4)	1995 (8.9)	1995 (8.9)	1800 (8.0)	1800 (8.0)	2270 (10.1)	2270 (10.1)	2500 (11.1)	2500 (11.1)	3150 (14.0)	3150 (14.0)	2800 (12.5)	2800 (12.5)
3/8 (9.5)	3555 (15.8)	3555 (15.8)	3850 (17.1)	3850 (17.1)	4460 (19.8)	4460 (19.8)	5000 (22.2)	5000 (22.2)	5430 (24.2)	5430 (24.2)	6000 (26.7)	6000 (26.7)
1/2 (12.7)	4470 (19.9)	4470 (19.9)	6000 (26.7)	6000 (26.7)	7140 (31.8)	7140 (31.8)	8500 (37.8)	7750 (34.4)	9375 (41.7)	9375 (41.7)	10000 (44.5)	10000 (44.5)
5/8 (15.9)	7500 (33.4)	–	10000 (44.5)	–	11685 (52.0)	–	13000 (57.8)	–	14865 (66.1)	–	15000 (66.7)	–
3/4 (19.1)	10000 (44.5)	–	15500 (69.0)	–	16260 (72.3)	–	20000 (89.0)	–	22250 (99.0)	–	22000 (97.9)	–

Carbon Steel HDI Allowable Loads in Lightweight Concrete and Lightweight Concrete over Metal Deck[1, 2]

Anchor Size in. (mm)	Anchor Installed in 3000 psi (20.7 MPa) Lt. Wt. Concrete[3]		Anchor Installed Through Steel Deck Upper Flute Into 3000 psi (20.7 MPa) Lt. Wt. Concrete[4]		Anchor Installed Through Steel Deck Lower Flute Into 3000 psi (20.7 MPa) Lt. Wt. Concrete[4]	
	Tension, lb (kN)	Shear, lb (kN)	Tension, lb (kN)	Shear, lb (kN)	Tension, lb (kN)	Shear, lb (kN)
1/4 (6.4)	465 (2.1)	340 (1.5)	530 (2.4)	335 (1.5)	375 (1.7)	250 (1.1)
3/8 (9.5)	755 (3.4)	940 (4.2)	880 (3.9)	1010 (4.5)	500 (2.2)	500 (2.2)
1/2 (12.7)	1135 (5.0)	1700 (7.6)	1105 (4.9)	1755 (7.8)	625 (2.8)	750 (3.3)
5/8 (15.9)	1465 (6.5)	2835 (12.6)	–	–	875 (3.9)	875 (3.9)
3/4 (19.1)	2075 (9.2)	3680 (16.4)	–	–	1250 (5.5)	1000 (4.4)

1 The allowable values are based on the use of SAE Grade 2 bolts installed in the anchors.

2 Based on using a safety factor of 4.0.

3 The tabulated shear and tensile values are for anchors installed in structural lightweight concrete having the designated ultimate compressive strength at the time of installation. The concrete must comply with ASTM C 330-77.

4 The tabulated shear and tensile values are for anchors installed through 20 gauge intermediate decking into structural lightweight concrete having the designated ultimate strength at the time of installation. The concrete must comply with ASTM C 330-77.

Stainless Steel HDI Allowable Loads in Concrete

Anchor size in. (mm)	4000 psi (27.6 MPa)		6000 psi (41.4 MPa)	
	Tension lb (kN)	Shear lb (kN)	Tension lb (kN)	Shear lb (kN)
SS HDI – 1/4 (6.4)	480 (2.1)	600 (2.7)	740 (3.3)	600 (2.7)
SS HDI – 3/8 (9.5)	1040 (4.6)	1230 (5.5)	1460 (6.5)	1230 (5.5)
SS HDI – 1/2 (12.7)	1840 (8.2)	2760 (12.4)	2410 (10.7)	2760 (12.3)
SS HDI – 5/8 (15.9)	2630 (11.7)	4510 (20.1)	3770 (16.8)	4510 (20.1)
SS HDI – 3/4 (19.1)	3830 (17.0)	5580 (24.8)	5030 (22.4)	5580 (24.8)

Note: The ultimate and allowable shear values are based on the use of Type 18-8 bolts.

Stainless Steel HDI Ultimate Loads in Concrete

Anchor size in. (mm)	4000 psi (27.6 MPa)		6000 psi (41.4 MPa)	
	Tension lb (kN)	Shear lb (kN)	Tension lb (kN)	Shear lb (kN)
SS HDI – 1/4 (6.4)	1930 (8.6)	2400 (10.7)	2950 (13.1)	2400 (10.7)
SS HDI – 3/8 (9.5)	4170 (18.5)	4920 (21.9)	5850 (26.0)	4920 (21.9)
SS HDI – 1/2 (12.7)	7350 (32.7)	11040 (49.1)	9630 (42.8)	11040 (49.1)
SS HDI – 5/8 (15.9)	10540 (46.9)	18040 (80.2)	15100 (67.2)	18040 (80.2)
SS HDI – 3/4 (19.1)	15340 (68.2)	22320 (99.3)	20130 (89.5)	22320 (99.3)

Permit: 2017-1340902-CT
RSN: 1229834
Page 18 of 20

4.3.8 HDI & HDI-L Drop-In Anchor

Anchor Spacing and Edge Distance Guidelines (See Anchoring Technology Section 4.1.3)

Anchor Spacing Adjustment Factors

s = Actual Spacing

s_{min} = 2.0 h_{nom}

s_{cr} = 3.5 h_{nom}

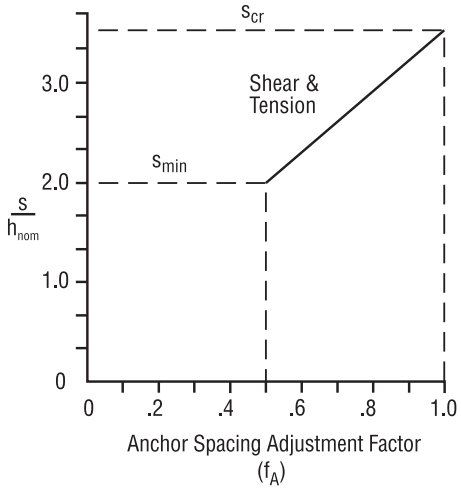

Edge Distance Adjustment Factors

c = Actual edge distance

c_{min} = 2.0 h_{nom}

c_{cr} = 3.0 h_{nom}

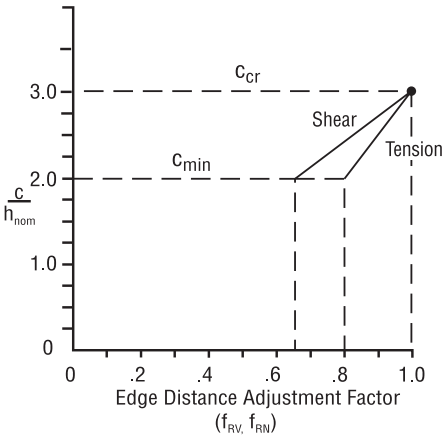

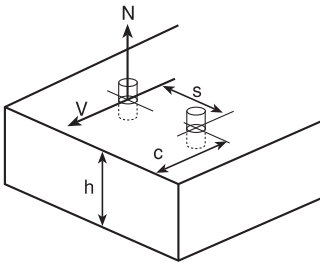

Influence of Anchor Spacing & Edge Distance f_A, f_R

Anchor Size in. (mm)	h_{nom} in. (mm)
1/4 (6.4)	**1** (25)
3/8 (9.5)	**1-9/16** (40)
1/2 (12.7)	**2** (51)
5/8 (15.8)	**2-9/16** (65)
3/4 (19.1)	**3-3/16** (81)

h_{nom} = standard embedment depth

Load Adjustment Factors (Anchor Spacing) f_A

Tension/Shear Loads

Spacing s in. (mm)	Anchor Diameter 1/4	3/8	1/2	5/8	3/4
2 (51)	.50				
2-1/2 (64)	.67				
3 (76)	.83	.50			
3-1/2 (89)	1.0	.58			
4 (102)		.69	.50		
4-1/2 (114)		.79	.58		
5 (127)		.90	.67	.50	
5-1/2 (140)		1.0	.75	.55	
6 (152)			.83	.61	.50
7 (178)			1.0	.74	.57
8 (203)				.87	.67
9 (229)				1.0	.77
10 (254)					.88
11 (279)					.98
12 (305)					1.0

s_{min} = 2.0 h_{nom}, s_{cr} = 3.5 h_{nom}

$f_A = 0.33 \frac{s}{h_{nom}} - 0.17$

for $s_{cr} > s > s_{min}$

Load Adjustment Factors (Edge Distance) f_R

Tension, f_{RN}

Edge Distance c in. (mm)	Anchor Diameter 1/4	3/8	1/2	5/8	3/4
2 (51)	.80				
2-1/2 (64)	.90				
3 (76)	1.0	.80			
3-1/2 (89)		.85			
4 (102)		.91	.80		
4-1/2 (114)		.98	.85		
5 (127)		1.0	.90	.80	
5-1/2 (140)			.95	.83	
6 (152)			1.0	.87	
6-1/2 (165)				.91	.80
7 (178)				.95	.84
8 (203)				1.0	.90
9 (229)					.96
10 (254)					1.0

c_{min} = 2.0 h_{nom}, c_{cr} = 3.0 h_{nom}

$f_{RN} = 0.2 \frac{c}{h_{nom}} + 0.4$

for $c_{cr} > c > c_{min}$

Shear, f_{RV}

Edge Distance c in. (mm)	Anchor Diameter 1/4	3/8	1/2	5/8	3/4
2 (51)	.65				
2-1/2 (64)	.83				
3 (76)	1.0	.65			
3-1/2 (89)		.73			
4 (102)		.85	.65		
4-1/2 (114)		.96	.74		
5 (127)		1.0	.83	.65	
5-1/2 (140)			.91	.70	
6 (152)			1.0	.77	
6-1/2 (165)				.84	.65
7 (178)				.91	.72
8 (203)				1.0	.83
9 (229)					.94
10 (254)					1.0

c_{min} = 2.0 h_{nom}, c_{cr} = 3.0 h_{nom}

$f_{RV} = 0.35 \frac{c}{h_{nom}} - 0.05$

for $c_{cr} > c > c_{min}$

Permit: 2017-1340902-CT
RSN: 1229834
Page 19 of 20

Fig. 98 - Rod Stiffener

Component of State of California OSHPD Approved Seismic Restraints System

Size Range — Secures 3/8" thru 7/8" hanger rod

Material — Carbon Steel

Function — Secures channel to hanger rod for vertical seismic bracing.

Approvals — Underwriters Laboratories Listed in the USA (**UL**) and Canada (**cUL**). Included in our Seismic Restraints Catalog approved by the State of California Office of Statewide Health Planning and Development (**OSHPD**). For additional load, spacing and placement information relating to OSHPD projects, please refer to the TOLCO Seismic Restraint Systems Guidelines

Finish — Electro Galvanized

Note — Available in HDG finish or Stainless Steel materials.

Order By — Figure number

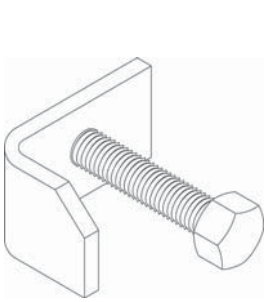

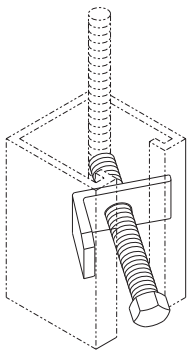

Fig. 99 - All Thread Rod Cut to Length

Size Range — Secures 3/8" thru 7/8" rod in 1" increments

Material — Carbon Steel

Maximum Temperature — 750°F

Finish — Plain

Note — Available in Electro-Galvanized and HDG finish or Stainless Steel materials.

Order By — Figure number, rod diameter, rod length and finish

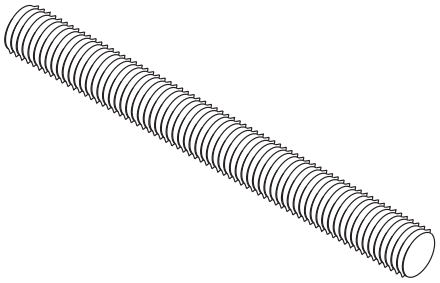

Dimensions • Weights

Rod Size	Max. Rec. Load Lbs. For Service Temps 650°F	750°F
3/8	610	540
1/2	1130	1010
5/8	1810	1610
3/4	2710	2420
7/8	3770	3360

Fig. 100 - All Thread Rod Full Lengths

Size Range — Secures 3/8" thru 7/8" rod in 10' lengths

Material — Carbon Steel

Maximum Temperature — 750°F

Finish — Plain

Note — Available in Electro-Galvanized and HDG finish or Stainless Steel materials.

Order By — Figure number, rod diameter and finish

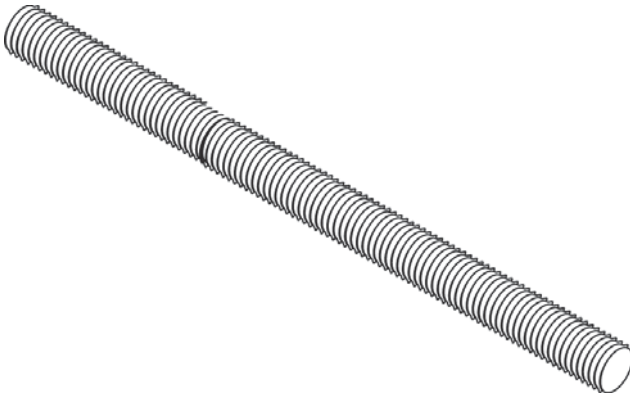

Dimensions • Weights

Rod Size	Max Rec. Load Lbs. For Service Temps 650°F	750°F	Approx. Wt./100
1/4	240	215	12
3/8	610	540	29
1/2	1130	1010	53
5/8	1810	1610	84
3/4	2710	2420	123
7/8	3770	3360	169
1	4960	4420	222
1 1/4	8000	7140	360
1 1/2	11630	10370	510

OFFICE/MANUFACTURING FACILITY • 1375 SAMPSON AVE. • CORONA, CA 92879 • PH: 951.737.5599 • FAX: 951.737.0330
CUSTOMER SERVICE • 800.786.5266
www.tolco.com

Permit: 2017-1340902-CT
RSN: 1229834
Page 20 of 20