RSN: 1491035
Permit # 2020-1873035-CT
Sheet 1 of 18

TMAC - COLORADO NEUROLOGY

THE MEDICAL CENTER OF AURORA
1400 S. POTOMAC ST.,SUITE 201
AURORA, CO 80012

BUILDING ANALYSIS

OCCUPANCY GROUP & USE	B (OFFICE)
NUMBER OF FLOORS	2 FLOORS
CONSTRUCTION TYPE	EXISTING
IS BUILDING SPRINKLERED?	FULLY
SYSTEM NOTIFICATION TYPE	FULLY
SYSTEM MONITORING BY	EXISTING
PROJECT SQUARE FOOTAGE	3,163 SQ. FT.

BUILDING CODE REFERENCES

NFPA VERSION	2013 NFPA 72
I.B.C. VERSION	2015 I.B.C.
I.F.C. VERSION	2015 I.F.C.
NEC VERSION	2020 N.E.C.
ANSI VERSION	
CITY AMENDMENTS	
SYSTEM REQUIRED PER	2020 NFPA 70

AUTHORITY HAVING JURISDICTION

CITY OF AURORA FIRE DIVISION
15151 E. ALAMEDA PARKWAY
AURORA, CO 80012
PHONE: 303-739-7000

WIRE DESIGNATION LIST

- SLC - 18/2 NON-SHIELDED
- STROBES - 14/2 NON-SHIELDED
- SPEAKER - 16/2 NON-SHIELDED

DEVICE LABELING

ALL EQUIPMENT SHALL BE CLEARLY LABELED WITH TYPEWRITTEN TEXT (BRADY LABEL) AT A FONT SIZE OF AT LEAST 18 POINT.

1. SMOKE DETECTORS AND MANUAL PULL STATIONS SHALL BE LABELED WITH THE DEVICE ADDRESS ON THE BASE OF THE DETECTOR AND THE TOP OF MANUAL PULL STATION.
2. ALL NOTIFICATION APPLIANCES SHALL BE LABELED WITH THE NOTIFICATION APPLIANCE CIRCUIT DESIGNATION. THE "END OF LINE SHALL BE CLEARLY LABELED.
3. MONITOR AND RELAY MODULES SHALL BE LABELED WITH DEVICE ADDRESS AND FUNCTION.

INSTALLATION WIRING STYLES

IDC - INITIATING DEVICE CIRCUIT - NON-ADDRESSABLE DEVICES

STYLE B (CLASS B) — MM

DRY CONTACT DEVICES — TS

SLC - SIGNALING LINE CIRCUIT - ADDRESSABLE DEVICES

STYLE 4 (CLASS B) — S P

NAC - NOTIFICATION APPLIANCE CIRCUIT

STYLE Y (CLASS B)

DRAWING INDEX

PAGE #	PAGE CONTENT
FA-01	COVER PAGE/BUILDING ANALYSIS/BUILDING CODES/NOTES
FA-02	FIRE ALARM PLAN/RISER/MATRIX/CALCS.

Integrity Fire —Safety Services—

2695 W. 3RD AVE
DENVER, CO 80219

DRAWN BY:
LES.MASDIN@
INTEGRITYFIRESAFETYSERVICES.COM
303-557-1820 EXT 714

GENERAL CONTRACTOR:

KLM CONSTRUCTION
7000 W. 14TH AVE.
LAKEWOOD, CO 80214
(720) 663-1096

PROPERTY MANAGEMENT:

DEVICE LEGEND

PART NUMBER	QUANTITY	MANUFACTURE	SYMBOL	DEVICE NOTES (COLOR/MOUNTING/SETTINGS/LOCATIONS)	ADDITIONAL DESIGN SYMBOLS	
—	—	—	FACU		GMAP	GRAPHIC MAP
—	—	—	FAA			END OF LINE RESISTOR
—	—	—	NAC #		FS	FLOW SWITCH
—	—	—	DACT		TS	TAMPER SWITCH
—	—	—	P			FIRE/SMOKE DAMPER (BY OTHERS)
—	—	—	H TEMP F/ROR		E	EXISTING DEVICE
—	—	—	S P		RL	RELOCATE DEVICE
—	—	—			RR	REMOVE AND REINSTALL DEVICE
—	—	—	I S P		RRP	REMOVE AND REPLACE DEVICE
—	—	—	RTS			
—	—	—	ISO			
—	—	—	MM			
—	—	—	CR			
—	—	—	CM			
—	—	—				
GCF-VM	1	EST	##cd C W	STROBE, CEILING MOUNT, WHITE		
G1-HDVM/GCF-HDVM	2/1	EST	##cd C/W	HORN-STROBE, WALL/CEILING MOUNT, WHITE		
—	—	—	##cd Xw C/W			
—	—	—	H F C/W			
—	—	—	Xw S C/W			
—	—	—				

DEVICE LABELS

NOTIFICATION — NAC#-#-#
- POWER SUPPLY ID
- CIRCUIT NUMBER
- DEVICE LOCATION ON CIRCUIT

PHONE CIRCUIT — P#-##
- PHONE CIRCUIT #
- PHONE LOCATION ON CIRCUIT

INITIATING - SLC — 001-001
- SIGNALING CARD #
- DEVICE ADDRESS

SPEAKER CIRCUIT — S#-##
- SPEAKER CIRCUIT #
- SPEAKER LOCATION ON CIRCUIT

MOUNTING HEIGHTS

NOT TO SCALE

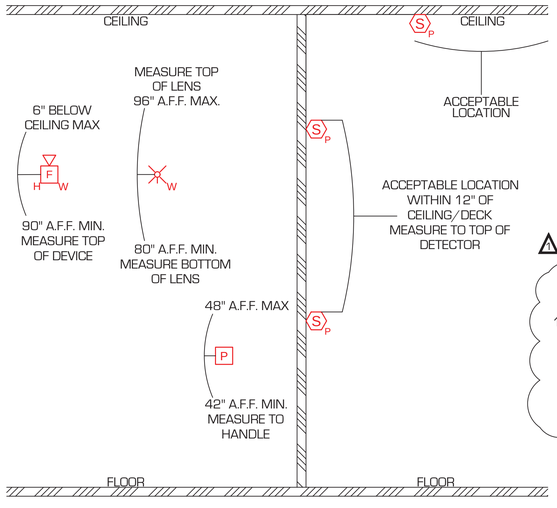

SCOPE OF WORK

1. RELOCATE ONE (1) HORN/STROBE.
2. PROVIDE AND INSTALL ONE (1) CELING MOUNT STROBE.
3. PROVIDE AND INSTALL ONE (1) CEILING MOUNT HORN/STROBE.
4. PROVIDE AND INSTALL TWO (2) WALL MOUNT HORN/STROBES.

1

REVISION NOTES: 09/30/20

1. REVISIONS ON FIRE ALARM DRAWING PLAN (PAGE 1 OF 2) TO SHOW BUILDING CODE REFERENCES SECTION PREVIOUSLY SHOWN THE NEC ADAPTATION WAS THE 2017 NEC CODE SET. IT HAS BEEN CONFIRMED, VERIFIED THAT THE CITY OF AURORA HAS ADOPTED THE 2020 NEC CODE SET. MODIFIED DRAWINGS HAVE BEEN NOW REVISED TO SHOW ADAPTED VERSION IS THE 2020 NEC, PER THE CITY OF AURORA.

REVISIONS

1 9/30/20 - REVISIONS PER AURORA REVIEW

STAMP

PROJECT INFORMATION

TMAC - COLORADO NEUROLOGY

SUITE 201

THE MEDICAL CENTER OF AURORA
1400 S. POTOMAC ST.
AURORA, CO 80012

DATE:	JOB NUMBER:
09/04/2020	19495169

SHEET NUMBER:

1 OF 2

City of Aurora Building Division
Counter Permit intake by: JLG
Date: Oct 02, 2020
RSN: 1491035
Permit: 2020-1873035-CT
2015 INTERNATIONAL CODES & 2020 NEC Scope of permit to be field

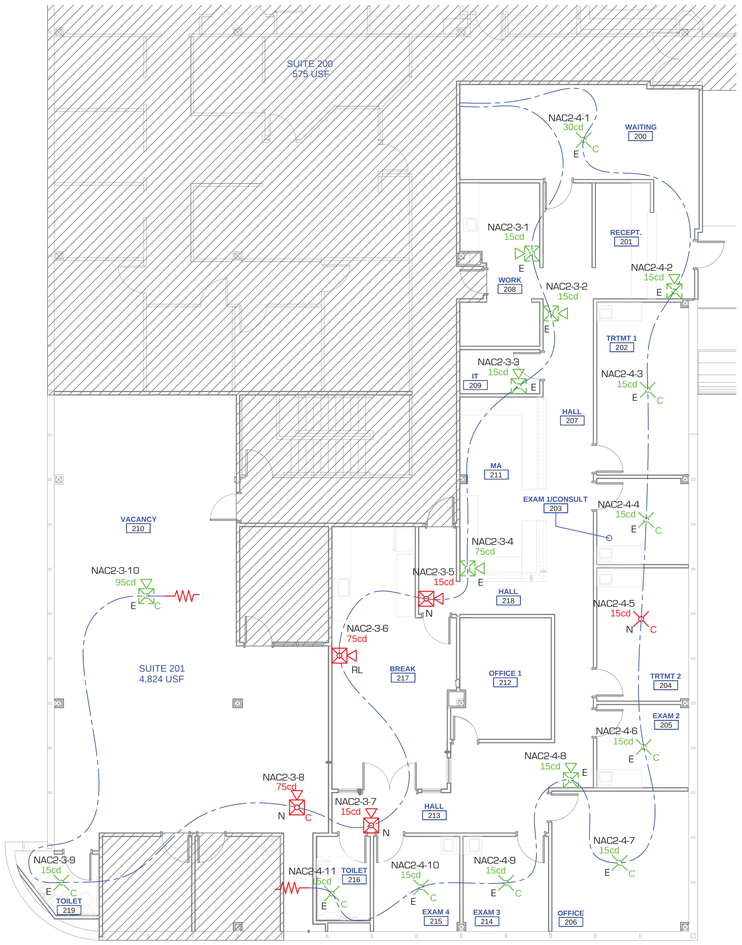

SUITE 201 PLAN

SCALE: 1/8" = 1'-0"

5' 0' 5' 10' 15' 20'

1/8" = 1'-0"

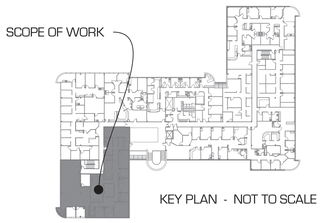

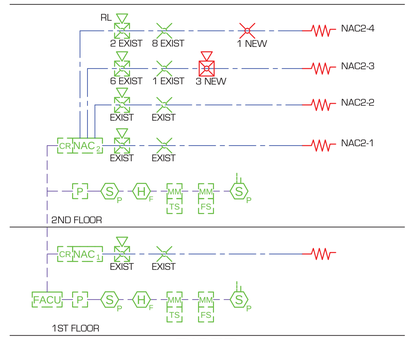

RISER

PANEL ID	NAC2	Enter current in amps .150=150ma			CURRENT DRAW PER DEVICE @ 16VDC						VOLTAGE DROP CALCULATIONS - END OF LINE METHOD/LUMP SUM				
FLOOR #	2ND FLOOR ELECT. ROOM				15cd C	30cd C	15cd W	75cd W	75cd C	95cd C	TOTAL LOAD (AMPS)	OHMS PER/ 1000FT	TOTAL VOLTAGE DROP	TOTAL VOLTAGE DROP %	END OF LINE VOLTAGE
PANEL TYPE	EST PAD-2			WIRE	V/O	V/O	A/V	A/V	A/V	A/V					
CIRCUIT ID	CIRCUIT DISCRIPTION	DISTANCE		GAGE	0.109	0.151	0.129	0.222	0.316	0.372					
NAC2-3	SUITE 201 WEST	267	Ft	14	1	0	5	2	1	1	1.8860	3.07	3.0919	15.16%	17.3081
NAC2-4	SUITE 201 EAST	259	Ft	14	8	1	2	0	0	0	1.2810	3.07	2.0371	9.99%	18.3629
Standard Wire Resistance		TOTAL DEVICES									TOTAL LOAD (AMPS)	NOMINAL SYSTEM VOLTAGE		20.4	VOLTS
12ga = 1.98	75°C = Ohm/1000 FT	9	1	7	2	1	1					MINIMUM DEVICE VOLTAGE		16	VOLTS
14ga = 3.07	WIRE RESISTENCE BASED ON:										3.167	FORMULA USED			
16ga = 4.89	NEC, CHAPETER 9, TABLE 8											VOLTAGE=CURRENT*(FEET/1000)*(OHM*2)			
18ga = 7.77	(UNCOATED SOLID COPPER WIRE)														

PANEL ID: NAC2
PANEL LOCATION: 2ND FLOOR ELECTRICAL ROOM

HOURS OF SUPERVISORY: 24 HOUR
MINUTES OF ALARM: 15 MINUTES

PANEL

ITEM #	MFR. PART #	QTY EXIST	QTY NEW	ITEM DESCRIPTION	STANDBY CURRENT (AMPS)	ALARM CURRENT (AMPS)	TOTAL STANDBY CURRENT (AMPS)	TOTAL ALARM CURRENT (AMPS)
1	PAD-2	1	-	SIEMENS BOOSTER PANEL	0.07500	0.17500	0.07500	0.17500
						PANEL TOTAL:	0.07500	0.17500

DEVICES

1	G1-HDVM	7	2	15cd	HORN/STROBE, WALL MT, WHITE	0.00000	0.12900	0.00000	1.16100
2	G1-HDVM	2	-	30cd	HORN/STROBE, WALL MT, WHITE	0.00000	0.16700	0.00000	0.33400
3	G1-HDVM	4	-	75cd	HORN/STROBE, WALL MT, WHITE	0.00000	0.28100	0.00000	1.12400
4	GCF-VM	2	1	15cd	STROBE, CEILING MT, WHITE	0.00000	0.10900	0.00000	0.32700
5	GCF-VM	1	-	30cd	STROBE, CEILING MT, WHITE	0.00000	0.15100	0.00000	0.15100
6	GCF-HDVM	7	-	15cd	HORN/STROBE, CEILING MT, WHITE	0.00000	0.14700	0.00000	1.02900
7	GCF-HDVM	2	-	30cd	HORN/STROBE, CEILING MT, WHITE	0.00000	0.19000	0.00000	0.38000
8	GCF-HDVM	4	1	75cd	HORN/STROBE, CEILING MT, WHITE	0.00000	0.31600	0.00000	1.58000
9	GCF-HDVM	2	-	95cd	HORN/STROBE, CEILING MT, WHITE	0.00000	0.37200	0.00000	0.74400
						DEVICE TOTAL:	0.00000		6.83000

SUPERVISORY		
PANEL	0.07500	AMPS
DEVICE	0.00000	AMPS
SUB-TOTAL	0.07500	AMPS
HOURS OF SUPERVISION	24	HOURS
SUPERVISORY TOTAL	1.8	AMP/HRS

ALARM		
PANEL	0.17500	AMPS
DEVICE	6.83000	AMPS
SUB-TOTAL	7.00500	AMPS
HOURS OF ALARM	0.25	HOURS
ALARM TOTAL	1.7513	AMP/HRS

TOTAL CALCUATED AMP HOURS		
SUPERVISORY TOTAL	1.80000	AMP/HRS
ALARM TOTAL	1.75125	AMP/HRS
TOTAL AMPS	3.55125	AMP/HRS
SAFTEY FACTOR (20%)	0.71025	AMP/HRS
TOTAL AMPS WITH SAFETY	4.26150	AMP/HRS

REQUIRED BATTERIES - TWO (2) AT 7.00 AMP/HRS

THE MEDICAL CENTER OF AURORA

1400 S. POTOMAC ST.
AURORA, CO 80012

SEQUENCE OF OPERATIONS

SYSTEM INPUTS		SYSTEM OUTPUTS	FACP ANNUNCIATION							NOTIF.		SAFETY/ MONITORING						
		ACTUATE COMMON ALARM SIGNAL INDICATOR	ACTUATE AUDIBLE ALARM SIGNAL	ACTUATE COMMON TROUBLE SIGNAL INDICATOR	ACTUATE AUDIBLE TROUBLE SIGNAL	ACTUATE COMMON SUPERVISORY SIGNAL INDICATOR	ACTUATE AUDIBLE SUPERVISORY SIGNAL	DISPLAY CHANGE OF STATUS ON FACU	ACTIVATE ENTIRE BUILDING EVACUATION SIGNAL HORN/STROBES (TEMPORAL 3)	ACTIVATE EXTERIOR HORN/STROBE AT F.D. RESPONSE POINT	SILENCE AUDIBLE SIGNALS	RELEASE MAGNETICALLY HELD SMOKE DOORS	SHUT DOWN AIR HANDLING UNIT	TRANSMIT ALARM SIGNAL TO MONITORING STATION	TRANSMIT TROUBLE SIGNAL TO MONITORING STATION	TRANSMIT SUPERVISORY SIGNAL TO MONITORING STATION	TRANSMIT WATERFLOW SIGNAL TO MONITORING STATION
		A	B	C	D	E	F	G	H	I	J	K	L	M	N	O	P
MANUAL PULL STATION ANY FLOOR	1	X	X					X	X			X		X			
SMOKE SENSOR ANY FLOOR	2	X	X					X	X			X		X			
HEAT DETECTOR ANY FLOOR	3	X	X					X	X			X		X			
DUCT DETECTOR ANY FLOOR	4					X	X	X					X			X	
SPRINKLER WATER FLOW ANY FLOOR	5	X	X					X	X	X		X					X
SPRINKLER CONTROL VALVE	6					X	X	X								X	
FACU AC POWER FAIL	7			X	X			X							X		
FACP LOW BATTERY	8			X	X			X							X		
OPEN CIRCUIT	9			X	X			X							X		
GROUND FAULT	10			X	X			X							X		
NOTIFICATION APPLIANCE CIRCUIT SHORT	11			X	X			X							X		
ALARM SIGNAL SILENCE	12										X						

Integrity Fire
–Safety Services–

2695 W. 3RD AVE
DENVER, CO 80219

DRAWN BY:
LES.MASDIN@
INTEGRITYFIRESAFETYSERVICES.COM
303-557-1820 EXT 714

REVISIONS
1 9/30/20 - REVISIONS PER AURORA REVIEW

STAMP

PROJECT INFORMATION

TMAC - COLORADO NEUROLOGY

SUITE 201

THE MEDICAL CENTER OF AURORA
1400 S. POTOMAC ST.
AURORA, CO 80012

DATE:	JOB NUMBER:
09/04/2020	19495169

SHEET NUMBER:
2 OF 2

Integrity Fire
–Safety Services–

303.557.1820
999 18th St. Suite 3000
Denver, CO 80202
Integral to your *Safety*. Because it *Matters*.

SCOPE OF WORK FOR:

TMAC – COLORADO NEUROLOGY

@

THE MEDICAL CENTER OF AURORA
1400 POTOMAC ST., SUITE 201
AURORA, CO 80012

1. RELOCATE ONE (1) HORN/STROBE.
2. PROVIDE AND INSTALL ONE (1) CEILING MOUNT STROBE.
3. PROVIDE AND INSTALL ONE (1) CEILING MOUNT HORN/STROBE.
4. PROVIDE AND INSTALL TWO (2) WALL MOUNT HORN/STROBES.

Life Safety & Communications

Field Configurable Ceiling Strobes

Genesis Series



One or more patents pending.

7125-1657: 0219

S5389

Overview

Genesis life safety and mass notification/emergency communications (ECS/MNS) ceiling strobes are small, compact, and attractive visible emergency signaling devices. Protruding no more than 1.6" (41 mm) from the ceiling, Genesis strobes blend with any decor.

Thanks to patented breakthrough technology, Edwards Genesis strobes do not require bulky specular reflectors and lenses. Instead, an exclusive cavity design conditions light to produce a highly controlled distribution pattern. Significant development efforts employing this new technology have given rise to a new benchmark in strobe performance – FullLight technology.

FullLight strobe technology produces a smooth light distribution pattern without the spikes and voids characteristic of specular reflectors. This ensures the entire coverage area receives consistent illumination from the strobe flash. As a result, Genesis strobes with FullLight technology go well beyond the minimum UL-required "cross" pattern, significantly exceeding UL-1971 and ULC-S526 light distribution requirements.

Depending on the model, clear lens Genesis ceiling strobes feature 15 to 95, or 95 to 177 candela output (see ordering information), which is selectable with a conveniently-located switch. The candela output setting remains clearly visible even after final installation, yet it is locked in place to prevent unauthorized movement after installation.

Genesis ECS/MNS appliances offer emergency signaling with clear or amber lenses and with optional ALERT housing labels. They are ideal for applications that require differentiation between life safety and mass notification alerts.

Standard Features

- **Field configurable – no need to remove the device!**
  - 15/30/75/95 cd and 95/115/150/177 cd clear strobe lens models available
  - Switch settings remain visible even after the unit is installed
- **ECS/MNS models available**
  - 13/26/65/82 and 82/100/130/155 (1971 equivalent) amber lens models available
- **Unique low-profile design**
  - 30 per cent slimmer profile than comparable signals
  - Attractive appearance
  - No visible mounting screws
  - Available with white or red housings
- **Easy to install**
  - Fits all standard 4" square electrical boxes with plenty of room behind the signal for extra wire – no extension ring or trim plate needed
  - #18 to #12 AWG terminals – ideal for long runs or existing wiring
- **Unparalleled performance**
  - Exclusive FullLight strobe technology produces the industry's most even light distribution
  - Precision timing electronics meet tough synchronizing standards for strobes
  - Low current draw minimizes system overhead
- **Approved for public and private mode applications**
  - UL 1971-listed as signaling devices for the hearing impaired
  - UL 1638-listed as protective visual signaling appliances
  - UL/ULC listed for ceiling or wall use

Application

Genesis strobes are UL 1971 or 1638 listed for indoor use. Prevailing codes require strobes to be used where ambient noise conditions exceed specified levels, where occupants use hearing protection, and in areas of public accommodation. Consult with your Authority Having Jurisdiction for details.

All Genesis strobes exceed UL synchronization requirements (within 10 milliseconds over a two-hour period) when used with a synchronization source. Synchronization for multiple strobe lights in a single field of view is required.

ECS/MNS Applications

Genesis ECS/MNS appliances bring the same high-performance life safety features and unobtrusive design to mass notification applications. Available as standard units with clear or amber lenses with optional ALERT markings, thy are ideal for applications that require differentiation between life safety and ECS/MNS signals. Units are also available (special order) with red, blue or green lenses.

Installation

All models are intended for indoor applications only. Strobes mount to any flush North-American 4" square electrical box, $2^1/_8$" (54 mm) deep.

Genesis ceiling strobes simply unlatch and twist to open. This gains access to mounting screws and the selectable candela switch. The shallow depth of Genesis devices leaves ample room behind the signal for extra wiring. Once installed with the cover in place, no mounting screws are visible.

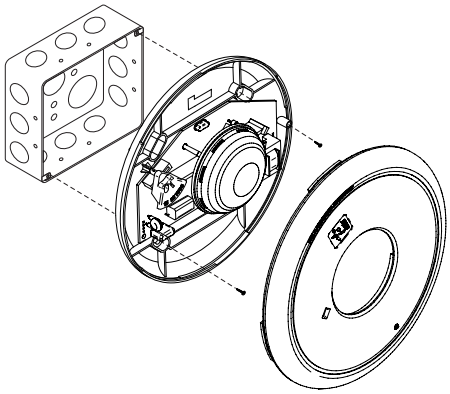

Wiring

Field wiring terminals accommodate #18 to #12 AWG (0.75 mm² to 2.5 mm²) wiring. Strobes are interconnected with a single pair of wires as shown below.

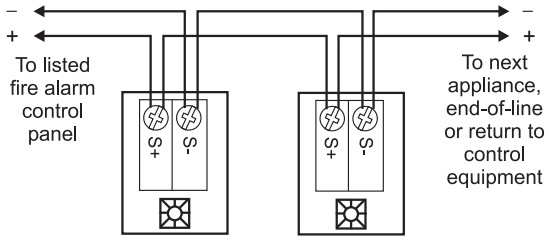

Dimensions

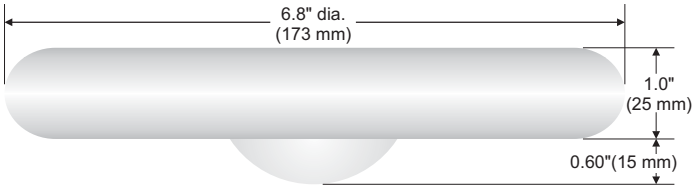

Light output (effective cd)

Percent of UL rating versus angle

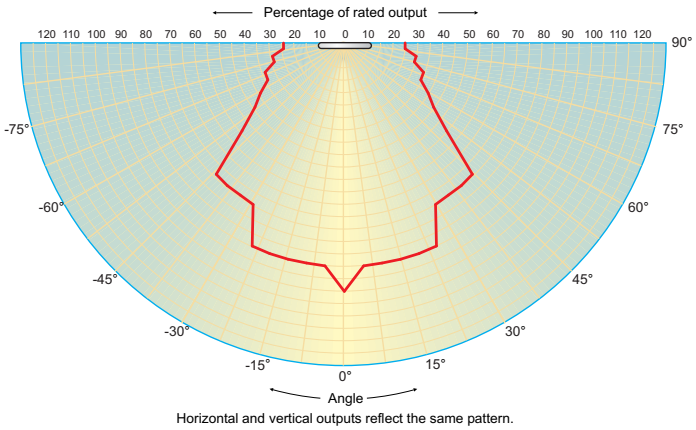

Horizontal and vertical outputs reflect the same pattern.

Field Configuration

Depending on the model, Genesis ceiling speaker-strobes have multi-candela output (see ordering information). The output setting is changed by simply opening the device and sliding the switch to the desired setting. The strobe does not have to be removed to change the output setting. The setting remains visible through a small window on the front of the device after the cover is closed.

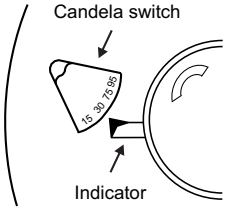

WARNING: These devices will not operate without electrical power. As fires frequently cause power interruptions, we suggest you discuss further safeguards with your local fire protection specialist.

Current Draw

Light output switch settings for UL 1971 listed models are selectable by numeric candela value. ECS/MNS appliances are selectable by A, B, C, or D designations.

UL Rating	Light output setting, standard models				Light output setting, high output models			
	"15" or "D"	"30" or "C"	"75" or "B"	"95" or "A"	"95" or "D"	"115" or "C"	"150" or "B"	"177" or "A"
	RMS	RMS	RMS	RMS	RMS	RMS	RMS	RMS
16 Vdc	109	151	281	318	330	392	502	565
16 Vfwr	131	194	379	437	432	518	643	693

Typical Current	Light output setting, standard models				Light output setting, high output models			
	"15" or "D"	"30" or "C"	"75" or "B"	"95" or "A"	"95" or "D"	"115" or "C"	"150" or "B"	"177" or "A"
	RMS	RMS	RMS	RMS	RMS	RMS	RMS	RMS
16 Vdc	94	140	273	325	333	392	499	551
20 Vdc	74	108	205	244	259	303	378	429
24 Vdc	63	90	168	194	212	245	306	342
33 Vdc	48	70	124	139	155	180	211	236
16 Vfwr	126	187	368	403	484	570	673	724
20 Vfwr	108	156	281	333	380	438	537	604
24 Vfwr	97	139	240	270	318	361	434	484
33 Vfwr	89	119	197	214	245	269	308	338

Current values are shown in mA.

Specifications

Housing	Textured UV stabilized, color impregnated engineered plastic. Exceeds 94V-0 UL flammability rating. Red and white models available.
Lens	Optical grade polycarbonate (clear).
Mounting	Flush mount to North American 4-inch square electrical box, 2-1/8 (54 mm) inches deep. No extension ring required. Suitable for indoor wall or ceiling applications.
Wire Connections	Screw terminals: #18 to #12 AWG (0.75 mm^2 to 2.5 mm^2) wire size.
Operating Voltage	Regulated 16 to 33 Vdc, 16 to 33 Vfwr.
Operating environment	Indoor: 32-120° F (0-49° C) ambient temperature; 0-93% relative humidity.
Agency listings/approvals	Meets or exceeds year 2004 UL requirements for standards UL1638 and UL1971 and Canadian requirements for standards CAN/ULC S526-02 and CAN/ULC S524-01. All models comply with ADA Code of Federal Regulation Chapter 28 Part 36 Final Rule. CSFM, MEA, FM.
Strobe output rating	UL 1971, UL 1638, ULC S526: selectable 15/30/75/95 cd (GC-VM) and 95/115/150/177 cd (GC-VMH)
Strobe operating voltage	GC-VM series strobes: non-coded, filtered 16-33 Vdc or unfiltered 16-33 Vdc FWR.
Strobe flash rate	GC-VM series strobes: one flash per second synchronized with optional G1M Genesis Signal Master indefinitely within 10 milliseconds. Temporal setting (private mode only): synchronized to temporal output of Genesis audible signals on same circuit.
Synchronization	Meets or exceeds UL 1971 requirements. Maximum allowed resistance between any two devices is 20 Ohms. Refer to specifications for the synchronization control module, this strobe, and the control panel to determine allowed wire resistance.
Synchronization Sources	SIGA-CC1S, SIGA-MCC1S, SIGA-CC2A, SIGA-MCC2A, G1M-RM BPS6A, BPS10A, APS6A, APS10A, iO64, iO500, Fireshield Plus 3, 5 and 10 zone. Add G1M for G1-CVM &G1-HDVM devices only.

Contact us...

Email: edwards.fire@fs.utc.com
Web: *www.est-fire.com*

EST is an **EDWARDS** brand.

1016 Corporate Park Drive
Mebane, NC 27302

In Canada, contact Chubb Edwards...
Email: inquiries@chubbedwards.com
Web: *www.chubbedwards.com*

© 2013 UTC Fire & Security Americas Corporation, Inc. All rights reserved. Specifications subject to change without notice. Edwards is part of UTC Climate, Controls & Security, a unit of United Technologies Corporation.

Ordering Information

Light output switch settings for UL 1971 listed models are selectable by numeric candela value.
ECS/MNS appliances are selectable by A, B, C, or D designations.

Model	Housing	Marking	Lens	Strobe	Ship Wt.
Life safety Appliances (c/w running man icon screen printed on housing)					
GC-VM	White	None	Clear	Selectable 15, 30, 75, or 95 cd	1.8 lb. (0.82 kg.)
GCF-VM	White	"FIRE"			
GCFR-VM	Red	"FIRE"			
GC-VMH	White	None		Selectable high output 95, 115, 150, or 177 cd	
GCF-VMH	White	"FIRE"			
ECS/MNS Appliances (no running man icon on housing)					
GCWA-VMA	White	"Alert"	Amber	Selectable A, B, C, D	1.8 lb. (0.82 kg.)
GCWA-VMC			Clear		
GCWN-VMA		None	Amber		
GCWN-VMC			Clear		
GCWA-VMHA		"Alert"	Amber	Selectable high output A, B, C or D	
GCWA-VMHC			Clear		
GCWN-VMHA		None	Amber		
GCWN-VMHC			Clear		

Units with red, blue or green lenses are available as a special order. Contact customer service for details.



RSN: 1491035
Permit # 2020-1873035-CT
Sheet 8 of 18

Overview

Genesis ceiling horn-strobes are small, compact, and attractive audible-visible emergency signaling devices. Protruding no more than 1.6" (41 mm) from the ceiling, Genesis horn-strobes blend with any decor.

Thanks to patented breakthrough technology, GE Security Genesis strobes do not require bulky specular reflectors and lenses. Instead, an exclusive cavity design conditions light to produce a highly controlled distribution pattern. Significant development efforts employing this new technology have given rise to a new benchmark in strobe performance – FullLight technology.

FullLight strobe technology produces a smooth light distribution pattern without the spikes and voids characteristic of specular reflectors. This ensures the entire coverage area receives consistent illumination from the strobe flash. As a result, Genesis strobes with FullLight technology go well beyond the minimum UL-required "cross" pattern.

Depending on the model, Genesis horn-strobes feature 15 to 95, or 95 to 177 candela output (see ordering information), which is selectable with a conveniently-located switch on the front of the device. The candela output setting is clearly visible even after final installation, yet it remains locked in place to prevent unauthorized movement after installation.

Genesis horn-strobes feature textured housings in architecturally neutral white or eye-catching fire alarm red. An ingenious iconographic symbol indicates the purpose of the device. This universal symbol is code-compliant and is easily recognized by all building occupants regardless of what language they speak. Models with "FIRE" markings are also available.

Standard Features

- **Field configurable – no need to remove the device!**
  - 15/30/75/95 cd and 95/115/150/177 cd models available
  - Switch settings remain visible even after the unit is installed
  - Low/high dB settings
- **Unique low-profile design**
  - 30 per cent slimmer profile than comparable signals
  - No visible mounting screws
  - Available with white or red housings
- **Easy to install**
  - Fits all standard 4" square electrical boxes with plenty of room behind the signal for extra wire – no extension ring or trim plate needed
  - Pre-assembled with captive hardware – no loose pieces
  - #18 to #12 AWG terminals – ideal for long runs or existing wiring
- **Unparalleled performance**
  - Exclusive FullLight strobe technology produces the industry's most even light distribution
  - Single high-efficiency microprocessor controls both horn and strobe
  - Low current draw minimizes system overhead
  - Independent horn control provided over a single pair of wires
  - Highly regulated in-rush current allows the maximum number of strobes on a circuit
  - 100 dB peak – multiple frequency tone improves wall penetration

Field Configurable Ceiling Horn-Strobes

Genesis Series

FM Pending

One or more patents pending.



RSN: 1491035
Permit # 2020-1873035-CT
Sheet 9 of 18

Application

Genesis strobes are UL 1971-listed for use indoors as ceiling-mounted public-mode notification appliances for the hearing impaired. Prevailing codes require strobes to be used where ambient noise conditions exceed 105 dBA (87dBA in Canada), where occupants use hearing protection, and in areas of public accommodation as defined in the *Americans with Disabilities Act (see application notes – USA)*.

Combination horn-strobe signals must be installed in accordance with guidelines established for strobe devices.

Strobes

Genesis strobes are UL 1971-listed for use indoors as wall-mounted public-mode notification appliances for the hearing impaired. Prevailing codes require strobes to be used where ambient noise conditions exceed specified levels, where occupants use hearing protection, and in areas of public accommodation. Consult with your Authority Having Jurisdiction for details.

All Genesis strobes exceed UL synchronization requirements (within 10 milliseconds other over a two-hour period) when used with a synchronization source. Synchronization is important in order to avoid epileptic sensitivity.

NOTE: The flash intensity of some visible signals may not be adequate to alert or waken occupants in the protected area. Research indicates that the intensity of strobe needed to awaken 90% of sleeping persons is approximately 100 cd. GE Security recommends that strobes in sleeping rooms be rated at at least 110 cd.

WARNING: These devices will not operate without electrical power. As fires frequently cause power interruptions, further safeguards such as backup power supplies may be required.

Horns

Genesis horn output reaches as high as 99 dB (peak) and features a unique multiple frequency tone that results in excellent wall penetration and an unmistakable warning of danger. All models may be configured for either coded or non-coded signal circuits. They can also be set for low dB output with a jumper cut that reduces horn output by about 5 dB.

The suggested sound pressure level for each signaling zone used with alert or alarm signals is at least 15 dB above the average ambient sound level, or 5 dB above the maximum sound level having a duration of at least 60 seconds, whichever is greater, measured 5 feet (1.5 m) above the floor. The average ambient sound level is, A-weighted sound pressure measured over a 24-hour period.

Doubling the distance from the signal to the ear will theoretically result in a 6 dB reduction of the received sound pressure level. The actual effect depends on the acoustic properties of materials in the space. A 3 dBA difference represents a barely noticeable change in volume.

Dimensions

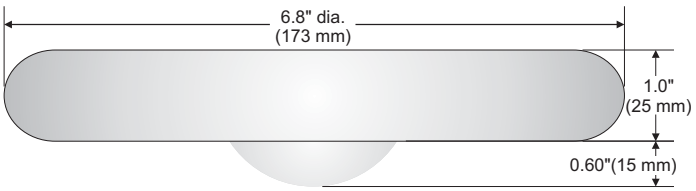

Installation and Mounting

All models are intended for indoor wall or ceiling applications only. Horn-strobes mount to any flush North-American 4" square electrical box.

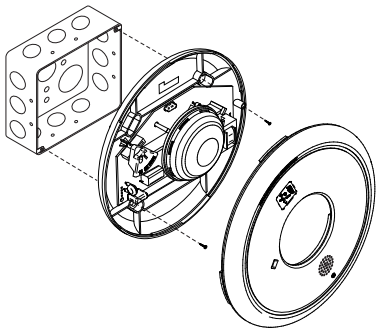

Genesis ceiling horn-strobes simply unlatch and twist to open. This gains access to mounting screws and the selectable candela switch. The shallow depth of Genesis devices leaves ample room behind the signal for extra wiring. Once installed with the cover in place, no mounting screws are visible.

GE Security recommends that these fire alarm horn-strobes always be installed in accordance with the latest recognized edition of national and local fire alarm codes.

Field Configuration

Depending on the model, Genesis horn-strobes may be set for 15 to 95, or 95 to 177 candela output (see ordering information). The output setting is changed by simply opening the device and sliding the switch to the desired setting. The horn-strobe does not have to be removed to change the output setting. The setting remains visible through a small window on the front of the device after the cover is closed.

The horn-strobe comes factory set for high dB output. Low dB output may be selected by cutting a jumper on the circuit board. This reduces the output by about 5 dB.

Wiring

Field wiring terminals accommodate #18 to #12 AWG (0.75 mm² to 2.5 mm²) wiring. Horn/strobes are interconnected with a single pair of wires as shown below.

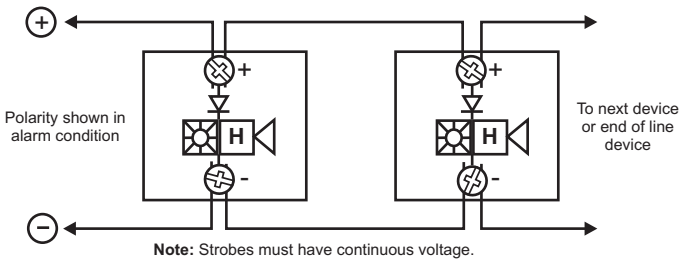

Note: Strobes must have continuous voltage.

Current Draw

GC-HDVM Temporal Horn-strobe: High dB Setting

UL Rating	15 cd RMS	30 cd RMS	75 cd RMS	95 cd RMS
16 Vdc	147	190	316	372
16 Vfwr	189	253	417	451

GC-HDVMH High cd Temporal Horn-strobe: High dB Setting

95 cd RMS	115 cd RMS	150 cd RMS	177 cd RMS
341	399	506	570
487	578	670	711

GC-HDVM Temporal Horn-strobe: High dB Setting

Typical Current	15 cd		30 cd		75 cd		95 cd	
	RMS	Mean	RMS	Mean	RMS	Mean	RMS	Mean
16 Vdc	111	95	152	143	281	276	333	328
20 Vdc	91	80	124	117	219	214	257	251
24 Vdc	80	71	108	101	185	180	212	207
33 Vdc	69	62	89	84	144	140	160	156
16 Vfwr	153	81	218	123	388	240	420	268
20 Vfwr	141	70	190	100	325	188	378	219
24 Vfwr	135	64	176	90	280	154	310	180
33 Vfwr	139	61	167	80	241	122	254	133

GC-HDVMH High cd Temporal Horn-strobe: High dB Setting

95 cd		115 cd		150 cd		177 cd	
RMS	Mean	RMS	Mean	RMS	Mean	RMS	Mean
324	322	377	374	477	474	554	551
258	256	299	296	369	366	417	414
220	217	252	249	304	301	341	338
172	169	188	185	223	220	244	241
463	265	535	312	665	400	718	442
392	211	439	240	517	287	587	334
346	179	382	212	458	246	498	271
296	142	323	152	358	178	387	194

GC-HDVM Temporal Horn-strobe: Low dB Setting

Typical Current	15 cd		30 cd		75 cd		95 cd	
	RMS	Mean	RMS	Mean	RMS	Mean	RMS	Mean
16 Vdc	108	91	149	139	275	269	327	322
20 Vdc	87	75	120	113	214	209	250	245
24 Vdc	76	66	103	97	180	175	205	201
33 Vdc	64	57	85	80	138	135	153	150
16 Vfwr	141	76	204	118	384	239	418	265
20 Vfwr	127	65	176	95	312	181	371	214
24 Vfwr	118	60	162	82	262	149	301	171
33 Vfwr	127	56	155	73	229	118	249	129

GC-HDVMH High cd Temporal Horn-strobe: Low dB Setting

95 cd		115 cd		150 cd		177 cd	
RMS	Mean	RMS	Mean	RMS	Mean	RMS	Mean
317	315	378	376	480	477	544	542
252	250	292	290	364	362	414	411
212	211	245	243	297	295	334	332
159	157	181	179	215	213	234	232
461	265	521	305	656	396	705	432
381	208	437	242	508	285	576	326
335	172	370	195	440	235	485	264
285	134	308	149	349	169	373	186

Notes and Comments

1. Current values are shown in mA.
2. UL Nameplate Rating can vary from Typical Current due to measurement methods and instruments used.
3. GE Security recommends using the Typical Current for system design including NAC and Power Supply loading and voltage drop calculations.
4. Use the Vdc RMS current ratings for filtered power supply and battery AH calculations. Use the Vfwr RMS current ratings for unfiltered power supply calculations.
5. Fuses, circuit breakers and other overcurrent protection devices are typically rated for current in RMS values. Most of these devices operate based upon the heating affect of the current flowing through the device. The RMS current (not the mean current) determines the heating affect and therefore, the trip and hold threshold for those devices.
6. Our industry has used 'mean' currents over the years. However, UL will direct the industry to use the 2004 RMS values in the future.

dBA output

High dB Setting	UL464		Average	Peak
	Temporal	Steady	Temporal/ Steady	Temporal/ Steady
16 Vdc	79.8	83.2	90.6	93.6
24 Vdc	83.3	85.4	93.6	96.6
33 Vdc	85	87.8	95.7	98.7

Low dB Setting	UL464		Average	Peak
	Temporal	Steady	Temporal/ Steady	Temporal/ Steady
16 Vdc	75	79.3	86.3	88.7
24 Vdc	78	83	88.8	92.4
33 Vdc	80.9	85.9	91.8	95.1

Notes
1. All values shown are dBA measured at 10 feet (3.01m); **2.** UL464 values measured in reverberation room; **3.** Average and Peak values are measured in anechoic chamber.

Light output - (effective cd)

Percent of UL rating versus angle

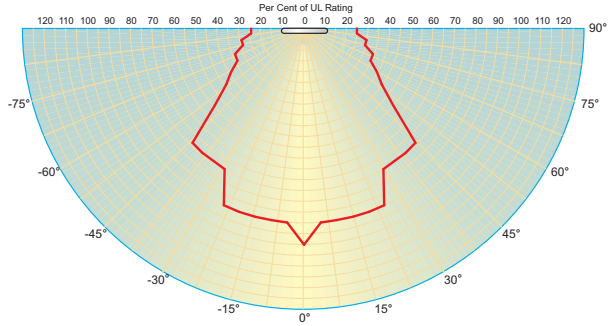

GE
Security

U.S.
T 888-378-2329
F 866-503-3996

Canada
T 519 376 2430
F 519 376 7258

Asia
T 852 2907 8108
F 852 2142 5063

Australia
T 61 3 9259 4700
F 61 3 9259 4799

Europe
T 32 2 725 11 20
F 32 2 721 86 13

Latin America
T 305 593 4301
F 305 593 4300

www.gesecurity.com/est

© 2007 General Electric Company
All Rights Reserved.

Genesis Series is a trademark of GE Security.

Specifications

Housing	Textured UV stabilized, color impregnated engineered plastic. Exceeds 94V-0 UL flammability rating. Red and white models available.
Lens	Optical grade polycarbonate (clear)
Mounting	North-American 4" square box, 2 1/8" (54 mm) deep (indoor wall or ceiling applications only).
Wire connections	Screw terminals: single input for both horn and strobe. #18 to #12 AWG (0.75 mm² to 2.5 mm²) wire size
Operating environment	Indoor: 32-120°F (0-49°C) ambient temperature. 93% relative humidity
Agency listings/approvals	Meets or exceeds ULC-S541, year 2004 UL requirements for standards UL1638 and UL1971, and complies with UL1480. All horn-strobes comply with ADA Code of Federal Regulation Chapter 28 Part 36 Final Rule. CSFM, MEA. FM pending.
Operating voltage	GC-HDVM series temporal-tone horn-strobes: non-coded, filtered 16-33 Vdc or unfiltered 16-33 Vdc FWR (or coded (audible NAC only) when used with optional G1M Genesis Signal Master)
Strobe output rating	UL 1971, UL 1638, ULC S526: selectable 15/30/75/95 cd (GC-HDVM) and 95/115/150/177 cd (GC-HDVMH)
Strobe flash rate	GC-HDVM series temporal-tone horn-strobes: one flash per second synchronized with optional G1M Genesis Signal Master indefinitely within 10 milliseconds (or self-synchronized within 200 milliseconds over thirty minutes on a common circuit without G1M Genesis Signal Master) Temporal setting (private mode only): synchronized to temporal output of horns on same circuit
Synchronization Sources	G1M-RM, SIGA-CC1S, SIGA-MCC1S, BPS6A, BPS10A
Horn pulse rate	GC-HDVM series temporal-tone horn-strobes: temporal rate synchronized with optional G1M Genesis Signal Master indefinitely within 10 milliseconds (or self-synchronized within 200 milliseconds over thirty minutes on a common circuit without G1M Genesis Signal Master)
Temporal audible pattern	½ sec ON, ½ sec OFF, ½ sec ON, ½ sec OFF, ½ sec ON, 1½ sec OFF, then repeat cycle

Ordering Information

Catalog Number	Housing Color	Marking	Description	Ship Wt. lbs (kg)
GC-HDVM	White	None	Genesis Ceiling/Wall Horn-Strobe with selectable 15, 30, 75, or 95 cd output	0.82 (1.8)
GCF-HDVM	White	"FIRE"		
GCFR-HDVM	Red	"FIRE"		
GC-HDVMH	White	None	Genesis Ceiling/Wall Horn-Strobe with selectable 95, 115, 150, or 177 cd output	
GCF-HDVMH	White	"FIRE"		

Accessories		
G1M-RM	Genesis Signal Master – Remote Mount (1-gang)	0.2 (0.1)
SIGA-CC1S	Intelligent Synchronization Output Module (2-gang)	0.5 (0.23)
SIGA-MCC1S	Intelligent Synchronization Output Module (Plug-in UIO)	0.18 (0.08)



White Field Configurable Ceiling Horn-Strobes may be ordered with or without optional 'FIRE' marking. Red Horn-Strobes come with 'FIRE" marking.

imagination at work

RSN: 1491035
Permit # 2020-1873035-CT
Sheet 12 of 18

Overview

The Genesis line of signals are among the smallest, most compact audible-visible emergency signaling devices in the world. About the size of a deck of playing cards, these devices are designed to blend with any decor.

Thanks to patented breakthrough technology, GE Security Genesis strobes do not require bulky specular reflectors and lenses. Instead, an exclusive cavity design conditions light to produce a highly controlled distribution pattern. Significant development efforts employing this new technology have given rise to a new benchmark in strobe performance – FullLight technology.

FullLight strobe technology produces a smooth light distribution pattern without the spikes and voids characteristic of specular reflectors. This ensures the entire coverage area receives consistent illumination from the strobe flash. As a result, Genesis strobes with FullLight technology go well beyond the minimum UL-required "T" pattern, significantly exceeding UL-1971 and ULC-S526 light distribution requirements.

Genesis strobes and horn-strobes offer 15 to 110 candela output, which is selectable with a conveniently-located switch on the side of the device. Models are also available that offer fixed 15/75 cd output. The candela output setting remains clearly visible even after final installation, yet it stays locked in place to prevent unauthorized tampering.

Genesis signals feature textured housings in architecturally neutral white or traditional fire red. An ingenious iconographic symbol indicates the purpose of the device. This universal symbol is code-compliant and is easily recognized by all building occupants regardless of what language they speak. Models with "FIRE" markings are also available.

Standard Features

- **Unique low-profile design**
  - The most compact UL-1971/ULC-S526 listed strobe available
  - Ultra-slim – protrudes less than one inch
  - Attractive appearance
  - No visible mounting screws
- **Four field-configurable options in one device**
  - Select 15, 30, 75, or 110 cd strobe output
  - Select high (default) or low dB horn output
  - Select temporal (default) or steady horn output
  - Select public mode flash rate (default) or private mode temporal flash
- **Fixed 15/75 cd model available**
- **Easy to install**
  - Fits standard 1-gang electrical boxes – no trim plate needed
  - Optional trim plate accommodates oversized openings
  - Pre-assembled with captive hardware
  - #12 AWG terminals – ideal for long runs or existing wiring
- **Unparalleled performance**
  - Industry's most even light distribution
  - Meets tough synchronizing standards for strobes
  - Single microprocessor controls both horn and strobe
  - Low current draw minimizes system overhead
  - Independent horn control over a single pair of wires
  - Highly regulated in-rush current
  - Multiple frequency tone improves sound penetration
  - Industry's first temporal strobe output

Field Configurable Horns and Strobes

Genesis Series



Application

Genesis strobes are UL 1971-listed for use indoors as wall-mounted public-mode notification appliances for the hearing impaired. Prevailing codes require strobes to be used where ambient noise conditions exceed 105 dBA (87dBA in Canada), where occupants use hearing protection, and in areas of public accommodation as defined in the *Americans with Disabilities Act (see application notes – USA)*.

Combination horn-strobe signals must be installed in accordance with guidelines established for strobe devices.

Strobes

Genesis strobes are UL 1971-listed for use indoors as wall-mounted public-mode notification appliances for the hearing impaired. Prevailing codes require strobes to be used where ambient noise conditions exceed specified levels, where occupants use hearing protection, and in areas of public accommodation. Consult with your Authority Having Jurisdiction for details.

All Genesis strobes exceed UL synchronization requirements (within 10 milliseconds other over a two-hour period) when used with a synchronization source. Synchronization is important in order to avoid epileptic sensitivity.

NOTE: The flash intensity of some visible signals may not be adequate to alert or waken occupants in the protected area. Research indicates that the intensity of strobe needed to awaken 90% of sleeping persons is approximately 100 cd. GE Security recommends that strobes in sleeping rooms be rated at at least 110 cd.

WARNING: These devices will not operate without electrical power. As fires frequently cause power interruptions, further safeguards such as backup power supplies may be required.

Horns

Genesis horn output reaches as high as 99 dB and features a unique multiple frequency tone that results in excellent sound penetration and an unmistakable warning of danger. Horns may be configured for either coded or non-coded signal circuits. They can also be set for low dB output with a jumper cut that reduces horn output by about 5 dB. Horn-only models may be ceiling-mounted or wall-mounted.

The suggested sound pressure level for each signaling zone used with alert or alarm signals is at least 15 dB above the average ambient sound level, or 5 dB above the maximum sound level having a duration of at least 60 seconds, whichever is greater, measured 5 feet (1.5 m) above the floor. The average ambient sound level is, A-weighted sound pressure measured over a 24-hour period.

Doubling the distance from the signal to the ear will theoretically result in a 6 dB reduction of the received sound pressure level. The actual effect depends on the acoustic properties of materials in the space. A 3 dBA difference represents a barely noticeable change in volume.

Installation

Genesis horns and strobes mount to any standard one-gang surface or flush electrical box. Matching optional trim plates are used to cover oversized openings and can accommodate one-gang, two-gang, four-inch square, or octagonal boxes, and European 100 mm square.



Genesis Horn/Strobe with optional trim plate

All Genesis signals come pre-assembled with captive mounting screws for easy installation. Two tabs at the top of the signal unlock the cover to reveal the mounting hardware. The shallow depth of Genesis devices leaves ample room behind the signal for extra wiring. Once installed with the cover in place, no mounting screws are visible.

Field Configuration

Temporal horn and horn-strobe models are factory set to sound in a **three-pulse temporal pattern**. Units may be configured for use with coded systems by cutting a jumper on the circuit board. This results in a **steady output** that can be turned on and off (coded) as the system applies and removes power to the signal circuit. A Genesis Signal Master is required when horn-strobe models are configured for coded systems. Non-temporal, horn-only models sound a steady tone.

Genesis strobes and horn-strobes are shipped from the factory ready for use as **UL 1971 compliant** signals for public mode operation. These signals may be configured for **temporal flash** by cutting a jumper on the circuit board. This battery-saving feature is intended for private mode signaling only.

Genesis strobes and horn-strobes may be set for **15, 30, 75, or 110 candela output**. The output setting is changed by simply opening the device and sliding the switch to the desired setting. The device does not have to be removed to change the output setting. The setting remains visible through a small window on the side of the device after the cover is closed.

Horns and horn-strobes are factory set for **high dB output**. **Low dB output** may be selected by cutting a jumper on the circuit board. This reduces the output by about 5 dB.

Wiring

Field wiring terminals accommodate #18 to #12 AWG (0.75 mm² to 2.5 mm²) wiring. Horns, strobes, and combination horn-strobes are interconnected with a single pair of wires as shown below.

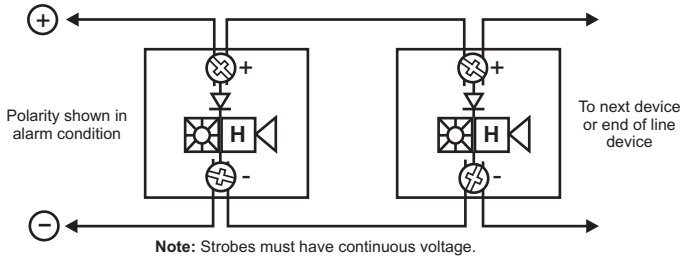

Current Draw

Strobes, Horn-Strobes

Multi-cd Wall Strobes (G1-VM)

UL Rating	15 cd*	30 cd*	15/75 cd**	75 cd*	110 cd*
	RMS	RMS	RMS	RMS	RMS
16 Vdc	103	141	152	255	311
16 Vfwr	125	179	224	346	392

*G1-VM multi-cd; **G1F-V1575 fixed 15/75 cd

Typical Current	15 cd		30 cd		15/75		75 cd		110 cd	
	RMS	Mean	RMS	Mean	RMS	Mean	RMS	Mean	RMS	Mean
16 Vdc	85	79	127	124	150	140	245	243	285	283
20 Vdc	71	66	98	96	123	114	188	186	240	238
24 Vdc	59	55	82	80	104	97	152	150	191	190
33 Vdc	46	44	64	63	84	77	112	111	137	136
16 Vfwr	119	64	169	97	223	126	332	203	376	240
20 Vfwr	103	51	143	76	189	100	253	150	331	198
24 Vfwr	94	44	129	65	169	85	218	121	262	152
33 Vfwr	87	37	112	52	148	68	179	89	205	106

Wall Temporal Horn-strobes – High dB Setting

UL Rating	15 cd*	30 cd*	15/75 cd**	75 cd*	110 cd*
	RMS	RMS	RMS	RMS	RMS
16 Vdc	129	167	172	281	337
16 Vfwr	176	230	269	397	443

*G1-HDVM multi-cd
**G1F-HDV1575 fixed 15/75 cd

Typical Current	15 cd		30 cd		15/75		75 cd		110 cd	
	RMS	Mean	RMS	Mean	RMS	Mean	RMS	Mean	RMS	Mean
16 Vdc	102	89	135	129	160	152	246	242	309	305
20 Vdc	88	77	109	104	137	129	193	190	248	243
24 Vdc	81	71	94	90	122	114	161	158	203	200
33 Vdc	74	64	72	74	106	98	124	121	154	151
16 Vfwr	144	77	182	106	247	143	352	212	393	249
20 Vfwr	141	68	162	87	220	120	274	158	362	210
24 Vfwr	136	65	152	76	203	106	235	133	282	165
33 Vfwr	125	54	144	65	196	94	201	101	232	123

Wall Temporal Horn-strobes – Low dB Setting

UL Rating	15 cd*	30 cd*	15/75 cd**	75 cd*	110 cd*
	RMS	RMS	RMS	RMS	RMS
16 Vdc	122	160	146	274	330
16 Vfwr	162	216	231	383	429

*G1-HDVM multi-cd
**G1F-HDV1575 fixed 15/75 cd

Typical Current	15 cd		30 cd		15/75		75 cd		110 cd	
	RMS	Mean	RMS	Mean	RMS	Mean	RMS	Mean	RMS	Mean
16 Vdc	96	84	130	124	158	149	243	240	302	297
20 Vdc	79	70	104	99	133	124	189	186	241	237
24 Vdc	68	61	88	84	119	110	156	154	197	193
33 Vdc	56	52	71	68	100	93	118	116	146	143
16 Vfwr	128	69	180	104	241	139	344	204	389	244
20 Vfwr	118	60	157	84	213	115	266	156	343	200
24 Vfwr	113	54	144	74	195	101	230	128	279	161
33 Vfwr	112	48	137	64	182	87	197	99	226	117

Horns

Wall or Ceiling Mounted Temporal Horns (G1-HD)

UL Rating	High dB (RMS)	Low dB (RMS)
16 Vdc	26	19
24 Vdc	36	27
33 Vdc	41	33
16 Vfwr	51	37
24 Vfwr	69	52
33 Vfwr	76	70

Typical Current	High dB		Low dB	
	RMS	Mean	RMS	Mean
16 Vdc	22	17	17	14
20 Vdc	24	19	19	16
24 Vdc	27	21	22	18
33 Vdc	32	25	26	22
16 Vfwr	34	15	30	14
20 Vfwr	40	19	34	16
24 Vfwr	45	21	38	18
33 Vfwr	52	24	47	22

Wall or Ceiling Mounted Horns (G1-P)

UL Designation	Voltage Range	Max. Current, RMS
Regulated 24 Vdc	16 - 33 Vdc	13 mA
24 fwr	16 - 33 Vfwr	11 mA

Typical Current	RMS	Mean
24 Vdc	10	10
24 Vdc	11	11
31 Vdc	12	12
20 Vfwr	9	8
24 Vfwr	10	9

Notes and Comments

1. Current values are shown in mA.
2. UL Nameplate Rating can vary from Typical Current due to measurement methods and instruments used.
3. GE Security recommends using the Typical Current for system design including NAC and Power Supply loading and voltage drop calculations.
4. Use the Vdc RMS current ratings for filtered power supply and battery AH calculations. Use the Vfwr RMS current ratings for unfiltered power supply calculations.
5. Fuses, circuit breakers and other overcurrent protection devices are typically rated for current in RMS values. Most of these devices operate based upon the heating affect of the current flowing through the device. The RMS current (not the mean current) determines the heating affect and therefore, the trip and hold threshold for those devices.
6. Our industry has used 'mean' currents over the years. However, UL will direct the industry to use the 2004 RMS values in the future.

RSN: 1491035
Permit # 2020-1873035-CT
Sheet 15 of 18

dBA output

Temporal Horns, Horn-strobes (G1-HD, G1-HDVM series)

High dB Setting	UL464		Average	Peak
	Temporal	Steady	Temporal/ Steady	Temporal/ Steady
16 Vdc	81.4	85.5	91.4	94.2
24 Vdc	84.4	88.6	94.5	97.6
33 Vdc	86.3	90.4	96.9	99.5

Low dB Setting	UL464		Average	Peak
	Temporal	Steady	Temporal/ Steady	Temporal/ Steady
16 Vdc	76.0	80.1	86.3	89.2
24 Vdc	79.4	83.5	89.8	92.5
33 Vdc	82.1	86.5	92.5	95.3

Steady Tone Horns (G1-P series)

	UL464	Average	Peak
16 Vdc	77 dBA, min	85 dBA	91 dBA
16 Vfwr	77 dBA, min	85 dBA	91 dBA

Notes

1. All values shown are dBA measured at 10 feet (3.01m).
2. UL464 values measured in reverberation room.
3. Average and Peak values are measured in anechoic chamber.

Average Sound Output (dBA)

(High dB setting, anechoic, 24V, measured at 10ft)

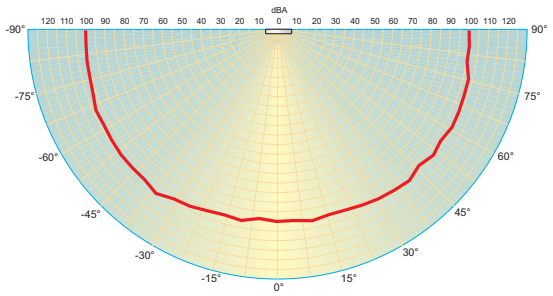

Light output - (effective cd)

Percent of UL rating versus angle

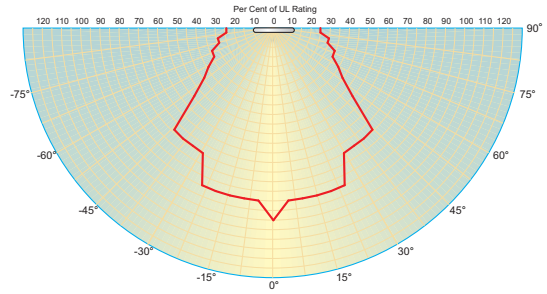

Specifications

Housing	Red or white textured UV stabilized, color impregnated engineered plastic. Exceeds 94V-0 UL flammability rating.
Lens	Optical grade polycarbonate (clear)
Mounting (indoor only)	Strobes and horn-strobes are for wall-mount installation only. Horn-only models may be ceiling- or wall-mounted. Flush mount: 2½ inch (64 mm) deep one-gang box Surface mount: Model 27193 surface mount box, wiremold box, or equivalent surface-mount box With optional trim plate: One-gang, two-gang, four-inch square, octagonal, or European single-gang box
Wire connections	Screw terminals: single input for both horn and strobe. #18 to #12 AWG (0.75 mm² to 2.5 mm²) wire size
Operating environment	Indoor only: 32-120°F (0-49°C) ambient temperature. 93% relative humidity
Agency listings/approvals	UL 1971, UL 1638, UL 464, ULC S525, ULC S526, CSFM, CE, FCC, MEA (FM pending). (All models comply with ADA Code of Federal Regulation Chapter 28 Part 36 Final Rule.)
Dimensions (HxWxD)	Signal: 4-1/2" x 2-3/4" x 13/16" (113 mm x 68 mm x 21 mm) Trimplate: 5" (127 mm); Height – 5-7/8" (149 mm); Depth – ½" (13 mm)
Operating voltage	G1-HD series temporal-tone horns: non-coded, filtered 16-33 Vdc or unfiltered 16-33 Vdc FWR (or coded when horn set to steady tone) G1-HDVM series temporal-tone horn-strobes: non-coded, filtered 16-33 Vdc or unfiltered 16-33 Vdc FWR (or coded (audible NAC only) when used with optional G1M Genesis Signal Master) G1-VM series strobes: non-coded, filtered 16 - 33 Vdc or unfiltered 16-33 Vdc FWR G1-P series steady-tone horns: coded or non-coded, filtered 20-31 Vdc or unfiltered 20-27 Vfwr
Strobe output rating	UL 1971, UL 1638, ULC S526: selectable 15 cd, 30 cd, 75 cd, or 110 cd output UL 1971: 15 cd (fixed 15/75 cd models) UL 1638, ULCS526: 75 cd (fixed 15/75 cd models)
Strobe flash rate	G1-VM strobes and G1-HDVM series temporal-tone horn-strobes: one flash per second synchronized with optional G1M Genesis Signal Master indefinitely within 10 milliseconds (or self-synchronized within 200 milliseconds over thirty minutes on a common circuit without G1M Genesis Signal Master) Temporal setting (private mode only): synchronized to temporal output of horns on same circuit
Synchronization Sources	G1M, G1M-RM, SIGA-CC1S, SIGA-MCC1S, BPS6A, BPS10A
Horn pulse rate	G1-HD temporal-tone horns and G1-HDVM series temporal-tone horn-strobes: temporal rate synchronized with optional G1M Genesis Signal Master indefinitely within 10 milliseconds (or self-synchronized within 200 milliseconds over thirty minutes on a common circuit without G1M Genesis Signal Master) G1-P steady-tone horns: continuous, steady tone only
Temporal audible pattern	½ sec ON, ½ sec OFF, ½ sec ON, ½ sec OFF, ½ sec ON, 1½ sec OFF, then repeat cycle

Ordering Information

Catalog Number		Description	Ship Wt. lbs (kg)
White Finish	Red Finish		
G1-HDVM	G1R-HDVM	Genesis Horn-Strobe (selectable 15, 30, 75, or 110 cd output, selectable high/low dB output)	0.25 (0.11)
G1-VM	G1R-VM	Genesis Strobe (selectable 15, 30, 75, or 110 cd output)	
G1-HD	G1R-HD	Genesis Temporal Horn (selectable high/low dB output)	
G1-P	G1R-P	Genesis Steady Horn (not compatible with Genesis Signal Master)	
G1F-HDVM	G1RF-HDVM	Genesis Horn-Strobe (selectable 15, 30, 75, or 110 cd output, selectable high/low dB output) – with "FIRE" marking	
G1F-VM	G1RF-VM	Genesis Strobe (selectable 15, 30, 75, or 110 cd output) – with "FIRE" marking	
G1F-HD	G1RF-HD	Genesis Temporal Horn (selectable high/low dB output) – with "FIRE" marking	
G1F-P	G1RF-P	Genesis Steady Horn with "FIRE" marking (not compatible with Genesis Signal Master)	
G1F-HDV1575	G1RF-HDV1575	15/75 cd temporal horn-strobe, hi/lo dB-24V – with "FIRE" marking (see note 1)	
G1F-V1575	G1RF-V1575	15/75 cd strobe – with "FIRE" marking (see note 1)	
Mounting Accessories			
G1T	G1RT	Genesis Trim Plate (for two-gang or 4" square boxes)	0.15 (0.7)
G1T-FIRE	G1RT-FIRE	Genesis Trim Plate (for two-gang or 4" square boxes) with "FIRE" markings	0.15 (0.7)
27193-16	27193-11	One-gang surface mount box	1 (0.4)
Synchronization Modules			
G1M		Genesis Signal Master – Snap-on Mount	0.2 (0.1)
G1M-RM		Genesis Signal Master – Remote Mount (1-gang)	
SIGA-CC1S		Intelligent Synchronization Output Module (2-gang)	0.5 (0.23)
SIGA-MCC1S		Intelligent Synchronization Output Module (Plug-in UIO)	0.18 (0.08)

Note 1: These 15/75 cd models provide fixed output and are not multi-candela devices. The 15 cd output component complies with UL1971, while the 75 cd output component complies with UL 1638.





Genesis Horn-Strobes may be ordered in red or white, with or without 'FIRE' marking. Order matching trim plates separately.

GE
Security

U.S.
T 888-378-2329
F 866-503-3996

Canada
T 519 376 2430
F 519 376 7258

Asia
T 852 2907 8108
F 852 2142 5063

Australia
T 61 3 9259 4700
F 61 3 9259 4799

Europe
T 32 2 725 11 20
F 32 2 721 86 13

Latin America
T 305 593 4301
F 305 593 4300

www.gesecurity.com/est

© 2007 General Electric Company
All Rights Reserved.

Genesis Series is a trademark of GE Security.

imagination at work

PART NUMBER 767963

UL Listed and Rated Type FPLP Multi-Conductor Non-Shielded Plenum Fire Alarm



SMARTWIRE GLIDE TECHNOLOGY

CABLE SPECIFICATIONS

DESCRIPTION	14 AWG 2 Conductor Bare Copper, Twisted, Non-Shielded Plenum Fire Alarm, FPLP (UL)
CONDUCTOR	14 (Solid Bare Copper)
INSULATION	Low-Smoke PVC .010"
COLOR CODE	Black/Red
LAY LENGTH	3.75" LHL (3.2 TPF)
SHIELD	N/A
DRAIN WIRE	N/A
JACKET	Low-Smoke PVC .018"
JACKET COLOR	Red Jacket with Yellow Stripe
MARKING	FIRE/LIFE SAFETY CONTROL CABLE INIT. / IND. DEVICE / ZONE A B C D E 0 1 2 3 4 5 6 7 8 9 14 AWG FPLP (UL) ROHS MADE IN THE USA
OVERALL DIAMETER	.206" Nom
CABLE WEIGHT	36 Lbs/Mft.
CAPACITANCE	26 pF/Ft. Nom.
IMPEDANCE	72 Ohms
DC RESISTANCE	2.57 Ohms/Mft @ 20 deg. C
TEMPERATURE RATING	0 C to 75 C / 300 Volt

INDUSTRY STANDARDS

FLAME RATING	Approved For Plenum Use Without Conduit Per NFPA 262 Flame Test
AGENCY APPROVALS	NEC Article 800; FPLP (UL), RoHS Compliant, Made in the USA

All specifications referenced are nominal measurements unless otherwise noted.

 | © Copyright 2014 Windy City Wire, Inc. | All rights reserved.