

Typical Concealed style sprinkler

1 NEW REFLECTED CEILING PLAN

1/4" = 1'-0"



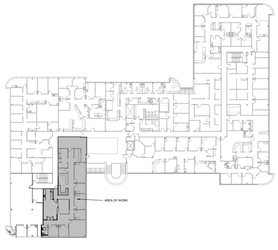

SCALE 1/4"=1'-0"

Scope of Work
1. Add and relocate sprinklers for new ceilings and walls in light hazard tenant space.
2. Fire sprinkler system modifications, hangers, and supports shall be installed per NFPA 13 2013 design requirements and local AHJ.
3. General contractor to coordinate with alarm contractor for system shut down to perform sprinkler modifications.
4. It is the responsibility of the owner to protect the system from freezing and maintain a minimum 40 degree temperature throughout tenant space.
5. Installer shall be responsible to confirm if sprinklers shall be installed centered in the ceiling tile TYPICAL.
6. Relocation of existing lines and mains, paint, patch, wiring, demolition work, sprinklers centered in tiles, custom sprinklers, alarm modifications, and backflow devices are excluded from scope of work.
7. Armovers 1" NPT unless specified

	SYM	CNT	POSITION	FINISH	TEMP	K	NPT	Response	MFG.	MODEL#
Add	A	2	Pendent	Chrome	165	5.6	1/2"	Standard	Reliable	F1
Relocate		4	Pendent	Chrome	165	5.6	1/2"	Standard	Reliable	F1

The hydraulic design area is not being affected by the system modifications.

REVISIONS

DATE	DESCRIPTION	BY

COLORADO NEUROLOGY

1400 S. Potomac, Suite 201
Aurora Colorado

All Pro Fire Protection, LLC.
PO Box 352
Centennial, CO 80122
303 656 6137
State Contractor #: 20-S-04230

Job Name: COMM-CON #:

City of Aurora Building Division
Counter Permit intake by: JLG
Date: Sep 02, 2020
RSN: 1483793
Permit: 2020-1858277-CT
2015 INTERNATIONAL CODES & 2020 NEC Scope of permit to be field

Permit: 2020-1858277-CT
RSN: 1483793

Model F1
Model F1 Recessed Standard Response Sprinklers

Bulletin 117Rev.R

The Designer® Model F1 Sprinkler

Standard Upright
Standard Pendent
Extended Coverage Pendent
Conventional
Vertical Sidewall
Horizontal Sidewall
– HSW 1 Deflector
Horizontal Sidewall Extended Coverage
– EC-6 Deflector

The Designer®II Model F1 Recessed Sprinkler

Recessed Pendent
Recessed Extended Coverage Pendent
Recessed Extended Coverage Horizontal Sidewal

Approval Organizations

1. Underwriters Laboratories Inc.
2. Underwriters' Laboratories of Canada
3. Factory Mutual Research Corp.
4. Loss Prevention Council
5. NYC BS&A No. 587-75-SA
6. Pleniere Assemblee
7. Verband der Schadenversicherer
8. NYC MEA 258-93-E

UL Listing Category

Sprinklers, Automatic & Open (VNIV)

Patents: US Patent No. 6,374,920 Applies to Model F1 Vertical Sidewall Sprinklers

Product Description

The F1 Glass Bulb Sprinkler combines the durability of a standard sprinkler with the attractive low profile of a decorative sprinkler. Whether installed on exposed piping or in an office ceiling, it is functional and attractive. The Horizontal and Vertical Sidewall Sprinklers provide an equally attractive appearance when ceiling piping cannot be used.

Beautifully versatile is the description for the Reliable Model F1 Recessed Designer glass bulb sprinkler. Recessing The Designer® enhances its already low profile decorative appearance, and facilitates a rapid and perfect installation.

Model F1 Recessed Designer's escutcheon is highly adjustable. The two piece construction makes field installation a very easy and rapid task. This also allows ceiling panels to later be removed without shutting down the fire protection system, thus facilitating maintenance of above ceiling services.

The Designer® Automatic Sprinkler utilizes a frangible glass bulb. The glass bulb consists of an accurately controlled amount of special fluid hermetically sealed inside of a precisely manufactured glass capsule. This glass bulb is specially constructed to provide fast thermal response.


Upright


Pendent


Vertical Sidewall


Conventional

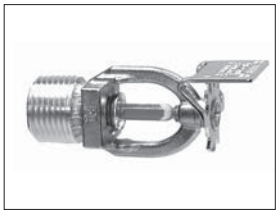
Horizontal Sidewall


Recessed Pendent

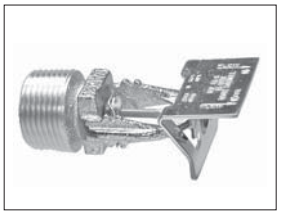
Extended Coverage Horizontal Sidewall


Recessed Extended Coverage Horizontal Sidewall


Extended Coverage Pendent


Recessed Extended Coverage Pendent

At normal temperatures, the glass bulb contains the fluid in both the liquid phase and in the vapor phase. The vapor phase can be seen as a small bubble. As heat is applied, the liquid expands forcing the bubble smaller and smaller as the liquid pressure increases. Continued heating forces the liquid to push out against the bulb, causing the glass to shatter, opening the waterway and allowing the deflector to distribute the discharging water.

The F1 Sprinkler temperature rating is identified by the color of the glass bulb capsule as well as frame color where applicable.

Model F1 Upright, Pendent & Conventional Sprinklers

Installation Wrench: Model D Sprinkler Wrench



Upright



Pendent



Conventional

Installation Data:

Nominal Orifice	Thread Size	Nominal K Factor		Sprinkler Height	Approval Organization	Sprinkler Identification Numbers (SIN)	
		US	Metric			Upright	Pendent
Standard-Upright (SSU) and Pendent (SSP) Deflectors Marked to Indicate Position							
½″ (15mm)	½″ NPT (R½)	5.6	80	2.2″ (56mm)	1,2,3,4,5,6,7	R1725	R1715
17/32″ (20mm)	¾″ NPT (R¾) [1]	8.0	115	2.3″ (58mm)	1,2,3,4,7,8	R1722	R1712
½″ (15mm)[3]	½″ NPT (R½)	5.6	80	2.2″ (56mm)	7		
17/32″ (20mm)[3]	¾″ NPT (R¾)	8.0	115	2.3″ (58mm)	7		
7/16″ (11mm)	½″ NPT (R½)	4.2	60	2.2″ (56mm)	1,2,8	R1723	R1713
3/8″ (10mm)	½″ NPT (R½) [2]	2.8	40	2.54″ (65mm)	1,2,8	R1721	R1711
10mm XLH	R 3/8	4.2	60	56.1mm	4,6,7	R1724	R1714
Conventional-Install in Upright or Pendent Position							
10mm XLH	R 3/8	4.2	60	56.1mm	——	R1774	
15mm	½″ NPT (R½)	5.6	80	56.1mm	4,6,7	R1775	
20mm	¾″ NPT (R¾)	8.0	115	58.1mm	4,7	R1772	

[1] LPC Approval up 286°F (141°C)
[2] FM Approval for SSU up to and including 200°F (93°C) only.
[3] VdS Approval for Intermediate Response 155°F (68°C) only.

Model F1 Recessed Pendent Sprinkler

Installation Wrench: Model RC1 Sprinkler Wrench



F1 Recessed

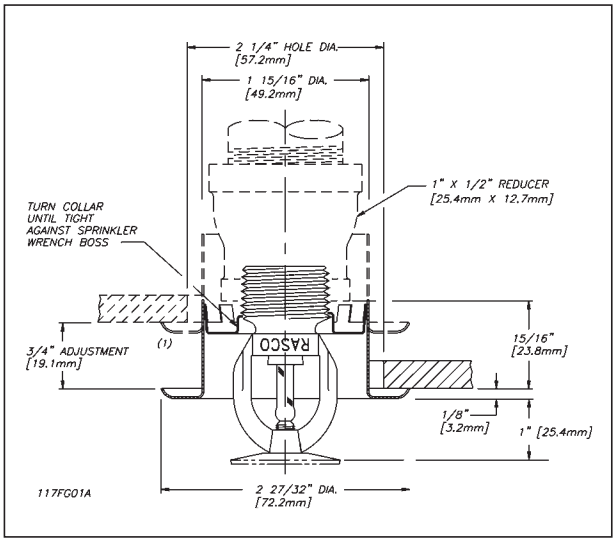

(1) When installed directly into a tee, the escutcheon dimension's adjustment will be reduced.

Installation Data:

Nominal Orifice	Thread Size	Nominal K Factor		Sprinkler Height	Approval Organizations	Sprinkler Identification Numbers (SIN)
		US	Metric			
½″ (15mm)	½″ NPT (R½)	5.6	80	2.2″ (56mm)	1,2,3(2),4,5,7	R1715
17/32″ (20mm)	¾″ NPT (R¾)	8.0	115	2.3″ (58mm)	1,2,3(2),4,8	R1712
½″ (15mm)(4)	½″ NPT (R½)	5.6	80	2.2″ (56mm)	7	
17/32″ (20mm)(4)	¾″ NPT (R¾)	8.0	115	2.3″ (58mm)	7	
7/16″ (11mm)	½″ NPT (R½)	4.2	60	2.2″ (56mm)	1,2,8	R1713
⅜″ (10mm)	½″ NPT (R½)	2.8	40	2.2″ (56mm)	1,2,8	R1711
10mm	R ⅜	4.2	60	56.1mm	4(3),7	R1714

(2) FM Approval
- Light Hazard – No Limitations.
- Ordinary Hazard – Groups 1 & 2, Wet Systems only.

(3) LPC Approval is for 57°C through 93°C ratings.

(4) VdS Approval for Intermediate Response 155°F (68°C) only.

Model F1 Vertical Sidewall Sprinkler

Installation Wrench: Model D Sprinkler Wrench
Installation Position: Upright or Pendent
Approval Type: Light Hazard Occupancy



Vertical Sidewall

U.S. Patent No. 6,374,920

Installation Data:

Nominal Orifice	Thread Size	Nominal K Factor		Sprinkler Height	Approval Organizations	Sprinkler Identification Numbers (SIN)
		US	Metric			
½″ (15mm)	½″ NPT (R½)	5.6	80	2.2″ (56.1mm)	1,2,3,4[1], 6 ,8	R1785

[1] LPC Approval is pendent only, 57°C through 141°C ratings.

Sprinkler Type	Deflector to Ceiling Distance (Min. - Max.)
Upright	4"(102mm) - 12"(305mm)
Pendent	4"(102mm) - 12"(305mm)

Model F1 Horizontal Sidewall Sprinkler

Deflector: HSW 1
Installation Wrench: Model D Sprinkler Wrench

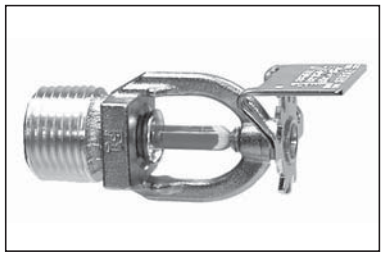

Horizontal Sidewall

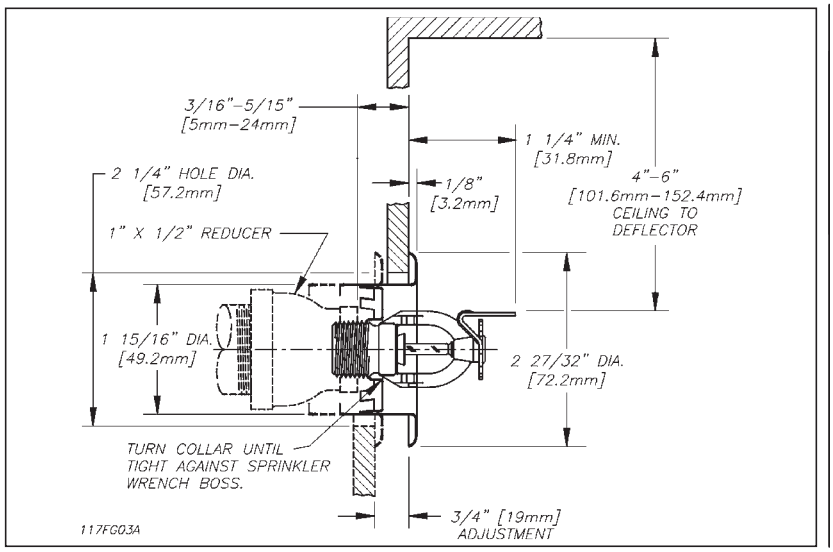

Installation Data:

Nominal Orifice	Thread Size	Nominal K Factor		Sprinkler Length	Approval Organizations		Sprinkler Identification Numbers (SIN)
		US	Metric		Light Hazard	Ordinary Hazard	
½″ (15mm)	½″ NPT (R½)	5.6	80	2.63″ (67mm)	1,2,3,5	1,2,5	R1735

Note: UL and ULC Listing permits use with F1 escutcheons, light hazard only.

Model F1 Extended Coverage Pendent Sprinkler

Deflector: EC Pendent
Installation Wrench: Model D Sprinkler Wrench
Approval Type: Extended Coverage — Light Hazard Occupancy



Extended Coverage Pendent

Installation Data:

Nominal Orifice	Thread Size	Nominal K Factor		Sprinkler Height	Approval Organizations	Temperature Rating		Sprinkler Identification Numbers (SIN)
		US	Metric			°F	°C	
17/32″ (20mm)	3/4″ NPT (R3/4)	8.0	115	2.2″ (56mm)	1,2,8	135; 155	57; 68	R1742
1/2″ (15mm)	1/2″ NPT (R1/2)	5.6	80	2.2″ (56mm)	1,2,8	135; 155	57; 68	R1745

COVERAGE AREA							
Flow Rate		Pressure Nominal				Max. Area Width x Length	
		K=8.0 (115)		K=5.6 (80)			
gpm	L/min	psi	bar	psi	bar	ft. x ft.	m x m
26	98.4	10.6	0,7	21.6	1,5	16 x 16	4.9 x 4.9
33	125.0	17.0	1,2	34.7	2,4	18 x 18	5.5 x 5.5
40	151.4	25.0	1,7	51.0	3,5	20 x 20	6.0 x 6.0

Model F1 Recessed Extended Coverage Pendent Sprinkler

Deflector: EC Pendent
Installation Wrench: Model RC1 Sprinkler Wrench
Approval Type: Extended Coverage — Light Hazard Occupancy



Extended Coverage Recessed

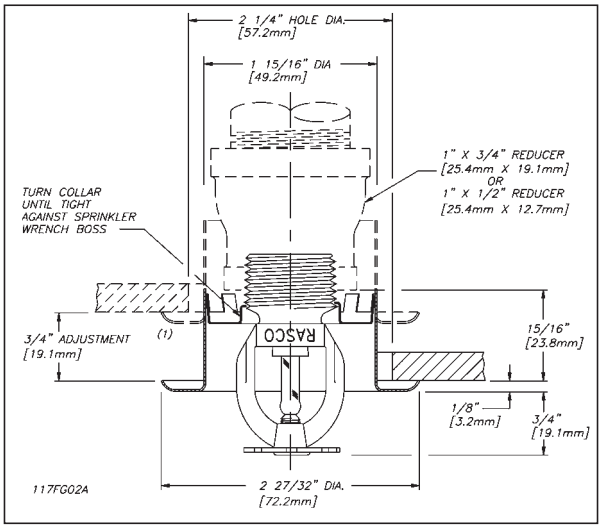

(1) When installed directly into a tee, the escutcheon dimension's adjustment will be reduced.

Installation Data:

Nominal Orifice	Thread Size	Nominal K Factor		Sprinkler Height	Approval Organizations	Temperature Rating		Sprinkler Identification Numbers (SIN)
		US	Metric			°F	°C	
17/32″ (20mm)	3/4″ NPT (R3/4)	8.0	115	2.2″ (56mm)	1,2,8	135; 155	57; 68	R1742
1/2″ (15mm)	1/2″ NPT (R1/2)	5.6	80	2.2″ (56mm)	1,2,8	135; 155	57; 68	R1745

COVERAGE AREA							
Flow Rate		Pressure Nominal				Max. Area Width x Length	
		K=8.0 (115)		K=5.6 (80)			
gpm	L/min	psi	bar	psi	bar	ft. x ft.	m x m
26	98.4	10.6	0,7	21.6	1,5	16 x 16	4.9 x 4.9
33	125.0	17.0	1,2	34.7	2,4	18 x 18	5.5 x 5.5
40	151.4	25.0	1,7	51.0	3,5	20 x 20	6.0 x 6.0

Model F1 Extended Coverage Horizontal Sidewall Sprinkler

Deflector: EC-6
Glass Bulb: 3mm 155°F (68°C) Standard, Unless 5mm 135°F (57°C) is Specified
Installation Wrench: Model D Sprinkler Wrench
Approval Type: Extended Coverage — Light Hazard Occupancy

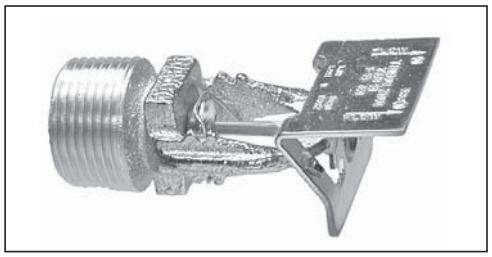

Extended Coverage Horizontal Sidewall

Installation Data:

Nominal Orifice	Thread Size	K Factor		Sprinkler Height	Approval Organizations	Temperature Rating		Sprinkler Identification Numbers (SIN)
		US	Metric			°F	°C	
17/32″ (20mm)	¾″ NPT (R¾)	8.0	115.3	2.75″ (70mm)	1,2,8	135 (5mm bulb)	57	R1762
						155 (3mm bulb)	68	

COVERAGE AREA						
Flow Rate		Pressure		Max. Area Width x Length		Deflector to Ceiling Dimensions (Min. - Max.)
gpm	L/min	psi	bar	ft. x ft.	m x m	
36	136.3	20.3	1,4	16 x 22	4.9 x 6.7	4”(102mm) - 6”(152mm)
39	147.6	23.8	1,6	16 x 24	4.9 x 7.3	4”(102mm) - 6”(152mm)

Permit: 2020-1858277-CT
RSN: 1483793
Page 8 of 13

Model F1 Recessed Extended Coverage Horizontal Sidewall Sprinkler

Deflector: EC-6
Glass Bulb: 3mm 155°F (68°C) Only
Installation Wrench: Model GFR1 Sprinkler Wrench
Approval Type: Extended Coverage — Light Hazard Occupancy

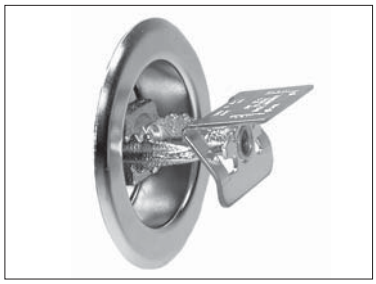

Recessed Extended Coverage
Horizontal Sidewall

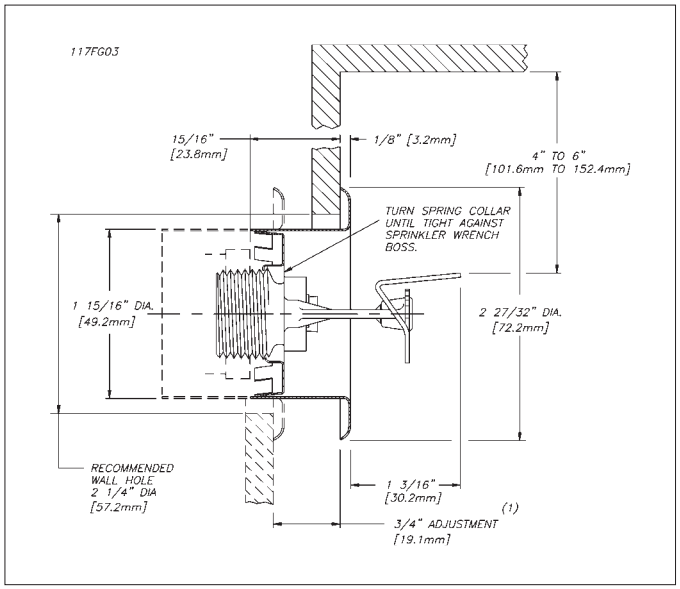

(1) When installed directly into a tee, the escutcheon dimension's adjustment will be reduced.

Installation Data:

Nominal Orifice	Thread Size	K Factor		Sprinkler Height	Approval Organizations	Temperature Rating		Sprinkler Identification Numbers (SIN)
		US	Metric			°F	°C	
17/32" (20mm)	3/4" NPT (R3/4)	8.0	115.3	2.75" (70mm)	1,2,8	155	68	R1762

COVERAGE AREA						
Flow Rate		Pressure		Max. Area Width x Length		Deflector to Ceiling Dimensions (Min. - Max.)
gpm	L/min	psi	bar	ft. x ft.	m x m	
36	136.3	20.3	1,4	16 x 22	4.9 x 6.7	4"(102mm) - 6"(152mm)
39	147.6	23.8	1,6	16 x 24	4.9 x 7.3	4"(102mm) - 6"(152mm)

Permit: 2020-1858277-CT
RSN: 1483793
Page 9 of 13

Model F1 & F1 Recessed Sprinklers

Application

Model F1 and F1 Recessed sprinklers are used in fixed fire protection systems: Wet, Dry, Deluge or Preaction. Care must exercised that the orifice size, temperature rating, deflector style and sprinkler type are in accordance with the latest published standards of the National Fire Protection Association or the approving Authority Having Jurisdiction.

Installation

Model F1 sprinklers are standard response sprinklers intended for installation as specified in NFPA 13. They must also be installed with the Model D Sprinkler Wrench specifically designed by Reliable for use with these sprinklers.

The Model F1 Recessed Sprinklers are to be installed with a maximum recess of ¾ inch (19mm). The Model F1 Escutcheon illustrated is the only recessed escutcheon to be used with the Model F1 Pendent and EC Sprinklers. The use of any other recessed escutcheon will void all approvals and negate all warranties. When installing Model F1 Recessed Pendent, EC Pendent, and EC HSW Sprinklers, use the Model GFR1 Sprinkler Wrench. Any other type of wrench may damage these sprinklers.

Glass bulb sprinklers have orange covers to protect the bulb during the installation process. REMOVE THIS PROTECTION ONLY AFTER THE SYSTEM HAS BEEN HYDROSTATICALLY TESTED AND, WHEN APPLICABLE, THE ESCUTCHEONS HAVE BEEN INSTALLED. RASCO wrenches are designed to install sprinklers when covers are in place.

Ordering Information

Specify:

1. Sprinkler Model
2. Sprinkler Type
3. Orifice Size
4. Deflector Type
5. Temperature Rating:
   Specify Bulb Size when ordering Model F1 EC HSW Sprinkler.
6. Sprinkler Finish
7. Escutcheon Finish (where applicable)

Maintenance

The Models F1 and F1 Recessed Sprinklers should be inspected quarterly and the sprinkler system maintained in accordance with NFPA 25. Do not clean sprinklers with soap and water, ammonia or any other cleaning fluid. Remove any sprinkler which has been painted (other than factory applied) or damaged in any way. A stock of spare sprinklers should be maintained to allow quick replacement of damaged or operated sprinklers. Prior to installation, sprinklers should be maintained in the original cartons and packaging until used to minimize the potential for damage to sprinklers that would cause improper operation or non-operation.

Temperature Ratings

Classification	Sprinkler Temperature		Maximum Ambient Temperature		Bulb Color
	°F	°C	°F	°C	
Ordinary	135	57	100	38	Orange
Ordinary	155	68	100	38	Red
Intermediate	175	79	150	66	Yellow
Intermediate	200	93	150	66	Green
High [1]	286	141	225	107	Blue
Extra High [1]	360	182	300	149	Mauve

[1] Not Available For F1 Recessed

Patents: U.S. Patent No. 6,374,920
Applies to Model F1 Vertical Sidewall Sprinklers.

Finishes [1]

Standard Finishes	
Sprinkler	**Escutcheon**
Bronze Chrome White Polyester Coated[3]	Brass Chrome White Painted
Special Application Finishes	
Sprinkler	**Escutcheon**
Bright Brass[2] [6] Black Plated [6] Black Paint [3][6] Off White [3] [6] Satin Chrome Lead Plated [3] [4] Wax Coated [3] [4] [5] Wax Over Lead [3] [4] [5]	Bright Brass Black Plated Black Paint Off White Satin Chrome

[1] Other colors and finishes are available on special order. Consult factory for details.
[2] 200°F (93°C) maximum.
[3] UL and ULC Listed, and NYC Approved Only.
[4] 155°F to 200°F (68°C to 93°C) ratings only.
[5] 286°F (141°C) Sprinklers may be coated for ambient conditions not exceeding 150°F (66°C).
[6] LPC approved for 10mm and 15mm sprinklers only.

The equipment presented in this bulletin is to be installed in accordance with the latest pertinent Standards of the National Fire Protection Association, Factory Mutual Research Corporation, or other similar organizations and also with the provisions of governmental codes or ordinances whenever applicable.

Products manufactured and distributed by Reliable have been protecting life and property for over 80 years, and are installed and serviced by the most highly qualified and reputable sprinkler contractors located throughout the United States, Canada and foreign countries

Manufactured by

Reliable®

The Reliable Automatic Sprinkler Co., Inc.

(800) 431–1588 Sales Offices
(800) 848–6051 Sales Fax
(914) 668–3470 Corporate Offices
www.reliablesprinkler.com Internet Address

Recycled Paper

Revision lines indicate updated or new data.

EG printed in USA. 5/05 P/N 9999970011

CAST IRON THREADED FITTINGS

Class 125 (Standard)

FIGURE 351
90° Elbow



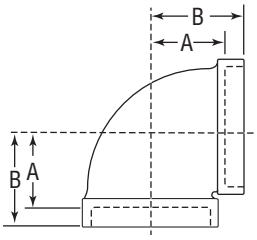

Size		A		B		Unit Weight Black	
NPS	*DN*	in	*mm*	in	*mm*	lbs	*kg*
1/4	*8*	1/2	*13*	13/16	*22*	0.16	*0.07*
3/8	*10*	9/16	*14*	15/16	*24*	0.25	*0.11*
1/2	*15*	11/16	*17*	1 1/8	*29*	0.40	*0.18*
3/4	*20*	13/16	*22*	1 15/16	*33*	0.60	*0.27*
1	*25*	15/16	*24*	1 1/2	*38*	0.92	*0.42*
1 1/4	*32*	1 1/8	*29*	1 3/4	*44*	1.44	*0.65*
1 1/2	*40*	1 5/16	*33*	1 15/16	*49*	1.95	*0.88*
2	*50*	1 9/16	*40*	2 1/4	*57*	3.13	*1.42*
2 1/2	*65*	1 13/16	*47*	2 11/16	*68*	4.94	*2.24*
3	*80*	2 3/16	*56*	3 1/8	*79*	7.21	*3.27*
3 1/2	*90*	2 7/16	*62*	3 7/16	*87*	9.67	*4.39*
4	*100*	2 11/16	*68*	3 13/16	*98*	12.17	*5.52*
5	*125*	3 5/16	*84*	4 1/2	*114*	21.46	*9.73*
6	*150*	3 7/8	*98*	5 1/8	*130*	31.33	*14.21*
8	*200*	5 3/16	*132*	6 9/16	*167*	64.56	*29.28*

Note: See following page for pressure-temperature ratings.

PROJECT INFORMATION	APPROVAL STAMP
Project:	☐ **Approved**
Address:	☐ **Approved as noted**
Contractor:	☐ **Not approved**
Engineer:	**Remarks:**
Submittal Date:	
Notes 1:	
Notes 2:	

Permit: 2020-1858277-CT
RSN: 1483793
Page 11 of 13

CAST IRON THREADED FITTINGS



Anvil standard and extra heavy cast iron threaded fittings are manufactured in accordance with ASME B16.4. Plugs and bushings are manufactured in accordance with ASME B16.14.

NOTE: Figure 367 Concentric Reducers do not meet the overall length requirement of ASME B16.4. All other dimensions are in compliance.

c UL us

FM APPROVED

For Listings/Approval Details and Limitations, visit our website at www.anvilintl.com or contact an Anvil Sales Representative.

Cast Iron Threaded Fittings
Pressure - Temperature Ratings

Temperature		Pressure			
		Class 125		Class 250	
(°F)	*(°C)*	psi	*bar*	psi	*bar*
-20° to 150°	*-28.9 to 65.6*	175	*12.1*	400	*27.6*
200°	*93.3*	165	*11.4*	370	*25.5*
250°	*121.1*	150	*10.3*	340	*23.4*
300°	*148.9*	140	*9.7*	310	*21.4*
350°	*176.7*	125	*8.6*	300	*20.7*
400°	*204.4*	–	–	250	*17.2*

Standards and Specifications

	Dimensions	Material	Galvanizing*	Thread	Pressure Rating
CAST IRON THREADED FITTINGS					
Class 125	ASME B16.4	ASTM A-126 (A)	ASTM A-153	ASME B1.20.1	ASME B16.4
Class 250	ASME B16.4	ASTM A-126 (A)	ASTM A-153	ASME B1.20.1	ASME B16.4
CAST IRON PLUGS AND BUSHINGS					
	ASME B16.14	ASTM A- 126 (A)	ASTM A-153	ASME B1.20.1	ASME B16.14

* ASTM B 633. Type I, SC 4, may be supplied as alternate zinc coating per applicable ASME B16 product standard.

Permit: 2020-1858277-CT
RSN: 14837938

General Assembly of Threaded Fittings

1) Inspect both male and female components prior to assembly.
   - Threads should be free from mechanical damage, dirt, chips and excess cutting oil.
   - Clean or replace components as necessary.

2) Application of thread sealant
   - Use a thread sealant that is fast drying, sets-up to a semi hard condition and is vibration resistant. Alternately, an anaerobic sealant may be utilized.
   - Thoroughly mix the thread sealant prior to application.
   - Apply a thick even coat to the male threads only. Best application is achieved with a brush stiff enough to force sealant down to the root of the threads.

3) Joint Makeup
   - For sizes up to and including 2" pipe, wrench tight makeup is considered three full turns past handtight. Handtight engagement for 1/2" through 2" thread varies from 4 1/2 turns to 5 turns.
   - For 2 1/2" through 4" sizes, wrench tight makeup is considered two full turns past handtight. Handtight engagement for 2 1/2" through 4" thread varies from 5 1/2 turns to 6 3/4 turns.

Eddy Flow

The Cost Effective Replacement for Schedule 10

Realizing the growing need of fire protection systems in commercial and residential construction, Bull Moose Tube has added Eddy Flow to its comprehensive line of sprinkler pipe products.

Eddy Flow is a specially engineered replacement for schedule 10, offering better flow characteristics while providing design flexibility. This product is FM approved, as well as UL listed (for U.S. and Canada) for roll grooving and welding for use in fire protection systems with a working pressure of 300 psi or less. Please check with appropriate sources for up-to-date listings and approval information.

As an added benefit, it is more economical to use than schedule 10 due to reduced delivery costs and ease of handling. Furthermore, Eddy Flow's larger ID provides an opportunity for downsizing and further cost savings.

COMPARISON

		INSIDE DIAMETER			C.R.R.*	
Nominal Pipe Size (in)	O.D. (in)	Eddy Flow (in)	Schedule 10 (in)	Schedule 40 (in)	Eddy Flow	Schedule 40
1 1/4	1.660	1.530	1.442	1.380	1.98	1.00
1 1/2	1.900	1.728	1.682	1.610	3.44	1.00
2	2.375	2.203	2.157	2.067	2.78	1.00
2 1/2	2.875	2.705	2.635	2.469	1.66	1.00
3	3.500	3.334	3.260	3.068	1.00	1.00
4	4.500	4.310	4.260	4.026	1.00	1.00

* *Corrosion Resistance Ratio*

BENEFITS

- ***Dual Certified to ASTM A135 and A795.***
- ***FM Approved for roll grooved, and welded, and plain-end application in wet systems.***
- ***UL Listed (for U.S. and Canada) for joining by welding or by listed rubber gasketed fittings for use in wet, dry, preaction, and deluge type sprinkler systems.***
- ***UL Listed (for US and Canada) and FM Approved for use with Victaulic® FIT® Fittings in plain end applications.***
- ***Lightweight - saves shipping costs, and offers easier handling.***
- ***Can be used with roll grooved couplings or welded outlets for pressures up to 300 psi.***
- ***Floor stock available in various lengths produced in Casa Grande (AZ), Gerald (MO), and Masury (OH). Also can be ordered in custom lengths..***
- ***Can be used for wet and dry* systems.***

** Eddy Flow can be hot dipped galvanized to meet FM's requirement for dry systems.*

PIPE PREPARATION

For proper operation, all pipe surfaces should be cleaned prior to installation. In order to provide a leak-tight seat for the gasket, pipe surfaces should be free from indentations and projections from the end of the pipe to the groove. All loose paint, scale, dirt, chips, grease, and rust must be removed prior to installation. Failure to take these important steps may result in improper coupling assembly, causing leakage. Also, check the manufacturer's instructions for the specific fitting used.

BULL MOOSE TUBE COMPANY
A CAPARO company

1819 Clarkson Road
Chesterfield, MO 63017
(800) 325-4467
FAX: (636) 537-2645
www.bullmoosetube.com
e-mail:sales@bullmoosetube.com

For additional information, contact your salesperson today at (800) 325-4467 or (636) 537-2600 in the USA, or from Canada call (800) 882-4666

All information contained herein is accurate as known at the time of publication. Bull Moose Tube reserves the right to change product specifications without notice and without incurring obligation.