CAUTION: IF THIS SHEET IS NOT 30"x42" IT IS A REDUCED PRINT

1444 S. POTOMAC

2ND FLOOR WHITE BOX
AURORA, COLORADO 80012

(For Tenant Improvement Permit Only)

ABBREVIATIONS

&	And	F.A.	Fire Alarm	PRCST.	Pre-cast
∠	Angle	F.B.	Flat Bar	PL.	Plate
@	At	F.D.	Floor Drain	P.LAM.	Plastic Laminate
℄	Centerline	FDN.	Foundation	PLAS.	Plaster
~	Diameter or Round	F.E.	Fire Extinguisher	PLYWD.	Plywood
#	Pound or Number	F.E.C.	Fire Extinguisher Cab	PR.	Pair
(E)	Existing	F.H.C.	Fire Hose Cabinet	PT.	Point
		FIN.	Finish	P.T.D	Paper Towel Dispenser
		FL.	Floor	P.T.D/R	Combination Paper Towel
ACOUS	Acoustical	FLASH.	Flashing	PTN.	Partition
A.D.	Area Drain	FLUOR.	Fluorescent	P.T.R.	Paper Towel Receptacle
ADJ.	Adjustable	F.O.C.	Face of Concrete	P.J.	Panel Joint
AGGR.	Aggregate	F.O.F.	Face of Finish		
AL.	Aluminum	F.O.M.	Face of Mullion	Q.T.	Quarry Tile
APPROX.	Approximate	F.O.SH.	Face of Sheathing	R.	Riser
ARCH.	Architectural	FPRF.	Fireproof	RAD.	Radius
ASB.	Asbestos	F.S.	Full Size	R.D.	Roof Drain
ASPH.	Asphalt	FT.	Foot or Feet	REF.	Reference
		FTG.	Footing	REFR.	Refrigerator
BD.	Board	FURR.	Furring	RGTR.	Register
BITUM.	Bituminous	FUT.	Future	REINF.	Reinforced
BLDG.	Building			REQ.	Required
BLK.	Block	GA.	Gauge	RESIL.	Resilient
BLKG.	Blocking	GALV.	Galvanized	RM.	Room
BM.	Beam	G.B.	Grab Bar	R.O.	Rough Opening
B.O.C.	Bottom of Concrete	GL.	Glass	RWD.	Redwood
B.O.M.	Bottom of Mullion	GND.	Ground	R.W.L.	Rain Water Leader
B.O.P.	Bottom of Panel	GR.	Grade		
B.O.R.	Bottom of Reveal	GYP.	Gypsum	S.	South
BOT.	Bottom			SAF	Self Adhered Flashing
		H.B.	Hose Bibb	S.C.	Solid Core
CAB.	Cabinet	H.C.	Hollow Core	S.C.D.	Seat Cover Dispenser
C.B.	Catch Basin	HDWD.	Hardwood	SCHED.	Schedule
CEM.	Cement	HDWE.	Hardware	S.D.	Soap Dispenser
CER.	Ceramic	H.M.	Hollow Metal	SECT.	Section
C.I.	Cast Iron	HORIZ.	Horizontal	SH.	Shelf
C.G.	Corner Guard	HR.	Hour	SHR.	Shower
CLG.	Ceiling	HGT.	Height	SHT.	Sheet
CLKG.	Caulking			SIM.	Similar
CLO.	Closet	I.D.	Inside Diameter (Dim.)	S.N.D.	Sanitary Napkin Disp.
CLR.	Clear	INSUL.	Insulation	S.N.R.	Sanitary Napkin Recept.
C.O.	Cased Opening	INT.	Interior	SPEC.	Specification
COL.	Column			SQ.	Square
C.O.M.	Center of Mullion	Jan.	Janitor	S.S.T.	Stainless Steel
CONC.	Concrete	JT.	Joint	S.SK.	Service Sink
CONN.	Connection	KIT.	Kitchen	STA.	Station
CONSTR.	Construction	K.O.	Knock Out	STD.	Standard
CONT.	Continuous			STL.	Steel
C.O.R.	Center of Reveal	LAB.	Laboratory	STOR.	Storage
CORR.	Corridor	LAM.	Laminate	STRL.	Structural
CTSK.	Countersunk	LAV.	Lavatory	SUSP.	Suspended
CNTR.	Counter	LKR.	Locker	SYS.	Symmetrical
CTR.	Center	LT.	Light	TRD.	Tread
				T.B.	Towel Bar
DBL.	Double	MAX.	Maximum	T.C.	Top of Curb
DEPT.	Department	M.C.	Medicine	TEL.	Telephone
D.F.	Drinking Fountain	MECH.	Mechanical	TER.	Terrazzo
DET.	Detail	MEMB.	Membrane	T. & G.	Tongue and Groove
DIA.	Diameter	MET.	Metal	THK.	Thick
DIM.	Dimension	MFR.	Manufacturer	T.O.C.	Top of Concrete
DISP.	Dispenser	MH.	Manhole	T.O.P.	Top of Panel
DN.	Down	MIN.	Minimum	T.O.R.	Top of Reveal
D.O.	Door Opening	MIR.	Mirror	T.O.RC.	Top of Deep Recess
DR.	Door	MISC.	Miscellaneous	T.O.M.	Top of Mullion
DWR.	Drawer	M.O.	Masonry Opening	T.O.W.	Top of Wall
DS.	Downspout	MTD.	Mounted	T.P.	Top of Pavement
D.S.P.	Dry Standpipe	MUL.	Mullion	T.P.D.	Toilet Paper Dispenser
DWG	Drawing			T.V.	Television
E.	East	N.	North	T.W.	Top of Wall
EA.	Each	N.I.C.	Not In Contract	TYP.	Typical
E.J.	Expansion Joint	NO.	Number	UNF.	Unfinished
EL.	Elevation	NOM.	Nominal	U.O.N.	Unless Otherwise Noted
ELEC.	Electrical	N.T.S.	Not To Scale	UR.	Urinal
ELEV.	Elevator			VERT.	Vertical
EMER.	Emergency	O.A.	Overall	VEST.	Vestibule
ENCL.	Enclosure	OBS.	Obscure	W.	West
E.P.	Electrical Panelboard	O.C.	On Center	W/	With
EQ.	Equal	O.D.	Outside Diameter (Dim.)	W.C.	Water Closet
EQPT.	Equipment	OFF.	Office	WD.	Wood
E.W.C.	Electric Water Cooler	OPNG.	Opening	W/O	Without
EXST.	Existing	OPP.	Opposite	WPM	Waterproofing Membrane
EXPO.	Exposed			WRB	Wheather/Water Resistive Barrier
EXP.	Expansion			WSCT.	Wainscot
EXT.	Exterior			WT.	Weight

SYMBOLS

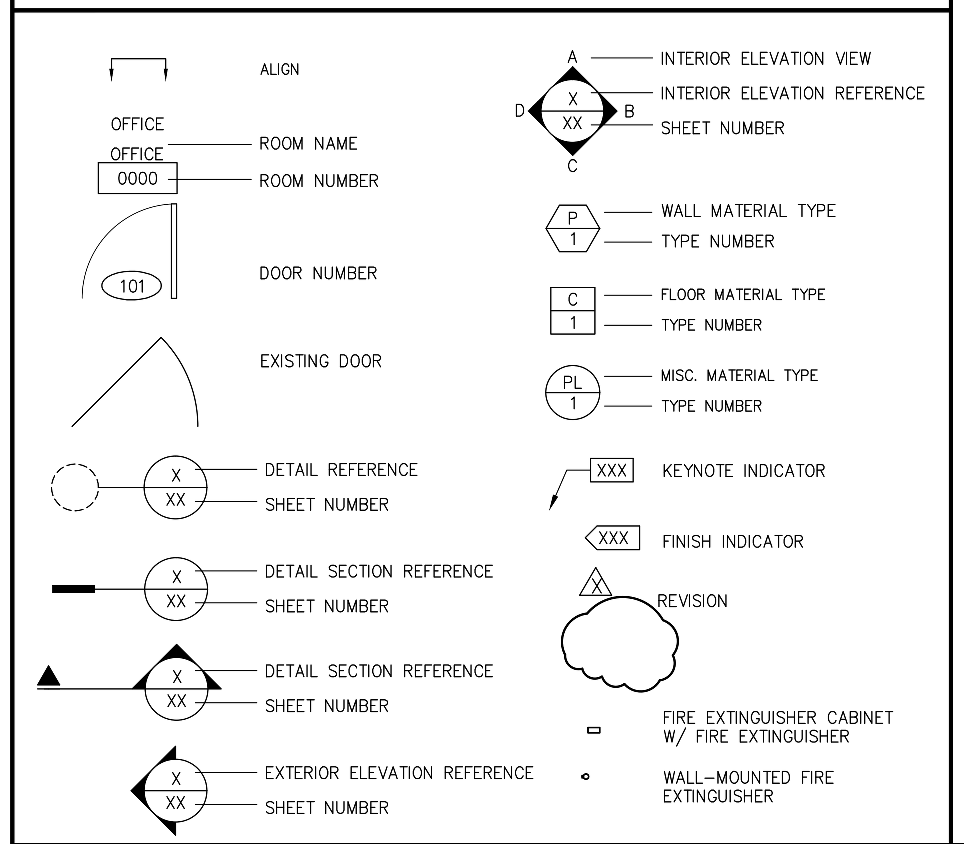

GENERAL PROJECT NOTES

GENERAL NOTES:

1. ALL WORK SHALL BE PERFORMED SO AS TO COMPLY WITH ALL LEGAL, INDUSTRY AND PROJECT-SPECIFIC REQUIREMENTS AND STANDARDS INCLUDING WITHOUT LIMITATION OF THE FOLLOWING:
   - A. ALL APPLICABLE BUILDING CODES
   - B. ALL APPLICABLE SPECIALTY CODES INCLUDING THE MOST CURRENT ISSUES AND SUPPLEMENTS
   - C. THE PROJECT MANUAL AND ASSOCIATED SPECIFICATIONS
   - D. THE MANUFACTURER'S REQUIREMENTS OR RECOMMENDATIONS
   - E. ALL APPLICABLE LANDLORD BUILDING STANDARDS
2. IN USING THESE PLANS FOR BIDDING OR CONSTRUCTION PURPOSES, ALL CONTRACTORS ARE REQUIRED TO REVIEW AND TREAT THEM AS A WHOLE IN ORDER TO IDENTIFY ALL REQUIREMENTS THAT DIRECTLY OR INDIRECTLY AFFECT THEIR PORTION OF THE WORK, EVEN REQUIREMENTS LOCATED IN SECTIONS DESIGNATED AS APPLICABLE TO OTHER TRADES OR IN DOCUMENTS PROVIDED BY OTHER MEMBERS OF THE PROJECT DESIGN TEAM. UNLESS EXPRESSLY PROVIDED OTHERWISE, THE INTENT IS TO INCLUDE ALL LABOR, MATERIALS, PRODUCTS AND SERVICES NECESSARY OR APPROPRIATE FOR THE COMPLETED PROJECT AS CALLED FOR OR REASONABLY IMPLIED FROM THE PLANS AND SPECIFICATIONS PROVIDED BY THE PROJECT'S DESIGN TEAM. IN CASE OF CONFLICTS OR OMISSIONS, THE AFFECTED CONTRACTOR IS REQUIRED TO EITHER OBTAIN DIRECTION FROM AN APPROPRIATE REPRESENTATIVE OF THE OWNER, OR OTHERWISE TO APPLY THE MORE STRINGENT OR COSTLY STANDARD.
3. IN INTERPRETING THESE PLANS, THE FOLLOWING GENERAL RULES APPLY:
   - A. WRITTEN DIMENSIONS SHALL TAKE PRECEDENCE OVER SCALED DRAWINGS
   - B. SPECIFIC NOTES AND DETAILS SHALL TAKE PRECEDENCE OVER GENERAL NOTES AND TYPICAL DETAILS
   - C. WORK NOT PARTICULARLY SHOWN OR SPECIFIED SHALL BE THE SAME AS SIMILAR PARTS THAT ARE SHOWN AND SPECIFIED
   - D. WORK SHOWN AS "NIC" IS FOR REFERENCE ONLY AND THE RESPONSIBILITY OF THE CONTRACTOR ONLY TO THE EXTENT THAT THIS WORK MAY REQUIRE SOME REASONABLE PROTECTION OR COORDINATION EFFORTS.
4. THESE PLANS AND SPECIFICATIONS ARE INTENDED TO REPRESENT ONLY THE FINISHED CONSTRUCTION. THE CONTRACTOR IS SOLELY RESPONSIBLE FOR ALL CONSTRUCTION AND DEMOLITION MEANS, METHODS, TECHNIQUES, SEQUENCES AND PROCEDURES INCLUDING ANY AND ALL SAFETY PRECAUTIONS AND PROGRAMS, AND SHALL INDEMNIFY TO THE FULLEST EXTENT ALLOWED BY LAW THE OWNER AND THE PROJECT DESIGN TEAM FROM AND AGAINST ANY AND ALL RELATED CLAIMS AND LIABILITY.
5. THESE PLANS AND SPECIFICATIONS ARE INTENDED TO SET FORTH THE REQUIREMENTS FOR CONSTRUCTION IN ONLY AN INDUSTRY-STANDARD LEVEL OF QUALITY AND DETAIL, AND THEY ARE INTENDED TO BE SUPPLEMENTED BY APPROPRIATE REQUESTS FOR INFORMATION (RFIs). ERRORS AND OMISSIONS ARE TO BE EXPECTED AND ANTICIPATED, AND ALL CONTRACTORS ARE REQUIRED TO CAREFULLY REVIEW THESE PLANS FOR ERRORS AND OMISSIONS AND TO BRING THESE ERRORS AND OMISSIONS TO THE ATTENTION OF AN APPROPRIATE OWNER REPRESENTATIVE IN A TIMELY MANNER; AND ANY CONTRACTOR WHO FAILS TO DO SO BEFORE BIDDING OR OTHERWISE PROCEEDING ASSUMES THE RISK OF ANY CONSEQUENCES.
6. SCALED DIMENSIONS SHOULD BE CONSIDERED ONLY APPROXIMATE; AND IN ANY EVENT ALL CONTRACTORS PROCEED AT THEIR OWN RISK IF THEY FAIL TO VERIFY AND FIELD MEASURE DIMENSIONS BEFORE PROCEEDING WITH ANY AFFECTED PROCUREMENT, FABRICATION OR CONSTRUCTION.
7. PLANS ARE TO BE CONSIDERED DIAGRAMMATIC IN NATURE AND INTENDED ONLY TO DEMONSTRATE THE RELATIONSHIP AMONG COMPONENT PARTS, AND NOT TO DEPICT SPECIFIC LOCATIONS..
8. CONTRACTOR RFI's ARE INTENDED TO OBTAIN INFORMATION NOT AVAILABLE FROM THE PLANS AND SPECIFICATIONS. RFI's WILL NOT BE PROCESSED THAT CAN BE ANSWERED BY A REVIEW OF THESE DOCUMENTS, THAT REQUEST DIMENSIONS THAT CAN BE OBTAINED FROM THE PLANS BY MATHEMATICAL CALCULATION THAT ARE IN EFFECT A SUBSTITUTION SUBMITTAL, OR THAT SEEK DIRECTION CONCERNING CONSTRUCTION MEANS AND METHODS OR SAFETY PRECAUTIONS. WHERE APPROPRIATE, RFI's SHOULD BE SPECIFIC AS TO WHICH PORTION OF THE PLANS AND SPECIFICATIONS NEEDS CLARIFICATION, AND WHAT INFORMATION IS REQUIRED.
9. NO DEVIATIONS OR OMISSIONS FROM THE REQUIREMENTS OF THE PLANS AND SPECIFICATIONS PROVIDED BY THE PROJECT'S DESIGN TEAM ARE ALLOWED WITHOUT THE EXPRESSED AUTHORIZATION OF AN APPROPRIATE OWNER REPRESENTATIVE, AND THE RESPONSIBLE CONTRACTOR WILL INDEMNIFY AND HOLD HARMLESS THE OWNER AND THE PROJECT DESIGN TEAM FROM AND AGAINST THE CONSEQUENCES OF ANY UNAUTHORIZED DEVIATIONS OR OMISSIONS. SUBSTITUTION SUBMITTALS WILL BE CONSIDERED ONLY IF THE PROPOSED SUBSTITUTION IMPROVES THE QUALITY OF THE PROJECT TO THE OWNER; AND IN NO EVENT WILL THE OWNER BE REQUIRED TO AUTHORIZE A SUBSTITUTION THAT IS NOT EQUAL IN QUALITY TO WHAT IS SPECIFIED.
10. DESIGN/BUILD CONTRACTOR SUBMITTALS WILL BE REVIEWED BY THE PROJECT DESIGN TEAM, IF AT ALL, ONLY FOR CONFORMANCE WITH THE AESTHETIC ASPECTS AND MAJOR SPACE LIMITATIONS OF THE PROJECT; AND EACH DESIGN/BUILD CONTRACTOR IS RESPONSIBLE FOR THE FOLLOWING:
    - A. PREPARING ALL THE ENGINEERING AND OTHER DRAWINGS AND SPECIFICATIONS FOR THE COMPONENTS OF ITS DESIGN/BUILD UNDERTAKING.
    - B. COMPLYING WITH THE PROJECT'S REQUIREMENTS AND SPACE LIMITATIONS.
    - C. COORDINATION AND INTERFACING WITH OTHER TRADES AND CONSULTANTS.
    - D. OBTAINING ANY REQUIRED OR APPROPRIATE APPROVALS FROM AUTHORITIES HAVING JURISDICTION OVER THE PROJECT.
    - E. HAVING THEIR DESIGN CONSULTANTS SERVE AS THE PROFESSIONAL OF RECORD FOR THE PORTIONS OF WORK WHICH THEY DESIGN.
11. AT THE CONCLUSION OF THE CONSTRUCTION, EACH PRIME CONTRACTOR SHALL PROVIDE SUCH WRITTEN CERTIFICATION THAT THE CONSTRUCTION HAS BEEN PERFORMED IN COMPLIANCE WITH THE PROJECT'S APPROVED PLANS AND SPECIFICATIONS AS THE BUILDING OFFICIAL WITH JURISDICTION OVER THE PROJECT MAY REQUIRE, OR AS THE OWNER MAY REASONABLY REQUEST.
12. VERSIONS OF THESE PLANS PROVIDED IN ANY ELECTRONIC FORM ARE SUBJECT TO THE SAME PROVISION AS THE OTHER INSTRUMENTS OF SERVICE PREPARED BY OR ON BEHALF OF THE PROJECT DESIGN TEAM, INCLUDING WITHOUT LIMITATION THEIR COMMON LAW, STATUTORY OR OTHER RESERVED RIGHTS, INCLUDING COPYRIGHTS. A RECIPIENT IS GRANTED AT MOST A TRANSFERABLE NONEXCLUSIVE LICENSE TO REUSE THE PLANS SOLELY FOR PROJECT PURPOSES; AND NO RECIPIENT IS AUTHORIZED TO USE OR TO ALLOW THE USE OF ALL OR ANY PORTION OF THESE PLANS FOR ANY OTHER PURPOSE, AND ANY OTHER USE FOR ANY OTHER PURPOSE COULD CONSTITUTE ACTIONABLE PLAGIARISM. ANY ELECTRONIC DOCUMENTS WILL BE PROVIDED IN THE RESPONSIBLE DESIGN PROFESSIONAL'S STANDARD FORMATS AND CONVENTIONS AND WITH NO GUARANTEE OF THE ABSENCE OF VIRUSES OR OTHER HARMFUL MATERIAL, OR OF COMPATIBILITY WITH ANY RECIPIENT'S SOFTWARE OR HARDWARE SO THAT ANY USE WITH OR CONVERSION TO THE OTHER FORMS OR CONVENTIONS, OR THE USE WITH ANY PARTICULAR SOFTWARE OR HARDWARE, IS AT THE RECIPIENT'S SOLE RISK.

JOB SITE NOTES:

1. WHERE EXISTING TENANTS/BUSINESSES ARE ADJACENT TO THE JOB SITE/TENANT, THE CONTRACTOR SHALL MINIMIZE CONSTRUCTION NOISE – EXTREMELY NOISY CONSTRUCTION SHALL OCCUR AT NON-TYPICAL BUSINESS HOURS. CONTRACTOR SHOULD NOTIFY BUILDING REPRESENTATIVE OF SPECIAL CIRCUMSTANCES IN ADVANCE PRIOR TO WORK.
2. THE CONTRACTOR AT HIS OWN EXPENSE, SHALL KEEP THE PROJECT AND SURROUNDING AREA FREE FROM DUST AND DEBRIS. THE WORK SHALL BE IN CONFORMANCE WITH THE AIR AND WATER POLLUTION CONTROL STANDARDS AND REGULATIONS OF THE STATE DEPARTMENT OF HEALTH.
3. CONSTRUCTION DEBRIS AND WASTES SHALL BE DEPOSITED AT AN APPROPRIATE SITE. THE CONTRACTOR SHALL INFORM THE BUILDING REPRESENTATIVE OF THE LOCATION OF DISPOSAL SITES.
4. CONTRACTOR SHALL BE RESPONSIBLE FOR THE GENERAL CLEANING OF THE JOB AFTER ITS COMPLETION. WHERE APPLICABLE, CLEANING SHALL INCLUDE, BUT NOT BE LIMITED TO, THE EXTERIOR AND THE INTERIOR OF THE BUILDING, THE PATH OF TRAVEL TO THE JOB SITE, PARKING LOTS, ELEVATORS, LOBBIES, AND CORRIDOR CARPETS.
5. THE CONTRACTOR SHALL PROVIDE PEDESTRIAN PROTECTION, WHERE REQUIRED PER STATE AND LOCAL CODES.
6. IF TRENCHES OR EXCAVATIONS 5'-0" OR MORE IN DEPTH ARE REQUIRED, OBTAIN ISSUANCE OF A BUILDING OR GRADING PERMIT.
7. NO HAZARDOUS MATERIALS SHALL BE USED OR STORED WITHIN THE BUILDING WHICH DOES NOT COMPLY WITH THE LOCAL FIRE AUTHORITY AND STATE & COUNTY REQUIREMENTS.
8. CONTRACTOR SHALL BE RESPONSIBLE FOR BLOCKING OFF SUPPLY AND RETURN AIR GRILLES, DIFFUSERS & DUCTS TO KEEP DUST FROM ENTERING INTO BUILDING AIR DISTRIBUTION SYSTEMS.
9. THE CONTRACTOR SHALL TAKE ALL NECESSARY PRECAUTIONS TO ENSURE THE SAFETY OF THE OCCUPANTS AND WORKERS AT ALL TIMES.
10. THE CONTRACTOR SHALL BE RESPONSIBLE FOR THE COMPLETE SECURITY OF THE BUILDING AND SITE WHILE JOB IS IN PROGRESS AND UNTIL THE JOB IS COMPLETED.

DRAWING NOTES:

1. UNLESS OTHERWISE NOTED OR INDICATED, ALL DIMENSIONS ON THESE DOCUMENTS SHALL BE TO FACE OF CURB, FACE OF CONCRETE OR MASONRY, FACE OF FINISH OR CENTERLINE OF GRIDS.
2. ALL VERTICAL DIMENSIONS SHOWN ARE FROM FLOOR SLAB, U.O.N.
3. DIMENSIONS SHOWN IN FIGURES TAKE PRECEDENCE OVER DIMENSIONS SCALED FROM DRAWINGS. LARGE SCALE DRAWINGS AND DETAILS TAKE PRECEDENCE OVER SMALLER SCALE DRAWINGS.
4. THE TERM "ALIGN", AS USED IN THESE DOCUMENTS, SHALL MEAN TO ACCURATELY LOCATE FINISHES IN THE SAME PLANE.
5. "TYPICAL" AS USED IN THESE DOCUMENTS SHALL MEAN THAT THE CONDITION IS THE SAME OR REPRESENTATIVE FOR ALL SIMILAR CONDITIONS THROUGHOUT, U.O.N.
6. DETAILS ARE USUALLY KEYED AND NOTED "TYPICAL" ONLY ONCE, WHEN THEY FIRST OCCUR AND ARE REPRESENTATIVE OF ALL SIMILAR CONDITIONS THROUGHOUT, U.O.N.
7. COLUMN CENTERLINES (GRID LINES) ARE SHOWN FOR DIMENSIONING PURPOSES.
8. WHERE CONSTRUCTION DETAILS ARE NOT SHOWN OR NOTED FOR ANY PART OF THE WORK, THE DETAILS SHALL BE THE SAME AS FOR OTHER SIMILAR WORK IN THE SAME BUILDING.

INTERIOR / EXTERIOR NOTES:

1. WHERE ELECTRICAL, MECHANICAL AND/OR PLUMBING ITEMS, SUCH AS LIGHTS, DUCTS, PIPING, DOWNSPOUTS, ETC. ARE TO PENETRATE ANY BUILDING FOOTINGS, SLABS, FLOORS, STRUCTURAL FRAMING, WALL PARTITIONS, CEILINGS, ETC., IT IS REQUIRED THAT AN APPROPRIATELY SIZED OPENING OR CLEARANCE BE FURNISHED. CONTRACTOR SHALL COORDINATE THE INSTALLATION OF ALL ITEMS WITH THE CONSTRUCTION DOCUMENTS PRIOR TO THE INSTALLATION OF STRUCTURAL, MECHANICAL, PLUMBING AND ELECTRICAL WORK. ANY CONFLICT OR DISCREPANCY WITHIN CONSTRUCTION DOCUMENTS SHALL BE BROUGHT TO THE ARCHITECT'S ATTENTION FOR CLARIFICATION.
2. CONTRACTOR, ALONG WITH MECHANICAL CONTRACTOR, SHALL PROVIDE AND LOCATE ACCESS DOORS/PANELS IN WALL & CEILING CONSTRUCTION AS REQUIRED TO PROVIDE ACCESS TO MECHANICAL, FIRE SPRINKLER, PLUMBING & ELECTRICAL WORK. CONTRACTOR SHALL SUBMIT A PLAN OF ALL PROPOSED ACCESS PANEL LOCATIONS TO ARCHITECT FOR APPROVAL PRIOR TO INSTALLATION.
3. ALL PENETRATIONS AT RATED CONSTRUCTION SHALL BE PROTECTED TO MAINTAIN RATING.
4. WHERE OCCURS, CONTRACTOR SHALL PATCH ANY EXISTING WALLS AND/OR CEILINGS AS NEEDED TO REFURBISH THE LEASE SPACE AND REPAIR ALL DAMAGES CAUSED BY CONTRACTOR.
5. INTERIOR WALLS AND CEILINGS SHALL BE INSTALLED IN ACCORDANCE TO STATE & LOCAL CODES, INCLUDING REQUIREMENTS FOR FLAME SPREAD AND SMOKE DENSITY RATINGS FOR FINISH MATERIALS.
6. WHEN USED, ALL NOISE BARRIER BATTS (SOUND INSULATION) AND INSULATION BATTS SHALL BE NON-COMBUSTIBLE AND SHALL NOT CONTAIN OR UTILIZE OZONE DEPLETING COMPOUNDS.
7. ALL NEW CONSTRUCTION MATERIALS SHALL BE 100% ASBESTOS-FREE.

PROJECT DATA

BUILDING DEPARTMENT:	CITY OF AURORA, COLORADO
BUILDING CODES:	2015 INTERNATIONAL BUILDING CODE 2014 NATIONAL ELECTRIC CODE 2015 INTERNATIONAL MECHANICAL CODES 2015 INTERNATIONAL PLUMBING CODE 2015 INTERNATIONAL FIRE CODE
OCCUPANCY CLASSIFICATION:	PER IBC CHAPTER 3 (SECTION 302) – B
TYPE OF CONSTRUCTION:	PER IBC CHAPTER 6 (SECTION 602) – ~~V – B~~ IIB-SPK.
SPRINKLERED:	YES
NUMBER OF STORIES:	3
PROJECT SCOPE:	THE SCOPE OF THIS PROJECT IS 2ND GENERATION "WHITE BOX" IMPROVEMENT
TENANT OCCUPANCY:	OFFICE (B) 13,975 S.F. TOTAL 13,975 S.F.

City of Aurora Building Division
Project: *Landlord Improvement*
Address: *1444 S. Potomac St.*
Occupancy Group: *B*
Construction Type: *IIB-SPK.*
RSN: *1166695*
Permit: *16-1212380 LT*

NO CERTIFICATE OF OCCUPANCY ON THIS PERMIT

Code violations that are found during inspection are required to be corrected. Permit issuance does not grant approval of a code violation.

Field Inspection consultation is available upon request. Call 303-739-7420 to request a consultation

City of Aurora Building Division
Reviewed for Code Compliance
Approved as Noted: *pmckown*
Date: *Dec 06, 2016*
2015 INTERNATIONAL CODES & 2014 NEC

SHEET INDEX

ARCHITECTURAL

A0.1	TITLE SHEET
A0.2	GENERAL NOTES
A0.3	ACCESSIBILITY NOTES & DETAILS
A1.1	OCCUPANCY & EGRESS PLAN
AD.1	DEMOLITION PLAN
AD.1	DEMOLITION PLAN
A2.1	FLOOR AND FINISH PLAN
A3.1	REFLECTED CEILING PLAN
A4.1	DETAILS

ELECTRICAL

E0.0	TITLE SHEET
E1.0	ELECTRICAL DEMOLITION PLAN
E2.0	ELECTRICAL FLOOR PLAN

MECHANICAL

M0.0	TITLE SHEET
M1.0	MECHANICAL FLOORPLAN

PLUMBING

P0.0	TITLE SHEET
P1.0	PLUMBING FLOORPLAN

VICINITY MAP

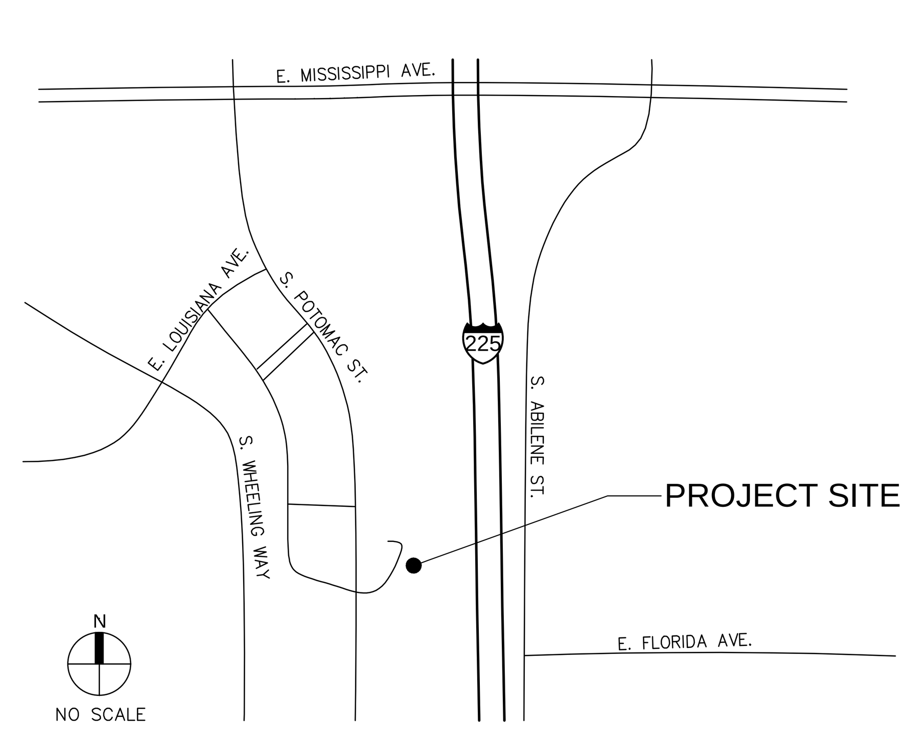

PROPERTY MANAGER

CBRE

8390 E. CRESCENT PARKWAY, SUITE 300
GREENWOOD VILLAGE, COLORADO 80111

LILA WALKER
PH: (720) 528-6392
FAX: (303) 550-8319

ARCHITECT

WARE MALCOMB

1600 CHAMPA ST. SUITE 350
DENVER, CO 80202

ANNIE HUFF
PH: (303) 689-1536
EMAIL: AHUFF@WAREMALCOMB.COM

CONSULTANTS

ELECTRICAL ENGINEER
MV CONSULTING INC.
2828 N. SPEER BLVD. SUITE 210
DENVER, COLORADO 80211
NICK GOULET
PH: (303) 325-3271

MECHANICAL/PLUMBING ENGINEER
MOEN ENGINEERING
2828 N. SPEER BLVD. SUITE 210
DENVER, COLORADO 80211
BRYAN MOEN
PH: (303) 907-4285

THESE DRAWINGS AND SPECIFICATIONS ARE THE PROPERTY AND COPYRIGHT OF WARE MALCOMB AND SHALL NOT BE USED ON ANY OTHER WORK EXCEPT BY AGREEMENT WITH WARE MALCOMB. WRITTEN DIMENSIONS SHALL TAKE PRECEDENCE OVER SCALED DIMENSIONS AND SHALL BE VERIFIED ON THE JOB SITE. ANY DISCREPANCY SHALL BE BROUGHT TO THE NOTICE OF WARE MALCOMB PRIOR TO THE COMMENCEMENT OF ANY WORK.

WARE MALCOMB
Leading Design for Commercial Real Estate

architecture
planning
interiors
graphics
civil engineering

1600 champa st.
suite 350
denver, colorado 80202
p 720.488.2626

STATE OF COLORADO
MATTHEW NATHAN CHAIKEN
306199
LICENSED ARCHITECT
NOV 14 2016

2ND FLOOR WHITE BOX
1444 SOUTH POTOMAC
AURORA, COLORADO

TITLE SHEET

DATE	REMARKS
11.14.16	BLDG. DEPT SUBMITTAL

PA / PM:	A. HUFF
DRAWN BY:	AKN
JOB NO.:	DEN16-6168-00

SHEET
A0.1

Mon, 14 Nov 2016

W:\DEN\16\6168\00\Architectural\Cad\CD\6168_A01.dwg

CAUTION: IF THIS SHEET IS NOT 30"x42" IT IS A REDUCED PRINT

DEMOLITION NOTES

1. DRAWINGS OF EXISTING CONDITIONS HAVE BEEN COMPILED FROM EXISTING DATA SUPPLIED BY THE OWNER TO THE ARCHITECT. THE ARCHITECT MAKES NO WARRANTY, EITHER EXPRESS OR IMPLIED, FOR THE ACCURACY OF THE COMPLETENESS OF THE EXISTING INFORMATION RECORDED. THE CONTRACTOR SHALL FIELD VERIFY ALL EXISTING CONDITIONS AND NOTIFY THE ARCHITECT IMMEDIATELY OF ANY DISCREPANCIES OR CONFLICTS THAT MIGHT ARISE IN THE COURSE OF THE DEMOLITION WORK.
2. VERIFY LOCATIONS OF EXISTING MECHANICAL, PLUMBING AND ELECTRICAL UTILITIES. LOCATE AND PROTECT UTILITIES TO REMAIN. DISCONNECT, REMOVE BACK TO NEAREST JUNCTION BOX OR PANEL, AS REQUIRED, AND CAP DESIGNATED UTILITIES WITHIN THE DEMOLITION AREA. REFER TO THE MECHANICAL, PLUMBING AND ELECTRICAL DRAWINGS FOR ADDITIONAL INFO.
3. EXISTING ELECTRICAL AND TELEPHONE OUTLETS LOCATED ON DEMOLISHED WALLS ARE TO BE REMOVED INCLUDING CONDUIT AND WIRING BACK TO JUNCTION BOX. LOCATIONS ARE TO BE PATCHED AND REPAIRED TO BE FLUSH WITH ADJACENT WALL SURFACE.
4. WHERE PLUMBING FIXTURES ARE BEING REMOVED OR WHERE EXPOSED PLUMBING PIPES OCCUR, CAP LINES BEHIND FINISHED SURFACES. PATCH AND REPAIR AS REQUIRED.
5. ALL EXISTING CONSTRUCTION WHERE INDICATED INCLUDING ELECTRICAL, TELEPHONE, PLUMBING AND MECHANICAL DEVICES NOT OTHERWISE INDICATED ON THESE CONSTRUCTION DRAWINGS SHALL BE REMOVED IN A CAREFUL MANNER SO AS NOT TO DAMAGE ADJOINING CONSTRUCTION.
6. IT SHALL BE THE RESPONSIBILITY OF THE CONTRACTOR TO LOCATE ALL EXISTING UTILITIES WHETHER SHOWN HEREON OR NOT AND TO PROTECT THEM FROM DAMAGE. THE CONTRACTOR SHALL BEAR ALL EXPENSE OF REPAIR OR REPLACEMENT OF UTILITIES OR OTHER PROPERTY DAMAGED BY OPERATIONS IN CONJUNCTION WITH THE EXECUTION OF HIS WORK.
7. ALL EXISTING BUILDING UTILITIES SHALL REMAIN IN OPERATION DURING CONSTRUCTION. PROVIDE REROUTING OF UTILITIES SERVING ADJACENT AREAS THAT ARE TO MAINTAIN UNINTERRUPTED SERVICE. ANY TEMPORARY SUSPENSION OF SERVICE SHALL BE COORDINATED AND APPROVED BY THE FACILITY MANAGER, NOT LESS THAN 24-HOURS IN ADVANCE.
8. THE CONTRACTOR WILL VERIFY AND CONFORM TO ALL REQUIREMENTS OF ALL UTILITY COMPANIES UNLESS OTHERWISE NOTED IN THE PLANS AND SPECIFICATIONS.
9. THE DEMOLITION PLAN KEYNOTES ARE DIAGRAMMATIC AND GENERAL IN NATURE. THE INTENT IS TO ILLUSTRATE THE COMPLETE DEMOLITION OF THE SPACES INDICATED UNLESS NOTED OTHERWISE. FIELD VERIFICATION OF EXISTING CONDITIONS AND SPECIFIC QUANTITIES IS THE RESPONSIBILITY OF THE CONTRACTOR.
10. REMOVAL AND DISPOSAL OF DEMOLITION DEBRIS IS THE RESPONSIBILITY OF THE CONTRACTOR. VERIFY THE HAULING ROUTE THROUGH THE BUILDING, THE DEMOLITION STAGING AREA, AND THE LOCATION OF THE DUMPSTERS WITH THE OWNER PRIOR TO THE START OF DEMOLITION. DISPOSAL OF RUBBISH SHALL BE DONE IN A LEGAL MANNER.
11. THE OWNER RESERVES THE RIGHT TO SALVAGE ANY DEMOLISHED ITEM. VERIFY ITEMS TO BE SALVAGED WITH THE OWNER PRIOR TO THE START OF DEMOLITION. REMOVE, PROTECT, CLEAN, REPAIR FOR REUSE AND TURN OVER SUCH ITEMS AS DIRECTED BY THE OWNER.
12. IN ORDER TO INSTALL SOME OF THE NEW WORK (INCLUDING, BUT NOT LIMITED TO MECHANICAL, PLUMBING OR ELECTRICAL) IT WILL BE NECESSARY FOR THE CONTRACTOR AND HIS SUBCONTRACTORS TO REMOVE AND REPLACE (OR REFINISH) EXISTING WALLS, FLOORS, OR CEILING IN THE AREAS OF THE BUILDING NOT SHOWN ON THESE PLANS. THE CONTRACTOR SHALL INCLUDE ALL RELATED COSTS IN HIS BASE BID, WHETHER SHOWN ON THESE PLANS OR NOT.
13. PROTECT ADJACENT SPACES NOT SCHEDULED FOR DEMOLITION. PATCH AND REPAIR DAMAGED FINISHES, ITEMS AND FIXTURES TO REMAIN AND/OR REPLACE IN KIND TO MATCH EXISTING FROM DAMAGE DURING THE PROGRESS OF THE WORK. PROVIDE TEMPORARY SAFETY BARRIERS REQUIRED BY CODE AND AS INDICATED TO INSURE PUBLIC SAFETY AND TO ALLOW BUILDING OCCUPANCY. CONTRACTOR TO SUBMIT FOR APPROVAL, BARRIER LOCATIONS, AND METHOD OF CONSTRUCTION TO THE ARCHITECT PRIOR TO INSTALLATION.
14. NO STRUCTURAL ELEMENTS ARE INCLUDED IN THIS SCOPE OF WORK.
15. PROVIDE DUST BARRIERS AROUND OPENINGS, TO AND FROM THE CONSTRUCTION AREA. PROVIDE ALL MEANS NECESSARY TO INHIBIT DUST FROM ENTERING OTHER PORTIONS OF THE FACILITY. SUBMIT BARRIER LOCATIONS TO THE ARCHITECT FOR APPROVAL, PRIOR TO INSTALLATION.
16. PROVIDE ADEQUATE SHORING, BRACING, BARRICADES AND PROTECTIVE MEASURES AS REQUIRED TO SAFELY EXECUTE THE WORK IN THE CONSTRUCTION AREA AND THE AREAS ADJACENT TO THE CONSTRUCTION AREA. CEASE OPERATIONS AND NOTIFY THE ARCHITECT IMMEDIATELY IF THE STRUCTURE APPEARS TO BE ENDANGERED. DO NOT RESUME OPERATIONS UNTIL CORRECTIVE MEASURES HAVE BEEN TAKEN.
17. CONTRACTOR SHALL MAINTAIN REQUIRED MEANS OF EGRESS AND ENSURE THAT EXIT ROUTES ARE SIGNED, LIGHTED AND PROTECTED IN ACCORDANCE WITH CODE REQUIREMENTS. RELOCATE EXISTING AND/OR PROVIDE SMOKE PROTECTORS AND LIFE SAFETY EQUIPMENT FOR ADEQUATE COVERAGE.
18. PROVIDE TEMPORARY NON-COMBUSTIBLE CONSTRUCTION BARRIERS WHERE REQUIRED BY CODE AND THE GOVERNING FIRE AUTHORITY. MINIMUM REQUIREMENTS:
    A. FULL HEIGHT WALL FROM FLOOR TO CEILING.
    B. STUDS AT 24" O.C., WITH 5/8" TYPE 'X' GYPSUM BOARD.
    C. NON-COMBUSTIBLE ACCESS DOOR WITH (3) HINGES AND SPRING CLOSER.
19. SURVEY EXISTING FLOORS AND CLEARLY MARK ON FLOOR SURFACE THE LOCATIONS OF ALL BEAMS AND JOISTS. MARK ALL CORE DRILL PENETRATIONS AND RECEIVE STRUCTURAL ENGINEER'S APPROVAL PRIOR TO DRILLING CONCRETE.
20. CUT RIGID MATERIALS USING MASONRY SAW OR CORE DRILL. PNEUMATIC TOOLS ARE NOT ALLOWED WITHOUT PRIOR APPROVAL.
21. ALL CORE DRILLING OR OTHER NOISY WORK SHALL BE SCHEDULED 48-HOURS IN ADVANCE WITH THE OWNER.
22. APPLY CEMENT BASE FLOOR PATCH AS REQUIRED TO FILL DINGS, NAIL HOLES, CHIPS AND CRACKS.
23. AT FLOOR AREAS SCHEDULED TO RECEIVE NEW FLOOR COVERING, REMOVE EXISTING FLOOR COVERING AND PREPARE SUBSTRATE FOR NEW FLOOR COVERING PER SPECIFICATIONS AND MANUFACTURER'S REQUIREMENTS.
24. AT ABANDONED PENETRATIONS OF FIRE RATED WALLS, CEILING OR FLOOR CONSTRUCTION, COMPLETELY SEAL VOIDS WITH FIRE RATED MATERIAL TO FULL THICKNESS OF THE PENETRATED ELEMENT. ALL PATCHING OF EXISTING WORK TO REMAIN SHALL MATCH FINISH PER SCHEDULE OR WHERE UNSCHEDULED TO MATCH EXISTING FINISHES TO REMAIN, AND SHALL MEET OR EXCEED FIRE RATING INDICATED ON FLOOR PLAN AND AS REQUIRED BY THE FIRE/LIFE SAFETY INSPECTOR.
25. COORDINATE EXISTING SPRINKLER LINE AND HEAD LOCATION WITH NEW PLAN. SUBMIT SPRINKLER SHOP DRAWINGS TO ARCHITECT FOR REVIEW WITH THE CITY FIRE DEPARTMENT.
26. CONTRACTOR IS RESPONSIBLE FOR BUILDING SECURITY DURING DEMOLITION PHASE. PROTECT ALL OPENINGS FROM WEATHER CONDITIONS AND SECURE THEM TO PREVENT VANDALISM.
27. DO NOT PERFORM ANY WORK THAT WILL VOID WARRANTIES OF EXISTING WEATHER EXPOSED OR MOISTURE RESISTANT ELEMENTS WITHOUT PRIOR APPROVAL FROM THE OWNER.
28. ARCHITECT ASSUMES NO RESPONSIBILITY RELATING TO ANY TOXIC MATERIALS, INCLUDING ASBESTOS, AND ASSUMES NO RESPONSIBILITY TO ITS EXISTENCE OR REMOVAL. THE OWNER WILL TAKE ACTION FOR DIRECTLY CONTRACTING WITH A CONSULTANT OR SPECIALIST, LICENSED BY THE STATE, FOR SUCH SERVICES SHOULD THOSE SERVICES BE REQUIRED ON THE PROJECT.
29. IF THE EXISTING BUILDING CONSTRUCTION IS CLASSIFIED SUCH THAT FIREPROOFING INSULATION IS PRESENT, THEN THE CONTRACTOR, PRIOR TO STARTING ANY WORK, SHALL VERIFY THE CURRENT FIRE-RESISTANCE RATING(S) OF THE EXISTING BUILDING ELEMENT(S). IF THE EXISTING FIREPROOFING INSULATION IS DAMAGED/AFFECTED DURING THE COURSE OF THE WORK, AS DEFINED BY THIS PROJECT SCOPE, THEN THE CONTRACTOR SHALL PATCH/REPAIR THE FIREPROOFING INSULATION TO A CONDITION THAT SHALL MATCH OR EXCEED THE ORIGINAL FIRE-RESISTANCE RATING(S) OF THE EXISTING BUILDING ELEMENT(S).
30. CONTRACTOR TO RELOCATE AND REUSE EXISTING DOORS AND HARDWARE WHERE POSSIBLE.
31. EXISTING DOORS TO REMAIN U.O.N.

FINISH NOTES

1. NO FINISH SUBSTITUTIONS MAY BE MADE UNLESS APPROVED BY ARCHITECT.
2. CONTRACTOR MUST NOTIFY THE ARCHITECT OF ANY DISCREPANCY IN PLANS. FINISH ITEMS CLEARLY SHOWN IN PLANS, BUT OMITTED FROM SCHEDULES OR LEGENDS MUST STILL BE PROVIDED AND INSTALLED BY CONTRACTOR. CONTRACTOR TO VERIFY OMITTED FINISHED WITH ARCHITECT PRIOR TO ORDERING PRODUCTS.
3. INSTALL MATERIALS ACCORDING TO MANUFACTURER'S SUGGESTED INSTALLATION AND PREPARATION/MAINTENANCE SPECIFICATIONS OR BETTER, UNLESS OTHERWISE APPROVED OR NOTED.
4. APPLICATION OF CONTROLLED INTERIOR FINISHES SHALL BE IN CONFORMANCE WITH STATE & LOCAL CODES.
5. DECORATIVE MATERIALS SHALL BE MAINTAINED IN A FLAME-RETARDANT CONDITION.
6. SUBMIT THE FOLLOWING SAMPLES FOR ARCHITECT'S APPROVAL:
    A. THREE (3) 12" X 12" SAMPLES FOR ALL PAINT AND STAIN BRUSHOUTS, VINYL AND FABRIC FINISHES AND COLORS APPLIED TO A SUBSTRATE WHICH IS REPRESENTATIVE OF THE SURFACE TO BE FINISHED. SUBMIT PAINT SAMPLES FROM THE PAINT LOT OR LOTS INTENDED FOR APPLICATION.
    B. ONE (1) 24" X 24" MOCK-UP WITH SAMPLE SEAM (CENTERED) OF ALL FABRIC AND VINYL FINISHES AND COLOR.
    C. THREE (3) 12" X 12" SAMPLES OF ALL FLOOR COVERING.
    D. SUBMIT ACTUAL CUTTINGS OF EACH PRODUCT FOR COLOR/QUALITY CONTROL.
6. WHERE MATERIALS ARE NOT RETURNABLE, SUBMIT SAMPLES TO ARCHITECT BEFORE PLACING FULL ORDERS.
7. SUBMIT SEAMING PLAN FOR ALL FLOOR FINISHES TO ARCHITECT FOR APPROVAL PRIOR TO ORDER.
8. NOTIFY ARCHITECT IMMEDIATELY OF ITEMS WITH LONG LEAD TIMES.
9. ALL PAINT FINISH OF METAL PARTS OF DOORS, HANDRAILS, PERIMETER ENCLOSURES, ETC., SHALL BE SEMI-GLOSS, U.O.N.
10. WHERE PAINT COLORS CHANGE, CORNERS ARE TO BE CUT-IN FREE OF OVERLAPPING.
11. PRIOR TO THE INSTALLATION OF WALL COVERINGS, SURFACES SHALL BE PROPERLY PREPARED WITH SEALER PER MANUFACTURER'S RECOMMENDATIONS.
12. CONTRACTOR TO VERIFY CONDITION AND LEVEL OF FLOOR SO AS TO RECEIVE NEW FINISHES WITHOUT BOWING AT FLOOR OR WALL BASE. CONTRACTOR IS RESPONSIBLE FOR ALL FLOOR PREPARATION.
13. ALL CARPETING SHALL BE INSTALLED WITH GLUE DOWN METHOD, U.O.N.
14. WHERE FLOOR-MOUNTED OUTLETS ARE REQUIRED ON CARPETED AREA, CUT CARPET IN AN "X" OVER FLOOR HOLE AND INSTALL CARPET OVER TOP. DO NOT TRIM CARPET.
15. ALL V.C.T. TO BE INSTALLED WITH FULL TILE FROM VINYL THRESHOLD STRIP AND FULL TILE FROM WALL ADJACENT TO DOOR SWING, U.O.N.
16. PROVIDE AND INSTALL SPECIFIED BASE FOR ALL AREAS TO RECEIVE FLOORING.
17. CONTRACTOR SHALL PROVIDE PRE-FORMED RUBBER BASE CORNERS. DO NOT CUT OR BEND STRAIGHT BASE TO MAKE CORNERS.
18. MILLWORK LOWER CABINETS ARE NOT TO RECEIVE WALL BASE UNLESS INDICATED ON FINISH PLANS.
19. FLOOR FINISHES TO CONTINUE UNDERNEATH "OPEN FLOOR" AREAS OF MILLWORK, INCLUDING SINK AREA AND AT ALL UNDER-COUNTER EQUIPMENT AREAS WHICH ARE OPEN TO THE FLOOR.
20. FLOORS SHALL BE SLOPED TO FLOOR DRAINS. COORDINATE WITH PLUMBING AND STRUCTURAL DRAWINGS. IN RATED FLOOR CONDITIONS, CONFIRM REMAINING FLOOR THICKNESS STILL CONFORMS TO MINIMUM RATING REQUIREMENT.
21. CONTRACTOR TO RUN CALCIUM CHLORIDE TEST ON ALL EXISTING OR NEW CONCRETE SLABS PRIOR TO INSTALLING ANY FLOORING AND COMPARE RESULTS WITH FLOORING MANUFACTURE'S RECOMMENDED MAXIMUM CONTENT FOR WARRANTIES AND ADHESIVE PRODUCTS.
22. PRIOR TO NEW FLOORING INSTALLATION REMOVE EXISTING FLOOR FINISHES. PATCH AND REPAIR SUB-FLOOR AS REQUIRED. PREPARE FLOORS AND TRANSITIONS AS REQUIRED FOR SMOOTH AND LEVEL FINISH PER APPLICABLE BUILDING CODES.
23. ALL FLOORING TRANSITIONS AMONG ALL THE DIFFERING FLOORING MATERIAL SPECIFICATION TYPES ARE TO BE A FLUSH TRANSITION.
24. FEATHER SUB-FLOOR UP FOR A) TILE FLOORING TO CARPET AND B) VINYL FLOORING TO CARPET, FOR FLUSH INSTALLATION.
25. INSTALL METAL TRANSITION STRIPS WHERE TILE MEETS ALL OTHER FLOORING TYPES. PROVIDE LOW PROFILE TRANSITION STRIP WHERE ALL OTHER DIFFERENT FLOOR TYPES MEET, VERIFY COLOR.
26. CONTRACTOR TO HEAT/CHEMICAL SEAM VINYL FLOORING AS PER MANUFACTURER'S SPECIFICATIONS AND SEAL ALL VINYL FLOORS PER MANUFACTURER'S MAINTENANCE SPECIFICATIONS.
27. FLOOR COVERING INSTALLER TO FOLLOW MANUFACTURER'S SPECIFIED CARPET INSTALLATION INSTRUCTIONS. USING ADHESIVES AND INSTALLATION METHODS REQUIRED INSTRUCTIONS TO MAINTAIN PRODUCT'S WARRANTY. CONTACT CARPET SALES REPRESENTATIVE WITH QUESTIONS PRIOR TO PROCEEDING.
28. FLOOR COVERING INSTALLER TO FOLLOW MANUFACTURER'S SPECIFIED CONTOURED RUBBER BASE INSTALLATION INSTRUCTIONS USING ADHESIVES AND INSTALLATION METHODS REQUIRED TO MAINTAIN PRODUCT'S WARRANTY.
29. FLOOR COVERING INSTALLER REQUIRED TO PROVIDE MINIMAL SEAMS/JOINTS AT ALL LOCATIONS FOR FLOOR AND WALL BASE MATERIAL INSTALLATION. PROVIDE LOW VOC, BUT HEAVY DUTY ADHESIVES TO ENDURE HEAVY FOOT TRAFFIC, CARTS AND TO MAINTAIN PRODUCT'S WARRANTY.
30. PRIOR TO PAINTING, WALLS MUST BE PATCHED AND REPAIRED, CLEAN AND DRY AND PROPERLY MEMBERED AND ALIGNED SO, AS TO LEAVE NO EVIDENCE OF PATCHING OR REPAIRS. ALL SCREW AND NAIL HEADS MUST BE SET AND SPACKLED. ALL JOINTS MUST BE TAPED AND COVERED WITH JOINT COMPOUND. JOINTS THAT ARE FILLED TO BE SANDED SMOOTH AND DUST REMOVED PRIOR TO RECEIVING NEW PAINT FINISH APPLICATION.
31. PRIOR TO PAINTING OVER WALL COVERING, SECURELY GLUE DOWN ANY LIFTING OR BUCKLING AND HIDE ALL SEAMING OR BUMPS.
32. WALLS TO HAVE AT LEAST ONE COAT OF COLORED PRIMER AND TWO COATS OF SPECIFIED PAINT FINISH TYPE. PAINT TO BE A LOW VOC UNLESS U.O.N. HIGH TRAFFIC/WEAR ABILITY WITH GOOD SCRUB AND CLEANING ABILITY. VERIFY ALL WITH TENANT OR OWNER PRIOR TO PURCHASING PAINT.
33. PAINT ALL SPEAKER COVERS AND HVAC GRILLS IN GYPSUM BOARD WALLS AND CEILINGS TO MATCH ADJACENT PAINT COLOR AS SPECIFIED.
34. PRIOR TO INSTALLING WALL TILES AND WALL BASE TILE, WALLS MUST BE PATCHED AND REPAIRED, CLEAN AND DRY AND BE PROPERLY MEMBERED AND ALIGNED, SO, AS TO LEAVE NO EVIDENCE OF PATCHING OR REPAIRS. ALL SCREW AND NAIL HEADS MUST BE SET AND SPACKLED. ALL JOINTS MUST BE TAPED AND COVERED WITH JOINT COMPOUND. JOINTS THAT ARE FILLED ARE TO BE SANDED SMOOTH AND BUMP FREE WITH DUST REMOVED PRIOR TO RECEIVING MORTAR BED/BOND COAT AND WALL TILES.
35. ALL WALL TILES ARE TO HAVE A MORTAR BED/BOND COAT THICKNESS TO ACCOMMODATE THE VARYING THICKNESSES OF ALL MATERIAL TYPES OF TILE SPECIFIED FOR WALL INSTALLATION WITH A FLUSH FRONT FACE.
36. ALL TRANSLUCENT GLASS TILE SPECIFIED ARE TO RECEIVE UNIFORM COVERAGE BY BACK BUTTERING TILES AND TROWEL RIDGES FLATTENED PRIOR TO SETTING TRANSLUCENT GLASS TILES.
37. FLOORS OF TOILETS, BATHING AND SHOWER ROOMS SHALL HAVE A SMOOTH, HARD, NONABSORBENT SURFACE. THE INTERSECTION OF SUCH FLOORS WITH WALLS SHALL HAVE A SMOOTH, HARD, NONABSORBENT VERTICAL BASE AS SPECIFIED IN FINISH PLANS OR RESTROOM ELEVATIONS. BASE SHALL EXTEND UPWARD ONTO THE WALLS NOT LESS THAN 4 INCHES.
38. WALLS AND PARTITIONS WITHIN 2 FEET OF SERVICE SINKS, URINALS AND WATER CLOSETS SHALL HAVE A SMOOTH, HARD, NONABSORBENT SURFACE TO A HEIGHT OF NOT LESS THAN 4 FEET ABOVE THE FLOOR.
39. CONTROL JOINTS AT GYPSUM BOARD ASSEMBLIES: THE MAXIMUM RECOMMENDED CONTROL JOINT SPACING FOR WALLS AND CEILINGS WITHOUT PERIMETER RELIEF IS 30 LINEAR FEET OR 900 SQUARE FEET OF SURFACE AREA, WITH PERIMETER RELIEF IS 50 LINEAR FEET OR 2,500 SQUARE FEET OF SURFACE AREA. EXTERIOR JOINT SPACING IS RECOMMENDED AT 30 LINEAR FEET OR 900 SQUARE FEET OF SURFACE AREA.
40. CONSTRUCTION JOINTS (EXPANSION JOINTS) AT GYPSUM BOARD ASSEMBLIES: CONSTRUCTION JOINTS ARE REQUIRED AT CONTINUOUS GYPSUM BOARD SURFACES WITH DISSIMILAR WALL STRUCTURE.

CEILING NOTES

1. SEE ELECTRICAL ENGINEERING DRAWINGS FOR SPECIFICATIONS OF NEW BUILDING STANDARD LIGHT FIXTURES, SWITCHES, EXIT SIGNS, ETC.
2. ALL REPLACEMENT FLUORESCENT LAMPS TO MATCH BUILDING STANDARD – SAME COLOR AND MANUFACTURER.
3. FIELD VERIFY EXISTING CEILING GRID LOCATION AND NOTIFY ARCHITECT OF ANY DISCREPANCIES ON PLANS.
4. WHERE DISCREPANCIES IN LOCATION OF LIGHT FIXTURES, AIR DIFFUSERS, GRILLES, ETC. OCCUR ON THE ELECTRICAL ENGINEERING PLANS, THE ARCHITECTURAL PLANS SHALL GOVERN. NOTIFY ARCHITECT OF ANY DISCREPANCIES FOR CLARIFICATIONS.
5. FIELD VERIFY ALL CLEARANCES OF DUCTS, PIPES, SPRINKLERS, ETC., AND NOTIFY ARCHITECT OF ANY CONFLICTS PRIOR TO INSTALLATION OF LIGHTS, ETC.
6. PLACEMENT OF LIGHT FIXTURES IN AREAS WHERE MAIN DUCTS MAY CAUSE INTERFERENCE MUST BE APPROVED BY ARCHITECT PRIOR TO INSTALLATION.
7. CONDUITS ABOVE CEILING MUST BE A MINIMUM OF 12" ABOVE THE CEILING GRID.
8. NO COMBUSTIBLE MATERIALS SHALL BE USED IN THE PLENUM SPACE, INCLUDING ALUMINUM FLEX, ALUMINUM CONDUIT, AND POT METAL CONNECTORS.
9. ALL JUNCTION BOXES AND MECHANICAL EQUIPMENT REQUIRING ACCESS FOR SERVICE SHALL BE LOCATED OVER ACOUSTICAL CEILINGS. NO ACCESS HATCHES SHALL BE INSTALLED IN GYPSUM BOARD CEILINGS WITHOUT PRIOR APPROVAL BY ARCHITECT. (NO EXCEPTION)
10. ALL SPRINKLER HEADS AT HARD-LID CEILINGS ARE TO BE FULLY RECESSED AND CONCEALED. HEADS ARE TO BE CENTERED BETWEEN LIGHTS IN A UNIFORM ARCHITECTURAL PATTERN. G.C. TO PROVIDE A SUBMITTAL WITH SPRINKLER HEAD LOCATIONS FOR ARCHITECT'S APPROVAL PRIOR TO INSTALLATION.
11. ALL GYPSUM BOARD CEILINGS ARE TO BE INSTALLED WITH LINEAR DIFFUSERS. G.C. TO PROVIDE A SUBMITTAL WITH ALL LINEAR DIFFUSER LOCATIONS PRIOR TO INSTALLATION.
12. LOCATE RECESSED DOWN LIGHTS, WALL WASHERS, SMOKE DETECTORS, EXIT SIGNS, SPEAKERS, FIRE SPRINKLERS, ETC. IN CENTER OF 24"x24" CEILING TILES OR IN CENTER OF 24"x24" PORTION OF 24"x48" CEILING TILES, UNLESS OTHERWISE NOTED.
13. PROVIDE SWITCHES AND LIGHT SENSORS FOR OPEN AREAS AND PRIVATE OFFICES. ACTUAL LOCATION OF ALL SWITCHES TO BE DETERMINED BY ELECTRICAL ENGINEER.
14. WHERE EXIT SIGNS ARE REQUIRED PER STATE & LOCAL CODES, THEY SHALL BE ILLUMINATED PER SAID CODES AND THE NEC. LOCATIONS SHALL BE COORDINATED WITH THE ARCHITECT.
15. PROVIDE BACK-UP POWER FOR EXIT SIGNS PER STATE & LOCAL CODES.
16. THE MEANS OF EGRESS, INCLUDING THE EXIT DISCHARGE, SHALL BE ILLUMINATED TO A LEVEL OF NOT LESS THAN ONE FOOT CANDLE AT THE WALKING SURFACE AT ALL TIMES THE BUILDING SPACE SERVED BY THE MEANS OF EGRESS IS OCCUPIED.
17. EMERGENCY LIGHTING SHALL BE (2) SEPARATE SOURCES OF POWER AND SHALL COMPLY WITH THE NEC.
18. PROVIDE FIRE DAMPERS AT ALL SUPPLY AND RETURN AIR OUTLETS, INLETS OR DUCTS PENETRATING FIRE RATED ASSEMBLIES, ENCLOSURES, WALLS, FLOORS OR SURFACES, AND AS REQUIRED BY THE FIRE DEPARTMENT.
19. CONTRACTOR SHALL PROVIDE EMERGENCY LIGHTING, STROBE LIGHTS, AUDIO-VISUAL ALARMS AND OCCUPANCY SENSORS TO MEET ALL APPLICABLE CODES.
20. CONTRACTOR SHALL PROVIDE LAMPS WITH TYPE IC RATED HOUSING WHERE FIXTURES COME IN DIRECT CONTACT WITH INSULATION.
21. EXIT SIGNS SHALL BE INTERNALLY OR EXTERNALLY ILLUMINATED AT ALL TIMES AND SHALL BE CONNECTED TO AN EMERGENCY POWER SYSTEM (BATTERIES, UNIT EQUIPMENT OR AN ON-SITE GENERATOR) THAT WILL AUTOMATICALLY ILLUMINATE THE EXIT SIGNS FOR A DURATION OF NOT LESS THAN 90 MINUETS.

PARTITION PLAN NOTES

1. CONTRACTOR AND ARCHITECT TO REVIEW & APPROVE CHALK LINES OF PARTITION LAYOUT PRIOR TO COMMENCEMENT OF PARTITION CONSTRUCTION.
2. CONTRACTOR TO VERIFY DIMENSIONS FOR ALL PLUMBING PARTITION.
3. EXTEND ALL STUDS AND WALL MATERIALS TO CONSTRUCTION ABOVE, U.O.N.
4. ALL CONDUIT PIPING IN ELECTRICAL ROOM TO BE CONCEALED WITHIN THE WALL CONSTRUCTION.
5. DOOR OPENINGS IN PARTITIONS NOT DIMENSIONED ARE TO BE LOCATED WITHIN 0'-4" OF ADJACENT PERPENDICULAR PARTITION.
6. CONTRACTOR SHALL USE 3-5/8" METAL STUDS MINIMUM AT ALL PLUMBING WALLS. CONTRACTOR TO VERIFY ACTUAL DEPTH REQUIRED, ANY DISCREPANCIES SHALL BE REPORTED TO THE ARCHITECT.
7. USE WATER RESISTANT GYPSUM BOARD/FIBER BOARD AT ALL AREAS SUBJECT TO MOISTURE OR WHERE TILE IS USED.
8. ALL PLUMBING WORK SHALL BE IN ACCORDANCE WITH LOCAL AND NATIONAL CODES.
9. ALL HOT WATER LINES SHALL BE PROPERLY INSULATED. SEE PLUMBING DRAWINGS.
10. ALL PLUMBING CLEAN-OUTS SHALL BE INSTALLED WHERE READILY ACCESSIBLE. CONTRACTOR SHALL COORDINATE ALL CLEAN-OUT LOCATIONS WITH EQUIPMENT, AND CABINETS. SUBMIT A PLAN OF ALL PROPOSED LOCATIONS TO ARCHITECT FOR APPROVAL PRIOR TO INSTALLATION.
11. ALL MILLWORK SHALL CONFORM TO STATE & LOCAL WOODWORKING STANDARDS.
12. FIELD MEASURE AS REQUIRED FOR ALL MILLWORK CONDITIONS PRIOR TO FABRICATION.
13. CONTRACTOR TO PROVIDE SHOP DRAWINGS FOR ARCHITECT AND TENANT APPROVAL PRIOR TO MANUFACTURE OF ANY CABINET WORK, MILLWORK AND ANY OTHER SPECIAL ITEMS REQUIRING CUSTOM SHOP FABRICATED WORK.
14. CONTRACTOR TO VERIFY FINAL LOCATION FOR CANTILEVERED COUNTERS AND IN-WALL SUPPORT BRACKETS PRIOR TO GYPSUM BOARD FINISHING OF WALLS. ALL FINAL INSTALLATION HEIGHTS FOR IN-WALL SUPPORT BRACKETS MUST MEET ALL ACCESSIBILITY CODES REQUIREMENTS WITH COUNTERTOP MATERIAL THICKNESS INCLUDED.
15. PROVIDE AND INSTALL ALL NECESSARY WALL BACKING, STIFFENERS, BRACING, BACK-UP PLATES AND/ OR SUPPORTING BRACKETS AS REQUIRED FOR THE INSTALLATION OF WALL-MOUNTED OR SUSPENDED EQUIPMENT OR BUILT-IN ITEMS. VERIFY REQUIREMENTS WITH MANUFACTURERS PRIOR TO INSTALLATION. SUPPLY CATALOG CUT SHEETS FOR ARCHITECT'S APPROVAL.
16. PROVIDE AND INSTALL ALL NECESSARY ELECTRICAL CONNECTIONS AND PLUMBING SUPPLY, FITTINGS & CONNECTORS TO COMPLETE INSTALLATION OF APPLIANCES & EQUIPMENT INDICATED ON PLAN. VERIFY REQUIREMENTS WITH MANUFACTURERS PRIOR TO INSTALLATION. SUPPLY CATALOG CUT SHEETS FOR ARCHITECT'S APPROVAL.
17. EXACT LOCATION OF FIRE EXTINGUISHER CABINETS TO BE CONFIRMED WITH ARCHITECT BEFORE INSTALLATION. PROVIDE ADDITIONAL FIRE EXTINGUISHERS & CABINETS AS REQUIRED BY THE FIRE DEPARTMENT FIELD INSPECTORS.
18. CONTRACTOR TO VERIFY LOCATION OF ALL THERMOSTATS WITH ARCHITECT PRIOR TO INSTALLATION.
19. ALL EXITS SHALL HAVE EXIT SIGNS AND ALL BLIND CORRIDOR TURNS SHALL HAVE DIRECTIONAL EXIT SIGNS.
20. PREPARE ALL FLOOR SURFACES AS REQUIRED TO RECEIVE FINISHES AS NOTED ON FINISH PLAN, ENLARGED FINISH PLANS & FINISH LEGEND.
21. UNLESS OTHERWISE NOTED, ALL GYPSUM BOARD SURFACES, WALLS, AND CEILINGS SHALL BE TAPED, SANDED SMOOTH TO A "LEVEL 4" FINISH, SO AS TO RECEIVE PAINT OR WALL COVERING MATERIAL.
22. PROVIDE SOUND INSULATION AT PERIMETER WALLS OF RESTROOMS, LOBBY, STAIRS, AND ACROSS CEILING OF RESTROOMS TO CREATE AN ACOUSTIC ENVELOPE, U.O.N.
23. PATCH AND FILL VARIOUS OPENINGS AT EXISTING GYPSUM BOARD PARTITIONS AND SOFFITS FOLLOWING REMOVAL OR INSTALLATION OF ANY SURFACE MOUNTED OR RECESSED FURNISHINGS, RECEPTACLES, UTILITY PIPING, SHELF STANDARDS & ALL OTHER SIMILAR ELEMENTS INDICATED TO BE REMOVED DURING THE DEMOLITION PHASE OR INSTALLED DURING THE CONSTRUCTION PHASE: TAPE AND SEAL ALL SEAMS WITH JOINT COMPOUND: APPLY NEW FINISH TO MATCH EXISTING FINISH AT ADJACENT GYPSUM BOARD SURFACES AND FEATHER NEW FINISH WITH EXISTING FINISH TO PROVIDE CONSISTENT & CONTINUOUS FINISH.

FIRE AUTHORITY NOTES

1. FINAL INSPECTION BY FIRE DEPARTMENT IS REQUIRED – SCHEDULE 72 HOURS IN ADVANCE.
2. THE PROJECT ADDRESS SHALL BE PROVIDED FOR ALL NEW AND EXISTING BUILDINGS IN A POSITION AS TO BE PLAINLY VISIBLE AND LEGIBLE FROM THE STREET OR ROAD FRONTING THE PROPERTY PER LOCAL FIRE DEPARTMENT STANDARDS.
3. AN UNOBSTRUCTED ALL-WEATHER FIRE APPARATUS ACCESS ROAD SHALL BE IN PLACE PRIOR TO DELIVERY OF COMBUSTIBLE BUILDING MATERIALS TO THE SITE.
4. FIRE PREVENTION WATER SERVICE SHALL BE IN SERVICE PRIOR TO DELIVERY OF COMBUSTIBLE BUILDING MATERIALS TO THE SITE.
5. ACCESS GATES SHALL BE APPROVED PRIOR TO INSTALLATION AND SHALL BE IN COMPLIANCE WITH LOCAL FIRE AUTHORITY.
6. FIRE SPRINKLER SYSTEM(S) SHALL MEET STATE & LOCAL FIRE CODES AND BE PROVIDED TO PROTECT ENTIRE BUILDING INCLUDING PROJECTIONS OVER 4'-0" AND SPRAY BOOTH.
7. FIRE SPRINKLER SYSTEM(S) AND ALL CONTROL VALVES, INCLUDING EXTERIOR SHALL BE SUPERVISED BY A U.L. LISTED CENTRAL ALARM STATION OR PER STATE & LOCAL FIRE CODES.
8. ALL VALVES CONTROLLING THE WATER SUPPLY FOR AUTOMATIC SPRINKLER SYSTEMS AND WATER-FLOW SWITCHES ON ALL SPRINKLER SYSTEMS SHALL BE ELECTRICALLY MONITORED WHERE THE NUMBER OF SPRINKLERS IS (100) OR MORE.
9. ELECTRICAL SUBCONTRACTORS TO INSTALL WIRING FOR FIRE SPRINKLER, ALARM BELL AND TELEPHONE WARNING AS REQUIRED BY FIRE DEPARTMENT.
10. INSTALLATION OF FIRE ALARM SYSTEMS SHALL BE IN ACCORDANCE WITH STATE & LOCAL FIRE CODES.
11. COMPLETE PLANS AND SPECIFICATIONS FOR ALL FIXED FIRE PROTECTION EQUIPMENT INCLUDING AUTOMATIC SPRINKLERS AND OTHER FIRE-PROTECTION SYSTEMS, SHALL BE SUBMITTED BY INSTALLING CONTRACTOR. SUCH PLANS SHALL BE APPROVED BY LOCAL FIRE AUTHORITY PRIOR TO INSTALLATION.
12. LOCATIONS AND CLASSIFICATIONS OF FIRE EXTINGUISHERS SHALL BE IN ACCORDANCE WITH STATE & LOCAL FIRE CODES AND PLACEMENT IS SUBJECT TO THE APPROVAL OF THE FIRE INSPECTOR. VERIFY QUANTITY & EXACT LOCATION FROM FIRE DEPARTMENT PRIOR TO ORDERING.
13. AT LEAST ONE (1) FIRE EXTINGUISHER WITH A MINIMUM RATING OF: 2-A-10B:C (FOR OFFICE), OR 10-A-80B:C (FOR WAREHOUSE), SHALL BE PROVIDED WITHIN 75'-0" MAXIMUM TRAVEL DISTANCE FOR EACH 3,000 SQUARE FEET OR PORTION THEREOF ON EACH FLOOR.
14. STORAGE, DISPENSING OR USE OF ANY FLAMMABLE AND COMBUSTIBLE LIQUIDS, FLAMMABLE AND COMPRESSED GASES, AND OTHER HAZARDOUS MATERIALS SHALL COMPLY WITH STATE & LOCAL FIRE CODES. THE STORAGE AND USE OF HAZARDOUS MATERIALS SHALL BE APPROVED BY THE FIRE AUTHORITY PRIOR TO ANY MATERIALS BEING STORED OR USED ON SITE. A SEPARATE PLAN SUBMITTAL IS REQUIRED PRIOR TO THE STORAGE AND USE OF HAZARDOUS MATERIALS.
15. BUILDING(S) NOT APPROVED FOR HIGH-PILED STOCK (MATERIALS IN CLOSELY PACKED PILES OR ON PALLETS, OR IN RACKS WHERE THE TOP OF STORAGE EXCEEDS 12'-0" IN HEIGHT, AND 6'-0" FOR GROUP "A" PLASTICS AND CERTAIN OTHER HIGH-HAZARD COMMODITIES). HIGH-PILED STOCK SHALL BE APPROVED BY THE FIRE AUTHORITY PRIOR TO MATERIALS BEING STORED ON SITE. A SEPARATE PLAN SUBMITTAL IS REQUIRED FOR HIGH-PILED STORAGE IN ACCORDANCE WITH STATE & LOCAL FIRE CODES.
16. A LETTER OF INTENDED USE MAY BE REQUIRED BY THE FIRE INSPECTOR.
17. ALL REQUIRED FIRE DOORS SHALL BEAR A LABEL FROM A RECOGNIZED AGENCY SHOWING THE SPECIFIC RATING.
18. EXIT SIGNS AND ILLUMINATION SHALL CONFORM TO ALL APPLICABLE BUILDING AND FIRE CODES.
19. EXIT DOORS SHALL BE OPERABLE FROM THE INSIDE WITHOUT THE USE OF A KEY OR ANY SPECIAL KNOWLEDGE OR EFFORT.
20. PROVIDE OR MODIFY AS NEEDED SPRINKLER ALARM AND SMOKE DETECTION SYSTEM PER APPLICABLE CODES INCLUDING IF NECESSARY FOR HORNS, STROBE LIGHTS, CONTROL PANEL CONNECTIONS, SMOKE DETECTORS, AUDIO VISUAL ALARMS. SUBMIT SHOP DRAWINGS TO THE FIRE MARSHAL FOR APPROVAL.

DOOR NOTES

1. VERIFY THAT ALL DOORS AND DOOR HARDWARE MEET THE REQUIREMENTS OF ALL GOVERNING CODES & STANDARDS. NOTIFY THE ARCHITECT IMMEDIATELY IN CASE OF DISCREPANCY.
2. FIELD MEASURE, AS REQUIRED, ALL DOORS PRIOR TO FABRICATION.
3. PROVIDE A SIGN ON OR NEAR THE MAIN EXIT DOOR READING: "THIS DOOR TO REMAIN UNLOCKED WHEN BUILDING IS OCCUPIED".
4. VERIFY THAT EXISTING DOORS COMPLY WITH ACCESSIBILITY REQUIREMENTS.
5. RATED DOORS SHALL COMPLY WITH REQUIREMENTS OF ALL GOVERNING CODES & STANDARDS AND SHALL BEAR A LABEL FROM A RECOGNIZED AGENCY SHOWING THE SPECIFIC RATINGS.
6. ALL HARDWARE TO BE LEVER-TYPE PER GOVERNING CODES & ACCESSIBILITY STANDARDS.
7. DOOR HANDLES, PULLS OR KNOBS SHALL BE INSTALLED AT 40" ABOVE FINISH FLOOR. ALL OTHER OPERABLE PARTS OF DOOR HARDWARE (SUCH AS DEADBOLTS, KEYHOLES... ETC.) ARE TO BE CENTERED BETWEEN 34" AND 44" ABOVE FINISH FLOOR. IF EXISTING BUILDING STANDARD EXISTS, MATCH BUILDING STANDARD AND CONFIRM COMPLIANCE WITH ACCESSIBILITY REQUIREMENTS.
8. SPECIAL LOCKING DEVICES SHALL BE OF AN APPROVED TYPE.
9. PROVIDE WEATHER SEALS ON ALL EXTERIOR DOORS PER ANSI STANDARDS.
10. CONTRACTOR IS RESPONSIBLE TO COORDINATE & VERIFY ALL DOOR FRAME THROAT THICKNESS' FOR EACH LOCATION.
11. ALL DOOR FRAMES TO BE FACTORY FINISHED.
12. ALL DOOR STOPS TO HAVE 2x6 BACKING IN THE WALL BEHIND.
13. MAXIMUM UNDERCUT OF ALL DOORS NOT IN A RATED CORRIDOR SHALL NOT EXCEED 1/2" ABOVE FINISH FLOOR SURFACE.
14. CONTRACTOR SHALL REFINISH ANY BLEMISHED DOOR OR REPLACE SAID DOOR IF NOT ABLE TO REFINISH TO "AS NEW" CONDITION.
15. ALL DOORS TO BE OPERABLE FROM THE INSIDE WITHOUT A KEY OR ANY SPECIAL KNOWLEDGE OR EFFORT.
16. ALL DOORS WITH ELECTRONIC SECURITY DOOR LOCKS MUST BE OPENABLE FOR EXITING PURPOSES UNDER ALL CONDITIONS. INCLUDING A POWER OUTAGE.
17. IF BUILDING STANDARDS ARE INCONSISTENT FOR DOORS, RELITES, HARDWARE, DOOR AND RELITE FRAMES OR OTHER STANDARD DETAILS, THEN CONTRACTOR MUST VERIFY WITH DESIGNER AND OWNER PRIOR TO CONSTRUCTION.

PRE-CONST. MEETING

1. PRIOR TO START OF CONSTRUCTION, A PRE-CONSTRUCTION MEETING IS TO BE HELD INCLUDING A RESPONSIBLE REPRESENTATIVE OF THE ARCHITECT, THE OWNER AND THE GENERAL CONTRACTOR. THE DISCUSSION WILL BE IN REGARDS TO THE ARCHITECT-OWNER-CONTRACTOR (AOC) CORRESPONDENCE PROCESSES AND PROCEDURES. AT A MINIMUM, THE FOLLOWING IS TO BE DISCUSSED:
2. AOC REGULARLY SCHEDULED MEETINGS
    - 2.1. WHEN
    - 2.2. WHERE
    - 2.3. HOW OFTEN
    - 2.4. IN PERSON VERSUS CONFERENCE CALLS
    - 2.5. APPROXIMATE ALOTTED TIME PER MEETING
3. CONSTRUCTION MEETING MINUTES
    - 3.1. FORMAT FOR THE MINUTES
    - 3.2. CONTRACTOR TO AUTHOR THE MINUTES
4. FORMAL CHANGES IN THE WORK
    - 4.1. ADDENDA AND BULLETINS ISSUED BY THE ARCHITECT
    - 4.2. CHANGE ORDER REQUESTS ISSUED BY THE CONTRACTOR
    - 4.3. CHANGE ORDERS ISSUED BY THE CONTRACTOR
    - 4.4. TRACKING MECHANISMS
5. REQUESTS FOR INFORMATION PROCESS
    - 5.1. TRACKING MECHANISM
    - 5.2. DEFINE Cc: RECIPIENT LIST
    - 5.3. STANDARD RESPONSE TIMES (2-5 WORKING DAYS IS STANDARD)
6. SUBMITTAL PROCESS
    - 6.1. TRACKING MECHANISM
    - 6.2. ISSUANCE SCHEDULE BY THE CONTRACTOR
    - 6.3. DEFINE Cc RECIPIENT LIST
    - 6.4. STAMPED REVIEWED AND APPROVED BY CONTRACTOR PRIOR TO SUBMISSION
    - 6.5. NON-REQUESTED SUBMITTALS MAY NOT BE REVIEWED
    - 6.6. STANDARD RESPONSE TIMES (7-10 WORKING DAYS IS STANDARD)
7. SUBSTITUTIONS
    - 7.1. REQUEST FORMS WITH REASONS AND BENEFIT FOR SUBSTITUTION
8. PAYMENT APPLICATIONS
    - 8.1. PROCESS
    - 8.2. SUBMITTAL DATE
    - 8.3. ANTICIPATED TURN-AROUND
9. PUNCH LISTS
    - 9.1. ONLY ONE PUNCH WALK TO BE PROVIDED BY DESIGN TEAM
    - 9.2. CONTRACTOR TO PUNCH AND MAKE CORRECTIONS PRIOR TO DESIGN TEAM PUNCH.
    - 9.3. A FINAL WALK WILL OCCUR ONLY IF THE ARCHITECT IS CONTRACTED TO DO SO.

G.C. INSTRUCTIONS

SUBMITTALS

1. AT THE START OF JOB PROVIDE A SCHEDULE OF ALL ANTICIPATED SUBMITTALS AND DATES. FLAG SUBMITTALS WHICH ARE OR COULD BE CRITICAL PATH. FLAG SUBMITTALS THAT WILL BE REQUESTED TO BE EXPEDITED FASTER THAN THE STANDARD 7-10 DAYS.
2. A SUBMITTAL LOG IS TO BE MAINTAINED BY THE GENERAL CONTRACTOR AND A CURRENT COPY IS TO BE INCLUDED WITH EACH SUBMISSION.
3. ALL SUBMITTALS MUST BE REVIEWED AND APPROVED WITH A STAMP AND SIGNATURE BY THE GENERAL CONTRACTOR PRIOR TO SUBMISSION. THE REVIEW WILL INCLUDE BUT NOT BE LIMITED TO:
    - 3.1. CONFIRMING THAT THE SUBMITTAL MEETS THE REQUIREMENTS OF THE CONTRACT DOCUMENTS.
    - 3.2. COORDINATION HAS TAKEN PLACE WITH ALL INTERCONNECTING TRADES
    - 3.3. THE SUBMITTAL IS COMPLETE AND COMPREHENSIVE
4. REQUESTS ON SUBMITTALS FOR DIMENSIONS WHICH CAN BE DISCERNABLE THROUGH MATHEMATICAL MEANS FROM INFORMATION ALREADY PROVIDED ON THE CONTRACT DOCUMENTS WILL NOT BE PROVIDED.
5. SUBMITTALS NOT REQUESTED BY THE CONTRACT DOCUMENTS MAY OR MAY NOT BE REVIEWED AT THE DESIGN TEAMS DISCRETION.
6. SUBMITTALS ARE TO BE ROUTED THROUGH THE ARCHITECT AND ARE NOT TO BE SENT DIRECTLY TO ARCHITECT'S CONSULTANTS UNLESS SPECIFICALLY AUTHORIZED BY THE ARCHITECT.
7. MINOR CHANGES IN THE WORK MAY OCCUR AS A RESULT OF THE DESIGN TEAM'S REVIEW. IF A CHANGE RESULTS IN MODIFICATIONS TO THE CONTRACT PRICE OR SCHEDULE, THE CONTRACTOR WILL ISSUE A CHANGE ORDER REQUEST FOR REVIEW AND APPROVAL BY THE OWNER AND ARCHITECT PRIOR TO PROCEEDING.

REQUESTS FOR INFORMATION (RFI's)

1. THE GENERAL CONTRACTOR IS TO REVIEW ALL PROSPECTIVE RFI's AND MAKE EVERY EFFORT TO ANSWER THEM BEFORE SUBMITTING TO THE DESIGN TEAM.
2. MINOR CHANGES IN THE WORK MAY OCCUR AS A RESULT OF THE DESIGN TEAM'S REVIEW. IF A CHANGE RESULTS IN MODIFICATIONS TO THE CONTRACT PRICE OR SCHEDULE, THE CONTRACTOR WILL ISSUE A CHANGE ORDER REQUEST FOR REVIEW AND APPROVAL BY THE OWNER AND ARCHITECT PRIOR TO PROCEEDING.
3. AN RFI LOG IS TO BE MAINTAINED BY THE GENERAL CONTRACTOR AND A CURRENT COPY IS TO BE INCLUDED WITH EACH RFI SUBMISSION ALONG WITH ANY CRITICAL RESPONSE DUE DATES.
4. RFI's REGARDING METHODS AND MEANS OF CONSTRUCTION WILL NOT BE REVIEWED AND WILL BE REMOVED FROM THE RFI LOG.

CHANGE ORDERS

1. A COMPLETE SCHEDULE OF VALUES OF THE BASE CONTRACT IS TO BE PROVIDED TO THE OWNER AND ARCHITECT PRIOR TO THE START OF ANY WORK.
2. ALL CHANGE ORDER REQUESTS ARE TO BE REVIEWED AND APPROVED BY THE OWNER AND ARCHITECT PRIOR TO SUBMISSION OF A CHANGE ORDER.
3. CHANGE ORDER REQUESTS ARE TO INCLUDE A COMPLETE BREAKDOWN BY TRADE ALONG WITH TRADE BACK-UP AND UNIT PRICING WHERE APPLICABLE.
4. A CHANGE ORDER REQUEST AND CHANGE ORDER LOG IS TO BE MAINTAINED BY THE GENERAL CONTRACTOR AND SUBMITTED ALONG WITH EACH CHANGE ORDER REQUEST.

This sheet of drawings has not been reviewed for code compliance.

RSN: 1166695
Permit #: 16-1212380 LT

THESE DRAWINGS AND SPECIFICATIONS ARE THE PROPERTY AND COPYRIGHT OF WARE MALCOMB AND SHALL NOT BE USED ON ANY OTHER WORK EXCEPT BY AGREEMENT WITH WARE MALCOMB. WRITTEN DIMENSIONS SHALL TAKE PRECEDENCE OVER SCALED DIMENSIONS AND SHALL BE VERIFIED ON THE JOB SITE. ANY DISCREPANCY SHALL BE BROUGHT TO THE NOTICE OF WARE MALCOMB PRIOR TO THE COMMENCEMENT OF ANY WORK.

WARE MALCOMB
Leading Design for Commercial Real Estate
architecture
planning
interiors
graphics
civil engineering
1600 champa st.
suite 350
denver. colorado 80202
p 720.488.2626

STATE OF COLORADO
MATTHEW NATHAN CHAIKEN
306199
LICENSED ARCHITECT
NOV 14 2016

2ND FLOOR WHITE BOX
1444 SOUTH POTOMAC
AURORA, COLORADO

GENERAL NOTES

DATE	REMARKS	DATE	REMARKS
11.14.16	BLDG. DEPT SUBMITTAL		

PA / PM:	A. HUFF
DRAWN BY:	AKN
JOB NO.:	DEN16-6168-00

SHEET
A0.2

Mon, 14 Nov 2016

W:\DEN\16\6168\00\Architectural\Cad\CD\6168_A02.dwg

CAUTION: IF THIS SHEET IS NOT 30"x42" IT IS A REDUCED PRINT

21

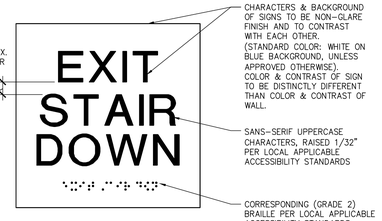

TACTILE "EXIT STAIR DOWN" SIGN

SCALE: 3"= 1'-0" IACSI-Exitstairdown 16

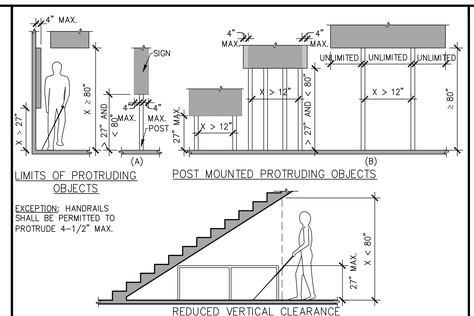

LIMITS OF PROTRUDING OBJECTS

POST MOUNTED PROTRUDING OBJECTS

EXCEPTION: HANDRAILS SHALL BE PERMITTED TO PROTRUDE 4-1/2" MAX.

REDUCED VERTICAL CLEARANCE

PROTRUDING OBJECTS

SCALE: 1/4"=1'-0" IACMI-Protruding_objects_ICC-01 11

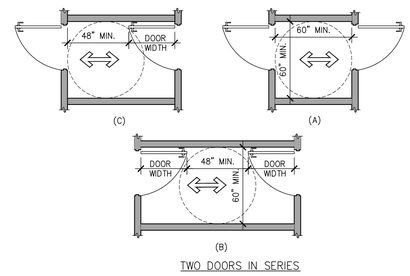

TWO DOORS IN SERIES

DOORS, DOORWAYS & GATES

SCALE: 1/4"=1'-0" IACDR-Series_ICC-01 6

ACCESSIBILITY NOTES

1. ALL ITEMS ARE FOR REFERENCE ONLY, ANY ITEM NOT SHOW SHALL BE ADDRESSED AS REFERENCED ON ICC-A117.1-2009 AND THE BUILDING CODE MENTIONED ON THE TITLE SHEET.
2. ANY DISCREPANCIES CONTAINED HEREIN DO NOT RELIEVE THE CONTRACTOR OR OWNER FROM COMPLYING WITH CURRENT STATE AND FEDERAL ACCESSIBILITY STANDARDS.
3. THE CONTRACTOR SHALL BECOME FAMILIAR WITH THE CURRENT STATE AND FEDERAL ACCESSIBILITY STANDARDS.
4. REFER TO ICC-A117.1-2009 AND THE BUILDING CODE MENTIONED ON THE TITLE SHEET FOR CURRENT AND UP TO DATE INFORMATION.

22

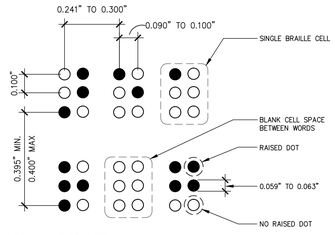

DOT HEIGHT 0.025" MIN. TO 0.037" MAX.
MEASURED CENTER TO CENTER.

BRAILLE MEASUREMENT

SCALE: N.T.S. IACSI-Braille_ICC-01 17

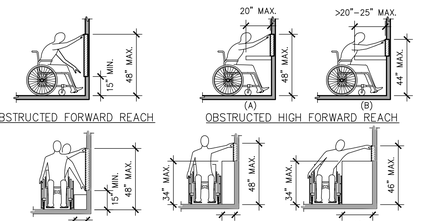

UNOBSTRUCTED FORWARD REACH

OBSTRUCTED HIGH FORWARD REACH

UNOBSTRUCTED HIGH SIDE REACH

OBSTRUCTED HIGH SIDE REACH

MAXIMUM REACH DEPTH	0.5" (13 mm)	2" (51 mm)	5" (125 mm)	6" (150 mm)	9" (230 mm)	11" (280 mm)
MAXIMUM REACH HEIGHT	48" (1220 mm)	48" (1170 mm)	42" (1065 mm)	40" (1015 mm)	36" (915 mm)	34" (865 mm)

REACH RANGES

SCALE: 1/4"=1'-0" IACMI-Reach_range_ICC-01 12

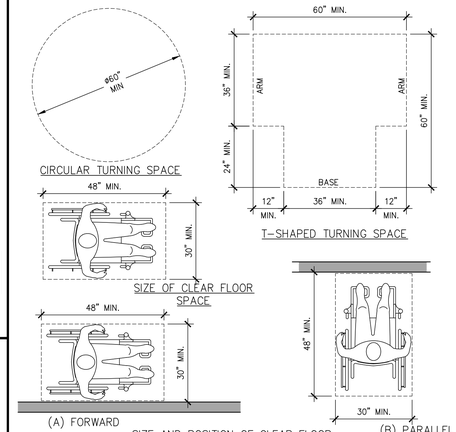

CIRCULAR TURNING SPACE

T-SHAPED TURNING SPACE

SIZE OF CLEAR FLOOR SPACE

(A) FORWARD

(B) PARALLEL

SIZE AND POSITION OF CLEAR FLOOR SPACE

MANEUVERING CLEARANCE IN AN ALCOVE, FORWARD APPROACH

MANEUVERING CLEARANCE IN AN ALCOVE, PARALLEL APPROACH

CLEAR FLOOR OR GROUND SPACE

SCALE: 1/2"=1'-0" IACMI-Floor_space_ICC-01 8

NOTES:
1. FLOOR OR GROUND SURFACE WITHIN REQUIRED MANEUVERING CLEARANCES SHALL COMPLY WITH [FLOOR OR GROUND SURFACES & CHANGES IN LEVEL] DETAIL AND SHALL HAVE A SLOPE NOT STEEPER THAN 1:48. CHANGES IN LEVEL ARE NOT PERMITTED AT DOOR LANDINGS.
2. THRESHOLDS, IF PROVIDED AT DOORWAYS SHALL BE 1/2" HIGH MAX. RAISED THRESHOLDS AND CHANGES IN LEVEL AT DOORWAYS SHALL COMPLY WITH [FLOOR OR GROUND SURFACES & CHANGES IN LEVEL] DETAIL.
3. HANDLES, PULLS, LATCHES, LOCKS AND OTHER OPERABLE PARTS ON DOORS AND GATES SHALL BE OPERABLE WITH ONE HAND AND SHALL NOT REQUIRE TIGHT GRASPING, PINCHING OR TWISTING OR THE WRIST.
4. THE FORCE REQUIRED TO ACTIVATE OPERABLE PARTS SHALL BE 5 LBS (22.5 N) MAX.
5. OPERABLE PARTS OF DOOR HARDWARE SHALL BE 34" MIN. AND 48" MAX. ABOVE THE FINISH FLOOR OR GROUND.
6. WHERE SLIDING DOORS ARE IN THE FULLY OPEN POSITION, OPERATING HARDWARE SHALL BE EXPOSED AND USABLE FROM BOTH SIDES.
7. DOOR AND GATE CLOSERS SHALL BE ADJUSTED SO THAT FROM AN OPEN POSITION OF 90° THE TIME REQUIRED TO MOVE THE DOOR TO A POSITION OF 12" FROM THE LATCH IS 5 SECONDS MIN.
8. DOOR AND GATE SPRING HINGES SHALL BE ADJUSTED SO THAT FROM THE OPEN POSITION OF 70° THE DOOR OR GATE SHALL MOVE TO THE CLOSED POSITION IN 1.5 SECONDS MIN.
9. THE FORCE FOR PUSHING OR PULLING OPEN A DOOR OR GATE SHALL BE AS FOLLOWS:
   9.1. INTERIOR HINGED DOORS AND GATES: 5 LBS (22.5 N) MAX.
   9.2. SLIDING OR FOLDING DOORS: 5 LBS (22.5 N) MAX.
   9.3. REQUIRED FIRE DOORS: THE MINIMUM OPENING FORCE ALLOWABLE BY THE APPROPRIATE ADMINISTRATIVE AUTHORITY, NOT TO EXCEED 15 LBS (66.7 N).
   9.4. EXTERIOR HINGED DOORS: 5 LBS (22.5 N) MAX.
10. WHERE AUTOMATIC AND POWER-ASSISTED DOORS AND GATES WITHOUT STANDBY POWER ARE PART OF A MEANS OF EGRESS THE CLEAR BREAK OUT OPENING AT SWINGING OR SLIDING DOORS AND GATES SHALL BE 32" MIN. WHEN OPERATED IN EMERGENCY MODE.

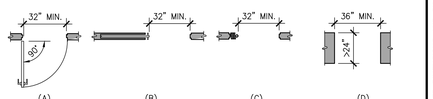

(A) HINGED DOOR (B) SLIDING DOOR (C) FOLDING DOOR (D) DOORWAYS WITHOUT DOORS

CLEAR WIDTH OF DOORWAYS

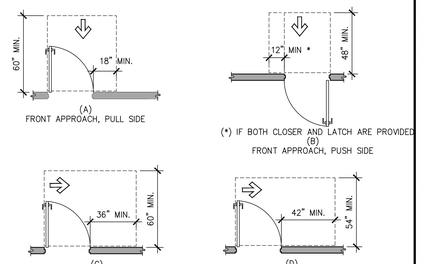

FRONT APPROACH, PULL SIDE

FRONT APPROACH, PUSH SIDE

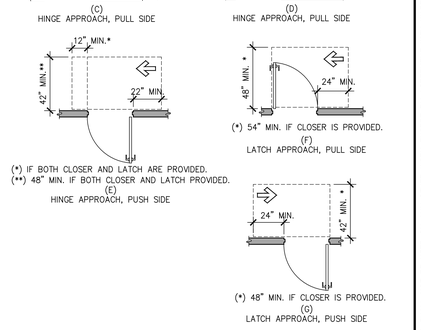

HINGE APPROACH, PULL SIDE

HINGE APPROACH, PULL SIDE

HINGE APPROACH, PUSH SIDE

LATCH APPROACH, PULL SIDE

LATCH APPROACH, PUSH SIDE

MANEUVERING CLEARANCE AT MANUAL SWINGING DOORS

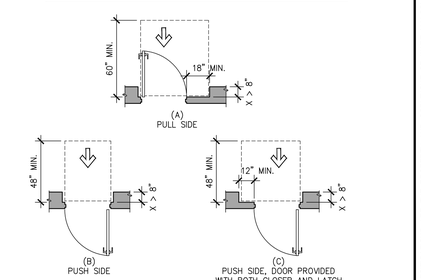

MANEUVERING CLEARANCE AT RECESSED DOORS

DOORS, DOORWAYS & GATES

SCALE: 1/4"=1'-0" IACDR-1_ICC-01 5

23

24

25

18

19

20

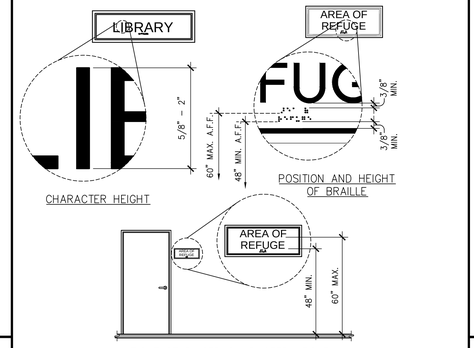

CHARACTER HEIGHT

POSITION AND HEIGHT OF BRAILLE

HEIGHT OF RAISED CHARACTER ABOVE FINISH FLOOR OR GROUND

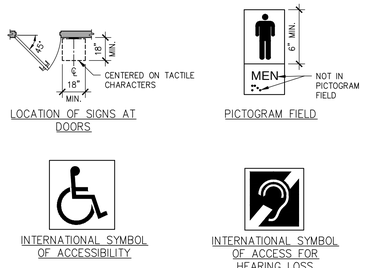

LOCATION OF SIGNS AT DOORS

PICTOGRAM FIELD

INTERNATIONAL SYMBOL OF ACCESSIBILITY

INTERNATIONAL SYMBOL OF ACCESS FOR HEARING LOSS

SIGNS

SCALE: N.T.S. IACSI-Signs_ICC-01 14

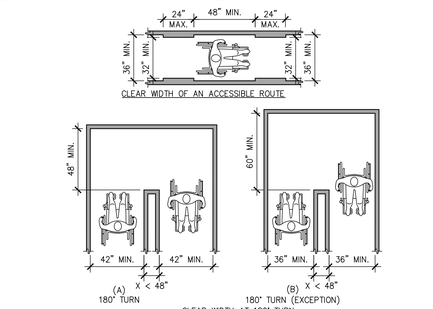

CLEAR WIDTH OF AN ACCESSIBLE ROUTE

CLEAR WIDTH AT 180° TURN

CLEAR WIDTH

SCALE: 1/4"=1'-0" IACMI-Clear_width_ICC-01 9

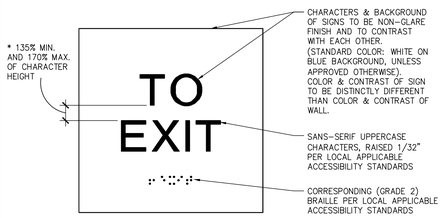

TACTILE "TO EXIT" SIGN

SCALE: 3"= 1'-0" IACSI-Toexit 15

NOTES:
1. FLOOR AND GROUND SURFACES SHALL BE STABLE, FIRM AND SLIP RESISTANT.
2. CARPET OR CARPET TILE SHALL BE SECURELY ATTACHED AND SHALL HAVE A FIRM CUSHION, PAD OR BACKING OR NO CUSHION OR PAD. CARPET OR CARPET TILE SHALL HAVE A LEVEL LOOP, TEXTURED LOOP, LEVEL CUT PILE, LEVEL CUT/UNCUT PILE TEXTURE. PILE HEIGHT SHALL COMPLY WITH CARPET PILE HEIGHT FIGURE BELOW. EXPOSED EDGES OF CARPET SHALL BE FASTENED TO FLOOR SURFACES AND SHALL HAVE TRIM ON THE ENTIRE LENGTH OF THE EXPOSED EDGE. CARPET EDGE SHALL COMPLY WITH CHANGE IN LEVEL FIGURES BELOW.

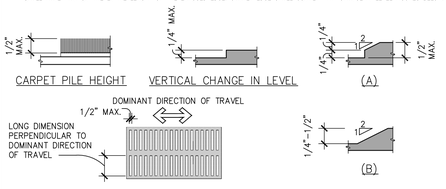

CARPET PILE HEIGHT

VERTICAL CHANGE IN LEVEL

ELONGATED OPENINGS IN FLOOR OR GROUND SPACE

BEVELED CHANGE IN LEVEL

FLOOR OR GROUND SURFACES & CHANGES IN LEVEL

SCALE: N.T.S. IACMI-Floor_surface_level_ICC-01 10

This sheet of drawings has not been reviewed for code compliance.

RSN: *1166695*
Permit #: *16-1212380 LT*

THESE DRAWINGS AND SPECIFICATIONS ARE THE PROPERTY AND COPYRIGHT OF WARE MALCOMB AND SHALL NOT BE USED ON ANY OTHER WORK EXCEPT BY AGREEMENT WITH WARE MALCOMB. WRITTEN DIMENSIONS SHALL TAKE PRECEDENCE OVER SCALED DIMENSIONS AND SHALL BE VERIFIED ON THE JOB SITE. ANY DISCREPANCY SHALL BE BROUGHT TO THE NOTICE OF WARE MALCOMB PRIOR TO THE COMMENCEMENT OF ANY WORK.

WARE MALCOMB
Leading Design for Commercial Real Estate

architecture
planning
interiors
graphics
civil engineering

1600 champa st.
suite 350
denver, colorado 80202
p 720.865.2626

CHRISTOPHER A. CHARRON 306199 REGISTERED ARCHITECT NOV 14 2016

2ND FLOOR WHITE BOX
1444 SOUTH POTOMAC
AURORA, COLORADO

ACCESSIBILITY DETAILS

DATE	BLDG. DEPT SUBMITTAL	DATE	REMARKS
11.14.16			

PA / PM:	A. HUFF
DRAWN BY:	AKN
JOB NO.:	DEN16-6168-00

SHEET
A0.3

W:\DEN\16\6168\00\Architectural\Cad\CD\6168_A03\6168_A03.dwg
Mon, 14 Nov 2016

CAUTION: IF THIS SHEET IS NOT 30"x42" IT IS A REDUCED PRINT

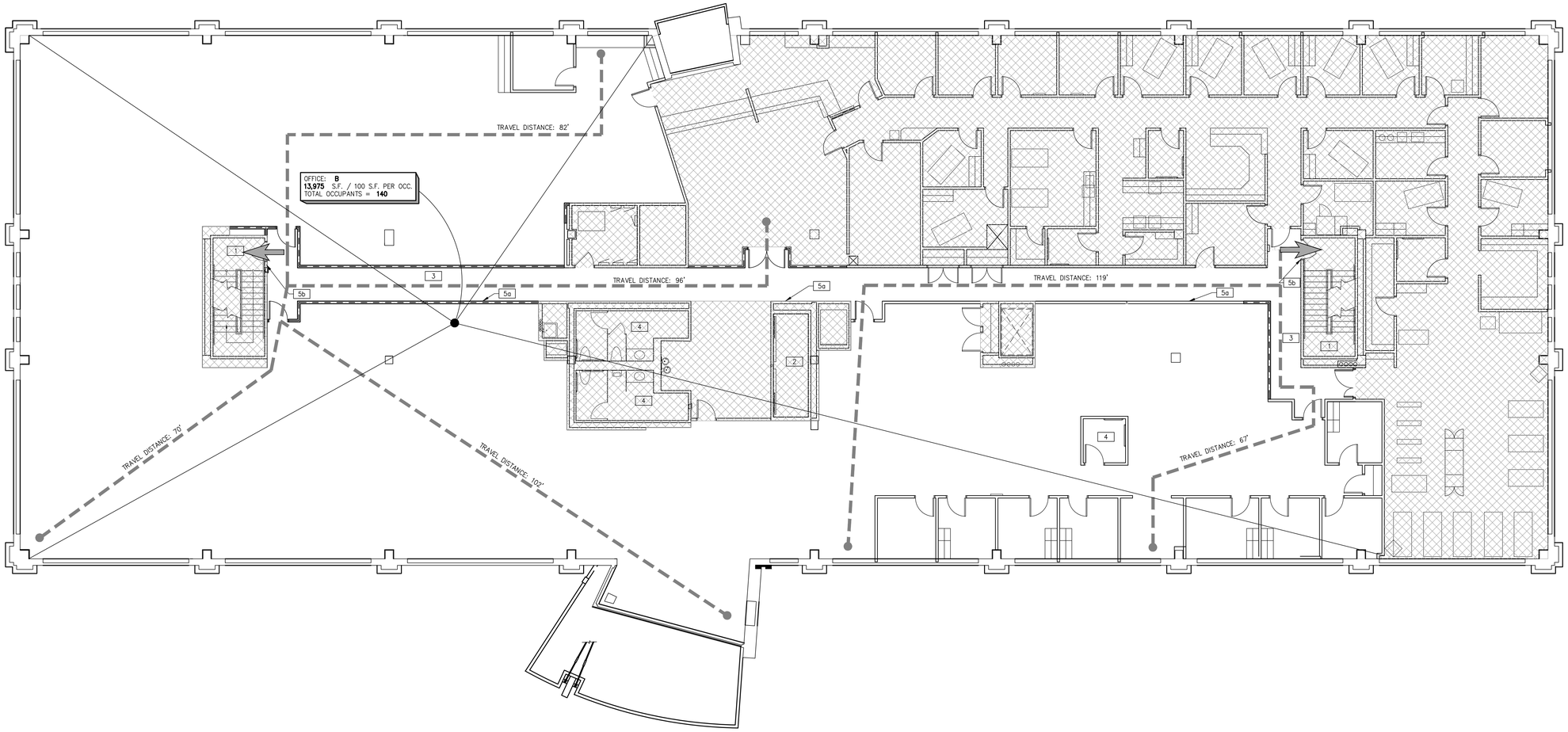

1/8"=1'-0"

0 4' 8' 16' 32'

OCCUPANCY AND EGRESS PLAN

SCALE: 1/8"=1'-0"

1 N

City of Aurora Building Division
Reviewed for Code Compliance
Approved as Noted: *pmckown*
Date: *Dec 06, 2016*
2015 INTERNATIONAL CODES & 2014 NEC

RSN: *1166695*
Permit #: *16-1212380 LT*

OCCUPANCY & EGRESS NOTES

1. EXISTING 1-HR RATED STAIR TO REMAIN.
2. EXISTING 1-HR RATED ELEVATOR TO REMAIN.
3. NEW AREA OF 1-HR CORRIDOR.
4. EXISTING FULLY ACCESSIBLE RESTROOM FACILITY.
5. WALL-MOUNTED TACTILE SIGNS LISTED BELOW AT LOCATIONS INDICATED. SEE 15/A0.3 THRU 16/A0.3
   a) "TO EXIT"
   b) "EXIT STAIR DOWN"

SEE SHEET A0.1 & A0.2 FOR GENERAL NOTES

LEGEND

MAXIMUM TRAVEL DISTANCE.

AREA NOT IN CONTRACT (N.I.C.).

OCCUPANCY & EXIT LEGEND

EXISTING EXIT.

NOTE: ADDITIONAL DIRECTIONAL EXIT SIGNS MAY BE REQUIRED PRIOR TO FINAL INSPECTION AND SUBJECT TO BUILDING INSPECTOR.

MAXIMUM TRAVEL DISTANCE TO EXITS: (1016.2 SPRINKLERED BUILDING)

B/BUSINESS 300 FEET MAX.

THESE DRAWINGS AND SPECIFICATIONS ARE THE PROPERTY AND COPYRIGHT OF WARE MALCOMB AND SHALL NOT BE USED ON ANY OTHER WORK EXCEPT BY AGREEMENT WITH WARE MALCOMB. WRITTEN DIMENSIONS SHALL TAKE PRECEDENCE OVER SCALED DIMENSIONS AND SHALL BE VERIFIED ON THE JOB SITE. ANY DISCREPANCY SHALL BE BROUGHT TO THE NOTICE OF WARE MALCOMB PRIOR TO THE COMMENCEMENT OF ANY WORK.

WARE MALCOMB
Leading Design for Commercial Real Estate

architecture
planning
interiors
graphics
civil engineering

1600 champa st.
suite 350
denver, colorado 80202
p 720.883.3636

ANDREW K. NEWMAN
CHANDA
306199
REGISTERED ARCHITECT
NOV 14 2016

2ND FLOOR WHITE BOX

1444 SOUTH POTOMAC

AURORA, COLORADO

OCCUPANCY AND EGRESS PLAN

DATE	REMARKS
11.14.16	BLDG. DEPT SUBMITTAL

PA / PM:	A. HUFF
DRAWN BY:	AKN
JOB NO.:	DEN16-6168-00

SHEET
A1.1

W:\DEN\16\6168\00\Architectural\Cad\D2\6168_A11.dwg

Mon, 14 Nov 2016

CAUTION: IF THIS SHEET IS NOT 30"x42" IT IS A REDUCED PRINT

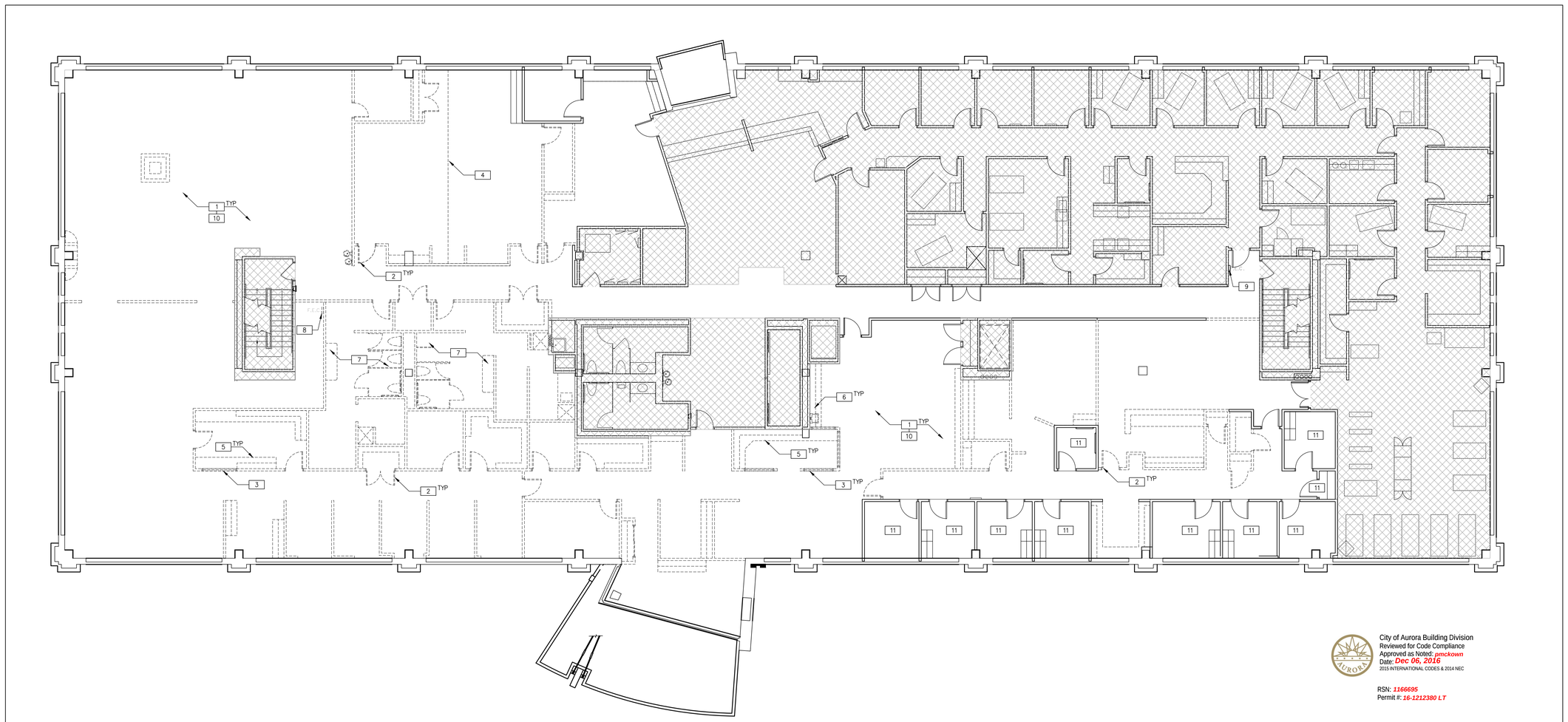

City of Aurora Building Division
Reviewed for Code Compliance
Approved as Noted: *pmckown*
Date: *Dec 06, 2016*
2015 INTERNATIONAL CODES & 2014 NEC

RSN: *1166695*
Permit #: *16-1212380 LT*

1/8"=1'-0"
0 4' 8' 16' 32'

DEMOLITION PLAN
SCALE: 1/8"=1'-0"

1 N

DEMOLITION PLAN NOTES

1. REMOVE PARTITIONS AND RELATED ELECTRICAL OUTLETS AS INDICATED. TERMINATE ELECTRICAL LINES BACK TO POINT OF ORIGIN.
2. REMOVE DOOR ASSEMBLY. SAVE FOR POSSIBLE RELOCATION OR RETURN TO BUILDING STOCK.
3. REMOVE INTERIOR GLAZING.
4. REMOVE FOLDING PARTITION WALL & ASSOCIATED HARDWARE.
5. REMOVE EXISTING MILLWORK.
6. REMOVE EXISTING MILLWORK & SINK. CAP PLUMBING AS REQUIRED.
7. REMOVE PLUMBING FIXTURES. CAP PLUMBING AS REQUIRED.
8. REMOVE EXISTING FIRE EXTINGUISHER & CABINET. SAVE FOR RELOCATION.
9. EXISTING FIRE EXTINGUISHER CABINET WITH EXTINGUISHER TO REMAIN.
10. REMOVE ALL WALL AND FLOOR FINISHES THROUGHOUT. PREP FOR NEW FINISHES PER FINISH PLAN.
11. EXISTING FINISHES TO REMAIN.

SEE SHEET A0.1 & A0.2 FOR GENERAL NOTES

LEGEND

INDICATES AREA NOT IN CONTRACT (N.I.C.)

WALL LEGEND

EXISTING CONSTRUCTION TO REMAIN

EXISTING CONSTRUCTION TO BE REMOVED

THESE DRAWINGS AND SPECIFICATIONS ARE THE PROPERTY AND COPYRIGHT OF WARE MALCOMB AND SHALL NOT BE USED ON ANY OTHER WORK EXCEPT BY AGREEMENT WITH WARE MALCOMB. WRITTEN DIMENSIONS SHALL TAKE PRECEDENCE OVER SCALED DIMENSIONS AND SHALL BE VERIFIED ON THE JOB SITE. ANY DISCREPANCY SHALL BE BROUGHT TO THE NOTICE OF WARE MALCOMB PRIOR TO THE COMMENCEMENT OF ANY WORK.

WARE MALCOMB
Leading Design for Commercial Real Estate

architecture
planning
interiors
graphics
civil engineering

1600 champa st.
suite 350
denver, colorado 80202
p 720.883.2626

MICHAEL CHAIKEN 35619 REGISTERED ARCHITECT NOV 14 2016

2ND FLOOR WHITE BOX
1444 SOUTH POTOMAC
AURORA, COLORADO

DEMOLITION PLAN

DATE	REMARKS
11.14.16	BLDG. DEPT SUBMITTAL

PA / PM:	A. HUFF
DRAWN BY:	AKN
JOB NO.:	DEN16-6168-00

SHEET
AD.1

W:\DEN\16\6168\00\Architectural\Cad\D1\6168_AD1.dwg

Mon, 14 Nov 2016

CAUTION: IF THIS SHEET IS NOT 30"x42" IT IS A REDUCED PRINT

City of Aurora Building Division
Reviewed for Code Compliance
Approved as Noted: pmckown
Date: Dec 06, 2016
2015 INTERNATIONAL CODES & 2014 NEC

RSN: 1166695
Permit #: 16-1212380 LT

1/8"=1'-0"
0 4' 8' 16' 32'

DEMOLITION CEILING PLAN

SCALE: 1/8"=1'-0"

1 N

ALTERNATES

A EXISTING GRID TO REMAIN

DEMOLITION RCP NOTES

1 THE CEILING/LIGHTING IN THIS ROOM/AREA IS EXISTING TO REMAIN.

2 REMOVE ALL EXISTING CEILING GRID & TILES THROUGHOUT. CLEAN FIXTURES AS REQUIRED FOR "LIKE NEW" CONDITION.

3 REMOVE EXISTING GYP. BOARD CEILING IN THIS ROOM.

4 HEADER EXISTING TO REMAIN. PATCH AND REPAIR AS NECESSARY.

SEE SHEET A0.1 & A0.2 FOR GENERAL NOTES

EXISTING SUPPLY/RETURN AIR GRILL TO REMAIN

EXISTING SUPPLY/RETURN AIR GRILL TO BE REMOVED

LEGEND

INDICATES AREA NOT IN CONTRACT (N.I.C.)

CEILING LEGEND

EXISTING 2'x4' SUSPENDED CEILING GRID & TILES TO REMAIN

EXISTING SUSPENDED CEILING GRID & TILES TO BE REMOVED

EXISTING 2'x2' SUSPENDED CEILING GRID & TILES TO BE REMOVED

EXISTING GYPSUM BOARD CEILING TO REMAIN

EXISTING GYPSUM BOARD CEILING TO BE REMOVED

EXISTING 2'x4' FLUORESCENT LIGHT FIXTURE WITH PARABOLIC LENS & ELECTRIC BALLAST.

EXISTING 2'x2' FLUORESCENT LIGHT FIXTURE WITH PARABOLIC LENS & ELECTRIC BALLAST.

EXISTING 2'x2' FLUORESCENT LIGHT FIXTURE WITH PARABOLIC LENS & ELECTRIC BALLAST TO BE REMOVED.

THESE DRAWINGS AND SPECIFICATIONS ARE THE PROPERTY AND COPYRIGHT OF WARE MALCOMB AND SHALL NOT BE USED ON ANY OTHER WORK EXCEPT BY AGREEMENT WITH WARE MALCOMB. WRITTEN DIMENSIONS SHALL TAKE PRECEDENCE OVER SCALED DIMENSIONS AND SHALL BE VERIFIED ON THE JOB SITE. ANY DISCREPANCY SHALL BE BROUGHT TO THE NOTICE OF WARE MALCOMB PRIOR TO THE COMMENCEMENT OF ANY WORK.

WARE MALCOMB
Leading Design for Commercial Real Estate

architecture
planning
interiors
graphics
civil engineering

1600 champa st.
suite 350
denver, colorado 80202
p 720.488.2626

NATHAN CHAIKEN
306199
LICENSED ARCHITECT
NOV 14 2016

2ND FLOOR WHITE BOX

1444 SOUTH POTOMAC

AURORA, COLORADO

DEMOLITION CEILING PLAN

DATE	REMARKS	DATE	REMARKS
11.14.16	BLDG. DEPT SUBMITTAL		

PA / PM:	A. HUFF
DRAWN BY:	AKN
JOB NO.:	DEN16-6168-00

SHEET

AD.2

Mon, 14 Nov 2016

W:\DEN\16\6168\00\Architectural\Cad\CD\6168_AD2.dwg

CAUTION: IF THIS SHEET IS NOT 30"x42" IT IS A REDUCED PRINT

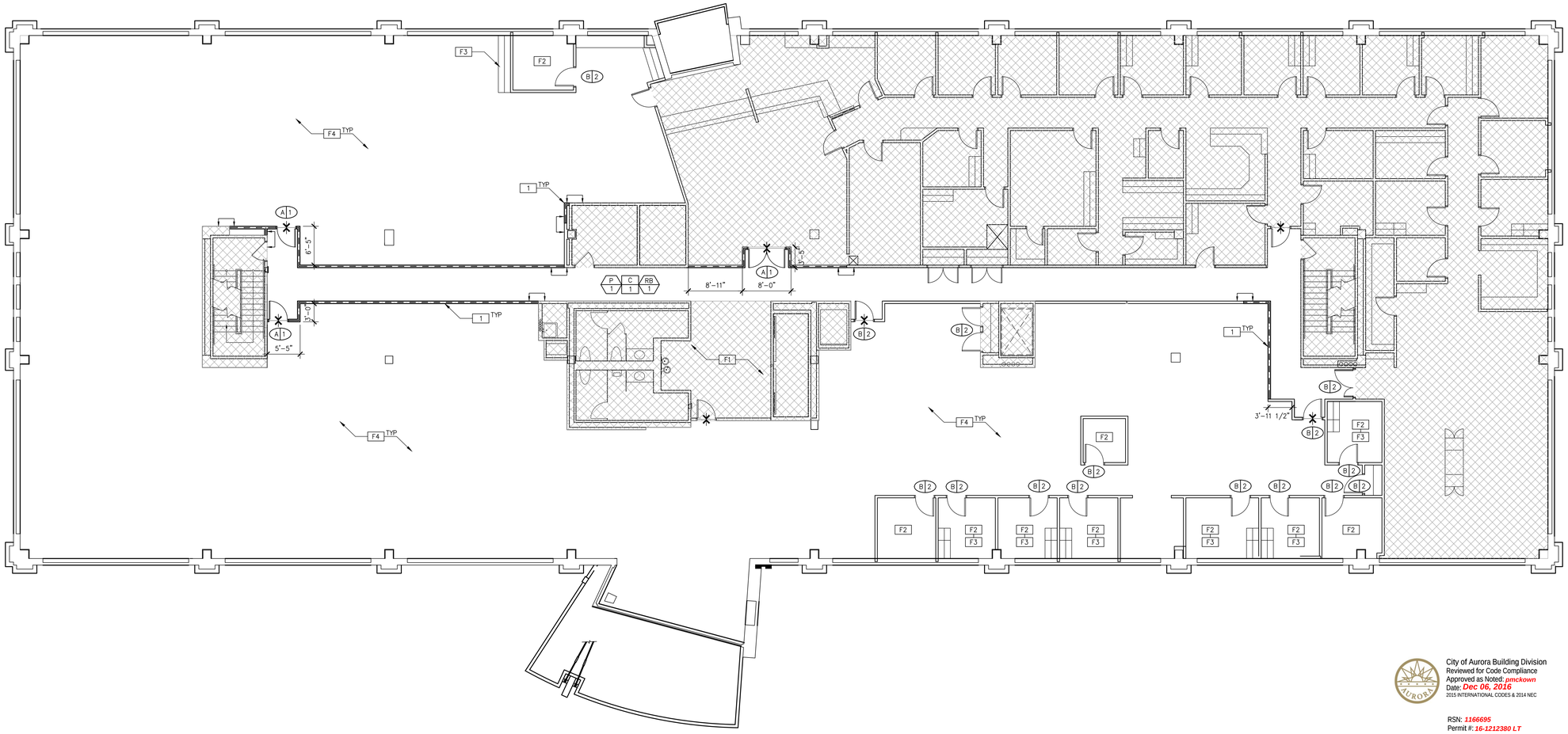

1/8"=1'-0"

0 4' 8' 16' 32'

FLOOR AND FINISH PLAN

SCALE: 1/8"=1'-0"

1 N

City of Aurora Building Division
Reviewed for Code Compliance
Approved as Noted: *pmckown*
Date: *Dec 06, 2016*
2015 INTERNATIONAL CODES & 2014 NEC

RSN: *1166695*
Permit #: *16-1212380 LT*

DOOR SCHEDULE

DOOR & FRAME:

(X) SUITE STANDARD DOORS ARE AND SHALL BE 1-3/4" THICK x 3'-0" WIDE x 8'-0" HIGH, SOLID CORE WOOD, WHITE MAPLE VENEER, STAINED CLEAR, 20 MINUTE FIRE-RATED, U.O.N.. ALL DOORS TO BE PRE-MACHINED FOR CYLINDRICAL HARDWARE AND FREE FROM DAMAGE AND IRREGULARITIES. FRAMES SHALL BE FIRE-RATED METAL PRIMED READY TO RECEIVE SEMI-GLOSS PAINT FINISH TO MATCH (RB-1). MANUFACTURER: EGGERS INDUSTRIES

A PROVIDE AND INSTALL NEW DOOR AND FRAME ASSEMBLY TO MATCH SUITE STANDARD LISTED ABOVE.

B EXISTING DOOR AND FRAME ASSEMBLY TO REMAIN.

HARDWARE:

(X) DOOR HARDWARE SHALL BE AN ACCESSIBLE LEVER STYLE. HARDWARE TO BE FALCON, GRADE II "B" SERIES, "DANE" LATCHING HARDWARE, #626 SATIN CHROME FINISH". ALL RATED DOORS TO INCLUDE CLOSER AND SMOKE SEALS.

1 PROVIDE AND INSTALL NEW OFFICE/ENTRANCE FUNCTION LOCK SET HARDWARE SET AND WALL MOUNTED DOOR STOP TO MATCH SPECIFICATION LISTED ABOVE.

2 EXISTING DOOR HARDWARE TO REMAIN.

FLOOR NOTES

1 NEW FULL HEIGHT WALL TO BE INSULATED WITH R-11, UNFACED FIBERGLASS INSULATION.

FINISH NOTES

F1 PROVIDE NEW WOOD BASE BOARDS IN ELEVATOR LOBBY TO MATCH EXISTING.

F2 EXISTING FINISHES TO REMAIN IN THIS ROOM.

F3 EXISTING MILLWORK AND SINK TO REMAIN, PATCH AND REPAIR CABINETRY FOR "LIKE NEW" CONDITION.

F4 ALL WALLS TO BE PRIMED AND READY FOR FUTURE TENANT'S SELECTED WALL COLOR.

GENERAL NOTES:

11. INSTALLATION LEVELS OF GYPSUM BOARD FINISHING AS FOLLOWS:
 11.1. LEVEL 1 FINISH: WHEN ABOVE FINISHED CEILINGS AND CONCEALED FROM VIEW.
 11.2. LEVEL 2 FINISH: AS A SUBSTRATE FOR TILE.
 11.3. LEVEL 3 FINISH: WHEN SCHEDULED TO RECEIVE A HEAVY OR MEDIUM TEXTURED FINISH.
 11.4. LEVEL 4 FINISH: IN OFFICES AND OTHER AREAS THAT RECEIVE LOWER PUBLIC TRAFFIC AND VISIBILITY.
 11.5. LEVEL 5 FINISH: FOR ALL WALLS AND CEILINGS TO RECEIVE A PAINTED FINISH, LIGHTLY TEXTURED FINISH.
12. CORRIDOR TO RECEIVE PAINT (P-1), RUBBER BASE (RB-1) AND CARPET (C-1), U.O.N.
13. CORRIDOR WALLS TO RECEIVE (2) COATS EGGSHELL PAINT, U.O.N.
14. PATCH WALLCOVERING AT AREAS OF CONSTRUCTION AS NEEDED.
15. CONCRETE FLOOR TO BE PREPPED FOR FUTURE TENANT FLOORING TO BE INSTALLED.
16. AT O.C.C SUITE – PATCH FLOORING AND PAINT WHERE REQUIRED DUE TO DEMOLITION OF WALLS, ETC.

GENERAL NOTES:

SEE SHEET A0.1 & A0.2 FOR ADDITIONAL GENERAL NOTES

1. FOR METAL STUD SIZES AND SPACING SEE LIMITING WALL HEIGHT TABLE L/240
2. ALL WALL STUDS TO BE 3-5/8", U.O.N.
3. SEE KEYNOTE INFORMATION FOR ANY REQUIRED INSULATION.
4. CONTRACTOR SHALL PROVIDE RECORD DOCUMENTS AND PROVIDE SAID DOCUMENTATION TO TENANT CONSTRUCTION COORDINATOR OR ARCHITECT UPON COMPLETION.
5. CONTRACTOR TO FIELD VERIFY EXISTING CONDITIONS (IF ANY) AND NOTIFY ARCHITECT OF ANY DISCREPANCIES.
6. ALL DRYWALL CORNERS AND COLUMN EDGES TO BE FINISHED WITH CORNER "L" BEAD. ALL EXPOSED EDGES TO BE FINISHED WITH METAL TRIM.
7. DIMENSIONS OF COLUMN FURRING IN A COMMON AREA ARE TO BE EQUAL DIMENSIONS WITH EDGES ALIGNED, U.O.N.
8. INTERIOR GYPSUM BOARD WALL SHALL CONFORM TO **ICC REPORT ESR-1338.**
9. PROVIDE APPROPRIATE SEALER FOR ALL NEW FINISHES PER MANUFACTURER'S RECOMMENDATION.
10. PROTECT FINISHES FROM MARS, MARKS, INDENTATIONS, AND OTHER DAMAGE FROM CONSTRUCTION OPERATIONS AND PLACEMENT OF EQUIPMENT AND FIXTURES DURING REMAINDER OF CONSTRUCTION PERIOD. USE PROTECTION METHODS RECOMMENDED IN WRITING BY MANUFACTURER.

LEGENDS

INDICATES AREA NOT IN CONTRACT (N.I.C.)

WALL LEGEND

EXISTING PARTITION

2D / A4.1 FULL HEIGHT NON-RATED PARTITION

NOTE: SEE METAL WALL STUD TABLE ON SHEET A4.1 TO SELECT APPROPRIATE WALL STUD SIZE FOR WALL HEIGHT.

SYMBOLS LEGEND

INDICATES LINE OF FLOOR TRANSITION

FINISH LEGEND

WALL FINISHES

P 1 — ITEM: PAINT – TYPICAL THROUGHOUT, U.O.N.; MFR: T.B.D.; COLOR/NO: T.B.D.; FINISH: EGGSHELL.

FLOOR FINISHES

C 1 — ITEM: CARPET TILE; MFR: T.B.D.; STYLE: T.B.D.; COLOR/NO: T.B.D.; INSTALLATION: GLUE-DOWN

RB 1 — ITEM: RUBBER BASE; MFR: JOHNSONITE; COLOR/NO: T.B.D.; SIZE: 4"; STYLE: STRAIGHT @ CARPET / COVED @ RESILIENT FLOORING

THESE DRAWINGS AND SPECIFICATIONS ARE THE PROPERTY AND COPYRIGHT OF WARE MALCOMB AND SHALL NOT BE USED ON ANY OTHER WORK EXCEPT BY AGREEMENT WITH WARE MALCOMB. WRITTEN DIMENSIONS SHALL TAKE PRECEDENCE OVER SCALED DIMENSIONS AND SHALL BE VERIFIED ON THE JOB SITE. ANY DISCREPANCY SHALL BE BROUGHT TO THE NOTICE OF WARE MALCOMB PRIOR TO THE COMMENCEMENT OF ANY WORK.

WARE MALCOMB
Leading Design for Commercial Real Estate

architecture
planning
interiors
graphics
civil engineering

1600 champa st.
suite 350
denver, colorado 80202
p 720.883.3636

MICHAEL CHAIKEN 306199 REGISTERED ARCHITECT NOV 14 2016

2ND FLOOR WHITE BOX

1444 SOUTH POTOMAC

AURORA, COLORADO

FLOOR AND FINISH PLAN

DATE	REMARKS
DATE: 11.14.16	BLDG. DEPT SUBMITTAL

PA / PM:	A. HUFF
DRAWN BY:	AKN
JOB NO.:	DEN16-6168-00

SHEET

A2.1

W:\DEN\16\6168\00\Architectural\Cad\CD\6168_A21.dwg

Mon, 14 Nov 2016

CAUTION: IF THIS SHEET IS NOT 30"x42" IT IS A REDUCED PRINT

City of Aurora Building Division
Reviewed for Code Compliance
Approved as Noted: pmckown
Date: Dec 06, 2016
2015 INTERNATIONAL CODES & 2014 NEC

RSN: 1166695
Permit #: 16-1212380 LT

1/8"=1'-0"
0 4' 8' 16' 32'

REFLECTED CEILING PLAN

SCALE: 1/8"=1'-0"

1 N

REFLECTED CEILING NOTES

1. NEW CEILING TILE GRID LOCATION AS INDICATED ON PLAN.
2. TYPICAL INSTALLATION OF LIGHT SWITCHES AND T-STATS THROUGHOUT, U.O.N., SEE 15 / A4.1
3. CEILING GRID TO MATCH EXISTING HEIGHT.

SEE SHEET A0.1 & A0.2 FOR GENERAL NOTES

LEGEND

- INDICATES AREA NOT IN CONTRACT (N.I.C.)
- SUSPENDED CEILING SYSTEM THROUGHOUT TO BE ARMSTRONG 2'x4' CORTEGA "SECOND LOOK II" #2776 WHITE TILE WITH ANGLED TEGULAR EDGE, WITH 9/16" SUPRAFINE GRID, SEE 10 / A4.1 THRU 14 / A4.1
- EXISTING 2'x4' SUSPENDED CEILING GRID & TILES TO REMAIN
- EXISTING 2'x4' FLUORESCENT LIGHT FIXTURE WITH PARABOLIC LENS & ELECTRIC BALLAST.
- EXISTING 2'x2' FLUORESCENT LIGHT FIXTURE WITH PARABOLIC LENS & ELECTRIC BALLAST.
- NEW 2'x4' FLUORESCENT LIGHT FIXTURE WITH PRISMATIC LENS & ELECTRIC BALLAST.
- NEW SUPPLY AIR GRILL. REFER TO MECHANICAL DRAWINGS.
- NEW RETURN AIR GRILL. REFER TO MECHANICAL DRAWINGS.

THESE DRAWINGS AND SPECIFICATIONS ARE THE PROPERTY AND COPYRIGHT OF WARE MALCOMB AND SHALL NOT BE USED ON ANY OTHER WORK EXCEPT BY AGREEMENT WITH WARE MALCOMB. WRITTEN DIMENSIONS SHALL TAKE PRECEDENCE OVER SCALED DIMENSIONS AND SHALL BE VERIFIED ON THE JOB SITE. ANY DISCREPANCY SHALL BE BROUGHT TO THE NOTICE OF WARE MALCOMB PRIOR TO THE COMMENCEMENT OF ANY WORK.

WARE MALCOMB
Leading Design for Commercial Real Estate

architecture
planning
interiors
graphics
civil engineering

1600 champa st.
suite 350
denver, colorado 80202
p 720.488.2626

2ND FLOOR WHITE BOX

1444 SOUTH POTOMAC

AURORA, COLORADO

REFLECTED CEILING PLAN

DATE	REMARKS	DATE	REMARKS
11.14.16	BLDG. DEPT SUBMITTAL		

PA / PM:	A. HUFF
DRAWN BY:	AKN
JOB NO.:	DEN16-6168-00

SHEET

A3.1

Mon, 14 Nov 2016

W:\DEN\16\6168\00\Architectural\Cad\CD\6168_A31.dwg

21

16

22

17

23

18

24

19

25

20

MEMBER DEPTH:
(EXAMPLE: 6" = 600 X 1/100 INCHES) ALL MEMEBER DEPTHS ARE TAKEN IN 1/100 INCHES. FOR ALL "T" SECTIONS MEMBER DEPTH IS THE INSIDE DIMENSION.

FLANGE WIDTH:
(EXAMPLE: 1 5/8" = 1.625" ~ 162 X 1/100 INCHES) ALL FLANGE WIDTHS ARE TAKEN IN 1/100 INCHES.

(600) (S) (162)-(54)

STYLE:
(EXAMPLE: STUD OR JOIST SECTION = S) THE FOUR ALPHA CHARACTERS UTILIZED BY THE DESIGNATOR SYSTEM ARE:

S = STUD OR JOIST, T = TRACK, U = CHANNEL, F = FURRING

MATERIAL THICKNESS:
(EXAMPLE: 0.054 IN. = 54 MILS; 1 MIL =1/1000 IN.) MATERIAL THICKNESS IS THE MINIMUM BASE METAL THICKNESS IN MILS. MINIMUM BASE METAL THICKNESS REPRESENTS 95% OF THE DESIGN THICKNESS.

CEILING SPAN TABLE NOTES:

1. VALUES ARE FOR SINGLE SPANS.
2. ALLOWABLE CEILING SPAN CALCULATIONS BASED ON 33KSI YIELD STRENGTH STEEL.
3. FOR FULLY BRACED CEILINGS, USE MID-SPAN BRACED VALUES.
4. END BEARING LENGTH = 1" MINIMUM.

		4 PSF LATERAL SUPPORT OF COMPRESSION FLANGE					
		UNSUPPORTED JOIST SPACING (IN.) O.C.			MID-SPAN JOIST SPACING (IN.) O.C.		
SECTION:	(MIL)	12"	16"	24"	12"	16"	24"
250S137	33	11'-9"	10'-10"	9'-9"	14'-11"	13'-6"	11'-10"
250S137	43	13'-2"	12'-1"	10'-9"	16'-2"	14'-8"	12'-10"
250S162	33	13'-5"	12'-5"	11'-1"	15'-8"	14'-2"	12'-5"
250S162	43	14'-11"	13'-9"	12'-3"	17'-0"	15'-5"	13'-6"
350S137	33	12'-9"	11'-9"	10'-6"	18'-1"	16'-9"	15'-0"
350S137	43	14'-1"	13'-0"	11'-7"	19'-10"	18'-4"	16'-4"
350S162	33	14'-6"	13'-5"	12'-0"	20'-3"	18'-5"	16'-1"
350S162	43	16'-0"	14'-9"	13'-2"	22'-0"	20'-0"	17'-6"
362S137	33	12'-10"	11'-11"	10'-7"	18'-3"	16'-11"	15'-2"
362S137	43	14'-3"	13'-1"	11'-8"	20'-0"	18'-6"	16'-6"
362S162	33	14'-8"	13'-6"	12'-1"	20'-9"	18'-11"	16'-6"
362S162	43	16'-1"	14'-10"	13'-3"	22'-7"	20'-7"	17'-11"
400S137	33	13'-2"	12'-2"	10'-11"	18'-9"	17'-4"	15'-6"
400S137	43	14'-7"	13'-5"	12'-0"	20'-6"	18'-11"	16'-11"
400S162	33	15'-0"	13'-10"	12'-5"	21'-4"	19'-10"	17'-9"
400S162	43	16'-6"	15'-3"	13'-7"	23'-4"	21'-7"	19'-4"
550S137	33	14'-6"	13'-5"	12'-0"	20'-10"	19'-4"	17'-5"
550S137	43	15'-10"	14'-7"	13'-1"	22'-6"	20'-10"	18'-9"
550S162	33	16'-6"	15'-3"	13'-8"	23'-9"	22'-0"	19'-10"
550S162	43	17'-11"	16'-7"	14'-10"	25'-7"	23'-9"	21'-4"
600S137	33	14'-10"	13'-9"	12'-4"	21'-4"	19'-10"	17'-10"
600S137	43	16'-2"	14'-11"	13'-5"	23'-1"	21'-4"	19'-2"
600S162	33	16'-10"	15'-8"	14'-1"	24'-4"	22'-7"	20'-4"
600S162	43	18'-4"	17'-0"	15'-3"	26'-3"	24'-4"	21'-10"

NOTE: ALL STUD INFORMATION IS BASED ON: CEMCO ICC ES ESR-3016

ALLOWABLE CEILING SPANS - L/240 (12)

SCALE: NONE ICEMT-Allowable_span-L240-CEMCO

INTERIOR GYP. BD. WALLS SHALL CONFORM TO ICC REPORT ESR-1338:
- MAX. METAL STUD SPACING SHALL BE 24" O.C.
- MIN. FASTENER SIZE SHALL BE No. 6, 1-1/4" SCREWS
- MAX. FASTENER SPACING SHALL BE 12" FIELD & 8" AT EDGES.

NOTES FOR ALL WALLS:
- SEE METAL STUD CHART FOR GAUGE.
- SEE FLOOR/PARTITION PLAN AND/OR GENERAL NOTES SHEET FOR ANY REQUIRED NSULATION.
- ALL WALL STUDS TO BE 3-5/8", U.O.N.
- ALL RESTROOM WALL STUDS TO BE 6" AND FULLY INSULATED, U.O.N.

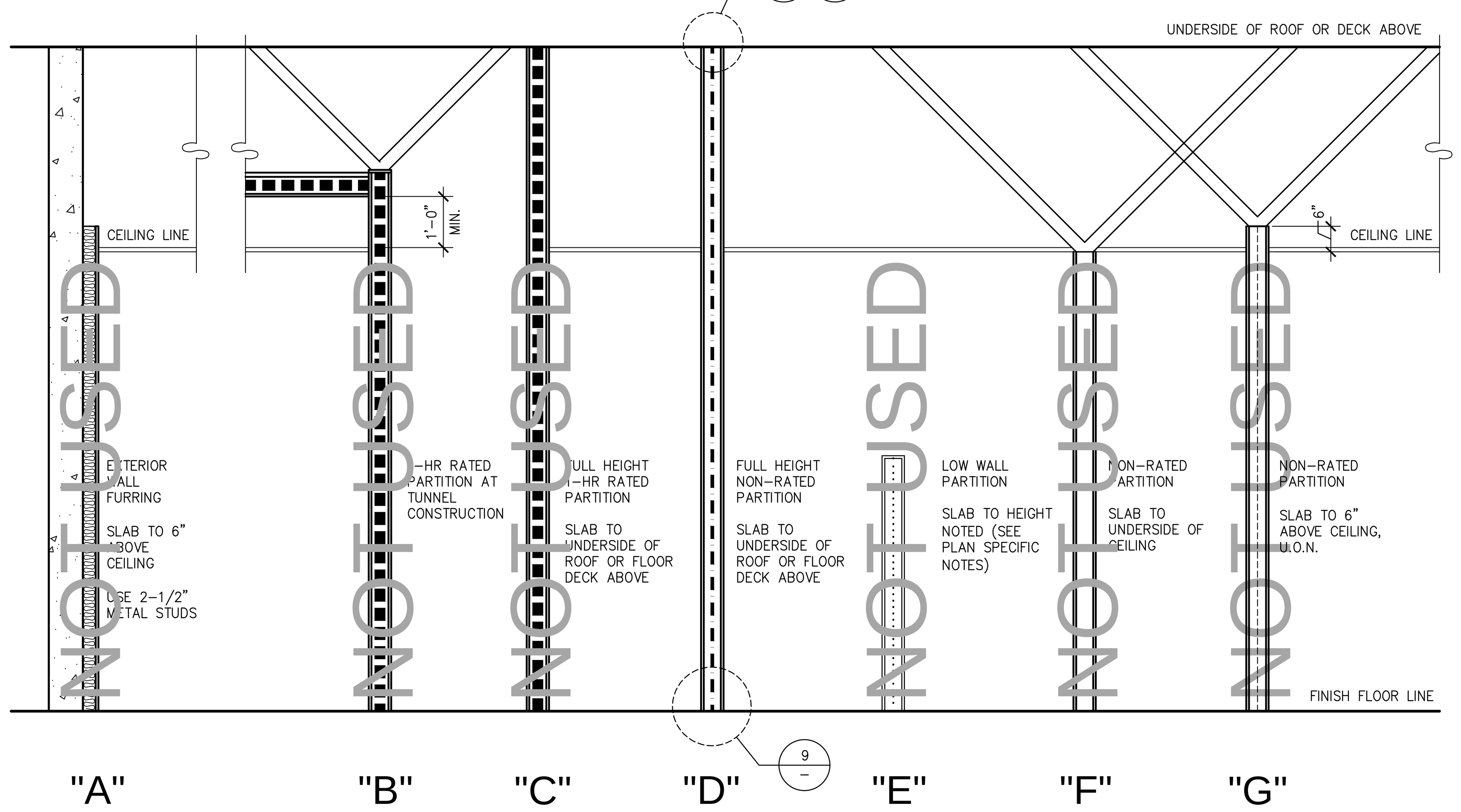

WALL TYPE SCHEDULE (2)

SCALE: 1/2"=1'-0" IWAMT-Wall_type_schedule-02

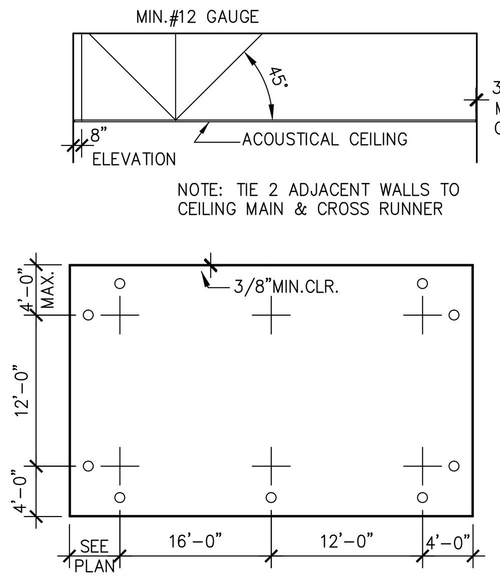

CEILING GRID USES #12 GUAGE SPLAY WIRE HANGERS AT 45 DEG. AND 90 DEG. TO EACH OTHER (4 WIRES) BEGINNING 48" FROM STARTING POINT OF GRID AND TILE LAYOUT AND IN BOTH DIRECTIONS AT 12'-0" THEREAFTER ALL CLEARANCES. TIES TO WALL, ETC.TO CONFORM TO STATE & LOCAL CODES.

SUSPENDED CEILING GRID (13)

SCALE: N.T.S. ICEAC-Susp_grid-01

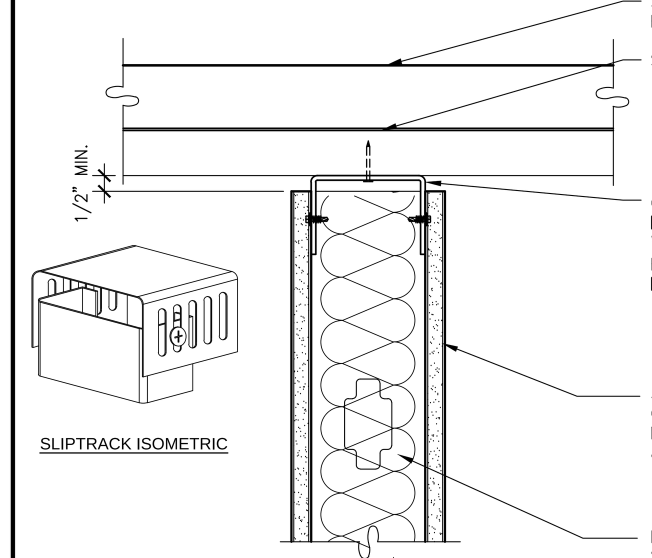

SEE PLANS FOR ROOF OR FLOOR COMPOSITION

STEEL DECK

CEMCO SLOTTED TRACK (CST) **ICC-ESR-2012** WITH POWER-DRIVEN FASTENERS AT 16"O.C. MAX. **ICC-ESR-1752** LARR # 22668

5/8" GYP. BD. EACH SIDE OVER METAL STUDS, SEE METAL STUD TABLE FOR SIZE & SPACING LARR # 25889

INSULATION WHERE OCCURS, SEE WALL TYPE SCHEDULE

FULL HEIGHT NON-RATED WALL (8)

SCALE: 3"= 1'-0" IWAMT-Fht_hd_md_per-01

LATERAL BRACING: 4-12 GA. WIRES SECURED TO MAIN RUNNER WITHIN 2" OF CROSS RUNNER INTERSECTION AND SPLAYED 90° FROM EACH OTHER AT ANGLE NOT TO EXCEED 45° FROM THE PLANE OF THE CEILING TYP. @ 12'-0" EA. WAY BEGINNING 6'-0" MAX. FROM WALL.

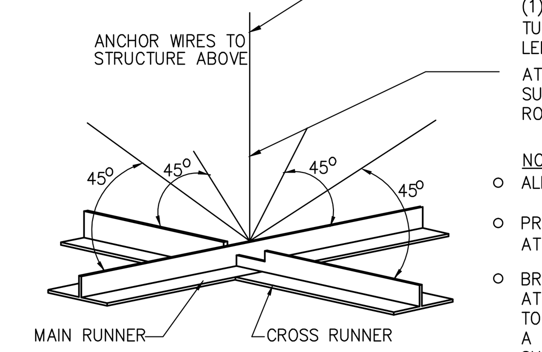

AT SUSPENDED CEILING: VERTICAL HANGER WIRE AT 4'-0" O.C. W/ (2) 1 1/2" x 9" GA. STAPLES @ LOOP & (1) ACROSS LAP. 3 FULL TURNS MINIMUM WITHIN 3" LENGTH

AT OPEN GRID: VERTICAL SUSPENSION WITH THREADED ROD PER OTHER DETAILS.

NOTE:
- ALL WIRES 12 GA.
- PROVIDE 6" CLEARANCE AT ALL PIPES & DUCTS, ETC.
- BRACING WIRES MUST BE ATTACHED TO THE GRID AND TO THE STRUCTURE IN SUCH A MANNER THAT THEY CAN SUPPORT A DESIGN LOAD OF NOT LESS THAN 200 POUNDS OR THE ACTUAL LOADS, WHICHEVER IS GREATER, WITH A SAFETY FACTOR OF 2.

SUSPENDED ACOUSTICAL CEILING (14)

SCALE: N.T.S. ICEAC-Acoustical_susp-02

NOTES:
1. PROVIDE ACOUSTICAL SEALANT (OR FIRE CAULKING AT FIRE-RESISTANCE RATED WALLS) AT BOTH SIDES OF WALL BOTTOM.
2. REFERENCE **UL# BW-S-0001** FOR FIRE-RESISTANCE RATED WALL ASSEMBLIES.
3. ALL JOINTS OR PENETRATIONS IN FIRE-RESISTANCE RATED WALLS ARE REQUIRED TO BE PROTECTED WITH A UL LISTED FIRE STOP SYSTEM.

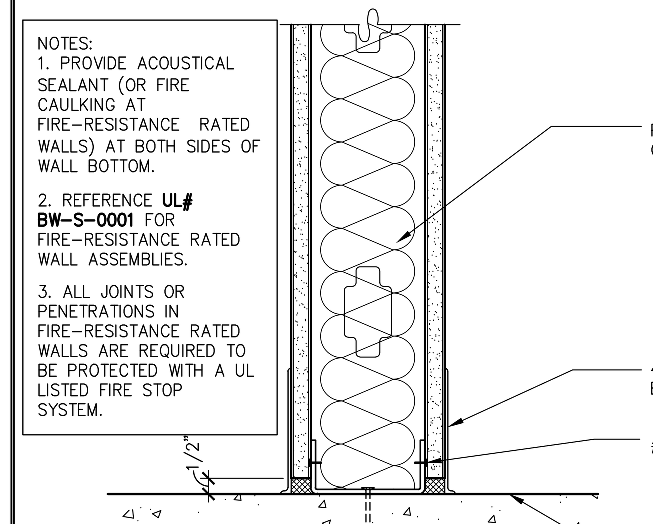

PARTITION TYPE AS INDICATED ON PLAN

4" RESILIENT BASE @ GYP. BD. WALLS U.O.N.

#10 SCREWS (TYP.)

FINISH FLOOR

WALL BASE (9)

SCALE: 3"=1'-0" IWAMT-Base_typ-01

MEMBER DEPTH:
(EXAMPLE: 6" = 600 X 1/100 INCHES) ALL MEMEBER DEPTHS ARE TAKEN IN 1/100 INCHES. FOR ALL "T" SECTIONS MEMBER DEPTH IS THE INSIDE DIMENSION.

FLANGE WIDTH:
(EXAMPLE: 1 5/8" = 1.625" ~ 162 X 1/100 INCHES) ALL FLANGE WIDTHS ARE TAKEN IN 1/100 INCHES.

(600) (S) (162)-(54)

STYLE:
(EXAMPLE: STUD OR JOIST SECTION = S) THE FOUR ALPHA CHARACTERS UTILIZED BY THE DESIGNATOR SYSTEM ARE:

S = STUD OR JOIST, T = TRACK, U = CHANNEL, F = FURRING

MATERIAL THICKNESS:
(EXAMPLE: 0.054 IN. = 54 MILS; 1 MIL =1/1000 IN.) MATERIAL THICKNESS IS THE MINIMUM BASE METAL THICKNESS IN MILS. MINIMUM BASE METAL THICKNESS REPRESENTS 95% OF THE DESIGN THICKNESS.

INTERIOR NON-STRUCTURAL NON-COMPOSITE:

USE FOR FURRING PURPOSES ONLY, U.O.N.

(S) STUD MEMBER	SPACING (IN.) O.C.	5 PSF L/240
250S137-33	12"	13'-10"
250S137-33	16"	12'-2"
250S137-33	24"	11'-0"
250S137-43	12"	15'-0"
250S137-43	16"	13'-8"
250S137-43	24"	11'-11"
250S137-54 (50 KSI)	12"	16'-1"
250S137-54 (50 KSI)	16"	14'-7"
250S137-54 (50 KSI)	24"	12'-9"

(S) STUD MEMBER	SPACING (IN.) O.C.	5 PSF L/240
362S137-33	12"	18'-5"
362S137-33	16"	16'-9"
362S137-33	24"	14'-7"
362S137-43	12"	20'-0"
362S137-43	16"	18'-2"
362S137-43	24"	15'-11"
362S137-54 (50 KSI)	12"	21'-5"
362S137-54 (50 KSI)	16"	19'-6"
362S137-54 (50 KSI)	24"	17'-0"
362S137-68 (50 KSI)	12"	22'-11"
362S137-68 (50 KSI)	16"	20'-10"
362S137-68 (50 KSI)	24"	18'-2"
362S137-97 (50 KSI)	12"	25'-3"
362S137-97 (50 KSI)	16"	22'-11"
362S137-97 (50 KSI)	24"	20'-0"
400S137-33	12"	19'-11"
400S137-33	16"	18'-1"
400S137-33	24"	15'-9"
400S137-43	12"	21'-8"
400S137-43	16"	19'-8"
400S137-43	24"	17'-2"

(S) STUD MEMBER	SPACING (IN.) O.C.	5 PSF L/240
400S137-54 (50 KSI)	12"	23'-2"
400S137-54 (50 KSI)	16"	21'-1"
400S137-54 (50 KSI)	24"	18'-5"
400S137-68 (50 KSI)	12"	24'-9"
400S137-68 (50 KSI)	16"	22'-6"
400S137-68 (50 KSI)	24"	19'-8"
400S137-97 (50 KSI)	12"	27'-3"
400S137-97 (50 KSI)	16"	24'-9"
400S137-97 (50 KSI)	24"	21'-8"
600S137-33	12"	27'-3"
600S137-33	16"	24'-9"
600S137-33	24"	21'-8"
600S137-43	12"	29'-10"
600S137-43	16"	27'-2"
600S137-43	24"	23'-8"
600S137-54 (50 KSI)	12"	32'-0"
600S137-54 (50 KSI)	16"	29'-1"
600S137-54 (50 KSI)	24"	25'-5"
600S137-68 (50 KSI)	12"	34'-4"
600S137-68 (50 KSI)	16"	31'-2"
600S137-68 (50 KSI)	24"	27'-3"
600S137-97 (50 KSI)	12"	38'-0"
600S137-97 (50 KSI)	16"	34'-6"
600S137-97 (50 KSI)	24"	30'-2"
800S137-43	12"	37'-6"
800S137-43	16"	34'-1"
800S137-43	24"	29'-9"
800S137-54 (50 KSI)	12"	40'-4"
800S137-54 (50 KSI)	16"	36'-8"
800S137-54 (50 KSI)	24"	32'-0"
800S137-68 (50 KSI)	12"	43'-6"
800S137-68 (50 KSI)	16"	39'-6"
800S137-68 (50 KSI)	24"	34'-6"

NOTE: ALL STUD INFORMATION IS BASED ON: CEMCO ICC ES ESR-3016

LIMITING WALL HEIGHT TABLE-L/240 (4)

SCALE: NONE IWAMT-Height_table-L_240-CEMCO

City of Aurora Building Division
Reviewed for Code Compliance
Approved as Noted: *pmckown*
Date: *Dec 06, 2016*
2015 INTERNATIONAL CODES & 2014 NEC

RSN: *1166695*
Permit #: *16-1212380 LT*

NOTE:
PROVIDE METAL BLOCKING BETWEEN STUDS TO MOUNT LIGHT SWITCH/SENSOR & THERMOSTAT AT DIMENSION INDICATED

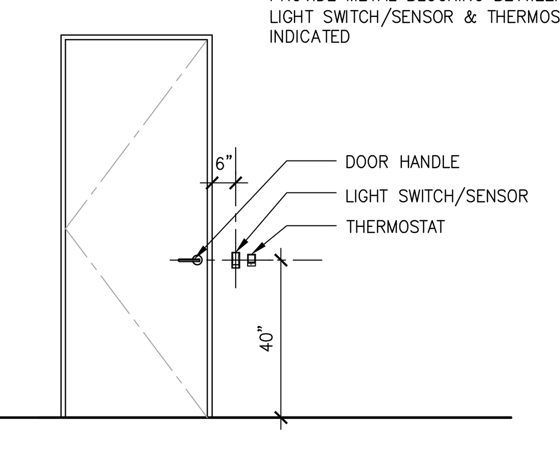

LT. SWITCH / T-STAT INSTALLATION (15)

SCALE: 3/8"=1'-0" IMIMI-Light_switch_T_stat-02

HEAVY-DUTY CEILING SYSTEMS

TWO (2) NO. 12 GAUGE WIRES MUST BE SECURED FROM LIGHT & MECHANICAL FIXTURES AT OPPOSING CORNERS ALONG THE FIXTURE'S DIAGONAL. WIRES MAY BE SLACK.

LATERAL FORCE BRACING MEMBERS MUST BE SPACED A MINIMUM OF 6" FROM ALL HORIZONTAL PIPING OR DUCT WORK THAT IS NOT PROVIDED WITH BRACING RESTRAINTS FOR HORIZ. FORCES. BRACING WIRES MUST BE ATTACHED TO THE GRID AND TO THE STRUCTURE IN SUCH A MANNER THAT THEY CAN SUPPORT A DESIGN LOAD OF NOT LESS THAN 200 POUNDS OR THE ACTUAL LOADS, WHICHEVER IS GREATER, WITH A SAFETY FACTOR OF 2.

WHEN HEAVY-DUTY CEILING SYSTEMS ARE USED, SUPPLEMENTAL HANGERS ARE NOT REQUIRED IF A 48" MODULAR HANGER PATTERN IS FOLLOWED.

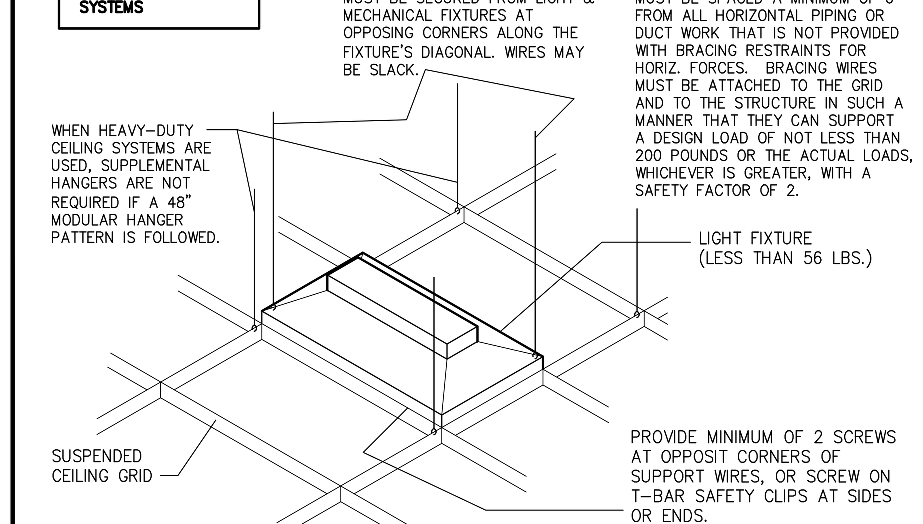

LIGHT FIXTURE (LESS THAN 56 LBS.)

SUSPENDED CEILING GRID

PROVIDE MINIMUM OF 2 SCREWS AT OPPOSIT CORNERS OF SUPPORT WIRES, OR SCREW ON T-BAR SAFETY CLIPS AT SIDES OR ENDS.

LIGHT FIXTURE @SUSPENDED CLNG (10)

SCALE: N.T.S. ICEAC-Susp_light_heavyduty-02

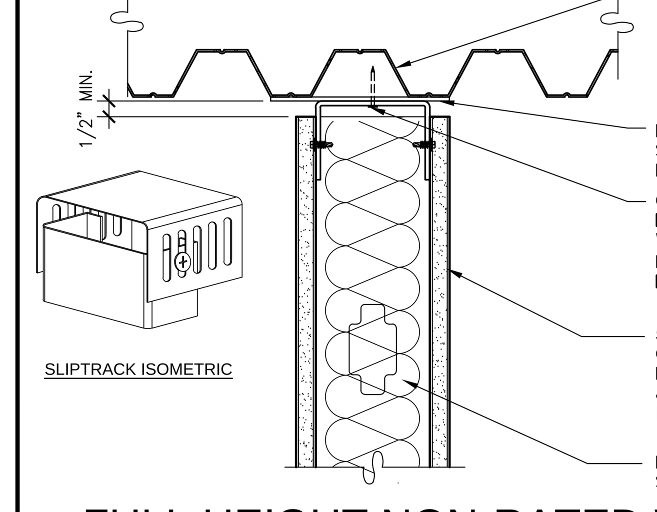

SEE PLANS FOR ROOF OR FLOOR COMPOSITION

STEEL DECK

MIN. 12" WIDE OVER 2 FLUTE SPAN 14 GA. GSM CONT. ENCLOSURE

CEMCO SLOTTED TRACK (CST) **ICC-ESR-2012** WITH POWER-DRIVEN FASTENERS AT 16"O.C. MAX. **ICC-ESR-1752**

5/8" GYP. BD. EACH SIDE OVER METAL STUDS, SEE METAL STUD TABLE FOR SIZE & SPACING LARR # 25889

INSULATION WHERE OCCURS, SEE WALL TYPE SCHEDULE

FULL HEIGHT NON-RATED WALL (5)

SCALE: 3"= 1'-0" IWAMT-Fht_hd_md_pll-01

THESE DRAWINGS AND SPECIFICATIONS ARE THE PROPERTY AND COPYRIGHT OF WARE MALCOMB AND SHALL NOT BE USED ON ANY OTHER WORK EXCEPT BY AGREEMENT WITH WARE MALCOMB. WRITTEN DIMENSIONS SHALL TAKE PRECEDENCE OVER SCALED DIMENSIONS AND SHALL BE VERIFIED ON THE JOB SITE. ANY DISCREPANCY SHALL BE BROUGHT TO THE NOTICE OF WARE MALCOMB PRIOR TO THE COMMENCEMENT OF ANY WORK.

WARE MALCOMB
Leading Design for Commercial Real Estate

architecture
planning
interiors
graphics
civil engineering

1600 champa st.
suite 350
denver. colorado 80202
p 720.488.2626

STATE OF COLORADO MATTHEW NATHAN CHAIKEN 306199 LICENSED ARCHITECT NOV 14 2016

2ND FLOOR WHITE BOX
1444 SOUTH POTOMAC
AURORA, COLORADO

DETAILS

DATE	REMARKS	DATE	REMARKS
11.14.16	BLDG. DEPT SUBMITTAL		

PA / PM:	A. HUFF
DRAWN BY:	AKN
JOB NO.:	DEN16-6168-00

SHEET
A4.1

Mon, 14 Nov 2016

W:\DEN\16\6168\00\Architectural\Cad\CD\6168_A41\6168_A41.dwg

CAUTION: IF THIS SHEET IS NOT 30 X42 IT IS A REDUCED PRINT

COMcheck Software Version 4.0.5.0

Interior Lighting Compliance Certificate

Project Information

Energy Code: 2015 IECC
Project Title: 2nd Floor White Box
Project Type: New Construction

Construction Site:
1444 S. Potomac
Aurora, CO 80012

Owner/Agent:

Designer/Contractor:
Nick Goulet
MV Consulting, Inc.
2828 N. Speer
Suite 210
Denver, CO 80211
303-325-3271

Additional Efficiency Package

Reduced interior lighting power. Requirements are implicitly enforced within interior lighting allowance calculations.

Allowed Interior Lighting Power

A Area Category	B Floor Area (ft2)	C Allowed Watts / ft2	D Allowed Watts (B X C)
1-Corridor (Common Space Types:Corridor/Transition <8 ft wide)	1197	0.59	706
		Total Allowed Watts =	706

Proposed Interior Lighting Power

A Fixture ID : Description / Lamp / Wattage Per Lamp / Ballast	B Lamps/ Fixture	C # of Fixtures	D Fixture Watt.	E (C X D)
1-Corridor (Common Space Types:Corridor/Transition <8 ft wide)				
Linear Fluorescent 1: Existing 2'x2 Troffer: 24" T8 17W: Electronic;	2	20	34	680
			Total Proposed Watts =	680

Interior Lighting PASSES: Design 4% better than code

Interior Lighting Compliance Statement

Compliance Statement: The proposed interior lighting design represented in this document is consistent with the building plans, specifications and other calculations submitted with this permit application. The proposed interior lighting systems have been designed to meet the 2015 IECC requirements in COMcheck Version 4.0.5.0 and to comply with any applicable mandatory requirements listed in the Inspection Checklist.

Nick Goulet — Name - Title
Nick Goulet — Signature
11-14-2016 — Date

Project Title: 2nd Floor White Box — Report date: 11/14/16
Data filename: j:\2016\2016-095-00\Admin\Schedules\1444 COMcheck.cck — Page 1 of 5

Service equipment shall be permanently and legibly marked to show the available fault current and date.
2014 NEC 110.24(A)(B).

Legibly identify each breaker or switch for it's use or purpose on the circuit directory in the panel/switchboard per 2014 NEC 408.4.

EXISTING PANEL H2A

11/17/2016 — 277 / 480 VOLT — 3 PHASE — 4 WIRE SERVICE — 42,000 AIC:
BUS RATING: 400A — MAIN: MLO — MOUNTING: SURFACE
LOCATION: — PROJECT: 1444 S. POTOMAC
COMMENTS: — JOB NO.: 2016-095-00

TYPE	NOTE	DESCRIPTION	BRKR	CCT	LOAD	Ø	LOAD	CCT	BRKR	DESCRIPTION	NOTE	TYPE
	1	LIGHTING NW	20/1	1	0	A	0	2	20/1	CORE LIGHTING	1	
	1	LIGHTING CONF.	20/1	3	0	B	0	4	20/1	SHELL BATHROOM	1	
	1	LIGHTING BATHROOMS	20/1	5	0	C	0	6	20/1	FTU-2-8	1	
	1	SPARE	20/1	7	0	A	0	8	20/1	FTU-2-9	1	
	1	SPARE	20/1	9	0	B	0	10	30/1	FTU2-10	1	
	1	SPARE	20/1	11	0	C	0	12	20/1	FTU-2-11	1	
	1	SPARE	20/1	13	0	A	0	14	20/1	FTU-2-12	1	
	1	FTU-2-1	30/1	15	0	B	0	16	30/1	FTU-2-5	1	
	1	FTU-2-2	30/1	17	0	C	0	18	30/1	FTU-2-6	1	
	1	SPARE	20/1	19	0	A	0	20	30/1	FTU-2-7	1	
	1	LIGHTING SE OFFICE	20/1	21	0	B	0	22	20/1	SPARE	1	
	1	LIGHTING ROOM 48	20/1	23	0	C	0	24	20/1	SPARE	1	
	1	LIGHTING SW OFFICE	20/1	25	0	A	0	26	30/1	FTU-2-18	1	
	1	LIGHTING SE CORRIDOR	20/1	27	0	B	0	28	30/1	FTU-2-2	1	
	2	LIGHTING MAIN CORRIDOR	20/1	29	0	C	0	30	30/1	FTU-2-3	1	
	1	LIGHTING S CENTER OFFICE	20/1	31	0	A	0	32	20/1	SPARE	1	
	1	LIGHTING WEST CORRIDOR	20/1	33	0	B	0	34	20/1	SPARE	1	
	1	LIGHTING NE	20/1	35	0	C	0	36	30/1	FTU-2-23	1	
	1	FTU-2-17	60/3	37	0	A	0	38	60/3	FTU-2-25	1	
	1	-----	---	39	0	B	0	40	---	-----	1	
	1	-----	---	41	0	C	0	42	---	-----	1	
	1	SPARE	60/3	43	0	A	0	44	100/3	X-RAY EQUIPMENT	1	
	1	-----	---	45	0	B	0	46	---	-----	1	
	1	-----	---	47	0	C	0	48	---	-----	1	
	1	FTU-2-26	60/3	49	0	A	0	50	60/3	FTU-2-22	1	
	1	-----	---	51	0	B	0	52	---	-----	1	
	1	-----	---	53	0	C	0	54	---	-----	1	

	CONNECTED VA			D.F.	DEMAND VA		
	A	B	C		A	B	C
CONTINUOUS / LIGHTING	0	0	0	1.25	0	0	0
RECEPT., (FIRST 10 KW)	0	0	0	1.00	0	0	0
RECEPT. (REMAINDER)	0	0	0	0.50	0	0	0
MOTORS	0	0	0	1.00	0	0	0
LARGEST MOTOR				1.25	0	0	0
KITCHEN	0	0	0	1.00	0	0	0
MISCELLANEOUS	0	0	0	1.00	0	0	0
TOTAL	0	0	0		0	0	0
TOTAL DEMAND VA					0	VA	
TOTAL DEMAND AMPS					0.0	AMPS	

THIS PANELS TOTAL LOAD INCLUDES THE FOLLOWING LOADS:
SUBFEED BRKR 1: 0 VA, 0.0 AMPS
SUBFEED BRKR 2: 0 VA, 0.0 AMPS
FEED THRU PANEL DESIGNATION:
0 VA, 0.0 AMPS

C = CONTINUOUS/LIGHTING — R = RECEPTACLE — M = MOTOR — K = KITCHEN — E = MISCELLANEOUS

NOTES:
1. ALL LOADS ARE EXISTING TO REMAIN UNLESS OTHERWISE NOTED.
2. OVERALL EXISTING LIGHTING LOAD HAS BEEN REDUCED.

LOAD SUMMARY

EXISTING LIGHTING LOAD:
(24) 34W 2'X2' FLUORESCENT TROFFER

LIGHTING LOAD RELOCATED:
(20) 34W 2'X2' FLUORESCENT TROFFER

LIGHTING LOAD DEMOLISHED:
(4) 34W 2'X2' FLUORESCENT TROFFER

TOTAL WATTAGE REMOVED: 136W

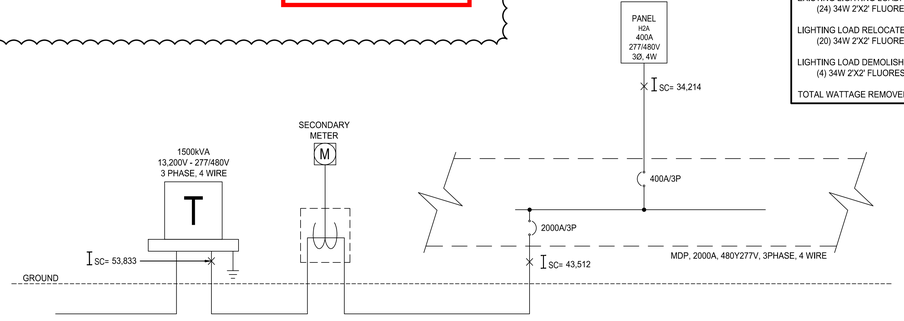

1 PARTIAL ONE-LINE DIAGRAM
SCALE: NONE

NOTE:
1. ALL ITEMS ARE EXISTING TO REMAIN UNLESS NOTED AND TO BE FIELD VERIFIED.
2. TOTAL LOAD ON EXISTING PANEL H2A HAS BEEN REDUCED.

ELECTRICAL CONSTRUCTION SPECIFICATION

1. THE CONTRACTOR SHALL PROVIDE ALL LABOR AND MATERIAL NECESSARY FOR A COMPLETE AND FUNCTIONING ELECTRICAL SYSTEM.
2. MATERIALS AND INSTALLATION SHALL COMPLY WITH CODES, LAWS AND ORDINANCES OF FEDERAL, STATE AND LOCAL GOVERNING BODIES HAVING JURISDICTION.
3. MATERIALS AND EQUIPMENT SHALL BE LISTED AND/OR LABELED BY U.L., ETL, CSA OR ANOTHER RECOGNIZED TESTING LAB.
4. THE CONTRACTOR SHALL SECURE AND PAY FOR ALL PERMITS, GOVERNMENTAL FEES, TAXES AND LICENSES NECESSARY FOR THE PROPER EXECUTION AND COMPLETION OF THE ELECTRICAL WORK.
5. THE CONTRACTOR SHALL PREPARE AND SUBMIT TO GOVERNMENTAL AGENCIES AND UTILITY COMPANIES SHOP DRAWINGS, WHICH ARE REQUIRED BY THESE AGENCIES, FOR THEIR APPROVAL.
6. THE CONTRACTOR SHALL NOTIFY THE ARCHITECT/ENGINEER/OWNER OF ANY MATERIALS OR APPARATUS BELIEVED TO BE INADEQUATE, UNSUITABLE, IN VIOLATION OF LAWS, ORDINANCES, RULES OR REGULATIONS OF AUTHORITIES HAVING JURISDICTION.
7. THE CONTRACTOR SHALL PREPARE AND SUBMIT TO THE FIRE PREVENTION BUREAU THE DOCUMENTS, INCLUDING DRAWINGS, REQUIRED TO OBTAIN APPROVAL OF EMERGENCY LIGHTING AND EXIT SIGN TYPES AND LOCATIONS. A COPY OF THE APPROVED DRAWINGS SHALL BE PROVIDED TO THE ARCHITECT BEFORE THE START OF CONSTRUCTION.
8. THE CONTRACTOR SHALL PREPARE THE DOCUMENTS, INCLUDING DRAWINGS, REQUIRED TO OBTAIN APPROVAL OF THE EQUIPMENT AND LOCATIONS OF THE DEVICES THAT COMPRISE THE BUILDING FIRE ALARM LIFE SAFETY SYSTEM. A COPY OF THE DRAWINGS AND CUT SHEETS SHALL BE PROVIDED TO THE ENGINEER FOR REVIEW AND APPROVAL. THE APPROVED DRAWINGS WILL BE STAMPED, SIGNED AND RETURNED TO E.C. TO SUBMIT TO THE BUILDING DEPARTMENT.
9. THE CONTRACTOR SHALL CAREFULLY EXAMINE THE CONTRACT DOCUMENTS, VISIT THE SITE, AND THOROUGHLY BECOME FAMILIAR WITH THE BUILDING STANDARDS AND LOCAL CONDITIONS RELATING TO THE WORK. FAILURE TO DO SO WILL NOT RELIEVE THE CONTRACTOR OF THE OBLIGATIONS OF THE CONTRACT.
10. THE CONTRACTOR SHALL PROVIDE TEMPORARY POWER AND WIRING FOR THE PERFORMANCE OF ALL TRADES, FOR THE ENTIRE PERIOD OF CONSTRUCTION AND SHALL REMOVE ALL TEMPORARY WIRING AT THE COMPLETION OF CONSTRUCTION.
11. THE EXISTING POWER, SIGNAL AND COMMUNICATION SYSTEMS ARE TO REMAIN IN SERVICE TO PROVIDE FOR THE OWNER'S FUNCTION. SHOULD IT BECOME NECESSARY TO SHUT-DOWN ANY SYSTEM OR PORTION OF A SYSTEM, APPROVAL IN WRITING MUST BE OBTAINED FROM THE OWNER AND SHALL ONLY FOR THE PERIOD AND TIME AGREED UPON. THE BID IS TO INCLUDE THE COST OF ANY TEMPORARY WIRING AND PREMIUM TIME REQUIRED FOR THE SHUTDOWN.
12. ALL MATERIALS, AND EQUIPMENT SHALL BE ERECTED, INSTALLED, CONNECTED, CLEANED, ADJUSTED, TESTED, CONDITIONED, AND PLACED IN SERVICE IN ACCORDANCE WITH THE MANUFACTURER'S DIRECTIONS AND RECOMMENDATIONS. THIS INCLUDES ANY EXISTING MATERIALS OR EQUIPMENT THAT IS USED.
13. ALL CUTTING, DRILLING AND PATCHING OF MASONRY, STEEL OR IRON WORK BELONGING TO THE BUILDING MUST BE DONE BY THIS CONTRACTOR IN SUCH A MANNER THAT HIS WORK MAY BE PROPERLY INSTALLED, BUT UNDER NO CONDITIONS MAY STRUCTURAL WORK BE CUT, EXCEPT AT THE DIRECTION OF THE ARCHITECT-DESIGNER OR THEIR REPRESENTATIVE.
14. REFER TO ARCHITECTURAL DRAWINGS FOR EXACT LOCATIONS AND MOUNTING HEIGHTS OF ELECTRICAL EQUIPMENT.
15. THE CONTRACTOR SHALL VERIFY THE CEILING TYPE BEFORE ORDERING LIGHTING FIXTURES.
16. ALL MATERIAL, EQUIPMENT, WIRING DEVICES, ETC. SHALL BE NEW, UNLESS SPECIFICALLY INDICATED AS EXISTING TO BE REUSED.
17. EXCEPT AS NOTED OTHERWISE, ALL WORK REQUIRED FOR THE INSTALLATION AS SHOWN ON DRAWINGS INCLUDING LABOR, EQUIPMENT AND MATERIALS SHALL BE IN STRICT COMPLIANCE WITH THE BUILDING STANDARDS.
18. PROVIDE COMPLETE METAL RACEWAY SYSTEMS AND ENCLOSURES FOR ALL WIRING THROUGHOUT THE EXTENT OF THE REQUIRED SYSTEM.
19. ELECTRICAL METALLIC TUBING (EMT) SHALL BE USED FOR ALL WALL OUTLETS & TELEPHONE OUTLETS RUNNING IN PARTITIONS, BELOW RAISED FLOOR OR ABOVE CEILINGS. EMT FITTINGS SHALL BE OF THE STEEL COMPRESSION TYPE, EXCEPT THAT SET SCREW FITTINGS MAY BE USED IN WALL PARTITIONS. CONDUITS LARGER THAN 2" DIAMETER OR CONDUITS OF ANY SIZE ROUTED OUTDOORS SHALL BE INTERMEDIATE METAL CONDUIT (IMC). CAST OR INDENTOR TYPE FITTINGS ARE NOT ALLOWED. PLENUM RATED TELEPHONE AND LOW VOLTAGE CONDUCTORS MAY RUN EXPOSED ABOVE GRID CEILING IN A CABLE SUPPORT SYSTEM, UNLESS NOTED OTHERWISE INDICATED ON PLANS.
20. MC CABLE SHALL BE PERMITTED ONLY IF BUILDING STANDARDS AND AUTHORITY HAVING JURISDICTION ALLOW. USE OF MC CABLE SHALL COMPLY WITH REQUIREMENTS AND LIMITATIONS DESCRIBED BY THE MOST CURRENT APPLICABLE N.E.C.
21. MINIMUM CONDUIT SIZE SHALL BE 1/2 INCH UNLESS OTHERWISE INDICATED.
22. FLEXIBLE CONDUIT CONNECTIONS TO RECESSED LIGHTING FIXTURES SHALL BE MADE WITH FLEXIBLE STEEL CONDUIT, 3/8 INCH MINIMUM.
23. WIRE NO. 8 AND SMALLER FOR USE IN INTERIOR DRY LOCATIONS SHALL BE TYPE THWN/THHN THERMOPLASTIC 600 VOLT INSULATED COPPER CONDUCTORS, FEEDERS AND POWER WIRING NO. 6 OR LARGER SHALL BE TYPE THWN 600 VOLT INSULATED COPPER. WIRE WHICH IS INSTALLED IN RACEWAYS IN MOIST OR DAMP LOCATIONS SHALL BE TYPE XHHW 600 VOLT INSULATED COPPER CONDUCTORS. NO WIRE SMALLER THAN NO. 12 AWG SHALL BE USED FOR LIGHTING OR POWER WIRING. WIRE NO. 10 AND SMALLER MAY BE SOLID OR STRANDED, WIRE NO. 8 AND LARGER SHALL BE STRANDED.
24. ALL NEW CIRCUIT BREAKERS FOR NEW OR EXISTING PANELBOARDS SHALL MATCH EXISTING BUILDING PANELBOARD MANUFACTURER AND BREAKER TYPE. THE CONTRACTOR SHALL PROVIDE NEW TYPE WRITTEN PANEL DIRECTORIES FOR ALL NEW PANELS CHANGED.
25. EACH SWITCH, LIGHT, RECEPTACLE AND OTHER MISCELLANEOUS DEVICE SHALL BE PROVIDED WITH A GALVANIZED OR SHERARDIZED PRESSED STEEL OUTLET BOX OF THE KNOCKOUT TYPE, OF NOT LESS THAN NO. 14 U.S. GAUGE STEEL. CONDUITS SHALL BE FASTENED WITH LOCKNUTS AND BUSHINGS AND ALL UNUSED KNOCKOUTS MUST BE LEFT SEALED. THERE MUST BE SUFFICIENT ROOM FOR WIRES AND BUSHINGS AND DEEP BOXES SHALL BE INSTALLED WHERE REQUIRED. BOXES SHALL BE SECURELY AND ADEQUATELY SUPPORTED.
26. ELECTRICAL CONTRACTOR SHALL PROVIDE ALL SPECIAL OUTLET BOXES THAT MAY BE REQUIRED TO ENCLOSE RECEPTACLES.
27. IN SUSPENDED CEILINGS SUPPORT CONDUIT AND JUNCTION BOXES DIRECT FROM THE STRUCTURAL SLAB, DECK, OR FRAMING PROVIDED FOR THAT PURPOSE. LIGHTING BRANCH CIRCUIT CONDUITS SHALL NOT BE CLIPPED TO THE CEILING SUPPORT WIRES OR SPLINE UNLESS THE CEILING SYSTEM HAS BEEN SPECIFICALLY DESIGNED FOR THAT PURPOSE.
28. WHERE FLOOR FITTINGS REQUIRE PENETRATION OF THE FLOOR SLAB, THEY SHALL BE STANDARD DEVICE LISTED BY UL FOR THE PURPOSE AND HAVE A UL FIRE RATING EQUAL TO THE FLOOR RATING.
29. CONTRACTOR SHALL WIRE TO, SET AND CONNECT ALL MOTORS, CONTROLS AND EQUIPMENT. FINAL CONNECTIONS TO MOTORS SHALL BE MADE WITH LIQUID TIGHT FLEXIBLE STEEL CONDUIT, 1/2 INCH MINIMUM.
30. PROVIDE LOCAL DISCONNECT SWITCHES FOR ALL MOTORS (PLENUM APPROVED AND REQUIRED).
31. NUMBERED CIRCUITS AND RACEWAY ROUTINGS ARE FOR CONVENIENCE OF DESIGN ONLY. ACTUAL FIELD CONDITIONS WILL VARY. INDICATE THE CIRCUIT NUMBER USED ON THE "AS-BUILT" DRAWINGS.
32. G.C. SHALL INCLUDE IN HIS COST THE REMOVAL OF ALL EXISTING ELECTRICAL DEVICES, CONDUITS, FIXTURES AND EQUIPMENT. DISCARD ALL EQUIPMENT AS REQUIRED. E.C. SHALL BE RESPONSIBLE FOR DISCONNECTING PRIMARY SERVICE AND TEMPORARY POWER.
33. CONTRACTOR SHALL COORDINATE WITH MECHANICAL AND PLUMBING DRAWINGS, AND INFORM ARCHITECT/ENGINEER OF ANY CONFLICTS.
34. PROVIDE "AS-BUILT" DRAWINGS AND SUBMIT TO OWNER.
35. ALL ELECTRICAL DEVICES SHALL MEET ADA REQUIREMENTS.
36. CONTRACTOR SHALL ENSURE ORIGINAL CIRCUIT INTEGRITY IS MAINTAINED WHEREVER A DEVICE IS REMOVED, RELOCATED OR RECIRCUITED, ORIGINAL CIRCUIT INTEGRITY SHALL BE MAINTAINED BOTH UP AND DOWN STREAM OF THE DEVICE.
37. CONTRACTOR SHALL REMOVE ALL DEENERGIZED OR UNUSED CIRCUIT WIRING UNLESS INDICATED OTHERWISE ON PLANS.
38. SUBMIT (4) COPIES OF THE FOLLOWING SHOP DRAWINGS FOR REVIEW.
    A. LIGHTING FIXTURES AND LAMPS.
    B. PROVIDE "AS-BUILT" DRAWINGS AND SUBMIT TO ARCHITECT/DESIGNER.
39. SHOP DRAWINGS SHALL INCLUDE MANUFACTURER'S NAMES, CATALOG NUMBERS, CUTS, DIAGRAMS AND OTHER SUCH DESCRIPTIVE DATA AS MAY BE REQUIRED TO IDENTIFY AND REVIEW THE EQUIPMENT. SUBMITTALS SHALL BE IN LOGICAL GROUPS, FOR EXAMPLE, ALL LIGHTING FIXTURES, PARTIAL SUBMITTALS WILL NOT BE REVIEWED.

ELECTRICAL LEGEND

NOTE: NOT ALL SYMBOLS ARE NECESSARILY USED ON THIS PROJECT.

- GROUNDED DUPLEX RECEPTACLE
- COMBO GROUNDED DUPLEX RECEPTACLE AND USB CHARGING PORT
- GROUNDED SWITCHED DUPLEX/QUAD RECEPTACLE
- GROUNDED SPLIT-WIRED RECEPTACLE
- GROUNDED SINGLE RECEPTACLE
- FOUR PLEX RECEPTACLE
- SPECIAL PURPOSE RECEPTACLE SUBSCRIPT = AMPACITY.
- FLOOR MOUNTED SPECIAL PURPOSE RECEPTACLE
- CLOCK RECEPTACLE
- FLOOR MOUNTED RECEPTACLE
- FLOOR MOUNTED FOUR PLEX RECEPTACLE
- POWER ONLY POKE-THRU
- POWER/DATA POKE-THRU
- MOTOR
- PLUG MOLD
- POWER/TELEPHONE POLE
- WIRELESS ACCESS POINT
- TELEPHONE OUTLET
- FLOOR MOUNTED TELEPHONE OUTLET
- FLOOR MOUNTED TELEPHONE/DATA OUTLET
- TELEPHONE/DATA OUTLET
- DATA OUTLET
- FLOOR MOUNTED DATA OUTLET
- SWITCH & RECEPTACLE COMBINATION
- 1, 2, OR 3 BUTTON STATION
- TELEVISION OUTLET
- FLOOR MOUNTED TELEVISION OUTLET
- JUNCTION BOX
- FLOOR MOUNTED JUNCTION BOX
- WALL MOUNTED J-BOX
- BUZZER
- CHIME
- COMBINATION STARTER/DISCONNECT SWITCH
- EQUIPMENT NON-FUSED DISCONNECT SWITCH
- EQUIPMENT FUSED DISCONNECT SWITCH
- MAGNETIC CONTROLLER (STARTER)
- ELECTRICAL PANELBOARD SURFACE MOUNTING
- ELECTRICAL PANELBOARD RECESSED MOUNTING
- TELEPHONE TERMINAL BOARD
- RESIDENTIAL COMMUNICATION CENTER
- MAIN DISTRIBUTION PANEL
- PULL BOX
- MOTOR CONTROL CENTER
- METER
- TRANSFORMER
- RELAY
- CONTACTOR
- SOLENOID VALVE
- CARD READER
- SPEAKER - PAGING AND OR SOUND SYSTEM
- THERMOSTAT
- BATTERY
- PHOTOCELL
- CIRCUIT BREAKER
- BREAKER WITH DRAWOUT FEATURE
- NORMALLY OPEN CONTACT
- NORMALLY CLOSED CONTACT
- FUSED SWITCH
- POWER TRANSFORMER
- CURRENT TRANSFORMER
- GROUND
- CONDUIT UP
- CONDUIT DOWN
- CONDUIT CAP
- CONDUIT CONTINUATION
- HOMERUN ARROWS
- MECHANICAL EQUIPMENT DESIGNATION
- DETAIL NOTE DESIGNATION
- KITCHEN EQUIPMENT DESIGNATION
- ELECTRICAL WIRE SIZE

- DELTA REVISION NOTE
- AREA OF RESCUE COMMUNICATION
- FIRE ALARM ANNUNCIATOR
- FIRE ALARM PANEL
- FIRE ALARM ANNUNCIATOR CONTROL PANEL
- MANUAL PULL STATION
- FIRE STROBE
- FIRE HORN OR SPEAKER WITH STROBE
- FIRE ALARM HORN & LIGHT
- FIRE ALARM HORN
- MAGNETIC DOOR HOLDER
- FIRE ALARM FLOW SWITCH
- TAMPER SWITCH
- FIRE THERMAL DETECTOR
- SMOKE DETECTOR I = IONIZATION P = PHOTOELECTRIC
- COMBINATION CO/SMOKE DETECTOR
- DUCT FIRE DETECTOR (RETURN)
- DUCT FIRE DETECTOR (SUPPLY)
- REMOTE INDICATING LIGHT
- FIRE / SMOKE DAMPER
- 120V. MOTORIZED SMOKE DAMPER
- VOLUME CONTROL
- MICROPHONE RECEPTACLE
- WALL MOUNTED FIXTURE
- RECESSED LIGHT FIXTURE
- SURFACE MOUNTED LIGHT FIXTURE
- STRIP LIGHT FIXTURE
- CEILING FIXTURE
- PORCELAIN LAMP HOLDER
- WALL WASHER
- TRACK HEAD FIXTURE
- TRACK WITH TRACK HEAD FIXTURE
- EMERGENCY FIXTURE - SHADED
- WALL PACK FIXTURE
- SURFACE CEILING FIXTURE
- POLE MOUNTED FIXTURE
- BATTERY PACK EMERGENCY LIGHT
- EXIT LIGHT - SHADED INDICATES FACE
- WALL MOUNTED OCCUPANCY SENSOR
- CEILING MOUNTED OCCUPANCY SENSOR
- CEILING MOUNTED VACANCY SENSOR
- SINGLE POLE SWITCH
- DOUBLE POLE SWITCH
- 3-WAY SWITCH
- 4-WAY SWITCH
- SWITCH WITH INTEGRATED OCCUPANCY SENSOR
- WALL MOUNTED VACANCY SENSOR SWITCH
- SWITCH & PILOT LAMP
- KEY OPERATED SWITCH
- DIMMER SWITCH
- THERMAL OVERLOAD SWITCH

AFF	ABOVE FINISH FLOOR
AC	ABOVE COUNTER - VERIFY HEIGHT
AFCI	ARC-FAULT CIRCUIT INTERRUPTER
AG	ABOVE COUNTER/GROUND FAULT INTERRUPTING
CCT	CIRCUIT
E	EXISTING TO REMAIN
EC	ELECTRICAL CONTRACTOR
EF	EXHAUST FAN
ER	EXISTING TO BE RELOCATED
EX	EXISTING TO BE REMOVED
EWC	ELECTRICAL WATER COOLER
GFCI	GROUND FAULT INTERRUPTING
HP	HOUSE PHONE
IH	INSTA HOT
(P)	PARTIAL CIRCUIT USED IN MULTIPLE LOCATIONS
(PART)	SAME AS (P)
(R)	RELOCATED
TTB	TELEPHONE TERMINAL BOARD
UON	UNLESS OTHERWISE NOTED
WG	WEATHER PROOF/GROUND FAULT INTERRUPTING
WP	WEATHER PROOF

Code violations that are found during inspection are required to be corrected. Permit issuance does not grant approval of a code violation.

Field Inspection consultation is available upon request. Call 303-739-7420 to request a consultation

Failure to follow approved plans may result in an hourly fee to review the field changes for code compliance.

City of Aurora Building Division
Reviewed for Code Compliance
Approved as Noted: *Erick B.*
Date: *Dec 06, 2016*
2015 INTERNATIONAL CODES & 2014 NEC

RSN: *1166695*
Permit #: *16-1212380*

WARE MALCOMB
Leading Design for Commercial Real Estate
architecture
planning
interiors
graphics
civil engineering
1600 champa st.
suite 300
denver, colorado 80202
p 720.488.2626

CONSULTING INC
2828 N SPEER BLVD, SUITE 210, DENVER, COLORADO, 80211
303.325.3271 MV-C.NET

COLORADO LICENSED
MARCUS T. VALLEY
41304
PROFESSIONAL ENGINEER

2ND FLOOR WHITE BOX
1444 SOUTH POTOMAC
AURORA, COLORADO

DATE	REMARKS
11.14.16	BLDG. DEPARTMENT SUBMITTAL
11.17.16	ELECTRICAL REVISIONS

PA / PM:	
DRAWN BY:	
JOB NO.:	

SHEET
E0.0

Thu, 17 Nov 2016

J:\2016\2016-095-00\Cad\Elec\E0.0.dwg nickg 11.17.16 3:31 pm
J:\2016\2016-095--00\Cad\Elec\E0.0.dwg

CAUTION: IF THIS SHEET IS NOT 36 x 42 IT IS A REDUCED PRINT

DEMOLITION NOTES

1. REFER TO ARCHITECTURAL PLANS FOR EXTENT OF DEMOLITION.
2. THE CONTRACTOR SHALL VISIT THE SITE, AND THOROUGHLY BECOME FAMILIAR WITH THE EXTENT OF THE SCOPE AND LOCAL CONDITIONS RELATING TO THE WORK. FAILURE TO DO SO WILL NOT RELIEVE THE CONTRACTOR OF THE OBLIGATIONS OF THE CONTRACT.
3. REMOVE OUTLET, CONDUIT, AND CONDUCTORS FROM DEMOLISHED OBJECTS BACK TO SOURCE. MAINTAIN CIRCUIT CONTINUITY THROUGH CIRCUIT SERVING REMOVED DEVICE.
4. REFER TO ELECTRICAL FLOOR PLAN FOR THE NEW LOCATION OF RELOCATED 2X2 FLUORESCENT LIGHT FIXTURES.

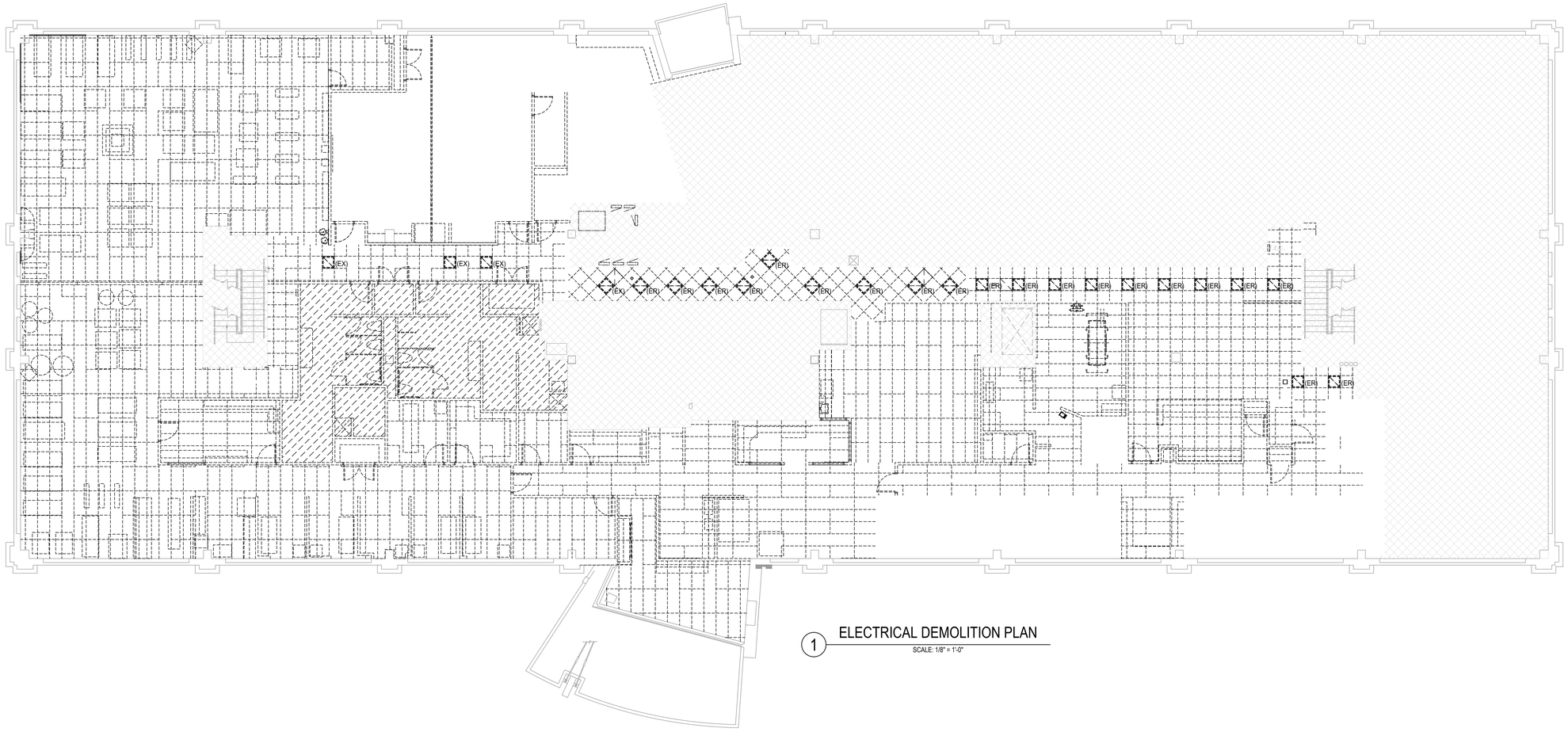

1 ELECTRICAL DEMOLITION PLAN

SCALE: 1/8" = 1'-0"

WARE MALCOMB
Leading Design for Commercial Real Estate

architecture
planning
interiors
graphics
civil engineering

1600 champa st.
suite 350
denver, colorado 80202
p 720.488.3626

CONSULTING INC
2828 N SPEER BLVD, SUITE 210, DENVER, COLORADO, 80211
303.325.3271 MV-C.NET

COLORADO LICENSED
MARCUS T. VARLEY
41304
PROFESSIONAL ENGINEER

2ND FLOOR WHITE BOX

1444 SOUTH POTOMAC

AURORA, COLORADO

DATE	REMARKS
11.14.16	BLDG. DEPARTMENT SUBMITTAL
11.17.16	ELECTRICAL RESIGNS

PA / PM:	
DRAWN BY:	
JOB NO.:	

City of Aurora Building Division
Reviewed for Code Compliance
Approved as Noted: *Erick B.*
Date: *Dec 06, 2016*
2015 INTERNATIONAL CODES & 2014 NEC

RSN: *1166695*
Permit #: *16-1212380*

SHEET
E1.0

C:\Users\nickg\appdata\local\temp\AcPublish_5856\E1.0.dwg nickg 11:17:16 3:31 pm
C:\Users\nickg\appdata\local\temp\AcPublish_5856\E1.0.dwg
Thu, 17 Nov 2016

CAUTION: IF THIS SHEET IS NOT 30 x42 IT IS A REDUCED PRINT

GENERAL NOTES

1. ALL EXISTING DEVICES SHOWN ON THIS PLAN ARE FOR REFERENCE ONLY.
2. EXTENT OF NEW WORK IS LIMITED TO NEWLY CONSTRUCTED CORRIDOR. RELOCATED 2'X2' FLUORESCENT LIGHTING FIXTURES, SHOWN IN SOLID BOLD LINE WEIGHT, ARE TO BE MOUNTED IN THE LOCATION AS SHOWN ON PLAN. RE-CIRCUIT LIGHT FIXTURES TO CIRCUIT SERVING AREA AS REQUIRED. TOTAL LOAD ON CIRCUIT HAS BEEN REDUCED.

This plan was reviewed for adopted codes and **NOT** for compliance with **ADA** or **FHA** accessibility requirements. Contact 800-949-4232 (**ADA**) and 303-894-7822 x 325 (**FHA**) for federal accessibility requirements that apply to your project.

Locate receptacles a minimum of 15" AFF and locate light switches, pull boxes, thermostats, etc. a maximum of 44" AFF.
2009 ICC/ANSI 117.1 308

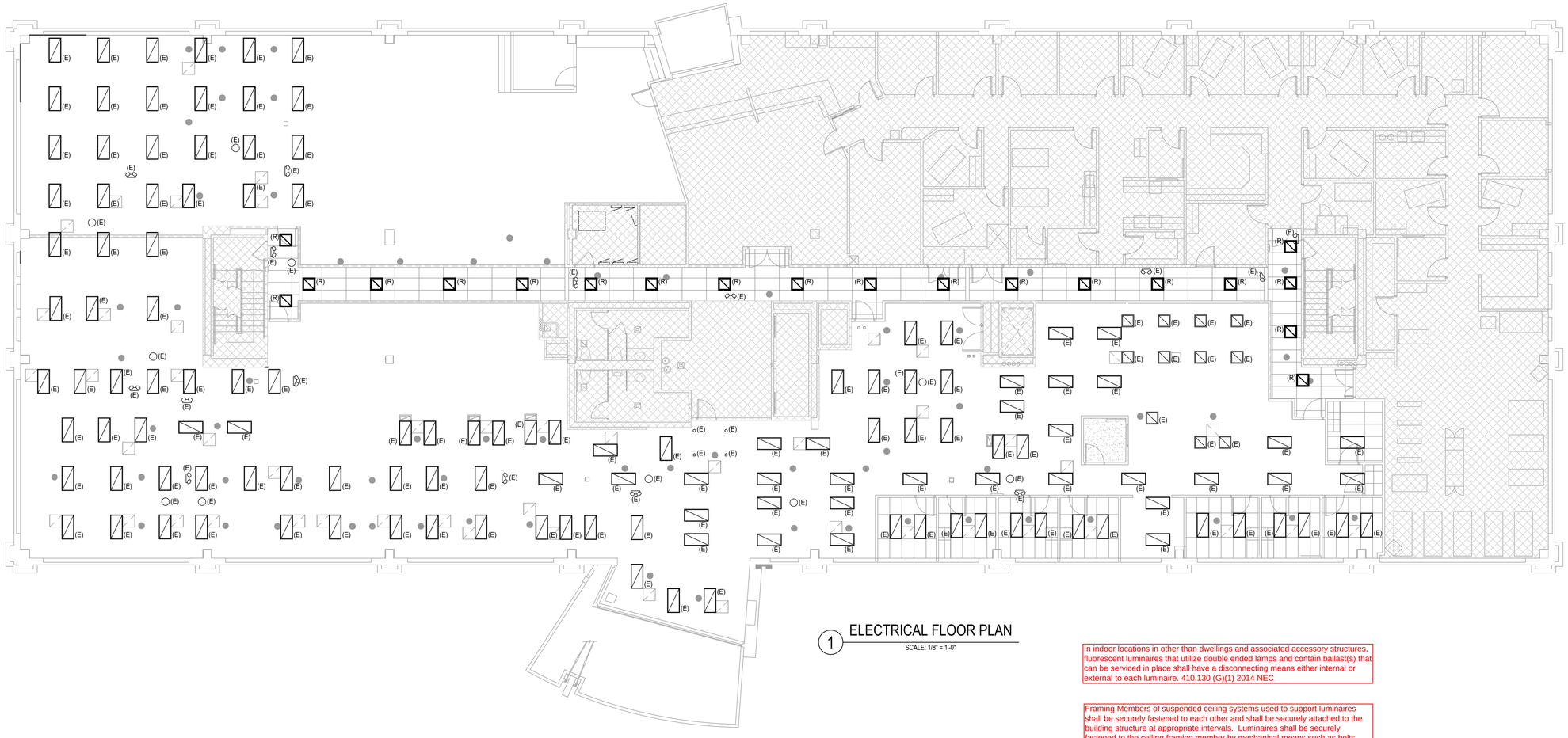

1 ELECTRICAL FLOOR PLAN
SCALE: 1/8" = 1'-0"

In indoor locations in other than dwellings and associated accessory structures, fluorescent luminaires that utilize double ended lamps and contain ballast(s) that can be serviced in place shall have a disconnecting means either internal or external to each luminaire. 410.130 (G)(1) 2014 NEC

Framing Members of suspended ceiling systems used to support luminaires shall be securely fastened to each other and shall be securely attached to the building structure at appropriate intervals. Luminaires shall be securely fastened to the ceiling framing member by mechanical means such as bolts, screws, or rivets. Listed clips identified for use with the type of ceiling framing member(s) and luminaire(s) shall also be permitted. 410.36 (B) 2014 NEC

Provide emergency illumination equipment that complies with 2014 NEC 700.12 (F) or 2014 NEC 700.

Wiring in air handling spaces must comply with 2014 NEC 300.22. Firestop penetrations per 2014 NEC 300.21. Secure and support equipment per 2014 NEC 300.11.

Code violations that are found during inspection are required to be corrected. Permit issuance does not grant approval of a code violation.

City of Aurora Building Division
Reviewed for Code Compliance
Approved as Noted: *Erick B.*
Date: ***Dec 06, 2016***
2015 INTERNATIONAL CODES & 2014 NEC

RSN: *1166695*
Permit #: *16-1212380*

WARE MALCOMB
Leading Design for Commercial Real Estate
architecture
planning
interiors
graphics
civil engineering
1600 champa st.
suite 300
denver, colorado 80202
p 720.488.3626

CONSULTING INC
2626 N SPEER BLVD, SUITE 210, DENVER, COLORADO, 80211
303.325.3271 MV-C.NET
COLORADO LICENSED MARCUS T. VARLEY 41304 PROFESSIONAL ENGINEER

2ND FLOOR WHITE BOX

1444 SOUTH POTOMAC

AURORA, COLORADO

DATE	REMARKS
11.14.16	BLDG. DEPARTMENT SUBMITTAL
11.17.16	ELECTRICAL REVISIONS

PA / PM:	
DRAWN BY:	
JOB NO.:	

SHEET
E2.0

J:\2016\2016-095-00\Cad\Elec\E2.0.dwg nickg 11.17.16 3:31 pm
J:\2016\2016--095--00\Cad\Elec\E2.0.dwg
Thu, 17 Nov 2016

CAUTION: IF THIS SHEET IS NOT 30"x42" IT IS A REDUCED PRINT

MECHANICAL SPECIFICATIONS

SUPPLY AND RETURN AIR DUCTWORK SHALL BE CONSTRUCTED OF GALVANIZED STEEL PER SMACNA DUCT CONSTRUCTION STANDARDS. RETURN AIR DUCTWORK AND SUPPLY AIR DUCTWORK SHALL BE CONSTRUCTED FOR 1" W.C. STATIC PRESSURE DOWNSTREAM OF VAV BOXES/FAN COILS AND 3" W.C. UPSTREAM OF VAV BOXES. SPIRAL LOCK-FORMED ROUND DUCT MAY BE UTILIZED WHERE SPACE ALLOWS. TRANSVERSE JOINTS AND LONGITUDINAL SEAMS SHALL BE SEALED AIR-TIGHT WITH MASTIC. RADIUSED ELBOWS (R/D=1.5) OR MITERED ELBOWS WITH SINGLE THICKNESS TURNING VANES SHALL BE UTILIZED. TURNING VANES SHALL BE SUPPORTED AT INTERVALS OF 36" MAXIMUM. TURNING VANE RUNNERS SHALL HAVE A VANE IN EVERY SLOT AND SHALL CONFORM TO SMACNA DUCT CONSTRUCTION STANDARDS FOR STANDARD SPACING.

INSULATED, FACTORY FABRICATED, FLEXIBLE DUCTWORK MAY BE UTILIZED AT RUNOUTS TO AIR DIFFUSERS. FLEXIBLE DUCTWORK SHALL CONSIST OF AN EXTERIOR REINFORCED LAMINATED VAPOR BARRIER, 1.5" FIBERGLASS INSULATION AND INTERIOR VINYL LINER WITH SPRING STEEL WIRE HELIX. FIBERGLASS INSULATION SHALL HAVE A MAXIMUM CONDUCTIVITY, K-VALUE, OF 0.25 AT 75T. VINYL LINER SHALL NOT BE PERFORATED. FLEXIBLE DUCT ASSEMBLY SHALL HAVE A FLAME SPREAD/SMOKE DEVELOPED RATING OF 25/50 OR LESS. FLEXIBLE DUCT TO FLEXIBLE DUCT CONNECTIONS SHALL BE MADE WITH FACTORY FABRICATED STEEL COLLARS. FLEXIBLE DUCT SHALL BE SECURED TO RIGID DUCTWORK AND AIR DEVICES WITH SCREWS AND DRAWBANDS. LENGTH OF FLEXIBLE DUCTWORK SHALL BE LIMITED TO 5' AND SHALL NOT BE COMPRESSED. FLEXIBLE DUCTWORK SHALL NOT BE USED FOR ELBOWS. FLEXIBLE DUCT SHALL NOT BE USED ABOVE INACCESSIBLE CEILINGS. FLEXIBLE DUCT SHALL NOT PASS THROUGH WALLS.

ALL RECTANGULAR SUPPLY AND RETURN AND TRANSFER RECTANGULAR DUCTWORK SHALL BE PROVIDED WITH DUCT LINER (INSIDE THE DUCT): 1 INCH THICK, RESIN BONDED GLASS FIBER, BLACK COATING ON AIR STREAM SURFACE, RATED BY MANUFACTURER FOR AT LEAST 4000 FPM AND MEETING THE REQUIREMENTS OF ASTM C1071 TYPE I. FIRE RESISTANCE SHALL MEET REQUIREMENTS OF NFPA 90A. FLAME SPREAD RATING NOT TO EXCEED 25. FUEL CONTRIBUTION AND SMOKE DEVELOPMENT NOT TO EXCEED 50. NOISE REDUCTION COEFFICIENT (NRC) OF NOT LESS THAN 0.60 WHEN TESTED IN ACCORDANCE WITH ASTM C423 USING AN "A" MOUNTING OR A MINIMUM OF 0.70 USING AN "F" MOUNTING. K VALUE NOT MORE THAN 0.26 BTUH PER SQUARE FOOT PER DEG. F AT 75 DEG. F OR AN "R" VALUE OF 4.2. MAXIMUM ABSOLUTE ROUGHNESS FACTOR PER FOOT OF .004

DUCT HANGERS SHALL BE CONSTRUCTED OF GALVANIZED STEEL. DUCTS SHALL BE SUPPORTED AND CONNECTED TO THE STRUCTURE PER SMACNA DUCT CONSTRUCTION STANDARDS. HANGERS AND SUPPORTS FOR GREASE DUCT SHALL BE OF NONCOMBUSTIBLE MATERIALS. FLEXIBLE DUCTS SHALL BE SUPPORTED WITH GALVANIZED STRAPS.

MANUAL VOLUME DAMPERS SHALL BE FURNISHED AND INSTALLED WHERE INDICATED AT SUPPLY AIR DUCT RUNOUTS TO AIR DIFFUSERS AND GRILLES AS NEAR AS POSSIBLE TO THE TRUNK DUCT. MANUAL VOLUME DAMPERS FOR RECTANGULAR DUCT SHALL BE CONSTRUCTED OF 16 GAUGE GALVANIZED STEEL AND BE THE OPPOSED BLADE TYPE. MANUAL VOLUME DAMPERS FOR ROUND DUCT SHALL BE CONSTRUCTED OF 16 GAUGE GALVANIZED STEEL AND BE THE SINGLE BLADE TYPE. DAMPER BEARINGS SHALL BE NYLON. STAND-OFFS TO OUTSIDE OF INSULATION SHALL BE PROVIDED FOR MANUAL VOLUME DAMPERS IN INSULATED DUCT. LOCKING AND INDICATING QUADRANTS SHALL BE PROVIDED WHERE DAMPER IS ACCESSIBLE.

AIR DEVICES SHALL BE AS SCHEDULED. EXPOSED SCREWS SHALL BE THE FINISHING TYPE AND PAINTED TO MATCH THE AIR DEVICE. SQUARE TO ROUND ADAPTORS SHALL BE PROVIDED WHERE REQUIRED FOR AIR DEVICES IN CEILINGS. AIR DEVICES SHALL BE FINISHED WITH WHITE BAKED ENAMEL UNLESS NOTED OTHERWISE. AIR DEVICES SHALL BE SECURED TO T-BAR CEILINGS WHERE APPLICABLE.

GENERAL NOTES

1. ALL WORK SHALL BE INSTALLED IN ACCORDANCE WITH ALL APPLICABLE STATE CODES, LOCAL CODES, AND OWNER'S STANDARDS INDICATED BY THE CONSTRUCTION DOCUMENTS.
2. MECHANICAL DRAWINGS ARE DIAGRAMMATIC AND DO NOT NECESSARILY INDICATE EVERY REQUIRED OFFSET, FITTING, ETC. DRAWINGS ARE NOT TO BE SCALED FOR DIMENSIONS. TAKE ALL DIMENSIONS FROM ARCHITECTURAL DRAWINGS, CERTIFIED EQUIPMENT DRAWINGS AND FROM THE STRUCTURE ITSELF BEFORE FABRICATING ANY WORK, VERIFY ALL SPACE REQUIREMENTS COORDINATING WITH OTHER TRADES, AND INSTALL THE SYSTEMS IN THE SPACE PROVIDED WITHOUT EXTRA CHARGES TO THE OWNER.
3. CONTRACTOR SHALL COORDINATE WORK INDICATED WITH ELECTRICAL, STRUCTURAL, AND ARCHITECTURAL DIVISIONS. VERIFY FIT OF MECHANICAL SYSTEMS PRIOR TO FABRICATION.
4. PROVIDE ALL EQUIPMENT SCHEDULED OR INDICATED ON THE DRAWINGS BUT NOT INCLUDED WITHIN THE SPECIFICATIONS INCLUDING ANY REQUIRED BUT NOT LISTED MISC. ITEMS NEEDED TO PROVIDE COMPLETELY OPERATIONAL SYSTEMS AS INDICATED WHETHER SPECIFICALLY CALLED FOR OR NOT. INSTALLATION SHALL CONFORM TO MANUFACTURERS RECOMMENDATIONS AND APPLICABLE CODES. PROVIDE SUBMITTALS FOR ALL PROPOSED EQUIPMENT AND MATERIALS TO BE UTILIZED. PROVIDE OPERATION AND MAINTENANCE MANUAL FOR ALL SYSTEMS AND EQUIPMENT AT END OF PROJECT.
5. ITEM DESIGNATIONS INDICATED HEREON ARE FOR PURPOSES OF THESE DOCUMENTS ONLY. CONTRACTOR SHALL VERIFY WITH OWNERS REPRESENTATIVE ACTUAL "TAGGING" INFORMATION TO BE PROVIDED FOR EACH ITEM OF MECHANICAL EQUIPMENT PRIOR TO NAMEPLATE ORDER RELEASE.
7. DUCT SIZES INDICATED ARE OUTSIDE DIMENSIONS, BRANCH RUN-OUT DUCTS TO DIFFUSERS AND GRILLES TO BE SAME SIZE AS DIFFUSER OR GRILLE CONNECTION SIZE UNLESS OTHERWISE NOTED.
8. LENGTH OF FLEXIBLE DUCTWORK SHALL BE LIMITED TO 5'-0" MAX. HORIZONTAL RUN WITH ONLY ONE 90° ELBOW PERMITTED. SECURE FLEXIBLE DUCTWORK WITH SCREWS & DRAWBANDS PER SMACNA STANDARDS.
9. REFER TO ARCHITECTURAL REFLECTED CEILING PLANS FOR ACTUAL LOCATION OF GRILLES, DIFFUSERS, AND ACCESS DOORS IN CEILING. SECURE DIFFUSERS & GRILLES TO T-BAR CEILINGS WHERE APPLICABLE. SUBMIT SHOP DWG. FOR APPROVAL PRIOR TO BEGINNING WORK.
10. AT THE COMPLETION OF WORK, PROVIDE TESTING AND BALANCING SERVICES FOR MECHANICAL SYSTEM. SUBMIT WRITTEN REPORT TO ARCHITECT LISTING SYSTEM AIRFLOWS, ELECTRIC DATA, TEMPERATURES, AND PRESSURE DROPS.
11. AT THE COMPLETION OF THE WORK AND PRIOR TO FINAL ACCEPTANCE, ALL PARTS OF THE WORK INSTALLED UNDER THIS SPECIFICATION SHALL BE THOROUGHLY CLEANED.
12. ALL EQUIPMENT, MATERIALS, AND INSTALLATION IS TO BE WARRANTEED FOR ONE YEAR TO BE FREE FROM DEFECT. PROVIDE WRITTEN WARRANTY TO OWNER.
13. THE OWNER AND ENGINEER ARE NOT RESPONSIBLE FOR THE CONTRACTOR'S SAFETY PRECAUTIONS OR TO MEANS, METHODS, TECHNIQUES, CONSTRUCTION SEQUENCES, OR PROCEDURES REQUIRED TO PERFORM HIS WORK.
14. THIS CONTRACTOR SHALL FIELD VERIFY LOCATIONS AND SIZES OF ALL EXISTING EQUIPMENT, DUCTWORK, PIPING, ELECTRICAL CONDUIT, STRUCTURAL MEMBERS, ETC., PRIOR TO STARTING OF CONSTRUCTION. COORDINATE CONFLICTS WITH THE GENERAL CONTRACTOR.
15. THIS CONTRACTOR SHALL COORDINATE ALL REQUIRED EXISTING BUILDING SERVICE SYSTEM OUTAGES WITH BUILDING MANAGEMENT.
16. ALL MECHANICAL SYSTEMS ARE REQUIRED TO BE INSTALLED PER BASE BUILDING REQUIREMENTS, LOCAL AND STATE JURISDICTIONAL CODES, ORDINANCES, AND APPLICABLE REGULATIONS.
17. PATCH AND REPAIR TO MATCH EXISTING, ANY WALL/CEILINGS TO BE ACCESSED TO ROUTE PIPING AND DUCTWORK.
18. EXISTING DUCTWORK, PIPING, AND EQUIPMENT TO REMAIN IS SHOWN LIGHT. NEW DUCTWORK, PIPING, AND EQUIPMENT IS SHOWN HEAVY. EXISTING DUCTWORK, PIPING, AND EQUIPMENT TO BE REMOVED IS SHOWN WITH X OVER ITEM.

MECHANICAL SHEET INDEX

ISSUE	SHEET NO.	SHEET DESCRIPTION
11.14.2016 BUILDING DEPARTMENT SUBMITTAL	M0.0	MECHANICAL SPECIFICATIONS, NOTES, LEGEND AND SCHEDULES
	M1.0	MECHANICAL FLOORPLAN

MECHANICAL LEGEND

ABBR	SYMBOL	DESCRIPTION
SA		EXISTING SUPPLY AIR
RA		EXISTING RETURN AIR
EA		EXISTING EXHAUST AIR
OA		EXISTING OUTSIDE AIR
SA		SUPPLY AIR
RA		RETURN AIR
EA		EXHAUST AIR
OA		OUTSIDE AIR
S	S	SPACE TEMP SENSOR
T-STAT	T	THERMOSTAT
MVD		MANUAL VOLUME DAMPER
UNO		UNLESS NOTED OTHERWISE
AFF		ABOVE FINISHED FLOOR
E		EXISTING
D		DEMO
R		RELOCATED
		POINT OF CONNECTION NEW TO EXISTING
		ITEMS TO BE DEMOLISHED

This sheet of drawings has not been reviewed for code compliance.

RSN: *1166695*
Permit #: *16-1212380 LT*

COLORADO LICENSED MECHANICAL ENGINEER 30163 PROFESSIONAL ENGINEER

11/14/2016

WARE MALCOMB
Leading Design for Commercial Real Estate
architecture
planning
interiors
graphics
civil engineering
1600 champa st.
suite 300
denver, colorado 80202
p 720.488.2626

MOEN ENGINEERING CONSULTANTS INC
2828 SPEER BLVD. SUITE 210
DENVER, CO 80211
P: (303)907-4288

2ND FLOOR WHITE BOX
1444 SOUTH POTOMAC
AURORA, COLORADO

DATE	REMARKS
11.14.16	BLDG. DEPARTMENT SUBMITTAL

PA / PM:	B MOEN
DRAWN BY:	C BROWN
JOB NO.:	

SHEET
M0.0

Mon, 14 Nov 2016

S:\Dropbox (MEC)\MEC JOBS\2015\2015-078-01 1444 S POTOMAC LEVEL 2\DRAWINGS\MECHANICAL\M00.dwg

CAUTION: IF THIS SHEET IS NOT 30"x42" IT IS A REDUCED PRINT

NOTES

1. EXISTING SUPPLY DIFFUSER TO BE REMOVED FROM EXISTING CEILING AND SUSPENDED FROM STRUCTURE. (TYPICAL)
2. REMOVE EXISTING RETURN GRILLE AND STOCKPILE ON SITE. (TYPICAL)
3. RELOCATE EXISTING SUPPLY DUFFUSER AS SHOWN. BALANCE TO CFM INDICATED. MODIFY DUCT TO MAKE CONNECTION IN NEW LOCATION.
4. RELOCATE EXISTING RETURN GRILLE AS SHOWN.
5. REMOVE EXISTING THERMOSTAT, BAG AND SUSPEND FROM STRUCTURE.
6. EXISTING BATHROOM WITH EXISTING BATHROOM EXHAUST TO REMAIN. (NO WORK).
7. REMOVE EXISTING SUPPLY DIFFUSER AND DISCARD. PROVIDE TEMPORARY COVER OVER DUCT OPENING.
8. REMOVE EXISTING EXHAUST GRILLE AND ASSOCIATED RUNOUT DUCT. CAP TAP AT EXHAUST MAIN.
9. EXISTING SUPPLY DIFFUSER AND RETURN GRILLE TO REMAIN. (NO WORK IN THIS ROOM)

GENERAL NOTE:

DEMOLITION CONSISTS OF REMOVING EXISTING CEILING GRID AND TENANT WALLS. EXISTING SUPPLY AIR DIFFUSERS ARE TO BE TEMPORARILY SUSPENDED FROM EXISTING STRUCTURE WITH WIRE. EXISTING RETURN GRILLES ARE TO BE REMOVED AND STOCKPILED ON SITE, COORDINATE STORAGE LOCATION WITH THE LANDLORD. EXISTING THERMOSTATS TO BE BAGGED AND TEMPORARILY SUSPENDED FROM THE VAV BOX / FAN POWERED BOX THEY SERVE. EXISTING OFFICE SUITES AND ASSOCIATED BATHROOM TO REMAIN AS-IS. EXISTING LOCKER ROOM TO BE REMOVED, REMOVE ALL EXISTING EXHAUST GRILLES AND CAP EXHAUST DUCTWORK AT MAINS.

PROVIDE DEDUCT ALTERNATE PRICING FOR CEILING TO REMAIN IN ALL EXISTING OFFICE AREAS, EXISTING SUPPLY DIFFUSERS AND RETURN AIR GRILLES TO REMAIN IN EXISTING LOCATIONS. EXISTING THERMOSTATS TO BE BAGGED AND SUSPENDED FROM EXISTING VAV BOX / FAN POWERED BOX.

NEW CONSTRUCTION CONSISTS OF INSTALLING NEW CEILING GRID IN COMMON CORRIDOR. EXISTING DIFFUSERS ARE TO BE RELOCATED AS NOTED.

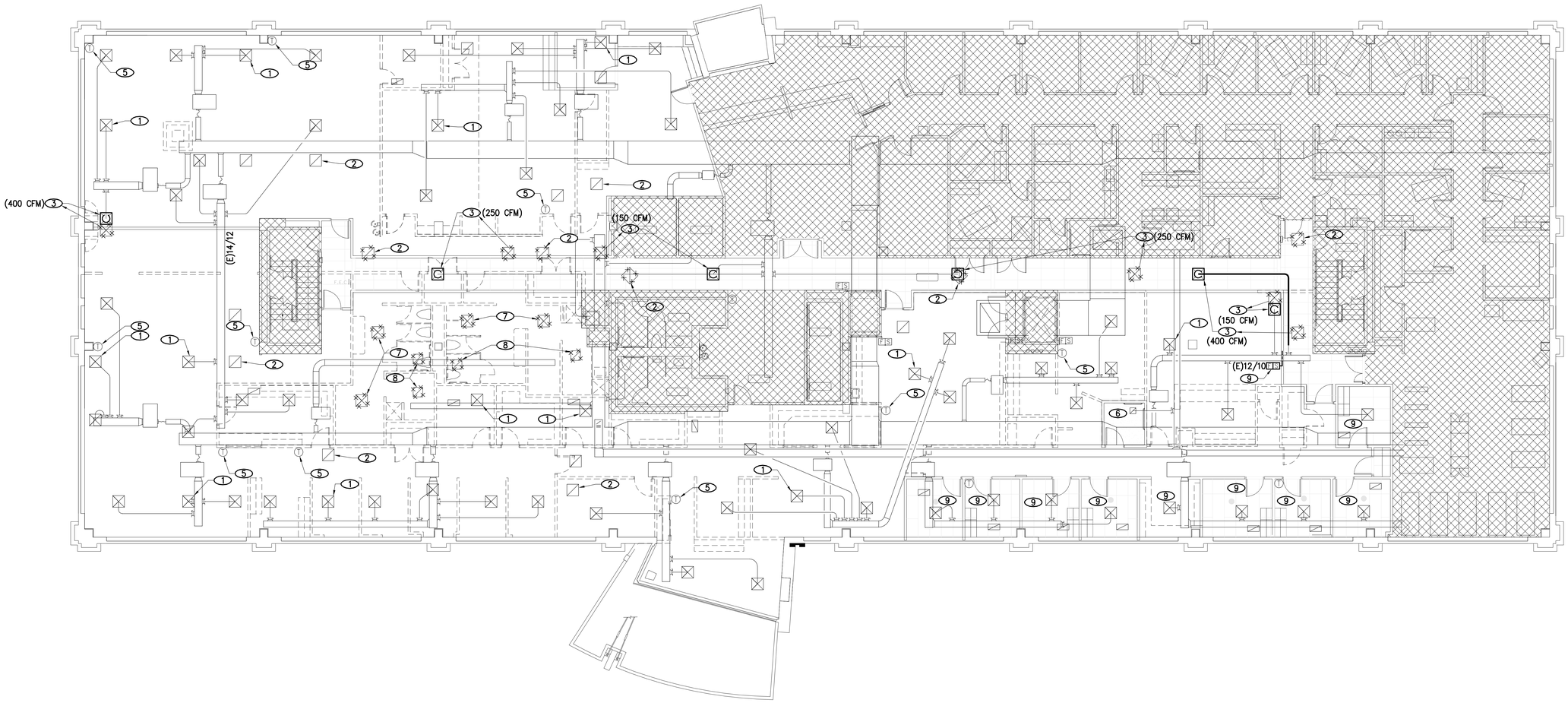

MECHANICAL FLOORPLAN

1/4"=1'-0"

1 / M1.0

City of Aurora Building Division
Reviewed for Code Compliance
Approved as Noted: *pmckown*
Date: *Dec 06, 2016*
2015 INTERNATIONAL CODES & 2014 NEC

RSN: *1166695*
Permit #: *16-1212380 LT*

11/14/2016

WARE MALCOMB
Leading Design for Commercial Real Estate

architecture
planning
interiors
graphics
civil engineering

1600 champa st.
suite 350
denver, colorado 80202
p 720.568.3626

MOEN ENGINEERING CONSULTANTS INC
2828 SPEER BLVD, SUITE 210
DENVER, CO 80211
P: (303)907-4288

2ND FLOOR WHITE BOX

1444 SOUTH POTOMAC

AURORA, COLORADO

DATE	REMARKS
11.14.16	BLDG. DEPARTMENT SUBMITTAL

PA / PM:	B MOEN
DRAWN BY:	C BROWN
JOB NO.:	

SHEET

M1.0

Mon, 14 Nov 2016

S:\Dropbox (MEC)\MEC JOBS\2015\2015-078-01 1444 S POTOMAC LEVEL 2\DRAWINGS\MECHANICAL\M10.dwg

CAUTION: IF THIS SHEET IS NOT 30"x42" IT IS A REDUCED PRINT

PLUMBING SPECIFICATIONS

ALL WETTED PARTS USED TO CONVEY WATER ANTICIPATED FOR HUMAN CONSUMPTION SHALL BE CERTIFIED LEAD-FREE IN COMPLIANCE WITH NSF/ANSI-372 OR NSF/ANSI 61G.

WATER PIPING ABOVE GRADE SHALL BE TYPE L, HARD DRAWN COPPER WITH WROUGHT COPPER FITTINGS SOLDERED WITH 95-5 TIN-ANTIMONY SOLDER OR BRAZED WITH SILVER BASED FILLER METAL.

SHUT-OFF VALVES ARE TO BE BRONZE BALL VALVES, TWO PIECE OR UNI-BODY FULL PORT WITH CHROME PLATED BALL, REINFORCED TFE SEATS AND STUFFING BOX, LEVER HANDLE AND SCREWED OR SOLDER ENDS. 400 PSI W.O.G., 150 PSI SATURATED STEAM.

WATER PIPING SHALL BE TESTED WITH WATER AT 125 PSIG. TEST PRESSURE SHALL BE MAINTAINED FOR A MINIMUM OF 30 MINUTES WITH NO LOSS. DOMESTIC WATER PIPING SHALL BE DISINFECTED IN ACCORDANCE WITH THE REQUIREMENTS OF THE JURISDICTIONAL HEALTH AND PLUMBING CODES.

ABOVE GRADE SOIL, WASTE, VENT AND STORM DRAIN PIPING SHALL BE NO-HUB, CAST IRON. INSTALLATION SHALL BE IN ACCORDANCE WITH MANUFACTURER'S RECOMMENDATIONS.

SOIL AND WASTE PIPING 2-1/2" AND SMALLER SHALL BE SLOPED 1/4" PER FOOT AND PIPING 3" AND LARGER SHALL BE SLOPED 1/8" PER FOOT UNLESS NOTED OTHERWISE ON DRAWINGS. STORM DRAIN PIPING SHALL BE SLOPED 1/8" PER FOOT UNLESS NOTED OTHERWISE ON DRAWINGS.

WALL CLEANOUTS FOR WASTE PIPING SHALL BE FURNISHED AND INSTALLED BELOW SINKS, LAVATORIES AND URINALS IN ACCORDANCE WITH APPLICABLE SECTIONS OF THE JURISDICTIONAL PLUMBING CODE. FLOOR/GRADE CLEANOUTS FOR WASTE PIPING SHALL BE FURNISHED AND INSTALLED IN ACCORDANCE WITH APPLICABLE SECTIONS OF THE JURISDICTIONAL PLUMBING CODE.

WASTE PIPING SHALL BE TESTED WITH WATER UNDER PRESSURE EQUIVALENT TO THE HIGHEST POINT AND 10' MINIMUM. THE SYSTEM OR PORTION THEREOF SHALL BE UNDER PRESSURE FOR A MINIMUM OF 15 MINUTES BEFORE INSPECTION.

PIPE HANGERS FOR INSULATED PIPE SIZES 1/2" TO 1-1/2" SHALL BE ADJUSTABLE, STEEL, BAND TYPE. PIPING SHALL BE PROVIDED WITH SEISMIC RESTRAINTS IN ACCORDANCE WITH THE SMACNA SEISMIC RESTRAINT MANUAL - GUIDELINES FOR MECHANICAL SYSTEMS.

PENETRATIONS OF FIRE RATED WALLS OR FLOORS BY PIPE SHALL BE SEALED BY A FIRESTOPPING SYSTEM UL LISTED FOR THE APPLICATION. PENETRATION SEAL MATERIALS SHALL BE INSTALLED IN ACCORDANCE WITH PRINTED INSTRUCTIONS OF THE UL FIRE RESISTANCE DIRECTORY AND MANUFACTURERS INSTRUCTIONS. FIRESTOPPING SYSTEM SHALL BE EQUAL TO 3M FIRE BARRIER. FIRESTOPPING MATERIAL SHALL BE CAULK OR PUTTY TYPE.

CHROME PLATED ESCUTCHEONS SHALL BE PROVIDED AT PIPE SLEEVES FOR EXPOSED BARE PIPE.

GENERAL NOTES

1. ALL WORK SHALL BE INSTALLED IN ACCORDANCE WITH ALL APPLICABLE STATE CODES, LOCAL CODES, AND OWNER'S STANDARDS INDICATED BY THE CONSTRUCTION DOCUMENTS.
2. PLUMBING DRAWINGS ARE DIAGRAMMATIC AND DO NOT NECESSARILY INDICATE EVERY REQUIRED OFFSET, FITTING, ETC. DRAWINGS ARE NOT TO BE SCALED FOR DIMENSIONS. TAKE ALL DIMENSIONS FROM ARCHITECTURAL DRAWINGS, CERTIFIED EQUIPMENT DRAWINGS AND FROM THE STRUCTURE ITSELF BEFORE FABRICATING ANY WORK, VERIFY ALL SPACE REQUIREMENTS COORDINATING WITH OTHER TRADES, AND INSTALL THE SYSTEMS IN THE SPACE PROVIDED WITHOUT EXTRA CHARGES TO THE OWNER.
3. CONTRACTOR SHALL COORDINATE WORK INDICATED WITH MECHANICAL, ELECTRICAL, FIRE PROTECTION, STRUCTURAL, CIVIL, AND ARCHITECTURAL DIVISIONS. CONTRACTOR SHALL VERIFY SIZE & LOCATION OF EXISTING UTILITIES PRIOR TO COMMENCING WORK, COORDINATE WITH OTHER TRADES AND MAKE FINAL CONNECTION.
4. PROVIDE ALL EQUIPMENT SCHEDULED OR INDICATED ON THE DRAWINGS BUT NOT INCLUDED WITHIN THE SPECIFICATIONS INCLUDING ANY REQUIRED BUT NOT LISTED MISC ITEMS REQUIRED TO PROVIDE COMPLETE OPERATIONAL SYSTEMS AS INDICATED WHETHER SPECIFICALLY CALLED FOR OR NOT. INSTALLATION SHALL CONFORM TO MANUFACTURERS RECOMMENDATIONS AND APPLICABLE CODES. PROVIDE SUBMITTALS FOR ALL PROPOSED FIXTURES, EQUIPMENT AND MATERIALS TO BE UTILIZED.
5. ELECTRICAL CHARACTERISTICS OF PLUMBING EQUIPMENT SHALL BE VERIFIED WITH ELECTRICAL DRAWINGS AND ELECTRICAL CONTRACTOR PRIOR TO EQUIPMENT ORDER RELEASE. ADDITIONAL ELECTRICAL WORK RESULTING FROM EQUIPMENT SUBSTITUTION IS THE RESPONSIBILITY OF THIS CONTRACTOR.
6. ITEM DESIGNATIONS INDICATED HEREON ARE FOR PURPOSES OF THESE DOCUMENTS ONLY. CONTRACTOR SHALL VERIFY WITH OWNERS REPRESENTATIVE ACTUAL "TAGGING" INFORMATION TO BE PROVIDED FOR EACH ITEM OF MECHANICAL EQUIPMENT PRIOR TO NAMEPLATE ORDER RELEASE.
7. CLEAN, TEST, AND SANITIZE ALL PLUMBING IN ACCORDANCE WITH REQUIREMENTS OF JURISDICTIONAL PLUMBING AND HEALTH CODES.
8. AT THE COMPLETION OF THE WORK AND PRIOR TO FINAL ACCEPTANCE, ALL PARTS OF THE WORK INSTALLED UNDER THIS SPECIFICATION SHALL BE THOROUGHLY CLEANED.
9. ALL EQUIPMENT, MATERIALS, AND INSTALLATION IS TO BE WARRANTEED FOR ONE YEAR TO BE FREE FROM DEFECT. PROVIDE WRITTEN WARRANTY TO OWNER.
10. THE OWNER AND ENGINEER ARE NOT RESPONSIBLE FOR THE CONTRACTOR'S SAFETY PRECAUTIONS OR TO MEANS, METHODS, TECHNIQUES, CONSTRUCTION SEQUENCES, OR PROCEDURES REQUIRED TO PERFORM HIS WORK.
11. THIS CONTRACTOR SHALL FIELD VERIFY LOCATIONS AND SIZES OF ALL EXISTING PIPING PRIOR TO STARTING OF CONSTRUCTION. COORDINATE CONFLICTS WITH THE GENERAL CONTRACTOR.
12. THIS CONTRACTOR SHALL COORDINATE ALL REQUIRED EXISTING BUILDING SERVICE SYSTEM OUTAGES WITH BUILDING MANAGEMENT.
13. ALL PLUMBING SYSTEMS ARE REQUIRED TO BE INSTALLED PER BASE BUILDING REQUIREMENTS, LOCAL AND STATE JURISDICTIONAL CODES, ORDINANCES, AND APPLICABLE REGULATIONS.
14. SAWCUT/CORE DRILL EXISTING FLOOR AS REQUIRED FOR INSTALLATION OR CAPPING OF WASTE AND VENT PIPING. PATCH AND REPAIR TO MATCH EXISTING.
15. EXISTING PLUMBING AND EQUIPMENT TO REMAIN IS SHOWN LIGHT. NEW PLUMBING AND EQUIPMENT IS SHOWN HEAVY. EXISTING PLUMBING AND EQUIPMENT TO BE REMOVED IS SHOWN WITH A HATCH OVER THE ITEM.

PLUMBING SHEET INDEX

ISSUE	SHEET NO.	SHEET DESCRIPTION
1 11.14.2016 BUILDING DEPARTMENT SUBMITTAL	P0.0	PLUMBING SPECIFICATIONS, NOTES, LEGEND AND SCHEDULES
1 11.14.2016 BUILDING DEPARTMENT SUBMITTAL	P1.0	PLUMBING FLOORPLAN

PLUMBING LEGEND

ABBR.	SYMBOL	DESCRIPTION
S OR W		SOIL, WASTE OR SEWER BELOW GRADE OR FLOOR
S OR W		SOIL, WASTE OR SEWER ABOVE GRADE OR FLOOR
FCO/GCO		FLOOR OR GRADE CLEANOUT
CO		CLEANOUT
V		VENT
AV	AV	
CW		COLD WATER
HW		HOT WATER
TDH		TOTAL DYNAMIC HEAD
PC		PIPE CAP
AFF		ABOVE FINISHED FLOOR
AFG		ABOVE FINISHED GRADE
UNO		UNLESS NOTED OTHERWISE
E		EXISTING
		POINT OF CONNECTION NEW TO EXISTING

This sheet of drawings has not been reviewed for code compliance.

RSN: *1166695*
Permit #: *16-1212380 LT*

COLORADO LICENSED PROFESSIONAL ENGINEER 29163 CHRISTOPHER J. BRUNELLE

11/14/2016

WARE MALCOMB
Leading Design for Commercial Real Estate
architecture
planning
interiors
graphics
civil engineering
1600 champa st.
suite 300
denver, colorado 80202
p 720.488.2626

MOEN ENGINEERING CONSULTANTS INC
2828 SPEER BLVD. SUITE 210
DENVER, CO 80211
P: (303)907-4288

2ND FLOOR WHITE BOX
1444 SOUTH POTOMAC
AURORA, COLORADO

DATE	REMARKS
11.14.16	BLDG. DEPARTMENT SUBMITTAL

PA / PM:	B MOEN
DRAWN BY:	C BROWN
JOB NO.:	

SHEET
P0.0

S:\Dropbox (MEC)\MEC JOBS\2015\2015-078-01 1444 S POTOMAC LEVEL 2\DRAWINGS\PLUMBING\P00.dwg

Mon, 14 Nov 2016

CAUTION: IF THIS SHEET IS NOT 30"x42" IT IS A REDUCED PRINT

NOTES

1. REMOVE EXISTING DRINKING FOUNTAIN AND DISCARD. DEMO CW, W AND VENT LINES BACK TO BUILDING MAINS AND CAP.
2. REMOVE EXISTING SINK AND DISCARD. DEMO CW, HW, W AND VENT LINES BACK TO BUILDING MAINS AND CAP.
3. EXISTING PLUMBING FIXTURES IN THIS ROOM TO REMAIN. (NO WORK)
4. REMOVE ALL EXISTING LOCKER ROOM FIXTURES INCLUDING BUT NOT LIMITED TO: LAVATORIES, WATER CLOSETS, SHOWERS AND FLOOR DRAINS, AND DISCARD. DEMO CW, HW, W AND VENT LINES BACK TO BUILDING MAINS AND CAP.
5. REMOVE EXISTING LAVATORY, FLOOR SINK AND WALL BOX AND DISCARD. DEMO CW, HW, W AND VENT LINES BACK TO BUILDING MAINS AND CAP.
6. REMOVE EXISTING SINK AND WALL BOX AND DISCARD. DEMO CW, HW, W AND VENT LINES BACK TO BUILDING MAINS AND CAP.

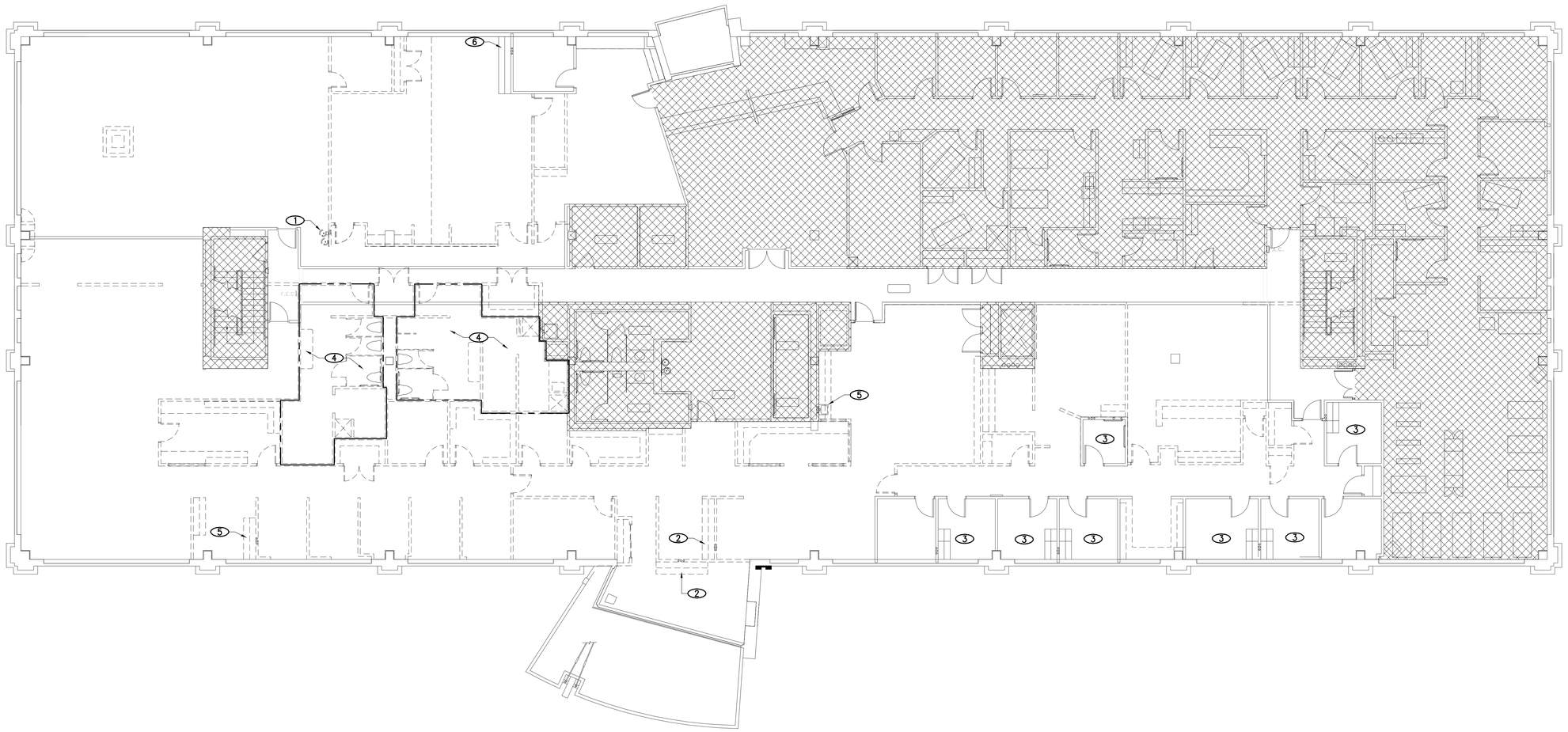

PLUMBING FLOORPLAN 1

1/4"=1'-0" P1.0

City of Aurora Building Division
Reviewed for Code Compliance
Approved as Noted: pmckown
Date: Dec 06, 2016
2015 INTERNATIONAL CODES & 2014 NEC

RSN: 1166695
Permit #: 16-1212380 LT

COLORADO LICENSED PROFESSIONAL ENGINEER 38163 PROFESSIONAL ENGINEER

11/14/2016

WARE MALCOMB
Leading Design for Commercial Real Estate

architecture
planning
interiors
graphics
civil engineering

1600 champa st.
suite 350
denver, colorado 80202
p 720.488.2626

MOEN ENGINEERING CONSULTANTS INC
2828 SPEER BLVD, SUITE 210
DENVER, CO 80211
P: (303)907-4288

2ND FLOOR WHITE BOX

1444 SOUTH POTOMAC

AURORA, COLORADO

DATE	REMARKS
11.14.16	BLDG. DEPARTMENT SUBMITTAL

PA / PM:	B MOEN
DRAWN BY:	C BROWN
JOB NO.:	

SHEET P1.0

Mon, 14 Nov 2016

S:\Dropbox (MEC)\MEC JOBS\2015\2015-078-01 1444 S POTOMAC LEVEL 2\DRAWINGS\PLUMBING\P10.dwg