Permit: 2018- 1474194 -CT
RSN: 1295353
1 of 14

1400 S. POTOMAC

FIRE ALARM SYSTEM SHOP DRAWINGS FOR:

City of Aurora Building Division
Counter Permit intake by: WHP
Date: Jun 13, 2018
RSN: 1295353
Permit: 2018-1474194 -CT
2015 INTERNATIONAL CODES & 2014 NEC Scope of permit to be field verified.

BUILDING CLASSIFICATIONS AND CODES

OCCUPANCY GROUP:	B
USE:	OFFICE
CONSTRUCTION TYPE:	TYPE–II
STORIES:	2 FLOORS
SPRINKLERED:	FULLY
REQUIREMENTS:	REQUIRED PER 2015 IFC
CODES:	2015 IFC, 2015 IBC, 2015 IMC, 2013 NFPA 72, 2017 NFPA 70

SYSTEM TYPE AND MONITORING

SYSTEM CLASSIFICATION:	(NFPA 72, CHAPTER 26), REMOTE STATION
SYSTEM TYPE:	ADDRESSABLE
WIRING CLASSIFICATION:	NAC – CLASS B SLC – CLASS B COMMUNICATION RISER – CLASS B
NOTIFICATION TYPE:	TEMPORAL PATTERN
MONITORING:	THIS SYSTEM IS AND WILL CONTINUE TO BE MONITORED BY A REMOTE SUPERVISING STATION, PER NFPA 72 CHAPTER 26, SECTION 3.
MONITORING COMPANY:	API (303)427–0880
ACCOUNT:	45–00–2941

SCOPE OF WORK

1. RELOCATE ONE (1) HORN/STROBE.
2. PROVIDE AND INSTALL ONE (1) HORN/STROBE.
3. PROVIDE AND INSTALL ONE (1) STROBE.

INDEX

FA–00 COVER PAGE
- GENERAL INFORMATION
- BUILDING REQUIREMENTS AND CODES
- SCOPE OF WORK

FA–01–A FIRE ALARM PLAN
- LEGEND
- MOUNTING HEIGHTS
- GENERAL NOTES
- KEY–PLAN
- VOLTAGE DROP
- BOOSTER CALCULATIONS
- MATRIX–SEQUENCE OF OPS

PROJECT:

INVISION SALLY JOBE
1400 S. POTOMAC ST., SUITE 180
AURORA CO, 80109

FIRE ALARM CONTRACTOR

FIRE ALARM SERVICES, INC.
4800 W. 60TH AVENUE
ARVADA, CO 80003
PH:(303)466–8800
FAX:(303)466–8820
SHANNON SMITH

FIRE ALARM DESIGNER:

FIRE ALARM SERVICES, INC.
4800 W. 60TH AVENUE
ARVADA, CO 80003
PH:(303)466–8800
FAX:(303)466–8820
STEVEN SPRAGUE

OWNER/GC:

EMERALD CONSTRUCTION MANAGEMENT, INC.
13275 E. FREMONT PLSCE # 300
CENTENNIAL, CO 80112
PH:(303)374–7242
CHRIS ATAMIAN

ARCHITECT:

DJ ARCHITECTURE
21076 E. JEFFERSON CIRCLE
AURORA, CO 80013
PH:(303)886–3860
JEFF JONES

GENERAL NOTES

1. FIRE ALARM SYSTEMS CANNOT BE COMBINED WITH BURGLAR ALARM SYSTEMS.
2. THE INSTALLER IS REQUIRED TO COORDINATE WITH THE MECHANICAL CONTRACTOR TO DETERMINE INSTALLATION OF SMOKE DETECTORS OR SENSORS (I.E., NOT CLOSER THAN 3 FEET FROM ANY SUPPLY/RETURN DIFFUSER AND THAT ADDITIONAL DETECTION MAY BE REQUIRED DUE TO THE RELOCATION OR SPACING ADJUSTMENT OF DETECTORS, AS A RESULT).
3. FIRE ALARM DEVICES MUST BE PLACED IN PROTECTED AREAS WITH AMBIENT TEMPERATURE RANGING FROM 32 DEGREES TO 120 DEGREES F.
4. DO NOT PLACE SMOKE DETECTORS WITHIN 3 FEET OF AIR SUPPLY REGISTERS AND DIFFUSERS.
5. FIRE ALARM SYSTEM SHALL BE MONITORED BY A CLASS 1 CENTRAL STATION.
6. FIRE ALARM CONTROL PANEL WILL BE PLACED IN THE LOCATION SPECIFIED WITHIN THE PLAN SUBMITTAL UNLESS APPROVED BY THE LIFE SAFETY FIELD INSPECTOR.
7. CITY OF AURORA BUILDING CODES DIVISION DOES NOT GRANT APPROVAL FOR ANY VIOLATIONS OF ADOPTED FIRE CODE. CODE VIOLATIONS UNCOVERED DURING FIELD INPECTIONS MUST BE CORRECTED.
8. PER THE 2009 IFC AND THE 2005 NEC THE INSTALLER MUST REQUEST A ROUGH WIRING INSPECTION ON THE FIRE ALARM SYSTEM PRIOR TO REQUESTING A FIRE ALARM FINAL INSPECTION.
9. THE CONTRACTOR SHALL CONDUCT A "PRE–TEST" OF THE PROJECT AREA PRIOR TO SCHEDULING AN ACCEPTANCE TEST WITH THE BUILDING CODES DIVISION.
10. REMOTE ALARM INDICATORS SHALL BE PROVIDED FOR ANY FIRE ALARM DETECTOR LOCATED IN A CONCEALED LOCATION WITH A NORMALLY LOCKED DOOR.
11. AT THE TIME OF FINAL FIRE ALARM INSPECTION, THE SYSTEM MUST BE SUPERVISED/MONITORED BY A CLASS 1 CENTRAL MONITORING AGENCY.
12. THE INSTALLING CONTRACTOR (OR DESIGNEE) MUST PROVIDE ALL NECESSARY TESTING EQUIPMENT AND PERORM ALL TESTING REQUIRED BY THE LIFE SAFETY FIELD INSPECTOR.
13. IN–DUCT SMOKE DETECTORS INSTALLED IN CONCEALED LOCATIONS OR, WHERE THE DETECTORS ALARM INDICATOR IS NOT READILY VISIBLE TO RESPONDING PERSONNEL SHALL BE PROVIDED WITH A REMOTE INDICATOR, REMOTE TEST STATION AND PLACARDING.
14. ALL NEW OR EXISTING FIRE ALARM SYSTEMS MUST BE CONNECTED TO ANY EXTERIOR HORN AND STROBE DEVICE. IF THE BUILDING IS FIRE SPRINKLED, A GENERAL ALARM ACTIVATION AT THE FIRE ALARM CONTROL PANEL WILL ACTIVATE THE EXTERIOR HORN AND STROBE. SILENCING THE PANEL MUST ALLOW THE VISUAL DEVICE TO CONTINUE UNTIL THE PANEL IS RESET.
15. FIRE ALARM SYSTEMS SHALL INCLUDE BOTH AUDIBLE AND VISUAL ALARMS. VISUAL ALARMS WILL BE REQUIRED IN ALL ACCESSIBLE PUBLIC AND COMMON– USE AREAS PER THE 2015 IFC AND THE 2003 ANSI A117.1 STANDARD.
16. PROVIDE A PRIMARY AND SECONDARY POWER SUPPLY FOR THE FIRE ALARM SYSTEM PER THE 2015 IFC, SECTION 907.5 AND THE 2013 NFPA 72.

Fire Alarm SERVICES, INC.

Fire Alarm Services, Inc.
4800 W. 60th Avenue
Arvada, CO 80003

(303)466–8800 (Phone)
(303)466–8820 (Fax)
contactus@fasonline.cc (E–Mail)
www.fasonline.cc

Steven Sprague
NICET Fire Alarm Systems
Level III
Certification #137416
Date: 6/ 11/18

Fire Alarm SERVICES, INC.
4800 W. 60TH AVENUE
ARVADA, CO 80003
phone: 303–466–8800
fax: 303–466–8820
www.fasonline.cc email: contactus@fasonline.cc

REVISIONS

NO.	DATE

DRAWN BY: S.RODRIGUEZ
DATE: 05/06/18
APPR. BY:
DATE:

PROJECT TITLE: FIRE ALARM SYSTEM TENANT FINISH FOR: INVISION SALLY JOBE
BUILDING NAME & ADDRESS: 1400 S. POTOMAC
1400 S. POTOMAC ST.
AURORA, CO 80109
PROJECT NUMBER: 18014118

FIRE ALARM & DETECTION SYSTEM
DRAWING TITLE: SUITE 180 FIRE ALARM PLAN
SCALE: N/A

PROJECT SHEET TITLE
FA–00

Permit: 2018- 1474194 -CT
RSN: 1295353
2 of 14

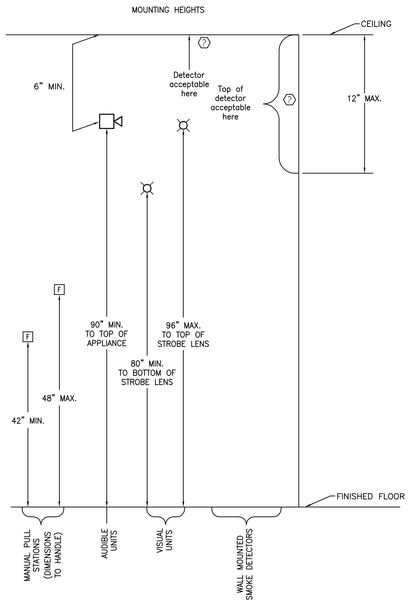

GENERAL NOTES:

1. THE CEILING IS A TYPICAL 9' A.F.F. DROPPED CEILING WITH NO SLOPES.

FIRE ALARM SYMBOLS LEGEND

EXISTING	DESCRIPTION	PROPOSED
	STROBE – Wall Mount or CM = Ceiling Mount	
	SMOKE DETECTOR – x = photo, ion	
	HORN STROBE – Wall Mount or CM = Ceiling Mount	
	HORN = Wall Mount or CM = Ceiling Mount	
	REMOTE LED	
	END OF LINE RESISTOR	
	BOOSTER PANEL	
	PULL STATION	
	FIREMAN'S PHONE JACK	
	HEAT DETECTOR – x =135, 200, ROR	
	FLOW SWITCH	
	TAMPER SWITCH	
	DUCT DETECTOR – x = photo, ion	
	MONITOR MODULE	

NOTIFICATION APPLIANCE CIRCUIT NUMBER
NOTIFICATION APPLIANCE PANEL NUMBER
DEVICE NUMBER

NAC1-2-3

POWER EXPANDER NUMBERING

	SPEAKER LINE "A"	SPEAKER LINE "B"	

RL = RELOCATED DEVICES
RR = REMOVE AND REINSTALL
RPL = REMOVE AND REPLACE
J = J-BOX

INCREMENTAL VOLTAGE DROP CALCULATIONS FOR AUDIBLE/ VISUAL CIRCUITS
MINIMUM UL RATED VOLTAGE: 16 VOLTS
Current shown in calculations is RMS current at 16 volts.

Resistance:	12 Guage	2.01
	14 Guage	3.19
	16 Guage	5.08

Circut Number: NAC1-1
Location: Floor 1 Booster Panel — Input Voltage = 20.4

Notification Circuit	Current (in Amps)	Wire Distance (in Feet)	Total Distance (in Feet)	Wire Size (AWG)	Resistance (Ohms)	Voltage Drop	From Baseline Voltage
CM Horn Strobe 75CD	0.3160	60	60	14	0.3828	0.2990	20.1010
Horn Strobe 15CD	0.1290	29	89	14	0.1850	0.0860	20.0150
Strobe 15CD	0.1030	31	120	14	0.1978	0.0665	19.9485
Horn Strobe 15CD	0.1290	14	134	14	0.0893	0.0208	19.9277
Strobe 15CD	0.1030	18	152	14	0.1148	0.0119	19.9158
End of Line Resistor	0.0010	0	152	14	0.0000	0.0000	19.9158
Total:	0.7810	152			0.9698	0.4842	19.9158
Total Devices:	5						

1400 S. POTOMAC BUILDING SEQUENCE OF OPERATIONS

SYSTEM OUTPUTS

	FACP Annunciation							Notification				FSC		Monitoring			
	A Actuate Common Alarm Signal Indicator	B Actuate Audible Alarm Signal	C Actuate Common Supervisory Signal Indicator	D Actuate Audible Supervisory Signal	E Actuate Common Trouble Signal Indicator	F Actuate Audible Common Trouble Signal	G Display Change of Status	H Actuate 1st Floor Evacuation Signals (Horn/Strobes)	I – Actuate 2nd Floor Evacuation Signals (Horn/Strobes)	J – Actuate Exterior Horn/Strobe	K Silence Audible Signal (Horns)	L Release Magnetically Held Smoke Doors	M Recall Elevator(s) to 1st Floor – Primary Recall	N Recall Elevator(s) to 2nd Floor – Alternate Recall	O Transmit Fire Alarm Signal to Supervising Station	P Transmit Trouble Signal to Supervising Station	Q Transmit Supervisory Signal to Supervising Station	R Transmit Waterflow Signal to Supervising Station
1 Manual Pull Station – 1st Floor	X	X					X	X	X			X			X				1
2 Manual Pull Station – 2nd Floor	X	X					X	X	X			X			X				2
3 Smoke Sensor – 1st Floor Elev Lobby	X	X					X	X	X			X		X	X				3
4 Smoke Sensor – 2nd Floor Elev Lobby	X	X					X	X	X			X	X		X				4
5 Smoke Sensor – All Other Locations	X	X					X	X	X			X			X				5
6 Heat Sensors – 1st Floor	X	X					X	X	X			X			X				6
7 Sprinkler Waterflow – 1st Floor	X	X					X	X	X	X		X			X			X	7
8 Sprinkler Waterflow – 2nd Floor	X	X					X	X	X	X		X			X			X	8
9 Sprinkler Control Valve			X	X			X										X		9
10 FACP AC Power Failure					X	X	X					X				X			10
11 FACP Low Battery					X	X	X									X			11
12 Open Circuit					X	X	X									X			12
13 Ground Fault					X	X	X									X			13
14 Notion Appliance Circuit Short					X	X	X									X			14
15 Alarm Signal Silence											X								15
	A	B	C	D	E	F	G	H	I	K	L	M	N	O	R	S	T	U	

SYSTEM INPUTS

FSC = Fire Safety Control

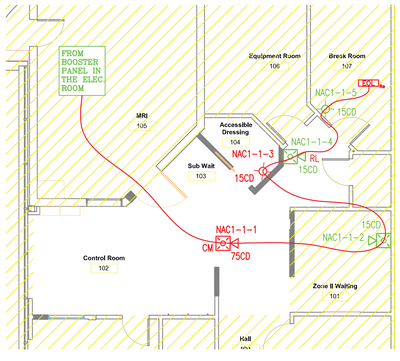

SUITE # 180 FIRE ALARM PLAN

SCALE: 1/8" = 1'-0"

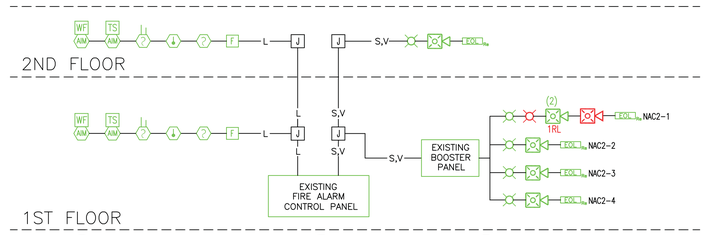

ONE-LINE RISER DIAGRAM

FIRE ALARM WIRE COLOR CODE CHART				
Code	Description	Wire Type	Color (+)	Color (–)
AC	120VAC Power Wiring	3#12 AWG Solid (w/ Green Ground)	Black (hot)	White (neu)
A	Annunciator Wiring	#18 AWG Twisted/Shielded Pair	Red	Black
D	Door Holder Wiring	2#14 AWG Solid	Red	Black
L	SLC Wiring (Signaling Line Circuit)	2#18 AWG Solid	Red	Black
P	24VDC Power Wiring	2#16 AWG Solid	Red	Black
R	Remote Light/Test Wiring	2#18 AWG Solid	Red	Black
S	Notification Appliance (Horns) Wiring	2 or 4#14 AWG Solid	Red	Black
S	Notification Appliance (Speaker) Wiring	2#16 AWG Twisted/Shielded Pair	Red	Black
T	Telephone Circuit Wiring	2#16 AWG Twisted/Shielded Pair	Red	Black
V	Notification Appliance (Strobe) Wiring	2 or 4#14 AWG Solid	Red	Black
X	Auxiliary Circuit (Relay) Wiring	2#14 AWG Solid	Red	Black
Z	IDC Wiring (Initiating Device Circuit)	2#18 AWG Solid	Red	Black
WIRE TYPE CLASS & STYLE	SLC – CLASS B	NAC – CLASS B		

BOOSTER CALCULATIONS

FOR: 1400 S. POTOMAC STREET
AURORA, CO 80012

HOURS OF SUPERVISION: 24 HOURS
MINUTES OF ALARM: 5 MINUTES

PANEL: EST BPS-6A

ITEM	QTY	PART NUMBER	DESCRIPTION	Device Supervisory Current	Device Alarm Current	Total Supervisory Current	Total Alarm Current
1	1	EXISTING	Notification Booster Panel	0.070000	0.190000	0.070000	0.190000
			TOTAL:			0.070000	0.190000

PERIPHERAL:

ITEM	QTY	PART NUMBER	DESCRIPTION	Device Supervisory Current	Device Alarm Current	Total Supervisory Current	Total Alarm Current
1	17	EXISTING	15cd Strobe	0.000000	0.103000	0.000000	1.751000
2	2	EXISTING	30cd Strobe	0.000000	0.141000	0.000000	0.282000
3	9	EXISTING	15cd Horn/Strobe	0.000000	0.129000	0.000000	1.161000
4	4	EXISTING	30cd Horn/Strobe	0.000000	0.167000	0.000000	0.668000
5	2	EXISTING	75cd Horn/Strobe	0.000000	0.281000	0.000000	0.562000
6	3	EXISTING	110cd Horn/Strobe	0.000000	0.337000	0.000000	1.011000
7	1	EXISTING	15cd Ceiling Mt. Strobe	0.000000	0.109000	0.000000	0.109000
8	1	G1RF-VM	**15cd Strobe**	0.000000	0.103000	0.000000	0.103000
9	1	GCF-HDVM	**75cd Ceiling Mt. Horn/Strobe**	0.000000	0.316000	0.000000	0.316000
			TOTAL:			0.000000	5.963000

SUPERVISORY:
PANEL: 0.070000 AMPS
PERIPHERAL 0.000000 AMPS
SUB-TOTAL: 0.070000 AMPS
X HOURS OF SUPERVISORY: 24.0000 HOURS
SUB-TOTAL: 1.680000 AMP HOURS

ALARM:
PANEL: 0.190000 AMPS
PERIPHERAL: 5.963000 AMPS
SUB-TOTAL: 6.153000 AMPS
X MINUTES OF ALARM: 0.08333 HOURS
SUB-TOTAL: 0.512750 AMP HOURS

TOTALS:
TOTAL SUPERVISORY: 1.680000 AMP HOURS
TOTAL ALARM: 0.512750 AMP HOURS
TOTAL: 2.192750 AMP HOURS
TOTAL PLUS SAFETY FACTOR(20%) 2.63130 AMP HOURS
Batteries Supplied – 1 Set of: 7.00000 AMP HOURS

Fire Alarm SERVICES, INC.
4800 W. 60TH AVENUE
ARVADA, CO 80003
phone: 303-466-8800
fax: 303-466-8820
www.fasonline.cc email: contactus@fasonline.cc

REVISIONS | NO. | DATE

DRAWN BY: S.RODRIGUEZ | DATE: 05/06/18
APPR. BY: | DATE:

FIRE ALARM & DETECTION SYSTEM
DRAWING TITLE: SUITE 180 FIRE ALARM PLAN
SCALE: AS SHOWN

PROJECT TITLE: FIRE ALARM SYSTEM TENANT FINISH FOR: INVISION SALLY JOBE
BUILDING NAME & ADDRESS: 1400 S. POTOMAC 1400 S. POTOMAC ST. AURORA, CO 80109
PROJECT NUMBER: 18014118

PROJECT SHEET TITLE: FA-01

Steven Sprague
NICET Fire Alarm Systems
Level III
Certification #137416
Date: 6/11/18

Permit: 2018-1474194-CT
FSN: 1296353
3 of 14

Steven Sprague
NICET Fire Alarm Systems
Level III
Certification #137416
Date: 6/11/18

PROJECT SHEET TITLE
FA-02

FIRE ALARM & DETECTION SYSTEM

DRAWING TITLE:
SUITE 180
FIRE ALARM PLAN

SCALE: N/A

PROJECT TITLE	FIRE ALARM SYSTEM TENANT FINISH FOR: INVISION SALLY JOBE
BUILDING NAME & ADDRESS	1400 S. POTOMAC 1400 S. POTOMAC ST. AURORA, CO 80109
PROJECT NUMBER	18014118

DRAWN BY:	NO.	DATE	REVISIONS
S.RODRIGUEZ			
DATE: 05/06/18			
APPR. BY:			
DATE:			

Fire Alarm SERVICES, INC.
4800 W. 60TH AVENUE
ARVADA, CO 80003
www.fasonline.cc
phone: 303-466-8800
fax: 303-466-8820
email: contactus@fasonline.cc

Fire Alarm Services, Inc.
4800 West 60th Avenue
Arvada, CO 80003

Phone (303) 466-8800
Fax (303) 466-8820
contactus@fasonline.cc

Fire Alarm System Addition at:

Invision sally jobe
1400 S. Potomac
1400 S. Potomac St., suite 180
Aurora CO, 80109

Scope of Work:

1. RELOCATE ONE HORN/STROBE.
2. PROVIDE AND INSTALL ONE HORN/STROBE.
3. PROVIDE AND INSTALL ONE (1) STROBE.

Steven Sprague
NICET Fire Alarm Systems
Level III
Certification #137416
Date: 06/06/18



Permit: 2018- 1474194 -CT
RSN: 1295353
5 of 14

Overview

The Genesis line of signals are among the smallest, most compact audible-visible emergency signaling devices in the world. About the size of a deck of playing cards, these devices are designed to blend with any decor.

Thanks to patented breakthrough technology, GE Security Genesis strobes do not require bulky specular reflectors and lenses. Instead, an exclusive cavity design conditions light to produce a highly controlled distribution pattern. Significant development efforts employing this new technology have given rise to a new benchmark in strobe performance – FullLight technology.

FullLight strobe technology produces a smooth light distribution pattern without the spikes and voids characteristic of specular reflectors. This ensures the entire coverage area receives consistent illumination from the strobe flash. As a result, Genesis strobes with FullLight technology go well beyond the minimum UL-required "T" pattern, significantly exceeding UL-1971 and ULC-S526 light distribution requirements.

Genesis strobes and horn-strobes offer 15 to 110 candela output, which is selectable with a conveniently-located switch on the side of the device. Models are also available that offer fixed 15/75 cd output. The candela output setting remains clearly visible even after final installation, yet it stays locked in place to prevent unauthorized tampering.

Genesis signals feature textured housings in architecturally neutral white or traditional fire red. An ingenious iconographic symbol indicates the purpose of the device. This universal symbol is code-compliant and is easily recognized by all building occupants regardless of what language they speak. Models with "FIRE" markings are also available.

Standard Features

- **Unique low-profile design**
  - The most compact UL-1971/ULC-S526 listed strobe available
  - Ultra-slim – protrudes less than one inch
  - Attractive appearance
  - No visible mounting screws
- **Four field-configurable options in one device**
  - Select 15, 30, 75, or 110 cd strobe output
  - Select high (default) or low dB horn output
  - Select temporal (default) or steady horn output
  - Select public mode flash rate (default) or private mode temporal flash
- **Fixed 15/75 cd model available**
- **Easy to install**
  - Fits standard 1-gang electrical boxes – no trim plate needed
  - Optional trim plate accommodates oversized openings
  - Pre-assembled with captive hardware
  - #12 AWG terminals – ideal for long runs or existing wiring
- **Unparalleled performance**
  - Industry's most even light distribution
  - Meets tough synchronizing standards for strobes
  - Single microprocessor controls both horn and strobe
  - Low current draw minimizes system overhead
  - Independent horn control over a single pair of wires
  - Highly regulated in-rush current
  - Multiple frequency tone improves sound penetration
  - Industry's first temporal strobe output

Field Configurable Horns and Strobes

Genesis Series



Application

Genesis strobes are UL 1971-listed for use indoors as wall-mounted public-mode notification appliances for the hearing impaired. Prevailing codes require strobes to be used where ambient noise conditions exceed 105 dBA (87dBA in Canada), where occupants use hearing protection, and in areas of public accommodation as defined in the *Americans with Disabilities Act (see application notes – USA)*.

Combination horn-strobe signals must be installed in accordance with guidelines established for strobe devices.

Strobes

Genesis strobes are UL 1971-listed for use indoors as wall-mounted public-mode notification appliances for the hearing impaired. Prevailing codes require strobes to be used where ambient noise conditions exceed specified levels, where occupants use hearing protection, and in areas of public accommodation. Consult with your Authority Having Jurisdiction for details.

All Genesis strobes exceed UL synchronization requirements (within 10 milliseconds other over a two-hour period) when used with a synchronization source. Synchronization is important in order to avoid epileptic sensitivity.

NOTE: The flash intensity of some visible signals may not be adequate to alert or waken occupants in the protected area. Research indicates that the intensity of strobe needed to awaken 90% of sleeping persons is approximately 100 cd. GE Security recommends that strobes in sleeping rooms be rated at at least 110 cd.

WARNING: These devices will not operate without electrical power. As fires frequently cause power interruptions, further safeguards such as backup power supplies may be required.

Horns

Genesis horn output reaches as high as 99 dB and features a unique multiple frequency tone that results in excellent sound penetration and an unmistakable warning of danger. Horns may be configured for either coded or non-coded signal circuits. They can also be set for low dB output with a jumper cut that reduces horn output by about 5 dB. Horn-only models may be ceiling-mounted or wall-mounted.

The suggested sound pressure level for each signaling zone used with alert or alarm signals is at least 15 dB above the average ambient sound level, or 5 dB above the maximum sound level having a duration of at least 60 seconds, whichever is greater, measured 5 feet (1.5 m) above the floor. The average ambient sound level is, A-weighted sound pressure measured over a 24-hour period.

Doubling the distance from the signal to the ear will theoretically result in a 6 dB reduction of the received sound pressure level. The actual effect depends on the acoustic properties of materials in the space. A 3 dBA difference represents a barely noticeable change in volume.

Installation

Genesis horns and strobes mount to any standard one-gang surface or flush electrical box. Matching optional trim plates are used to cover oversized openings and can accommodate one-gang, two-gang, four-inch square, or octagonal boxes, and European 100 mm square.



Genesis Horn/Strobe with optional trim plate

All Genesis signals come pre-assembled with captive mounting screws for easy installation. Two tabs at the top of the signal unlock the cover to reveal the mounting hardware. The shallow depth of Genesis devices leaves ample room behind the signal for extra wiring. Once installed with the cover in place, no mounting screws are visible.

Field Configuration

Temporal horn and horn-strobe models are factory set to sound in a **three-pulse temporal pattern**. Units may be configured for use with coded systems by cutting a jumper on the circuit board. This results in a **steady output** that can be turned on and off (coded) as the system applies and removes power to the signal circuit. A Genesis Signal Master is required when horn-strobe models are configured for coded systems. Non-temporal, horn-only models sound a steady tone.

Genesis strobes and horn-strobes are shipped from the factory ready for use as **UL 1971 compliant** signals for public mode operation. These signals may be configured for **temporal flash** by cutting a jumper on the circuit board. This battery-saving feature is intended for private mode signaling only.

Genesis strobes and horn-strobes may be set for **15, 30, 75, or 110 candela output**. The output setting is changed by simply opening the device and sliding the switch to the desired setting. The device does not have to be removed to change the output setting. The setting remains visible through a small window on the side of the device after the cover is closed.

Horns and horn-strobes are factory set for **high dB output**. **Low dB output** may be selected by cutting a jumper on the circuit board. This reduces the output by about 5 dB.

Wiring

Field wiring terminals accommodate #18 to #12 AWG (0.75 mm² to 2.5 mm²) wiring. Horns, strobes, and combination horn-strobes are interconnected with a single pair of wires as shown below.

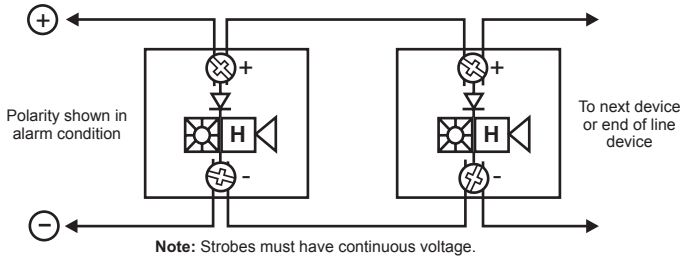

Note: Strobes must have continuous voltage.

Current Draw

Strobes, Horn-Strobes

Multi-cd Wall Strobes (G1-VM)

UL Rating	15 cd*	30 cd*	15/75 cd**	75 cd*	110 cd*
	RMS	RMS	RMS	RMS	RMS
16 Vdc	103	141	152	255	311
16 Vfwr	125	179	224	346	392

*G1-VM multi-cd; **G1F-V1575 fixed 15/75 cd

Typical Current	15 cd		30 cd		15/75		75 cd		110 cd	
	RMS	Mean	RMS	Mean	RMS	Mean	RMS	Mean	RMS	Mean
16 Vdc	85	79	127	124	150	140	245	243	285	283
20 Vdc	71	66	98	96	123	114	188	186	240	238
24 Vdc	59	55	82	80	104	97	152	150	191	190
33 Vdc	46	44	64	63	84	77	112	111	137	136
16 Vfwr	119	64	169	97	223	126	332	203	376	240
20 Vfwr	103	51	143	76	189	100	253	150	331	198
24 Vfwr	94	44	129	65	169	85	218	121	262	152
33 Vfwr	87	37	112	52	148	68	179	89	205	106

Wall Temporal Horn-strobes – High dB Setting

UL Rating	15 cd*	30 cd*	15/75 cd**	75 cd*	110 cd*
	RMS	RMS	RMS	RMS	RMS
16 Vdc	129	167	172	281	337
16 Vfwr	176	230	269	397	443

*G1-HDVM multi-cd
**G1F-HDV1575 fixed 15/75 cd

Typical Current	15 cd		30 cd		15/75		75 cd		110 cd	
	RMS	Mean	RMS	Mean	RMS	Mean	RMS	Mean	RMS	Mean
16 Vdc	102	89	135	129	160	152	246	242	309	305
20 Vdc	88	77	109	104	137	129	193	190	248	243
24 Vdc	81	71	94	90	122	114	161	158	203	200
33 Vdc	74	64	72	74	106	98	124	121	154	151
16 Vfwr	144	77	182	106	247	143	352	212	393	249
20 Vfwr	141	68	162	87	220	120	274	158	362	210
24 Vfwr	136	65	152	76	203	106	235	133	282	165
33 Vfwr	125	54	144	65	196	94	201	101	232	123

Wall Temporal Horn-strobes – Low dB Setting

UL Rating	15 cd*	30 cd*	15/75 cd**	75 cd*	110 cd*
	RMS	RMS	RMS	RMS	RMS
16 Vdc	122	160	146	274	330
16 Vfwr	162	216	231	383	429

*G1-HDVM multi-cd
**G1F-HDV1575 fixed 15/75 cd

Typical Current	15 cd		30 cd		15/75		75 cd		110 cd	
	RMS	Mean	RMS	Mean	RMS	Mean	RMS	Mean	RMS	Mean
16 Vdc	96	84	130	124	158	149	243	240	302	297
20 Vdc	79	70	104	99	133	124	189	186	241	237
24 Vdc	68	61	88	84	119	110	156	154	197	193
33 Vdc	56	52	71	68	100	93	118	116	146	143
16 Vfwr	128	69	180	104	241	139	344	204	389	244
20 Vfwr	118	60	157	84	213	115	266	156	343	200
24 Vfwr	113	54	144	74	195	101	230	128	279	161
33 Vfwr	112	48	137	64	182	87	197	99	226	117

Horns

Wall or Ceiling Mounted Temporal Horns (G1-HD)

UL Rating	High dB (RMS)	Low dB (RMS)
16 Vdc	26	19
24 Vdc	36	27
33 Vdc	41	33
16 Vfwr	51	37
24 Vfwr	69	52
33 Vfwr	76	70

Typical Current	High dB		Low dB	
	RMS	Mean	RMS	Mean
16 Vdc	22	17	17	14
20 Vdc	24	19	19	16
24 Vdc	27	21	22	18
33 Vdc	32	25	26	22
16 Vfwr	34	15	30	14
20 Vfwr	40	19	34	16
24 Vfwr	45	21	38	18
33 Vfwr	52	24	47	22

Wall or Ceiling Mounted Horns (G1-P)

UL Designation	Voltage Range	Max. Current, RMS
Regulated 24 Vdc	16 - 33 Vdc	13 mA
24 fwr	16 - 33 Vfwr	11 mA

Typical Current	RMS	Mean
24 Vdc	10	10
24 Vdc	11	11
31 Vdc	12	12
20 Vfwr	9	8
24 Vfwr	10	9

Notes and Comments

1. Current values are shown in mA.
2. UL Nameplate Rating can vary from Typical Current due to measurement methods and instruments used.
3. GE Security recommends using the Typical Current for system design including NAC and Power Supply loading and voltage drop calculations.
4. Use the Vdc RMS current ratings for filtered power supply and battery AH calculations. Use the Vfwr RMS current ratings for unfiltered power supply calculations.
5. Fuses, circuit breakers and other overcurrent protection devices are typically rated for current in RMS values. Most of these devices operate based upon the heating affect of the current flowing through the device. The RMS current (not the mean current) determines the heating affect and therefore, the trip and hold threshold for those devices.
6. Our industry has used 'mean' currents over the years. However, UL will direct the industry to use the 2004 RMS values in the future.

Permit: 2018- 1474194 -CT
RSN: 1295353
8 of 14

dBA output

Temporal Horns, Horn-strobes (G1-HD, G1-HDVM series)

High dB Setting	UL464		Average	Peak
	Temporal	Steady	Temporal/ Steady	Temporal/ Steady
16 Vdc	81.4	85.5	91.4	94.2
24 Vdc	84.4	88.6	94.5	97.6
33 Vdc	86.3	90.4	96.9	99.5

Low dB Setting	UL464		Average	Peak
	Temporal	Steady	Temporal/ Steady	Temporal/ Steady
16 Vdc	76.0	80.1	86.3	89.2
24 Vdc	79.4	83.5	89.8	92.5
33 Vdc	82.1	86.5	92.5	95.3

Steady Tone Horns (G1-P series)

	UL464	Average	Peak
16 Vdc	77 dBA, min	85 dBA	91 dBA
16 Vfwr	77 dBA, min	85 dBA	91 dBA

Notes

1. All values shown are dBA measured at 10 feet (3.01m).
2. UL464 values measured in reverberation room.
3. Average and Peak values are measured in anechoic chamber.

Average Sound Output (dBA)

(High dB setting, anechoic, 24V, measured at 10ft)

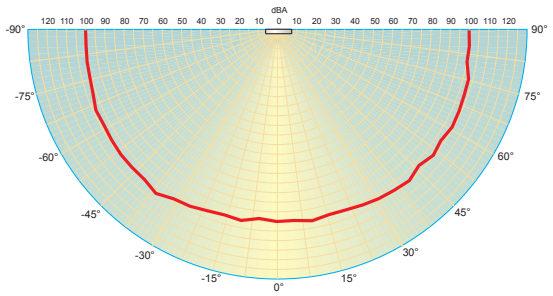

Light output - (effective cd)

Percent of UL rating versus angle

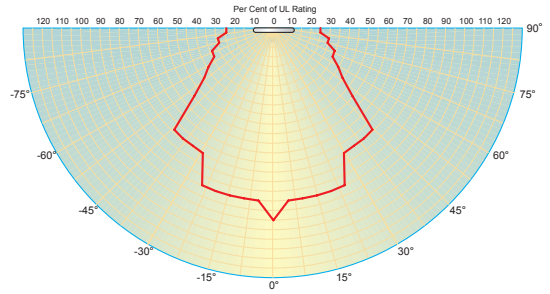

Specifications

Housing	Red or white textured UV stabilized, color impregnated engineered plastic. Exceeds 94V-0 UL flammability rating.
Lens	Optical grade polycarbonate (clear)
Mounting (indoor only)	Strobes and horn-strobes are for wall-mount installation only. Horn-only models may be ceiling- or wall-mounted. Flush mount: 2½ inch (64 mm) deep one-gang box Surface mount: Model 27193 surface mount box, wiremold box, or equivalent surface-mount box With optional trim plate: One-gang, two-gang, four-inch square, octagonal, or European single-gang box
Wire connections	Screw terminals: single input for both horn and strobe. #18 to #12 AWG (0.75 mm² to 2.5 mm²) wire size
Operating environment	Indoor only: 32-120°F (0-49°C) ambient temperature. 93% relative humidity
Agency listings/approvals	UL 1971, UL 1638, UL 464, ULC S525, ULC S526, CSFM, CE, FCC, MEA (FM pending). (All models comply with ADA Code of Federal Regulation Chapter 28 Part 36 Final Rule.)
Dimensions (HxWxD)	Signal: 4-1/2" x 2-3/4" x 13/16" (113 mm x 68 mm x 21 mm) Trimplate: 5" (127 mm); Height – 5-7/8" (149 mm); Depth – ½" (13 mm)
Operating voltage	G1-HD series temporal-tone horns: non-coded, filtered 16-33 Vdc or unfiltered 16-33 Vdc FWR (or coded when horn set to steady tone) G1-HDVM series temporal-tone horn-strobes: non-coded, filtered 16-33 Vdc or unfiltered 16-33 Vdc FWR (or coded (audible NAC only) when used with optional G1M Genesis Signal Master) G1-VM series strobes: non-coded, filtered 16 - 33 Vdc or unfiltered 16-33 Vdc FWR G1-P series steady-tone horns: coded or non-coded, filtered 20-31 Vdc or unfiltered 20-27 Vfwr
Strobe output rating	UL 1971, UL 1638, ULC S526: selectable 15 cd, 30 cd, 75 cd, or 110 cd output UL 1971: 15 cd (fixed 15/75 cd models) UL 1638, ULCS526: 75 cd (fixed 15/75 cd models)
Strobe flash rate	G1-VM strobes and G1-HDVM series temporal-tone horn-strobes: one flash per second synchronized with optional G1M Genesis Signal Master indefinitely within 10 milliseconds (or self-synchronized within 200 milliseconds over thirty minutes on a common circuit without G1M Genesis Signal Master) Temporal setting (private mode only): synchronized to temporal output of horns on same circuit
Synchronization Sources	G1M-RM, SIGA-CC1S, SIGA-MCC1S, BPS6A, BPS10A
Horn pulse rate	G1-HD temporal-tone horns and G1-HDVM series temporal-tone horn-strobes: temporal rate synchronized with optional G1M Genesis Signal Master indefinitely within 10 milliseconds (or self-synchronized within 200 milliseconds over thirty minutes on a common circuit without G1M Genesis Signal Master) G1-P steady-tone horns: continuous, steady tone only
Temporal audible pattern	½ sec ON, ½ sec OFF, ½ sec ON, ½ sec OFF, ½ sec ON, 1½ sec OFF, then repeat cycle

Ordering Information

Catalog Number		Description	Ship Wt. lbs (kg)
White Finish	Red Finish		
G1-HDVM	G1R-HDVM	Genesis Horn-Strobe (selectable 15, 30, 75, or 110 cd output, selectable high/low dB output)	0.25 (0.11)
G1-VM	G1R-VM	Genesis Strobe (selectable 15, 30, 75, or 110 cd output)	
G1-HD	G1R-HD	Genesis Temporal Horn (selectable high/low dB output)	
G1-P	G1R-P	Genesis Steady Horn (not compatible with Genesis Signal Master)	
G1F-HDVM	G1RF-HDVM	Genesis Horn-Strobe (selectable 15, 30, 75, or 110 cd output, selectable high/low dB output) – with "FIRE" marking	
G1F-VM	G1RF-VM	Genesis Strobe (selectable 15, 30, 75, or 110 cd output) – with "FIRE" marking	
G1F-HD	G1RF-HD	Genesis Temporal Horn (selectable high/low dB output) – with "FIRE" marking	
G1F-P	G1RF-P	Genesis Steady Horn with "FIRE" marking (not compatible with Genesis Signal Master)	
G1F-HDV1575	G1RF-HDV1575	15/75 cd temporal horn-strobe, hi/lo dB-24V – with "FIRE" marking (see note 1)	
G1F-V1575	G1RF-V1575	15/75 cd strobe – with "FIRE" marking (see note 1)	
Mounting Accessories			
G1T	G1RT	Genesis Trim Plate (for two-gang or 4" square boxes)	0.15 (0.7)
G1T-FIRE	G1RT-FIRE	Genesis Trim Plate (for two-gang or 4" square boxes) with "FIRE" markings	0.15 (0.7)
27193-16	27193-11	One-gang surface mount box	1 (0.4)
Synchronization Modules			
G1M		Genesis Signal Master – Snap-on Mount	0.2 (0.1)
G1M-RM		Genesis Signal Master – Remote Mount (1-gang)	
SIGA-CC1S		Intelligent Synchronization Output Module (2-gang)	0.5 (0.23)
SIGA-MCC1S		Intelligent Synchronization Output Module (Plug-in UIO)	0.18 (0.08)

Note 1: These 15/75 cd models provide fixed output and are not multi-candela devices. The 15 cd output component complies with UL1971, while the 75 cd output component complies with UL 1638.





Genesis Horn-Strobes may be ordered in red or white, with or without 'FIRE' marking. Order matching trim plates separately.

GE
Security

U.S.
T 888-378-2329
F 866-503-3996

Canada
T 519 376 2430
F 519 376 7258

Asia
T 852 2907 8108
F 852 2142 5063

Australia
T 61 3 9259 4700
F 61 3 9259 4799

Europe
T 32 2 725 11 20
F 32 2 721 86 13

Latin America
T 305 593 4301
F 305 593 4300

www.gesecurity.com

© 2007 General Electric Company
All Rights Reserved.

Genesis Series is a trademark of GE Security.

imagination at work

GE Security

EST Fire & Life Safety
Strobes, Horns, Bells & Chimes

Overview

Genesis ceiling horn-strobes are small, compact, and attractive audible-visible emergency signaling devices. Protruding no more than 1.6" (41 mm) from the ceiling, Genesis horn-strobes blend with any decor.

Thanks to patented breakthrough technology, GE Security Genesis strobes do not require bulky specular reflectors and lenses. Instead, an exclusive cavity design conditions light to produce a highly controlled distribution pattern. Significant development efforts employing this new technology have given rise to a new benchmark in strobe performance – FullLight technology.

FullLight strobe technology produces a smooth light distribution pattern without the spikes and voids characteristic of specular reflectors. This ensures the entire coverage area receives consistent illumination from the strobe flash. As a result, Genesis strobes with FullLight technology go well beyond the minimum UL-required "cross" pattern.

Depending on the model, Genesis horn-strobes feature 15 to 95, or 95 to 177 candela output (see ordering information), which is selectable with a conveniently-located switch on the front of the device. The candela output setting is clearly visible even after final installation, yet it remains locked in place to prevent unauthorized movement after installation.

Genesis horn-strobes feature textured housings in architecturally neutral white or eye-catching fire alarm red. An ingenious iconographic symbol indicates the purpose of the device. This universal symbol is code-compliant and is easily recognized by all building occupants regardless of what language they speak. Models with "FIRE" markings are also available.

Standard Features

- **Field configurable – no need to remove the device!**
  - 15/30/75/95 cd and 95/115/150/177 cd models available
  - Switch settings remain visible even after the unit is installed
  - Low/high dB settings
- **Unique low-profile design**
  - 30 per cent slimmer profile than comparable signals
  - No visible mounting screws
  - Available with white or red housings
- **Easy to install**
  - Fits all standard 4" square electrical boxes with plenty of room behind the signal for extra wire – no extension ring or trim plate needed
  - Pre-assembled with captive hardware – no loose pieces
  - #18 to #12 AWG terminals – ideal for long runs or existing wiring
- **Unparalleled performance**
  - Exclusive FullLight strobe technology produces the industry's most even light distribution
  - Single high-efficiency microprocessor controls both horn and strobe
  - Low current draw minimizes system overhead
  - Independent horn control provided over a single pair of wires
  - Highly regulated in-rush current allows the maximum number of strobes on a circuit
  - 100 dB peak – multiple frequency tone improves wall penetration

Field Configurable Ceiling Horn-Strobes

Genesis Series

FM Pending MEA

One or more patents pending.



Application

Genesis strobes are UL 1971-listed for use indoors as ceiling-mounted public-mode notification appliances for the hearing impaired. Prevailing codes require strobes to be used where ambient noise conditions exceed 105 dBA (87dBA in Canada), where occupants use hearing protection, and in areas of public accommodation as defined in the *Americans with Disabilities Act (see application notes – USA)*.

Combination horn-strobe signals must be installed in accordance with guidelines established for strobe devices.

Strobes

Genesis strobes are UL 1971-listed for use indoors as wall-mounted public-mode notification appliances for the hearing impaired. Prevailing codes require strobes to be used where ambient noise conditions exceed specified levels, where occupants use hearing protection, and in areas of public accommodation. Consult with your Authority Having Jurisdiction for details.

All Genesis strobes exceed UL synchronization requirements (within 10 milliseconds other over a two-hour period) when used with a synchronization source. Synchronization is important in order to avoid epileptic sensitivity.

NOTE: The flash intensity of some visible signals may not be adequate to alert or waken occupants in the protected area. Research indicates that the intensity of strobe needed to awaken 90% of sleeping persons is approximately 100 cd. GE Security recommends that strobes in sleeping rooms be rated at at least 110 cd.

WARNING: These devices will not operate without electrical power. As fires frequently cause power interruptions, further safeguards such as backup power supplies may be required.

Horns

Genesis horn output reaches as high as 99 dB (peak) and features a unique multiple frequency tone that results in excellent wall penetration and an unmistakable warning of danger. All models may be configured for either coded or non-coded signal circuits. They can also be set for low dB output with a jumper cut that reduces horn output by about 5 dB.

The suggested sound pressure level for each signaling zone used with alert or alarm signals is at least 15 dB above the average ambient sound level, or 5 dB above the maximum sound level having a duration of at least 60 seconds, whichever is greater, measured 5 feet (1.5 m) above the floor. The average ambient sound level is, A-weighted sound pressure measured over a 24-hour period.

Doubling the distance from the signal to the ear will theoretically result in a 6 dB reduction of the received sound pressure level. The actual effect depends on the acoustic properties of materials in the space. A 3 dBA difference represents a barely noticeable change in volume.

Dimensions

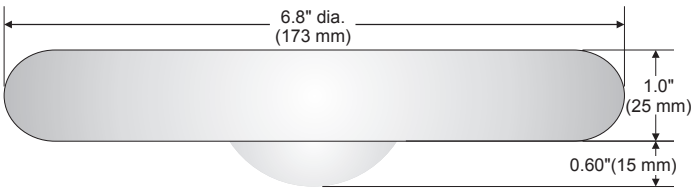

Installation and Mounting

All models are intended for indoor wall or ceiling applications only. Horn-strobes mount to any flush North-American 4" square electrical box.

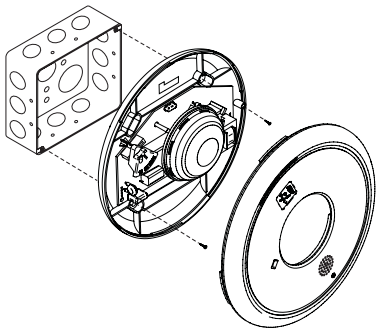

Genesis ceiling horn-strobes simply unlatch and twist to open. This gains access to mounting screws and the selectable candela switch. The shallow depth of Genesis devices leaves ample room behind the signal for extra wiring. Once installed with the cover in place, no mounting screws are visible.

GE Security recommends that these fire alarm horn-strobes always be installed in accordance with the latest recognized edition of national and local fire alarm codes.

Field Configuration

Depending on the model, Genesis horn-strobes may be set for 15 to 95, or 95 to 177 candela output (see ordering information). The output setting is changed by simply opening the device and sliding the switch to the desired setting. The horn-strobe does not have to be removed to change the output setting. The setting remains visible through a small window on the front of the device after the cover is closed.

The horn-strobe comes factory set for high dB output. Low dB output may be selected by cutting a jumper on the circuit board. This reduces the output by about 5 dB.

Wiring

Field wiring terminals accommodate #18 to #12 AWG (0.75 mm² to 2.5 mm²) wiring. Horn/strobes are interconnected with a single pair of wires as shown below.

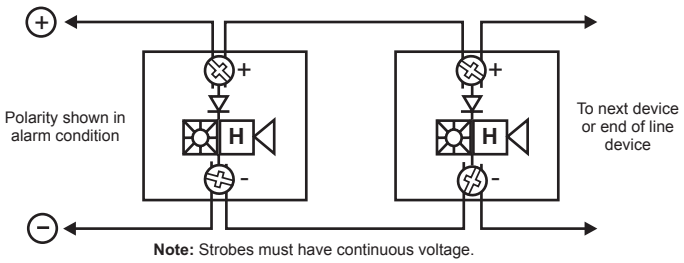

Note: Strobes must have continuous voltage.

Current Draw

GC-HDVM Temporal Horn-strobe: High dB Setting

UL Rating	15 cd RMS	30 cd RMS	75 cd RMS	95 cd RMS
16 Vdc	147	190	316	372
16 Vfwr	189	253	417	451

GC-HDVMH High cd Temporal Horn-strobe: High dB Setting

95 cd RMS	115 cd RMS	150 cd RMS	177 cd RMS
341	399	506	570
487	578	670	711

GC-HDVM Temporal Horn-strobe: High dB Setting

Typical Current	15 cd		30 cd		75 cd		95 cd	
	RMS	Mean	RMS	Mean	RMS	Mean	RMS	Mean
16 Vdc	111	95	152	143	281	276	333	328
20 Vdc	91	80	124	117	219	214	257	251
24 Vdc	80	71	108	101	185	180	212	207
33 Vdc	69	62	89	84	144	140	160	156
16 Vfwr	153	81	218	123	388	240	420	268
20 Vfwr	141	70	190	100	325	188	378	219
24 Vfwr	135	64	176	90	280	154	310	180
33 Vfwr	139	61	167	80	241	122	254	133

GC-HDVMH High cd Temporal Horn-strobe: High dB Setting

95 cd		115 cd		150 cd		177 cd	
RMS	Mean	RMS	Mean	RMS	Mean	RMS	Mean
324	322	377	374	477	474	554	551
258	256	299	296	369	366	417	414
220	217	252	249	304	301	341	338
172	169	188	185	223	220	244	241
463	265	535	312	665	400	718	442
392	211	439	240	517	287	587	334
346	179	382	212	458	246	498	271
296	142	323	152	358	178	387	194

GC-HDVM Temporal Horn-strobe: Low dB Setting

Typical Current	15 cd		30 cd		75 cd		95 cd	
	RMS	Mean	RMS	Mean	RMS	Mean	RMS	Mean
16 Vdc	108	91	149	139	275	269	327	322
20 Vdc	87	75	120	113	214	209	250	245
24 Vdc	76	66	103	97	180	175	205	201
33 Vdc	64	57	85	80	138	135	153	150
16 Vfwr	141	76	204	118	384	239	418	265
20 Vfwr	127	65	176	95	312	181	371	214
24 Vfwr	118	60	162	82	262	149	301	171
33 Vfwr	127	56	155	73	229	118	249	129

GC-HDVMH High cd Temporal Horn-strobe: Low dB Setting

95 cd		115 cd		150 cd		177 cd	
RMS	Mean	RMS	Mean	RMS	Mean	RMS	Mean
317	315	378	376	480	477	544	542
252	250	292	290	364	362	414	411
212	211	245	243	297	295	334	332
159	157	181	179	215	213	234	232
461	265	521	305	656	396	705	432
381	208	437	242	508	285	576	326
335	172	370	195	440	235	485	264
285	134	308	149	349	169	373	186

Notes and Comments

1. Current values are shown in mA.
2. UL Nameplate Rating can vary from Typical Current due to measurement methods and instruments used.
3. GE Security recommends using the Typical Current for system design including NAC and Power Supply loading and voltage drop calculations.
4. Use the Vdc RMS current ratings for filtered power supply and battery AH calculations. Use the Vfwr RMS current ratings for unfiltered power supply calculations.
5. Fuses, circuit breakers and other overcurrent protection devices are typically rated for current in RMS values. Most of these devices operate based upon the heating affect of the current flowing through the device. The RMS current (not the mean current) determines the heating affect and therefore, the trip and hold threshold for those devices.
6. Our industry has used 'mean' currents over the years. However, UL will direct the industry to use the 2004 RMS values in the future.

dBA output

High dB Setting	UL464		Average	Peak
	Temporal	Steady	Temporal/ Steady	Temporal/ Steady
16 Vdc	79.8	83.2	90.6	93.6
24 Vdc	83.3	85.4	93.6	96.6
33 Vdc	85	87.8	95.7	98.7

Low dB Setting	UL464		Average	Peak
	Temporal	Steady	Temporal/ Steady	Temporal/ Steady
16 Vdc	75	79.3	86.3	88.7
24 Vdc	78	83	88.8	92.4
33 Vdc	80.9	85.9	91.8	95.1

Notes
1. All values shown are dBA measured at 10 feet (3.01m); **2.** UL464 values measured in reverberation room; **3.** Average and Peak values are measured in anechoic chamber.

Light output - (effective cd)

Percent of UL rating versus angle

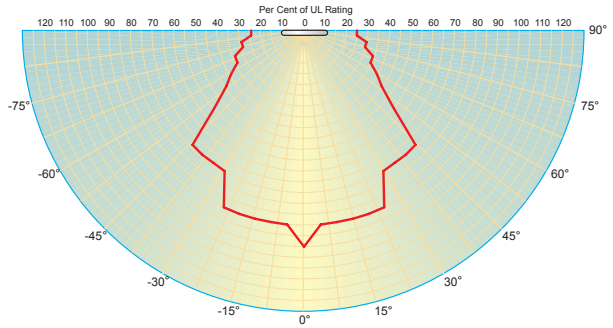

GE
Security

U.S.
T 888-378-2329
F 866-503-3996

Canada
T 519 376 2430
F 519 376 7258

Asia
T 852 2907 8108
F 852 2142 5063

Australia
T 61 3 9259 4700
F 61 3 9259 4799

Europe
T 32 2 725 11 20
F 32 2 721 86 13

Latin America
T 305 593 4301
F 305 593 4300

www.gesecurity.com/est

© 2007 General Electric Company
All Rights Reserved.

Genesis Series is a trademark of GE Security.

Specifications

Housing	Textured UV stabilized, color impregnated engineered plastic. Exceeds 94V-0 UL flammability rating. Red and white models available.
Lens	Optical grade polycarbonate (clear)
Mounting	North-American 4" square box, 2 1/8" (54 mm) deep (indoor wall or ceiling applications only).
Wire connections	Screw terminals: single input for both horn and strobe. #18 to #12 AWG (0.75 mm² to 2.5 mm²) wire size
Operating environment	Indoor: 32-120°F (0-49°C) ambient temperature. 93% relative humidity
Agency listings/approvals	Meets or exceeds ULC-S541, year 2004 UL requirements for standards UL1638 and UL1971, and complies with UL1480. All horn-strobes comply with ADA Code of Federal Regulation Chapter 28 Part 36 Final Rule. CSFM, MEA. FM pending.
Operating voltage	GC-HDVM series temporal-tone horn-strobes: non-coded, filtered 16-33 Vdc or unfiltered 16-33 Vdc FWR (or coded (audible NAC only) when used with optional G1M Genesis Signal Master)
Strobe output rating	UL 1971, UL 1638, ULC S526: selectable 15/30/75/95 cd (GC-HDVM) and 95/115/150/177 cd (GC-HDVMH)
Strobe flash rate	GC-HDVM series temporal-tone horn-strobes: one flash per second synchronized with optional G1M Genesis Signal Master indefinitely within 10 milliseconds (or self-synchronized within 200 milliseconds over thirty minutes on a common circuit without G1M Genesis Signal Master) Temporal setting (private mode only): synchronized to temporal output of horns on same circuit
Synchronization Sources	G1M-RM, SIGA-CC1S, SIGA-MCC1S, BPS6A, BPS10A
Horn pulse rate	GC-HDVM series temporal-tone horn-strobes: temporal rate synchronized with optional G1M Genesis Signal Master indefinitely within 10 milliseconds (or self-synchronized within 200 milliseconds over thirty minutes on a common circuit without G1M Genesis Signal Master)
Temporal audible pattern	½ sec ON, ½ sec OFF, ½ sec ON, ½ sec OFF, ½ sec ON, 1½ sec OFF, then repeat cycle

Ordering Information

Catalog Number	Housing Color	Marking	Description	Ship Wt. lbs (kg)
GC-HDVM	White	None	Genesis Ceiling/Wall Horn-Strobe with selectable 15, 30, 75, or 95 cd output	0.82 (1.8)
GCF-HDVM	White	"FIRE"		
GCFR-HDVM	Red	"FIRE"		
GC-HDVMH	White	None	Genesis Ceiling/Wall Horn-Strobe with selectable 95, 115, 150, or 177 cd output	
GCF-HDVMH	White	"FIRE"		

Accessories		
G1M-RM	Genesis Signal Master – Remote Mount (1-gang)	0.2 (0.1)
SIGA-CC1S	Intelligent Synchronization Output Module (2-gang)	0.5 (0.23)
SIGA-MCC1S	Intelligent Synchronization Output Module (Plug-in UIO)	0.18 (0.08)



White Field Configurable Ceiling Horn-Strobes may be ordered with or without optional 'FIRE' marking. Red Horn-Strobes come with 'FIRE" marking.

imagination at work