tyco SimplexGrinnell

Safer. Smarter. Tyco.™

3RD FLOOR PEDIATRICS RENOVATION
MEDICAL CENTER OF AURORA
FIRE ALARM SYSTEM

City of Aurora Building Division
Project: *Medical Center of Aurora*
Address: *1501 S POTOMAC ST*
Occupancy Group: *IBC I-2*
Construction Type: *IBC Type IA-SPK*
RSN: *1167880*
Permit: *2016-1214781-LT*

City of Aurora Building Division
Reviewed for Code Compliance
By: *Ted Cavness*
Date: *December 14, 2016*
2015 INTERNATIONAL CODES & 2014 NEC

Audible/Visual occupant notification device spacing shall be field verified for compliance in Public Use/Common Use Areas. Exam rooms and shared offices are examples of Public Use/ Common Use Areas. 2015 IFC 907.5

Items determined to be in violation of code during inspection are required to be corrected; this review does not grant approval of code violations.

Field Inspection consultation is available upon request; call (303) 739-7420 to schedule a consultation.

Deviation from reviewed plans may result in an hourly fee to review the field changes for code compliance.

DRAWING INDEX

Sheet Number	Sheet Title
General Information (FA-000 Series)	
FA-000	COVER SHEET
Floorplans (FA-100 Series)	
FA-101	3RD FLOOR CENTRAL TOWER A - DEVICE PLACEMENT PLAN
Risers (FA-200 Series)	
FA-201	PARTIAL RISER DIAGRAM
Calculations (FA-600 Series)	
FA-601	CALCULATIONS
Typical Details (FA-700 Series)	
FA-701	TYPICAL DETAILS

CITY OF AURORA CODE NOTES

- FIRE ALARM SYSTEMS CANNOT BE COMBINED WITH BURGLAR ALARM SYSTEMS.
- THE INSTALLER IS REQUIRED TO COORDINATE WITH THE MECHANICAL CONTRACTOR TO DETERMINE INSTALLATION OF SMOKE DETECTORS OR SENSORS (I.E., NOT CLOSER THAN 3 FEET FROM ANY SUPPLY/RETURN DIFFUSER AND THAT ADDITIONAL DETECTION MAY BE
- FIRE ALARM DEVICES MUST BE PLACED IN PROTECTED AREAS WITH AMBIENT TEMPERATURE RANGING FROM 32 DEGREES TO 120 DEGREES F.
- DO NOT PLACE SMOKE DETECTORS WITHIN 3 FEET OF AIR SUPPLY REGISTERS AND DIFFUSERS.
- FIRE ALARM SYSTEM SHALL BE MONITORED BY A CLASS I CENTRAL STATION.
- FIRE ALARM CONTROL PANEL WILL BE PLACED IN THE LOCATION SPECIFIED WITHIN THE PLAN SUBMITTAL UNLESS APPROVED BY THE LIFE SAFETY FIELD INSPECTOR.
- CITY OF AURORA BUILDING DIVISION DOES NOT GRANT APPROVAL FOR ANY VIOLATIONS OF ADOPTED FIRE CODE. CODE VIOLATIONS UNCOVERED DURING FIELD INSPECTIONS MUST BE CORRECTED.
- PER THE 2009 IFC AND THE 2011 NEC THE INSTALLER MUST REQUEST A ROUGH WIRING INSPECTION ON THE FIRE ALARM SYSTEM PRIOR TO REQUESTING A FIRE ALARM FINAL INSPECTION.
- THE CONTRACTOR SHALL CONDUCT A "PRE-TEST" OF THE PROJECT AREA PRIOR TO SCHEDULING AN ACCEPTANCE TEST WITH THE BUILDING DIVISION.
- REMOTE ALARM INDICATORS SHALL BE PROVIDED FOR ANY AUTOMATIC FIRE ALARM DETECTOR LOCATED IN A CONCEALED LOCATION WITH A NORMALLY LOCKED DOOR.
- AT THE TIME OF FINAL FIRE ALARM INSPECTION, THE SYSTEM MUST BE SUPERVISED/MONITORED BY A CLASS I CENTRAL MONITORING AGENCY.
- THE INSTALLING CONTRACTOR (OR DESIGNEE) MUST PROVIDE ALL NECESSARY TESTING EQUIPMENT AND PERFORM ALL TESTING REQUIRED BY THE LIFE SAFETY FIELD INSPECTOR.
- IN-DUCT SMOKE DETECTORS INSTALLED IN CONCEALED LOCATIONS OR, WHERE THE DETECTORS ALARM INDICATOR IS NOT READILY VISIBLE TO RESPONDING PERSONNEL SHALL BE PROVIDED WITH A REMOTE INDICATOR(S), REMOTE TEST STATION AND PERMENANT PLACARDING.
- ALL NEW OR EXISTING FIRE ALARM SYSTEMS MUST BE CONNECTED TO ANY EXTERIOR HORN AND STROBE DEVICE. IF THE BUILDING IS FIRE SPRINKLED, A GENERAL ALARM ACTIVATION AT THE FIRE ALARM CONTROL PANEL WILL ACTIVATE THE EXTERIOR HORN AND STROBE. SILENCING THE PANEL MUST ALLOW THE VISUAL DEVICE TO CONTINUE UNTIL THE PANEL IS RESET.
- FIRE ALARM SYSTEMS SHALL INCLUDE BOTH AUDIBLE AND VISUAL ALARMS. VISUAL ALARMS WILL BE REQUIRED IN ALL ACCESSIBLE PUBLIC AND COMMON-USE AREAS PER THE 2009 IFC AND THE 2003 ANSI A117.1 STANDARD.
- PROVIDE A PRIMARY AND SECONDARY POWER SUPPLY FOR THE FIRE ALARM SYSTEM PER THE 2009 IFC AND THE 2007 NFPA 72.
- THE FIRE ALARM INSTALLATION CONTRACTOR MUST COMPLETE THE NFPA 72 "RECORD OF COMPLETION" PRIOR TO SCHEDULING THE AHJ ACCEPTANCE TEST.
- FIELD INSPECTION CONSULTATION IS AVAILABLE UPON REQUEST. CALL 303-739-7420 TO REQUEST CONSULTATION.
- AUDIBLE ALARM SIGNALING DEVICES SHALL EXCEED THE PREVAILING SOUND LEVEL IN A ROOM OR SPACE BY 15 DBA. SOUND LEVELS FOR ALARM SIGNALS SHALL BE 120 DBA MAXIMUM. 2009 IFC SECTION 907.10.2.

MONITORING SERVICE

CENTRAL STATION MONITORING SERVICE:

SIMPLEXGRINNELL
50 TECHNOLOGY DRIVE
WESTMINSTER, MA 01441
1 (888) 746-7539

NICET CERTIFICATION

NICET CERTIFICATION

TECHNICAL AREA 00303: LEVEL 3
CERTIFICATE #: 83242
VALID THROUGH: 10/01/17

STEVE SHARP — 11/29/16 DATE

GENERAL NOTES

1. THESE DRAWINGS DEPICT GENERAL LOCATIONS OF LIFE SAFETY EQUIPMENT & FIELD DEVICES. EXACT ROUTING OF CONDUITS IS TO BE DETERMINED IN THE FIELD BY THE INSTALLING CONTRACTOR TO SUIT CONDITIONS. ALL CHANGES SHALL BE CLEARLY INDICATED ON THE RECORD DRAWINGS.
2. SHOULD ANY CONDITIONS EXIST THAT DIFFER FROM WHAT IS INDICATED ON THESE DRAWINGS WHICH CAUSE MAJOR DEVIATIONS IN THE WORK SHOWN, THE CONTRACTOR SHALL CONTACT TYCO SIMPLEXGRINNELL IN A TIMELY MANNER SO AS NOT TO IMPAIR THE CONSTRUCTION SCHEDULE.
3. CONTRACTOR IS RESPONSIBLE FOR MAKING AND OBTAINING APPROVAL FOR ALL NECESSARY ADJUSTMENTS IN CIRCUITING AS REQUIRED TO ACCOMMODATE THE RELOCATION OF EQUIPMENT AND/OR DEVICES WHICH ARE AFFECTED BY ANY AUTHORIZED CHANGE. ALL CHANGES SHALL BE CLEARLY INDICATED ON THE RECORD DRAWINGS.
4. A STAMPED SET OF APPROVED FIRE ALARM DRAWINGS SHALL BE AT THE JOB SITE AND SHALL BE USED FOR INSTALLATION.
5. THE POWER CIRCUIT TO THE FACP AND TO THE FIRE ALARM POWER SUPPLIES SHALL BE ON A DEDICATED 120V, 20A BRANCH CIRCUIT BREAKER, AND SHALL HAVE A RED MARKING, LOCK-ON PROVISION AND SHALL BE IDENTIFIED AS "FIRE ALARM CIRCUIT CONTROL." THE LOCATION OF THE CIRCUIT DISCONNECT MEANS (CIRCUIT BREAKER) SHALL BE PERMANENTLY IDENTIFIED AT THE FIRE ALARM CONTROL UNIT.
6. UPDATE THE AS-BUILT DRAWING SET DAILY WITH JOB PROGRESS. RETURN THE AS-BUILT DRAWING SET TO TYCO SIMPLEXGRINNELL NO LATER THAN 7 DAYS AFTER FINAL TEST.
7. THE CONTRACTOR WILL MAINTAIN ALL AREAS OF THE BUILDING IN A NEAT AND WORKMANLIKE MANNER.
8. DO NOT APPLY POWER EXCEPT IN THE PRESENCE OF A FACTORY TRAINED TYCO SIMPLEXGRINNELL TECHNICAL REPRESENTATIVE.
9. ANY SMOKE DETECTOR HEAD INSTALLED BEFORE THE BUILDING IS CLEANED AND ACCEPTED SHALL BE COVERED TO PROTECT FROM DUST. ANY FALSE ALARMS DUE TO DIRT CONTAMINATED HEADS SHALL BE THE RESPONSIBILITY OF THE FIRE ALARM INSTALLER.
10. THE FIRE ALARM INSTALLER WILL MAINTAIN THE FIRE RESISTANCE INTEGRITY OF ALL WALL, CEILING, AND ROOF ASSEMBLIES ANY TIME THAT WORK IS NOT ACTIVELY BEING PERFORMED.
11. INSTALLATION OF DEVICES SHALL BE IN ACCORDANCE WITH MANUFACTURER'S INSTRUCTIONS. POWER LIMITED AND NON-POWER LIMITED FIELD WIRING MUST BE INSTALLED WITHIN THE FACP ENCLOSURE IN ACCORDANCE WITH MANUFACTURER'S INSTRUCTIONS AND APPLICABLE ELECTRICAL CODES. REFER TO 'APPLICABLE CODES & STANDARDS' FOR SPECIFIC CODE REFERENCES.
12. ALL WIRING SHALL BE INSTALLED ACCORDING TO APPLICABLE ELECTRICAL CODES.
13. FIRE ALARM CIRCUITS SHALL BE IDENTIFIED IN ACCORDANCE WITH APPLICABLE ELECTRICAL CODES. MARK ALL FIRE ALARM WIRES IN ACCORDANCE WITH APPLICABLE ELECTRICAL CODE SECTIONS FOR POWER LIMITED AND NON-POWER LIMITED WIRE.
14. FIRE ALARM CABLE INSTALLED IN DUCTS, PLENUM, AND OTHER SPACES USED FOR ENVIRONMENTAL AIR SHALL BE TYPE FPLP.
15. FIRE ALARM CABLE INSTALLED IN THE VERTICAL RUNS AND PENETRATING MORE THAN ONE FLOOR OR CABLES INSTALLED IN VERTICAL RUNS IN SHAFTS SHALL BE TYPE FPLR.
16. FIRE ALARM CABLE INSTALLED IN UNDERGROUND CONDUIT OR OTHER WET LOCATIONS SHALL BE UL LISTED FOR WET LOCATIONS.
17. FIRE ALARM CIRCUITS EXTENDING BEYOND ONE BUILDING AND RUN OUTDOORS SHALL BE INSTALLED IN ACCORDANCE APPLICABLE ELECTRICAL CODES, WHERE APPLICABLE.
18. ALL WIRING, INCLUDING SHIELDS MUST BE DRY AND FREE OF SHORTS AND GROUNDS.
19. ALL SHIELDED WIRE MUST HAVE SHIELD CONTINUITY AT FULL LENGTH OF THE WIRE.
20. ONLY SYSTEM WIRING CAN BE RUN IN THE SAME CONDUIT.
21. 120VAC IS NOT PERMITTED IN THE SAME CONDUIT WITH LOW VOLTAGE WIRING.
22. MAINTAIN MAXIMUM CONDUIT FILL RATIO AS PER APPLICABLE ELECTRICAL CODES REQUIREMENTS.
23. EXISTING CONDUITS MAY BE USED BY THE INSTALLATION CONTRACTOR AS DEEMED NECESSARY; HOWEVER, ANY EXISTING CONDUIT WILL BE USED ONLY IF CONDUITS MEET CURRENT STANDARDS AND CODES. TYCO SIMPLEXGRINNELL MAKES NO STATEMENTS WRITTEN OR VERBAL AS TO THE CONDITION OF EXISTING CONDUITS.

LEGENDS

FIRE ALARM SYMBOL LEGEND

SYMBOL	DESCRIPTION	BRAND	MODEL	BOX CODE	WIRE TYPE
NAC#	4009 NAC EXTENDER PANEL, BEIGE, 120 VAC	SIMPLEX	4009-9001	MFG	
F	DOUBLE ACTION MANUAL PUSH/PULL STATION	SIMPLEX	4099-9006	4G 1E	M
WG	PHOTOELECTRIC SMOKE SENSOR WITH STANDARD BASE WG = SECURITY VANDAL GUARD, SIMPLEX 4098-9846	SIMPLEX	4098-9714 HEAD 4098-9792 BASE	4A 4K	M
	HEAT SENSOR - ROR - NON ADDRESSABLE 135° WITH RELAY BASE 2-WIRE	SIMPLEX	4098-9613 HEAD 4098-9788 BASE	4A 1B	Z R
AIM	INDIVIDUAL ADDRESSABLE MODULE	SIMPLEX	4090-9001	1F	M Z
IOM	RELAY IAM	SIMPLEX	4090-9002	4H	M R
	ENCAPSULATED RELAY PAM-1, SPDT W/ LED, APOLLO AMERICA INC PAM-1	SIMPLEX	2088-9021	1D	R
	EXISTING CHIME/STROBE, WALL MOUNT	SIMPLEX	EXISTING		V
	MULTI-CANDELA CHIME/STROBE, WALL MOUNT, RED, FIRE, CLEAR LENS	SIMPLEX	4906-9133	4A 1B	V
STI	STROBE, WALL MOUNT, RED, FIRE, CLEAR LENS STI = STOPPER DOME, STI-1219	SIMPLEX	4906-9101	1A 4A	V
DH	DOOR HOLD	SIMPLEX	DH24120FC		

CODE	BOX SPECIFICATIONS	CODE	BOX SPECIFICATIONS
4A	4" SQ. BOX 1 1/2" DEEP	1F	SINGLE GANG BOX 2 1/2" DEEP W/COVER
4B	4" SQ. BOX 1 1/2" DEEP W/ COVER	1G	SINGLE GANG BOX 2 3/4" DEEP
4C	4" SQ. BOX 1 1/2" DEEP W/ 1 1/2" EXT. RING	1H	SINGLE GANG BOX 3 1/2" DEEP
4D	4" SQ. BOX 2 1/8" DEEP	2A	DOUBLE GANG BOX 2" DEEP
4E	4" SQ. BOX 2 1/8" DEEP W/ COVER	2B	TWO GANG BOX 2 1/2" DEEP
4F	4" SQ. BOX 2 1/8" DEEP W/ 1 1/2" EXT. RING	2C	TWO GANG BOX 2 3/4" DEEP
4G	4" SQ. BOX 2 1/8" DEEP W/ SINGLE GANG COVER	HB	HANDY BOX 1 1/2" DEEP
4H	4" SQ. BOX 2 1/8" DEEP W/ TWO GANG COVER	6A	6 SINGLE GANG BOXES 3 1/2" DEEP
4J	4" SQ. BOX 2 1/2" DEEP	6B	6 GANG BOX
4K	4" OCT. BOX 1 1/2" DEEP	6C	6 GANG BOX 2 1/2" DEEP
4L	4" OCT. BOX 1 1/2" DEEP W/ 1 1/2" EXT. RING	6D	6 GANG BOX 3 1/2" DEEP
4M	4 11/16" SQ. BOX 2 1/8" DEEP	FBO	FURNISHED BY OTHERS
4N	4 11/16" SQ. BOX 1 1/2" DEEP W/ 1 1/2" EXT. RING	MFG	SUPPLIED BY MANUFACTURER
4P	4 11/16" SQ. BOX 2 1/8" DEEP W/ 1 1/2" EXT. RING	MDW	MOUNTS TO DUCTWORK
1A	SINGLE GANG BOX 1 1/2" DEEP	MBD	MOUNTS IN BOX BEHIND DETECTOR
1B	SINGLE GANG BOX 2" DEEP	WM	WALL MOUNT
1C	SINGLE GANG BOX 2 1/8" DEEP	DT	DESK TOP MOUNT
1D	SINGLE GANG BOX 2 1/8" DEEP W/COVER	NR	NO BACKBOX REQUIRED
1E	SINGLE GANG BOX 2 1/2" DEEP	TRM	3.5" WIDE SNAP TRACK W/MOUNTING SCREWS

FOR ADDITIONAL BACK BOX OPTIONS, REFER TO THE XX-700 SERIES DRAWINGS OR PRODUCT DATA SHEETS AND INSTALLATION INSTRUCTIONS.

FIRE ALARM WIRE LIST

CIRCUIT DESCRIPTION		CONSTRUCTION	GAUGE	CIRCUIT PROPERTIES	ACCEPTABLE CABLE TYPES			
					FPLR	THHN / TFFN	FPLP	OUTDOOR
V	VISUAL SIGNAL	2 COND. SOLID	14 AWG		X	X	X	
B	RUI= COMMUNICATION	UTP SOLID	18 AWG	60pf/ft. MAX CAPACITANCE; 3 twists/ft. RECOMMENDED	X		X	
D	DOOR HOLDER	TP SOLID	14 AWG		X	X	X	
K	REMOTE TEST SWITCH/LED	(2) 2 COND. SOLID	14 AWG		X	X	X	
M	IDNET	UTP SOLID	18 AWG		X		X	
P	POWER	2 COND. SOLID	14 AWG		X	X	X	
R	RELAY	2 COND. SOLID	14 AWG		X	X	X	
Z	ZONE (IDC)	2 COND. SOLID	16 AWG		X	X	X	

CONDUIT SIZE	MAX CONDUCTOR AREA	CONDUIT SIZE	MAX CONDUCTOR AREA	NOTES
1/2" 3/4" 1"	0.12 SQ INCH * 0.21 SQ INCH * 0.34 SQ INCH *	1-1/4" 1-1/2" 2"	0.60 SQ INCH * 0.82 SQ INCH * 1.34 SQ INCH *	*40% FILL PER N.E.C. SUBSCRIPT "s": UNSHIELDED CABLES MIXED WITH SHIELDED CABLES OF SAME CIRCUIT DESIGNATION.

**OUTDOOR AERIAL CABLE REQUIRES MESSENGER

ITEMS SUCH AS CAPACITANCE BETWEEN CONDUCTORS AND WIRE GAUGE CAN BE CRUCIAL TO THE CIRCUIT DESIGN OF THIS SYSTEM INSTALLATION. THE INSTALLING CONTRACTOR IS RESPONSIBLE FOR SELECTING AND INSTALLING CABLE MANUFACTURER AND MODEL THAT MEETS OR EXCEEDS THE ABOVE REQUIREMENTS. RECOMMENDED CABLE MANUFACTURERS AND MODEL NUMBERS ARE AVAILABLE UPON REQUEST.

PROJECT DIRECTORY

Site
MEDICAL CENTER OF AURORA
1501 S. POTOMAC ST.
AURORA, CO 80012

Tyco SimplexGrinnell District - 419
14200 E. EXPOSITION AVE
AURORA, CO 80012
PHONE: 303-355-0500
FAX: 303-355-0615
SERVICE: 303-355-0500

Engineer Of Record
PATH 21 ARCHITECTURE
2245 CURTIS ST. STE. 100
DENVER, CO 80205

Installer
SIMPLEXGRINNELL LP
14100 E. EXPOSITION AVE.
AURORA, CO 80012

General Contractor
MC2 ELECTRIC
98 LIPAN ST.
DENVER, CO 80223

Owner
MEDICAL CENTER OF AURORA
1501 S. POTOMAC ST.
AURORA, CO 80012

SCOPE OF WORK

MODIFY EXISTING FIRE ALARM SYSTEM:

PROJECT CONSISTS OF RENOVATION OF 3RD FLOOR PEDIATRIC UNIT CARRYING A MIX OF COSMETIC AND FULL RENOVATION. PROJECT CONSISTS OF APPROXIMATELY 4500 SF. SIMPLEXGRINNELL WILL PROVIDE NEW DEVICES, RELOCATE AND DEMO EXISTING DEVICES AS SHOWN ON THE DRAWINGS.

ALL NEW WIRING TO BE CLASS B.

THE EXISTING FIRE ALARM SYSTEM SHALL NOT BE DISCONNECTED OR TAKEN OUT OF SERVICE WITHOUT WRITTEN PERMISSION FROM THE OWNER. IT IS THE CONTRACTOR'S RESPONSIBILITY TO COORDINATE WITH THE OWNER THE TIMING OF ANY EXISTING FIRE ALARM SYSTEM DEMOLITION WORK.

ABBREVIATIONS LEGEND

AC	= ABOVE CEILING	HT	= HEIGHT
C	= CEILING MOUNTED	HVAC	= HEATING, VENTILATION, & AIR CONDITIONING
E	= EXISTING TO REMAIN	IMS	= INFORMATION MANAGEMENT SYSTEM
RC	= EXISTING TO REMOVE AND COVER	MAX	= MAXIMUM
RD	= EXISTING DEVICE TO BE RELOCATED	MIN	= MINIMUM
RL	= RELOCATED DEVICE	N/A	= NOT APPLICABLE
RR	= REMOVE EXISTING AND REPLACE W/NEW	NAC	= NOTIFICATION APPLIANCE CIRCUIT EXTENDER
WP	= WEATHERPROOF	NDU	= NETWORK DISPLAY UNIT
XP	= EXPLOSION PROOF	NEC	= NATIONAL ELECTRICAL CODE
H	= HIGH HUMIDITY	NFPA	= NATIONAL FIRE PROTECTION ASSOCIATION
AFF	= ABOVE FINISHED FLOOR	NIC	= NOT IN CONTRACT
AHJ	= AUTHORITY HAVING JURISDICTION	NPU	= NETWORK PROCESSING UNIT
ALM	= ALARM	NTS	= NOT TO SCALE
ANN	= ANNUNCIATOR	PAP	= PRE-ACTION PANEL
BMS	= BUILDING MANAGEMENT SYSTEM	SCC	= STATUS COMMAND CENTER
CBC	= CALIFORNIA BUILDING CODE	SLC	= SIGNALING LINE CIRCUIT
CD	= (eg. 15CD) CANDELA	SMK	= SMOKE
CSFM	= CALIFORNIA STATE FIRE MARSHAL	SUPV	= SUPERVISORY
DET	= DETECTOR	TAC	= TRUEALERT ADDRESSABLE CONTROLLER
DGP	= DATA GATHERING PANEL	TRBL	= TROUBLE
EOL	= END OF LINE	TS	= TAMPER SWITCH
EPO	= EMERGENCY POWER OFF	TYP	= TYPICAL
FACP	= FIRE ALARM CONTROL PANEL	UON	= UNLESS OTHERWISE NOTED
FATC	= FIRE ALARM TERMINAL CABINET	VCC	= VOICE COMMAND CENTER
FBO	= FURNISHED BY OTHERS	VT	= VALVE TAMPER
FCC	= FIRE COMMAND CENTER	WF	= WATER FLOW
FAA	= FIRE ALARM ANNUNCIATOR	W	= (eg. 1/2W) WATT
FTR	= FIRE ALARM TRANSPONDER	W/	= WITH
FSD	= FIRE SMOKE DAMPER	W/O	= WITH OUT

TYCO SimplexGrinnell CONTACTS

Drawings Prepared By
ROBERT VARGAS
RVARGAS@SIMPLEXGRINNELL.COM
PHONE: 281-671-3300

Project Manager
R. NEIFERT
RNEIFERT@SIMPLEXGRINNELL.COM
PHONE: 719-574-4215

Drawings Reviewed By
STEVEN SHARP
SSHARP@SIMPLEXGRINNELL.COM
PHONE: 719-799-2148

APPLICABLE CODES & STANDARDS

JURISDICTIONS WITHIN THE STATE MAY HAVE AMENDMENTS TO THE STATE ADOPTED CODE. CHECK WITH THE LOCAL JURISDICTION AUTHORITY FOR MORE DETAILS.
CITY OF AURORA:
2015 INTERNATIONAL BUILDING CODE (IBC)
2015 INTERNATIONAL EXISTING BUILDING CODE
2014 NATIONAL ELECTRICAL CODE (NEC)
2015 INTERNATIONAL MECHANICAL CODE
2015 INTERNATIONAL PLUMBING CODE
2015 INTERNATIONAL FIRE CODE
2015 INTERNATIONAL FUEL AND GAS CODE
2015 INTERNATIONAL ENERGY CONSERVATION CODE
2009 ICC/ANSI A117.1 ACCESSIBLE USABLE BUILDINGS AND FACILITIES
STATE OF COLORADO:
2012 NFPA 101 - LIFE SAFETY CODE
2009 CO DEPARTMENT OF HEALTH AND ENVIRONMENT - HOSPITAL LICENSING RULES
FEDERAL:
2010 AMERICANS WITH DISABILITIES ACT GUIDELINES

COA Adopted Codes for this project:
ICC-2015 - NEC-2014
NFPA 13-2013 - NFPA 72-2013
COA Amendments 22 & 66

OCCUPANCY TYPE(S):
2015 IBC - GROUP I-2 (SECTION 308)
CMS - 2012 NFPA 101 - NEW HEALTHCARE OCCUPANCY (CHAPTER 18)
STATE OF COLORADO - 2012 NFPA 101 - NEW HEALTHCARE OCCUPANCY CHAPTER 18
PRINCIPAL OCCUPANCY TYPE: HEALTHCARE

SPRINKLER PROTECTION:
EXISTING: SBC - TYPE 1A, UNRESTRAINED, FULLY SPRINKLERED
NEW: 2015 IBC - TYPE 1A, FULLY SPRINKLERED

DEVICE TAG LEGEND

1:T2:A2:1-1(E1:1)

PANEL DESIGNATOR:
- FA: = FACP (NON-NETWORK)
- #: = NODE NUMBER
- T#: = TRANSPONDER NUMBER
- #:T# = NODE:TRANSPONDER NUMBER
- N#: = NAC EXTENDER NUMBER

CIRCUIT DESIGNATOR:
- A#:# = EPS NUMBER:EPS CHANNEL NUMBER
- D# = DOOR HOLDER CIRCUIT NUMBER
- F# = FIRE PHONE CIRCUIT
- H# = AUDIBLE (HORN) CIRCUIT NUMBER
- M# = IDNET LOOP NUMBER
- P# = POWER CIRCUIT NUMBER
- S# = SPEAKER CIRCUIT NUMBER
- V# = VISUAL CIRCUIT NUMBER
- Z# = ZONE NUMBER

DEVICE NUMBER

BRANCH / ISOLATED LOOP DESIGNATOR:
- (L#) = IDNET ISOLATED LOOP NUMBER
- (#) = IDNAC BRANCH NUMBER
- (E#:#) = ENHANCED POWER REPEATER NUMBER:BRANCH NUMBER

SYSTEM SEQUENCE OF OPERATIONS

SYSTEM INPUTS	CONTROL UNIT ANNUNCIATION													NOTIFICATION												FIRE SAFETY CONTROL												NEW SURGERY RENOVATIONS												REMARKS
	SYSTEM OUTPUTS																																																
	A	B	C	D	E	F	G	H	I	J	K	L	M	N	O	P	Q	R	S	T	U	V	W	X	Y	Z	AA	AB	AC	AD	AE	AF	AG																	
1 SMOKE SENSOR/DETECTOR	•	•					•	•	•		•	•	•		•									•	•	•	•																							1
2 MANUAL PULL STATION	•	•					•	•	•		•	•	•		•									•		•	•																							2
3 HEAT SENSOR/DETECTOR	•	•					•	•	•		•	•	•		•									•		•	•																							3
4 DUCT SENSOR/DETECTOR			•	•		•						•		•								•	•	•																									4
5 MAIN FLR. ELEV. LOBBY SMOKE DETECTOR	•	•					•	•	•		•	•	•		•	•	•		•					•		•	•																							5
6 ELEVATOR LOBBY SMOKE DETECTORS (EXC. MAIN FLR.)	•	•					•	•	•		•	•	•		•	•	•	•						•		•	•																							6
7 ELEVATOR MECH. ROOM HEAT DETECTOR	•	•					•	•	•		•	•	•		•	•	•							•		•	•																							7
8 ELEVATOR MECH. ROOM SMOKE DETECTOR	•	•					•	•	•		•	•	•		•	•	•	•						•		•	•																							8
9 ELEVATOR SHAFT HEAT DETECTOR	•	•					•	•	•		•	•	•		•	•	•							•		•	•																							9
10 WATERFLOW SWITCH	•	•					•	•	•	•	•	•	•		•									•		•	•																							10
11 TAMPER SWITCH			•	•			•				•			•										•																									11
12 POST INDICATOR VALVE SWITCH			•	•			•				•			•										•																									12
13 FIRE ALARM AC POWER FAILURE					•	•					•				•	•	•							•																									13
14 FIRE ALARM SYSTEM LOW BATTERY					•	•					•				•									•																									14
15 OPEN CIRCUIT OR GROUND FAULT					•	•					•				•									•																									15
16 CLASS B NOTIFICATION CIRCUIT (NAC) — SHORT					•	•					•				•									•																									16
17 SIGNAL SILENCE											•																																						17
18 SMOKE SENSOR/DETECTOR IN SMOKE COMPARTMENT	•	•					•	•	•		•	•	•		•									•	•	•	•	•	•																			18
19 HEAT SENSOR/DETECTOR IN SMOKE COMPARTMENT	•	•					•	•	•		•	•	•		•									•	•	•	•	•	•																			20
20 MANUAL PULL STATION IN SMOKE COMPARTMENT	•	•					•	•	•		•	•	•		•									•	•	•	•	•	•																			21
21 DUCT SENSOR/DETECTOR AT EXH. FSD			•	•			•					•		•										•						•																			22
22 DUCT SENSOR/DETECTOR AT SUP. FSD			•	•			•					•		•										•							•																		23
23 DUCT SENSOR/DETECTOR AT RET. FSD			•	•			•					•		•										•								•																	24
24 DUCT SENSOR/DETECTOR AT FAN SUPPLY			•	•			•					•		•										•									•																25
25 DUCT SENSOR/DETECTOR AT FAN RETURN			•	•			•					•		•										•										•															26
26 DUCT SENSOR/DETECTOR AT FAN OUTSIDE AIR			•	•			•					•		•										•											•														27
	A	B	C	D	E	F	G	H	I	J	K	L	M	N	O	P	Q	R	S	T	U	V	W	X	Y	Z	AA	AB	AC	AD	AE	AF	AG																	

NOTES:
NO CHANGES TO EXISTING SEQUENCE OF OPERATIONS PER CURRENT SCOPE OF WORK.

New and existing fire sprinkler systems shall activate exterior horn/ strobe upon both general alarm and flow switch activation. When fire alarm panel is silenced, the interior and exterior strobes will continue until fire alarm panel is reset.

tyco SimplexGrinnell
Safer. Smarter. Tyco.™
DISTRICT 419
DENVER-EXPOSITION AVE
AURORA, CO 80012
SERVICE: 303-355-0500
PHONE: 303-355-0500
FAX: 303-355-0615

3RD FLOOR PEDIATRICS RENOVATION
MEDICAL CENTER OF AURORA
1501 S. POTOMAC ST.
AURORA, CO 80012

ISSUE LOG						
MARK	DATE	CAD REV	CHK SC	DESCRIPTION		
1	11/17/16			SUBMITTED FOR REVIEW		

Revisions shown with △ symbol

DRAWN BY: R.V.
CHECKED BY: S.S.
ISSUE DATE: 11/17/16
JOB #: 16-018
PROJECT #: 419.991184502

TYCO SIMPLEXGRINNELL © 2016

SYSTEM: FIRE ALARM SYSTEM

SHEET: COVER SHEET

FA-000

IMPORTANT NOTICE TO USER: By accepting or using this drawing and/or the information contained hereon, the user agrees to the following terms and conditions: This electronic information is the property of Tyco SimplexGrinnell and is loaned subject to return upon demand. It is not to be used in whole or in part for any purpose detrimental to the interests of Tyco SimplexGrinnell and is not to be used on any other project without the written consent of Tyco SimplexGrinnell. It is not to be loaned, copied or given to any unauthorized individual without the written consent of Tyco SimplexGrinnell. Unauthorized use of this information shall be deemed to be in violation of the common law copyright and other property rights of Tyco SimplexGrinnell. Any use, reuse, copying, modification or alteration of the information contained hereon shall be at the sole risk of the user. This information may not be sold or transferred to any third party, used on other projects or additions to the project for which it was prepared, or used for completion of this project by any third party. SimplexGrinnell disclaims all liability for the use or reuse of this information by any third party and for any damages or losses arising from any such use or reuse.

FILE PATH: C:\Users\tomaldem\Box Sync\Med Ctr of Aurora\21 - Cath Lab Expansion - 2016 - 991184502\3rd Floor Peds Reno\Cath Lab Peds Reno\Working Drawings\FA-000.dwg
LAST SAVED BY: tomaldem
LAST PRINTED: 11/29/2016 4:10:36 PM
36" X 42" - Arch E1 Site

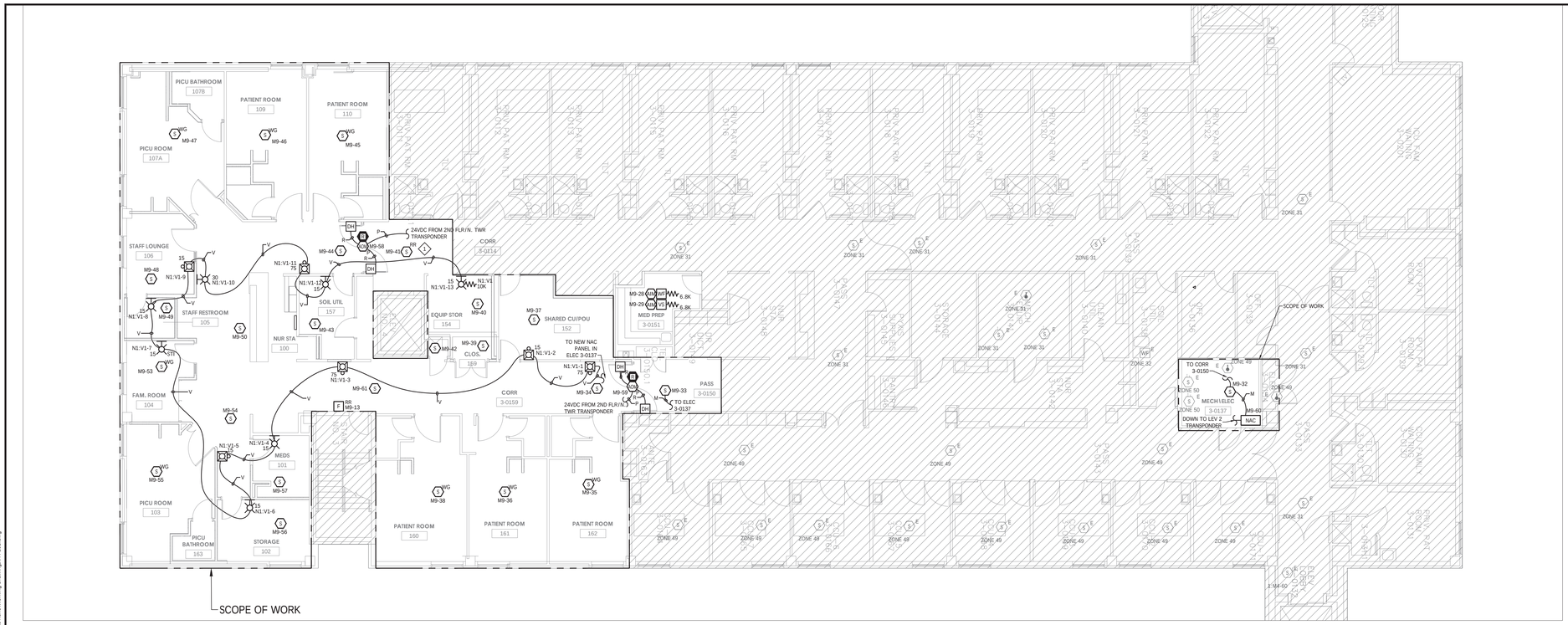

City of Aurora Building Division
Project: *Medical Center of Aurora*
Address: *1501 S POTOMAC ST*
Occupancy Group: *IBC I-2*
Construction Type: *IBC Type IA-SPK*
RSN: *1167880*
Permit: *2016-1214781-LT*

City of Aurora Building Division
Reviewed for Code Compliance
By: *Ted Caviness*
Date: *December 14, 2016*
2015 INTERNATIONAL CODES & 2014 NEC

3RD FLOOR CENTRAL TOWER A - DEVICE PLACEMENT PLAN

SCALE: 1/8" = 1'-0"
0 4 8 16
(IN FEET)

GENERAL NOTES:

1. ALL CEILINGS ARE ASSUMED TO BE 10' A.F.F., SMOOTH CONSTRUCTION UNLESS NOTED OTHERWISE.
2. ALL NOTIFICATION APPLIANCE CANDELA INTENSITY PLUGS SHALL RETAIN THEIR FACTORY SETTING OF "FACP" UNLESS OTHERWISE DIRECTED BY THE AUTHORITY HAVING JURISDICTION.
3. FINAL WIRE ROUTES TO BE PROVIDED ON RECORD DRAWINGS.

KEYNOTES:

1. **MOVE DEVICE TO NEW CIRCUIT FROM LEVEL 2 TRANSPONDER, M9.**
2. **REPLACE EXISTING SMOKES WITH TEMPORARY HEATS FOR INTERIM LIFE SAFETY. WHEN NEW DEVICES ARE OPERABLE AND CONSTRUCTION AREA IS COMPLETE DEMO INTERIM LIFE SAFETY HEAT DETECTORS AND WIRING. CUT BACK ZONE 31 WIRING TO EXISTING HEAT DETECTORS AND RELOCATE EOLR.**
3. **EXISTING CHIME/STROBE TO REMAIM FOR INTERIM LIFE SAFETY. WHEN NEW DEVICES ARE OPERABLE AND CONSTRUCTION AREA IS COMPLETE DEMO INTERIM LIFE SAFETY EXISTING CHIME/STROBE AND WIRING. CUT BACK WIRING TO EXISTING CHIME/STROBE AND RELOCATE EOLR.**

FIRE ALARM SYMBOL LEGEND

SYMBOL	DESCRIPTION	BRAND	MODEL	BOX CODE	WIRE TYPE
NAC#	4009 NAC EXTENDER PANEL, BEIGE, 120 VAC	SIMPLEX	4009-9001	MFG	
F	DOUBLE ACTION MANUAL PUSH/PULL STATION	SIMPLEX	4099-9006	4G 1E	M
S WG	PHOTOELECTRIC SMOKE SENSOR WITH STANDARD BASE WG = SECURITY VANDAL GUARD, SIMPLEX 4098-9846	SIMPLEX	4098-9714 HEAD 4098-9792 BASE	4A 4K	M
H	HEAT SENSOR - ROR - NON ADDRESSABLE 135° WITH RELAY BASE 2-WIRE	SIMPLEX	4098-9613 HEAD 4098-9788 BASE	4A 1B	Z R
AIM	INDIVIDUAL ADDRESSABLE MODULE	SIMPLEX	4090-9001	1F	M Z
XOM P	RELAY IAM	SIMPLEX	4090-9002	4H	M R
M	ENCAPSULATED RELAY PAM-1, SPDT W/ LED, APOLLO AMERICA INC PAM-1	SIMPLEX	2088-9021	1D	R
	EXISTING CHIME/STROBE, WALL MOUNT	SIMPLEX	EXISTING		V
	MULTI-CANDELA CHIME/STROBE, WALL MOUNT, RED, FIRE, CLEAR LENS	SIMPLEX	4906-9133	4A 1B	V
STI	STROBE, WALL MOUNT, RED, FIRE, CLEAR LENS STI = STOPPER DOME, STI-1219	SIMPLEX	4906-9101	1A 4A	V
DH	DOOR HOLD	SIMPLEX	DH24120FC		

CODE	BOX SPECIFICATIONS	CODE	BOX SPECIFICATIONS
4A	4" SQ. BOX 1 1/2" DEEP	1F	SINGLE GANG BOX 2 1/2" DEEP W/COVER
4B	4" SQ. BOX 1 1/2" DEEP W/ COVER	1G	SINGLE GANG BOX 2 3/4" DEEP
4C	4" SQ. BOX 1 1/2" DEEP W/ 1 1/2" EXT. RING	1H	SINGLE GANG BOX 3 1/2" DEEP
4D	4" SQ. BOX 2 1/8" DEEP	2A	DOUBLE GANG BOX 2" DEEP
4E	4" SQ. BOX 2 1/8" DEEP W/ COVER	2B	TWO GANG BOX 2 1/2" DEEP
4F	4" SQ. BOX 2 1/8" DEEP W/ 1 1/2" EXT. RING	2C	TWO GANG BOX 2 3/4" DEEP
4G	4" SQ. BOX 2 1/8" DEEP W/ SINGLE GANG COVER	HB	HANDY BOX 1 1/2" DEEP
4H	4" SQ. BOX 2 1/8" DEEP W/ TWO GANG COVER	6A	6 SINGLE GANG BOXES 3 1/2" DEEP
4J	4" SQ. BOX 2 1/2" DEEP	6B	6 GANG BOX
4K	4" OCT. BOX 1 1/2" DEEP	6C	6 GANG BOX 2 1/2" DEEP
4L	4" OCT. BOX 1 1/2" DEEP W/ 1 1/2" EXT. RING	6D	6 GANG BOX 3 1/2" DEEP
4M	4 11/16" SQ. BOX 2 1/8" DEEP	FBO	FURNISHED BY OTHERS
4N	4 11/16" SQ. BOX 1 1/2" DEEP W/ 1 1/2" EXT. RING	MFG	SUPPLIED BY MANUFACTURER
4P	4 11/16" SQ. BOX 2 1/8" DEEP W/ 1 1/2" EXT. RING	MDW	MOUNTS TO DUCTWORK
1A	SINGLE GANG BOX 1 1/2" DEEP	MBD	MOUNTS IN BOX BEHIND DETECTOR
1B	SINGLE GANG BOX 2" DEEP	WM	WALL MOUNT
1C	SINGLE GANG BOX 2 1/8" DEEP	DT	DESK TOP MOUNT
1D	SINGLE GANG BOX 2 1/8" DEEP W/COVER	NR	NO BACKBOX REQUIRED
1E	SINGLE GANG BOX 2 1/2" DEEP	TRM	3.5" WIDE SNAP TRACK W/MOUNTING SCREWS

FOR ADDITIONAL BACK BOX OPTIONS, REFER TO THE XX-700 SERIES DRAWINGS OR PRODUCT DATA SHEETS AND INSTALLATION INSTRUCTIONS.

FIRE ALARM WIRE LIST

	CIRCUIT DESCRIPTION	CONSTRUCTION	GAUGE	CIRCUIT PROPERTIES	ACCEPTABLE CABLE TYPES FPLR	THHN/ TFFN	FPLP	OUTDOOR
V	VISUAL SIGNAL	2 COND. SOLID	14 AWG		X	X	X	
B	RUI+ COMMUNICATION	UTP SOLID	18 AWG	60pf/ft., MAX CAPACITANCE; 3 twists/ft. RECOMMENDED	X		X	
D	DOOR HOLDER	TP SOLID	14 AWG		X	X	X	
K	REMOTE TEST SWITCH/LED	(2) 2 COND. SOLID	14 AWG		X	X	X	
M	IDNET	UTP SOLID	18 AWG		X		X	
P	POWER	2 COND. SOLID	14 AWG		X	X	X	
R	RELAY	2 COND. SOLID	14 AWG		X	X	X	
Z	ZONE (IDC)	2 COND. SOLID	16 AWG		X	X	X	

CONDUIT SIZE	MAX CONDUCTOR AREA	CONDUIT SIZE	MAX CONDUCTOR AREA	NOTES
1/2"	0.12 SQ INCH *	1-1/4"	0.60 SQ INCH *	*40% FILL PER N.E.C.
3/4"	0.21 SQ INCH *	1-1/2"	0.82 SQ INCH *	SUBSCRIPT "s": UNSHIELDED CABLES MIXED WITH SHIELDED
1"	0.34 SQ INCH *	2"	1.34 SQ INCH *	CABLES OF SAME CIRCUIT DESIGNATION.

**OUTDOOR AERIAL CABLE REQUIRES MESSENGER

ITEMS SUCH AS CAPACITANCE BETWEEN CONDUCTORS AND WIRE GAUGE CAN BE CRUCIAL TO THE CIRCUIT DESIGN OF THIS SYSTEM INSTALLATION. THE INSTALLING CONTRACTOR IS RESPONSIBLE FOR SELECTING AND INSTALLING CABLE MANUFACTURER AND MODEL THAT MEETS OR EXCEEDS THE ABOVE REQUIREMENTS. RECOMMENDED CABLE MANUFACTURERS AND MODEL NUMBERS ARE AVAILABLE UPON REQUEST.

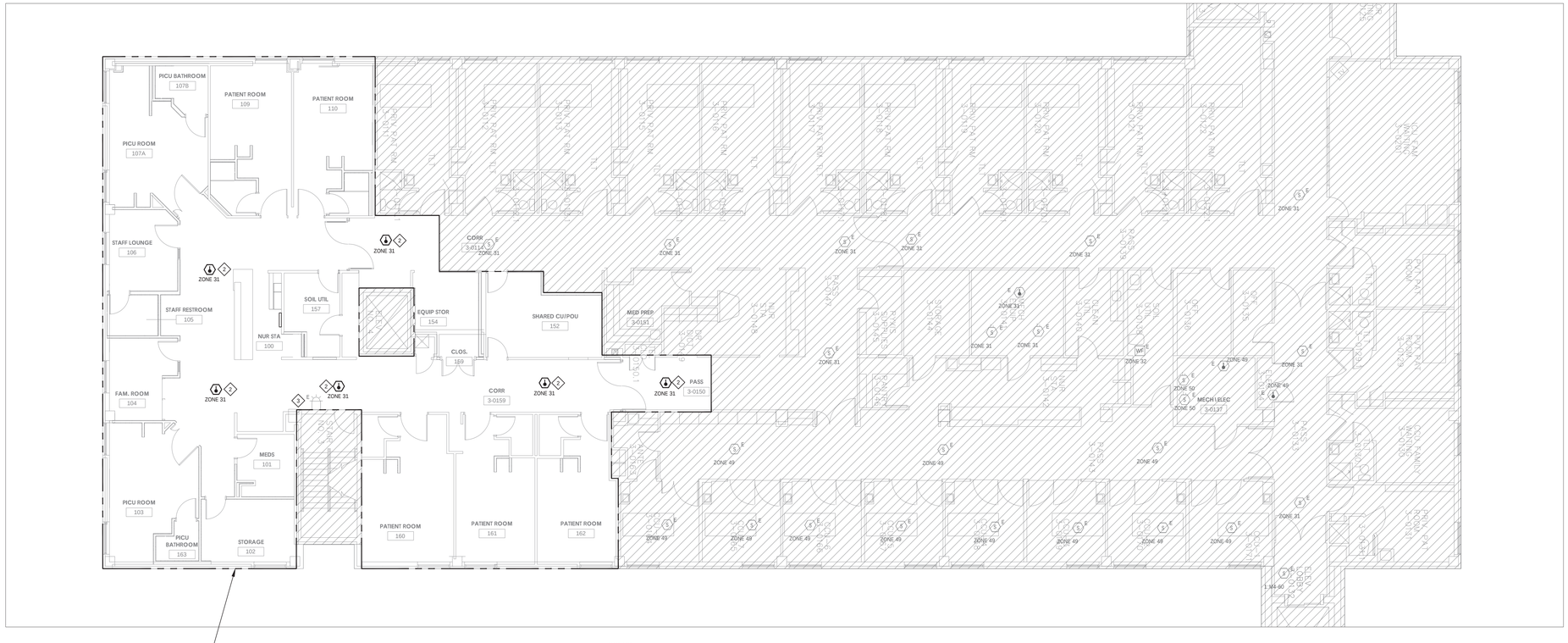

NICET CERTIFICATION

TECHNICAL AREA 00303: LEVEL 3
CERTIFICATE #: 83242
VALID THROUGH: 10/01/17

STEVE SHARP — DATE 11/29/16

3RD FLOOR CENTRAL TOWER A INTERIM LIFE SAFETY - DEVICE PLACEMENT PLAN

SCALE: 1/8" = 1'-0"
0 4 8 16
(IN FEET)

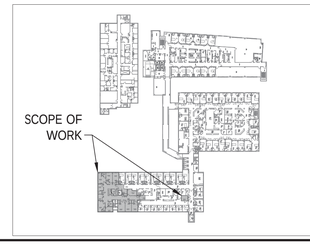

tyco SimplexGrinnell
Safer. Smarter. Tyco.™
DISTRICT 148
10065 E. HARVARD AVE
AURORA, CO 80012
SERVICE: 303-355-0500
PHONE: 303-355-0500
FAX: 303-353-0451

SimplexGrinnell disclaims all liability for the use or reuse of this drawing for any third party. Any use, reuse, copying modifications or alteration of the information contained herein shall be at the sole risk of the user. This information may not be sold or transferred to any third party, used on other projects or additions to the project for which it was prepared, or used for completion of this project by any third party without the written permission of and adaptation by SimplexGrinnell.

3RD FLOOR PEDIATRICS RENOVATION
MEDICAL CENTER OF AURORA

MEDICAL CENTER OF AURORA
1501 S. POTOMAC ST.
AURORA, CO 80012

ISSUE LOG: MARK	DATE	CAD	CHK	DESCRIPTION
1	10/7/16	RV	SS	SUBMITTED FOR REVIEW

Revisions shown with ⚠ symbol

DRAWN BY:	R.V.
CHECKED BY:	S.S
ISSUE DATE:	11/17/16
JOB #:	16-018
PROJECT #:	419:991184502
TYCO SIMPLEXGRINNELL © 2016	
SYSTEM:	FIRE ALARM SYSTEM
SHEET:	3RD FLOOR CENTRAL TOWER A - DEVICE PLACEMENT PLAN

FA-101

IMPORTANT NOTICE TO USER: By accepting or using this drawing and/or the information contained herein, the user agrees to the following terms and conditions: The electronic information in the drawing may be subject to intentional or unintentional distortion. Any use, reuse, copying modifications or distortion of the information contained herein shall be at the sole risk of the user. This information may not be sold or transferred to any third party, used on other projects or additions to the project for which it was prepared, or used for completion of this project by any third party without the written permission of and adaptation by SimplexGrinnell.

FILE PATH: C:\Users\smaddenl\box Sync\Med Ctr of Aurora\21 - Cath Lab Expansion - 2016 - 991184502\3rd Floor Peds Renov\Cath Lab Peds Renov\Working Drawings\FA-101.dwg
LAST SAVED BY: CMADDEN
LAST PRINTED: 11/29/2016 4:10:42 PM
30" x 42" – Arch E1 Size

City of Aurora Building Division
Project: *Medical Center of Aurora*
Address: *1501 S POTOMAC ST*
Occupancy Group: *IBC I-2*
Construction Type: *IBC Type IA-SPK*
RSN: *1167880*
Permit: *2016-1214781-LT*

City of Aurora Building Division
Reviewed for Code Compliance
By: *Ted Caviness*
Date: *December 14, 2016*
2015 INTERNATIONAL CODES & 2014 NEC

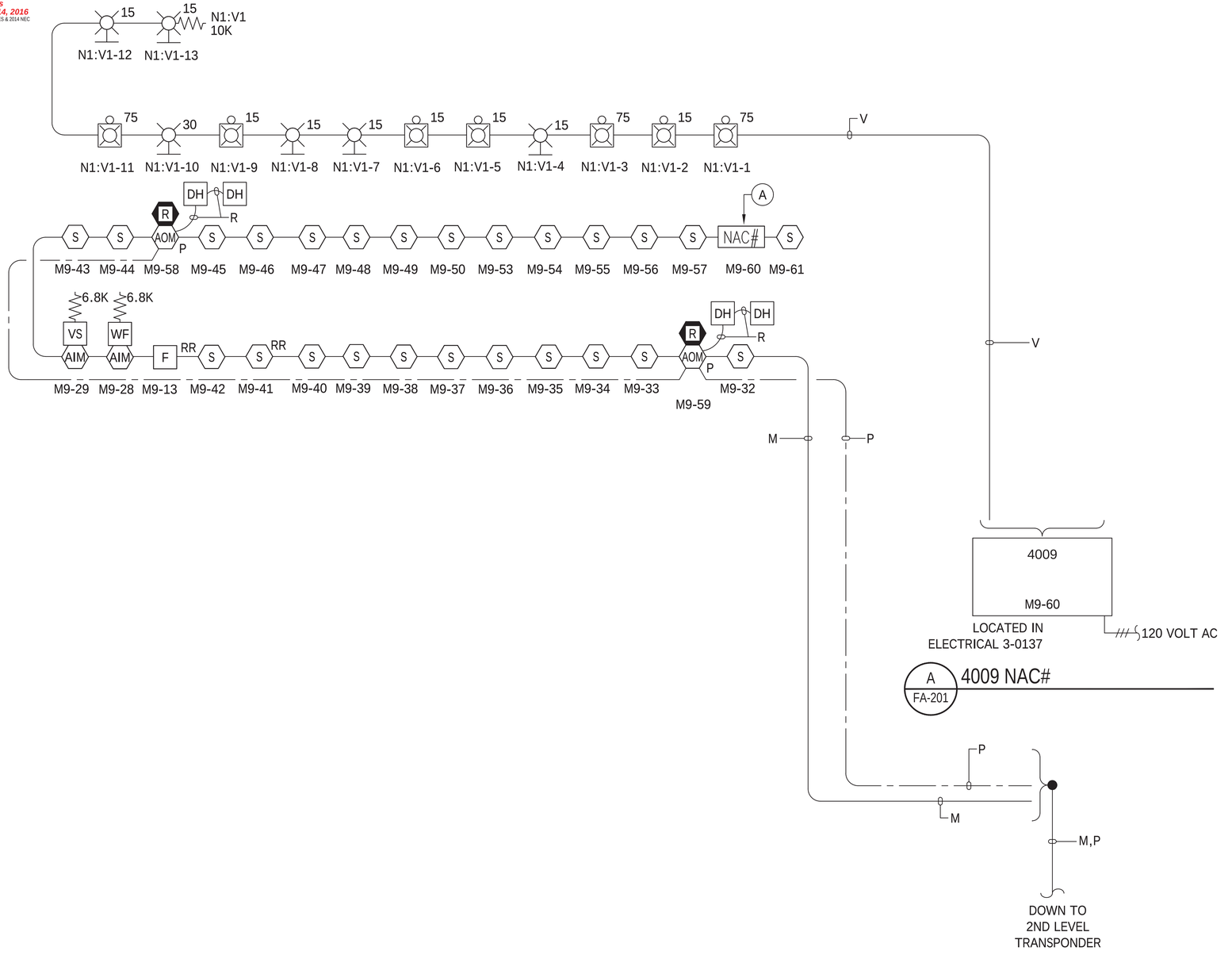

PARTIAL RISER DIAGRAM

SCALE: NTS

RISER NOTES:

1. RISER IS A DIAGRAMMATICAL REPRESENTATION OF THE SYSTEM ARCHITECTURE IN BUILDING CROSS SECTION. IT IS NOT INTENDED TO REPRESENT ACTUAL WIRE RUNS, PANEL CONFIGURATIONS OR PENETRATIONS. REFER TO FLOOR PLANS AND PANEL DETAILS FOR CIRCUIT ROUTING AND CONFIGURATION INFORMATION.
2. ALL WIRING SHALL COMPLY WITH APPLICABLE ELECTRICAL CODES. REFER TO APPLICABLE CODES & STANDARDS' ON SHEET FA-000 FOR SPECIFIC CODE REFERENCES.
3. DEVICES ARE TYPICAL. SEE FLOOR PLAN FOR QUANTITY & LOCATIONS.

FIRE ALARM SYMBOL LEGEND

SYMBOL	DESCRIPTION	BRAND	MODEL	BOX CODE	WIRE TYPE
NAC#	4009 NAC EXTENDER PANEL, BEIGE, 120 VAC	SIMPLEX	4009-9001	MFG	
F	DOUBLE ACTION MANUAL PUSH/PULL STATION	SIMPLEX	4099-9006	4G 1E	M
WG	PHOTOELECTRIC SMOKE SENSOR WITH STANDARD BASE WG = SECURITY VANDAL GUARD, SIMPLEX 4098-9846	SIMPLEX	4098-9714 HEAD 4098-9792 BASE	4A 4K	M
	HEAT SENSOR - ROR - NON ADDRESSABLE 135° WITH RELAY BASE 2-WIRE	SIMPLEX	4098-9613 HEAD 4098-9788 BASE	4A 1B	Z R
AIM	INDIVIDUAL ADDRESSABLE MODULE	SIMPLEX	4090-9001	1F	M Z
AOM P	RELAY IAM	SIMPLEX	4090-9002	4H	M R
R	ENCAPSULATED RELAY PAM-1, SPDT W/ LED, APOLLO AMERICA INC PAM-1	SIMPLEX	2088-9021	1D	R
	EXISTING CHIME/STROBE, WALL MOUNT	SIMPLEX	EXISTING		V
	MULTI-CANDELA CHIME/STROBE, WALL MOUNT, RED, FIRE, CLEAR LENS	SIMPLEX	4906-9133	4A 1B	V
STI	STROBE, WALL MOUNT, RED, FIRE, CLEAR LENS STI = STOPPER DOME, STI-1219	SIMPLEX	4906-9101	1A 4A	V
DH	DOOR HOLD	SIMPLEX	DH2412OFC		

CODE	BOX SPECIFICATIONS	CODE	BOX SPECIFICATIONS
4A	4" SQ. BOX 1 1/2" DEEP	1F	SINGLE GANG BOX 2 1/2" DEEP W/COVER
4B	4" SQ. BOX 1 1/2" DEEP W/ COVER	1G	SINGLE GANG BOX 2 3/4" DEEP
4C	4" SQ. BOX 1 1/2" DEEP W/ 1 1/2" EXT. RING	1H	SINGLE GANG BOX 3 1/2" DEEP
4D	4" SQ. BOX 2 1/8" DEEP	2A	DOUBLE GANG BOX 2" DEEP
4E	4" SQ. BOX 2 1/8" DEEP W/ COVER	2B	TWO GANG BOX 2 1/2" DEEP
4F	4" SQ. BOX 2 1/8" DEEP W/ 1 1/2" EXT. RING	2C	TWO GANG BOX 2 3/4" DEEP
4G	4" SQ. BOX 2 1/8" DEEP W/ SINGLE GANG COVER	HB	HANDY BOX 1 1/2" DEEP
4H	4" SQ. BOX 2 1/8" DEEP W/ TWO GANG COVER	6A	6 SINGLE GANG BOXES 3 1/2" DEEP
4J	4" SQ. BOX 2 1/2" DEEP	6B	6 GANG BOX
4K	4" OCT. BOX 1 1/2" DEEP	6C	6 GANG BOX 2 1/2" DEEP
4L	4" OCT. BOX 1 1/2" DEEP W/ 1 1/2" EXT. RING	6D	6 GANG BOX 3 1/2" DEEP
4M	4 11/16" SQ. BOX 2 1/8" DEEP	FBO	FURNISHED BY OTHERS
4N	4 11/16" SQ. BOX 1 1/2" DEEP W/ 1 1/2" EXT. RING	MFG	SUPPLIED BY MANUFACTURER
4P	4 11/16" SQ. BOX 2 1/8" DEEP W/ 1 1/2" EXT. RING	MDW	MOUNTS TO DUCTWORK
1A	SINGLE GANG BOX 1 1/2" DEEP	MBD	MOUNTS IN BOX BEHIND DETECTOR
1B	SINGLE GANG BOX 2" DEEP	WM	WALL MOUNT
1C	SINGLE GANG BOX 2 1/8" DEEP	DT	DESK TOP MOUNT
1D	SINGLE GANG BOX 2 1/8" DEEP W/COVER	NR	NO BACKBOX REQUIRED
1E	SINGLE GANG BOX 2 1/2" DEEP	TRM	3.5" WIDE SNAP TRACK W/MOUNTING SCREWS

FOR ADDITIONAL BACK BOX OPTIONS, REFER TO THE XX-700 SERIES DRAWINGS OR PRODUCT DATA SHEETS AND INSTALLATION INSTRUCTIONS.

FIRE ALARM WIRE LIST

CIRCUIT DESCRIPTION		CONSTRUCTION	GAUGE	CIRCUIT PROPERTIES	ACCEPTABLE CABLE TYPES			
					FPLR	THHN / TFFN	FPLP	OUTDOOR
V	VISUAL SIGNAL	2 COND. SOLID	14 AWG		X	X	X	
B	RUI+ COMMUNICATION	UTP SOLID	18 AWG	60pf/ft. MAX CAPACITANCE; 3 twists/ft. RECOMMENDED	X		X	
D	DOOR HOLDER	TP SOLID	14 AWG		X	X	X	
K	REMOTE TEST SWITCH/LED	(2) 2 COND. SOLID	14 AWG		X	X	X	
M	IDNET	UTP SOLID	18 AWG		X		X	
P	POWER	2 COND. SOLID	14 AWG		X	X	X	
R	RELAY	2 COND. SOLID	14 AWG		X	X	X	
Z	ZONE (IDC)	2 COND. SOLID	16 AWG		X	X	X	

CONDUIT SIZE	MAX CONDUCTOR AREA	CONDUIT SIZE	MAX CONDUCTOR AREA	NOTES
1/2"	0.12 SQ INCH *	1-1/4"	0.60 SQ INCH *	*40% FILL PER N.E.C.
3/4"	0.21 SQ INCH *	1-1/2"	0.82 SQ INCH *	SUBSCRIPT "c" : UNSHIELDED CABLES MIXED WITH SHIELDED
1"	0.34 SQ INCH *	2"	1.34 SQ INCH *	CABLES OF SAME CIRCUIT DESIGNATION.

**OUTDOOR AERIAL CABLE REQUIRES MESSENGER

ITEMS SUCH AS CAPACITANCE BETWEEN CONDUCTORS AND WIRE GAUGE CAN BE CRUCIAL TO THE CIRCUIT DESIGN OF THIS SYSTEM INSTALLATION. THE INSTALLING CONTRACTOR IS RESPONSIBLE FOR SELECTING AND INSTALLING CABLE MANUFACTURER AND MODEL THAT MEETS OR EXCEEDS THE ABOVE REQUIREMENTS. RECOMMENDED CABLE MANUFACTURERS AND MODEL NUMBERS ARE AVAILABLE UPON REQUEST.

NICET CERTIFICATION

TECHNICAL AREA 00303: LEVEL 3
CERTIFICATE #: 83242
VALID THROUGH: 10/01/17

STEVE SHARP — 11/29/16 DATE

tyco SimplexGrinnell
Safer. Smarter. Tyco.™
DISTRICT 148
10065 E. HARVARD AVE
AURORA, CO 80012
SERVICE: 303-365-0500
PHONE: 303-365-0500
FAX: 303-365-0051

3RD FLOOR PEDIATRICS RENOVATION
MEDICAL CENTER OF AURORA

MEDICAL CENTER OF AURORA
1501 S. POTOMAC ST.
AURORA, CO 80012

ISSUE LOG						
MARK	DATE	CAD	CHK	DESCRIPTION		
1	11/17/2016	RV	SS	SUBMITTED FOR REVIEW		

DRAWN BY:	R.V.
CHECKED BY:	S.S.
ISSUE DATE:	11/17/16
JOB #:	16-018
PROJECT #:	419:991184502

TYCO SIMPLEXGRINNELL © 2016

SYSTEM: FIRE ALARM SYSTEM

SHEET: PARTIAL RISER DIAGRAM

FA-201

Revisions shown with a symbol

IMPORTANT NOTICE TO USER: By accepting or using this drawing and/or the information contained herein, the user agrees to the following terms and conditions. The electronic information in the drawing may be subject to intentional or unintentional alteration. Any use, reuse, copying, modification or alteration of the information contained herein shall be at the sole risk of the user. This information may not be sold or transferred to any third party, used on other projects or additions to the project for which it was prepared, or used for completion of this project by any third party. SimplexGrinnell disclaims all liability for the use or reuse of the information contained herein by the user or any third party and will hold the user harmless for any and all claims resulting from such use. This drawing is the property of Tyco Simplex Grinnell and may not be reproduced or transmitted in any form or by any means, electronic or mechanical, without the permission of Tyco Simplex Grinnell.

FILE PATH: C:\Users\smaldenbox Sync\Med Ctr of Aurora\21 - Cath Lab Expansion - 2016 - 991184502\3rd Floor Peds Reno\Cath Lab Peds Reno\Working Drawings\FA-201 RISER DIAGRAM.dwg
LAST SAVED BY: CAMOKEN
LAST PRINTED: 11/29/2016 4:18:45 PM
36" X 42" - Arch E1 Size

City of Aurora Building Division
Project: Medical Center of Aurora
Address: 1501 S POTOMAC ST
Occupancy Group: IBC I-2
Construction Type: IBC Type IA-SPK
RSN: 1167880
Permit: 2016-1214781-LT

City of Aurora Building Division
Reviewed for Code Compliance
By: Ted Caviness
Date: December 14, 2016
2015 INTERNATIONAL CODES & 2014 NEC

IDNET CHANNEL 1:M9	ADDRESSES IN USE: 84 (33.6%) | SPARE ADDRESSES: 166 (66.4%)			SWITCH SETTINGS									
Address	Device Type	Point Type	Location Description	1	2	3	4	5	6	7	8		9
1:M9-1	PHOTO	SMOKE	1:M9-1 2ND FL P-PARTUM PATIENT RM 201	X								ON	
1:M9-2	PHOTO	SMOKE	1:M9-2 2ND FL P-PARTUM PATIENT RM 202		X							ON	
1:M9-3	PHOTO	SMOKE	1:M9-3 2ND FL P-PARTUM PATIENT RM 203	X	X							ON	
1:M9-4	PHOTO	SMOKE	1:M9-4 2ND FL P-PARTUM PATIENT RM 204			X						ON	
1:M9-5	PHOTO	SMOKE	1:M9-5 2ND FL P-PARTUM PATIENT RM 205	X		X						ON	
1:M9-6	PHOTO	SMOKE	1:M9-6 2ND FL P-PARTUM PATIENT RM 206		X	X						ON	
1:M9-7	PHOTO	SMOKE	1:M9-7 2ND FL P-PARTUM PATIENT RM 207	X	X	X						ON	
1:M9-8	PHOTO	SMOKE	1:M9-8 2ND FL P-PARTUM PATIENT RM 208				X					ON	
1:M9-9	PHOTO	SMOKE	1:M9-9 2ND FL P-PARTUM PATIENT RM 209	X			X					ON	
1:M9-10	PHOTO	SMOKE	1:M9-10 2ND FL P-PARTUM PATIENT RM 210		X		X					ON	
1:M9-11	PHOTO	SMOKE	1:M9-11 2ND FL P-PARTUM PATIENT RM 211	X	X		X					ON	
1:M9-12	PHOTO	SMOKE	1:M9-12 2ND FL P-PARTUM PATIENT RM 212			X	X					ON	
1:M9-13	ADRPUL	PULL	1:M9-13 3RD FL TWR A STAIR 3	X		X	X					ON	
1:M9-14	PHOTO	SMOKE	1:M9-14 2ND FL P-PARTUM PATIENT RM 214		X	X	X					ON	
1:M9-15	PHOTO	SMOKE	1:M9-15 2ND FL P-PARTUM PATIENT RM 215	X	X	X	X					ON	
1:M9-16	PHOTO	SMOKE	1:M9-16 2ND FL P-PARTUM PATIENT RM 216					X				ON	
1:M9-17	PHOTO	SMOKE	1:M9-17 2ND FL P-PARTUM PATIENT RM 217	X				X				ON	
1:M9-18	PHOTO	SMOKE	1:M9-18 2ND FL P-PARTUM PATIENT RM 218		X			X				ON	
1:M9-19	PHOTO	SMOKE	1:M9-19 2ND FL P-PARTUM PATIENT RM 219	X	X			X				ON	
1:M9-20	PHOTO	SMOKE	1:M9-20 2ND FL P-PARTUM PATIENT RM 220			X		X				ON	
1:M9-21	PHOTO	SMOKE	1:M9-21 2ND FL P-PARTUM PATIENT RM 221	X		X		X				ON	
1:M9-22	PHOTO	SMOKE	1:M9-22 2ND FL P-PARTUM PATIENT RM 222		X	X		X				ON	
1:M9-23	PHOTO	SMOKE	1:M9-23 2ND FL P-PARTUM PATIENT RM 223	X	X	X		X				ON	
1:M9-24	PHOTO	SMOKE	1:M9-24 2ND FL P-PARTUM PATIENT RM 224				X	X				ON	
1:M9-25	PHOTO	SMOKE	1:M9-25 2ND FL P-PARTUM PATIENT RM 225	X			X	X				ON	
1:M9-26	PHOTO	SMOKE	1:M9-26 2ND FL P-PARTUM PATIENT RM 226		X		X	X				ON	
1:M9-27	PHOTO	SMOKE	1:M9-27 2ND FL P-PARTUM WAITING RM 227	X	X		X	X				ON	
1:M9-28	IAM	WATER	1:M9-28 3RD FL PEDS WATERFLOW			X	X	X				ON	
1:M9-29	IAM	LATSUPV	1:M9-29 3RD FL PEDS TAMPER	X		X	X	X				ON	
1:M9-30	PHOTO	SMOKE	1:M9-30 2ND FL P-PARTUM ON-CALL RM 200		X	X	X	X				ON	
1:M9-31	PHOTO	SMOKE	1:M9-31 2ND FL P-PARTUM WAITING RM 234	X	X	X	X	X				ON	
1:M9-32	PHOTO	SMOKE	1:M9-32 3RD FL ELEC 3-0137						X			ON	
1:M9-33	PHOTO	SMOKE	1:M9-33 3RD FL PASS 3-0150	X					X			ON	
1:M9-34	PHOTO	SMOKE	1:M9-34 3RD FL PEDS CORR 3-0159		X				X			ON	
1:M9-35	PHOTO	SMOKE	1:M9-35 3RD FL PEDS PAT RM162	X	X				X			ON	
1:M9-36	PHOTO	SMOKE	1:M9-36 3RD FL PEDS PAT RM161			X			X			ON	
1:M9-37	PHOTO	SMOKE	1:M9-37 3RD FL PEDS SHARED CU 152	X		X			X			ON	
1:M9-38	PHOTO	SMOKE	1:M9-38 3RD FL PEDS PAT RM160		X	X			X			ON	
1:M9-39	PHOTO	SMOKE	1:M9-39 3RD FL PEDS CLOSET 159	X	X	X			X			ON	
1:M9-40	PHOTO	SMOKE	1:M9-40 3RD FL PEDS EQUIP RM154				X		X			ON	
1:M9-41	PHOTO	SMOKE	1:M9-41 3RD FL PEDS ELEV LOBBY	X			X		X			ON	
1:M9-42	PHOTO	SMOKE	1:M9-42 3RD FL PEDS CLOSET BY 159		X		X		X			ON	
1:M9-43	PHOTO	SMOKE	1:M9-43 3RD FL PEDS SOUL RM157	X	X		X		X			ON	
1:M9-44	PHOTO	SMOKE	1:M9-44 3RD FL PEDS CORR BY RM157			X	X		X			ON	
1:M9-45	PHOTO	SMOKE	1:M9-45 3RD FL PEDS PAT RM110	X		X	X		X			ON	
1:M9-46	PHOTO	SMOKE	1:M9-46 3RD FL PEDS PAT RM109		X	X	X		X			ON	
1:M9-47	PHOTO	SMOKE	1:M9-47 3RD FL PEDS PICU RM107A	X	X	X	X		X			ON	
1:M9-48	PHOTO	SMOKE	1:M9-48 3RD FL PEDS STAFF LOUNGE 106					X	X			ON	
1:M9-49	PHOTO	SMOKE	1:M9-49 3RD FL PEDS STAFF RR 105	X				X	X			ON	
1:M9-50	PHOTO	SMOKE	1:M9-50 3RD FL PEDS NURSE STATION 100		X			X	X			ON	
1:M9-51	PHOTO	SMOKE	1:M9-51 2ND FL P-PARTUM NORTH CORR	X	X			X	X			ON	
1:M9-52	PHOTO	SMOKE	1:M9-52 2ND FL P-PARTUM 2A-HALL-01			X		X	X			ON	
1:M9-53	PHOTO	SMOKE	1:M9-53 3RD FL PEDS FAM RM104	X		X		X	X			ON	
1:M9-54	PHOTO	SMOKE	1:M9-54 3RD FL PEDS CORR PICU RM103		X	X		X	X			ON	
1:M9-55	PHOTO	SMOKE	1:M9-55 3RD FL PEDS PICU RM103	X	X	X		X	X			ON	
1:M9-56	PHOTO	SMOKE	1:M9-56 3RD FL PEDS MEDS 101				X	X	X			ON	
1:M9-57	PHOTO	SMOKE	1:M9-57 3RD FL PEDS STRG 102	X			X	X	X			ON	
1:M9-58	RIAM	DHOLDER	1:M9-58 3RD FL PEDS ELEV LOBBY		X		X	X	X			ON	
1:M9-59	RIAM	DHOLDER	1:M9-59 3RD FL TEL CLOSET 3-0150.1	X	X		X	X	X			ON	
1:M9-60	NAC4PT	SIGNAL	1:M9-60 3RD FL PEDS ELEC 3-0137			X	X	X	X			ON	
1:M9-61	PHOTO	SMOKE	1:M9-61 3RD FL PEDS CORR 3-0159	X		X	X	X	X			ON	
1:M9-62			SPARE		X	X	X	X	X			ON	
1:M9-63	ADRPUL	PULL	1:M9-63 2ND FL P-PARTUM NURSE 248	X	X	X	X	X	X			ON	
1:M9-64			SPARE							X		ON	
1:M9-65			SPARE	X						X		ON	
1:M9-66			SPARE		X					X		ON	
1:M9-67			SPARE	X	X					X		ON	
1:M9-68			SPARE			X				X		ON	
1:M9-69			SPARE	X		X				X		ON	
1:M9-70	PHOTO	SMOKE	1:M9-70 2ND FL L&D NURSERY 254		X	X				X		ON	
1:M9-71	PHOTO	SMOKE	1:M9-71 2ND FL L&D NURSING STATION C	X	X	X				X		ON	
1:M9-72	PHOTO	SMOKE	1:M9-72 2ND FL L&D MEDICATION 258				X			X		ON	
1:M9-73	PHOTO	SMOKE	1:M9-73 2ND FL L&D BATH 258B	X			X			X		ON	
1:M9-74	PHOTO	SMOKE	1:M9-74 2ND FL L&D SUPPLY SCAN		X		X			X		ON	
1:M9-75	PHOTO	SMOKE	1:M9-75 2ND FL L&D ISOLATION ROOM 1	X	X		X			X		ON	
1:M9-76	PHOTO	SMOKE	1:M9-76 2ND FL L&D ISOLATION ROOM 2			X	X			X		ON	
1:M9-77	PHOTO	SMOKE	1:M9-77 2ND FL L&D SLEEP ROOM	X		X	X			X		ON	
1:M9-78	PHOTO	SMOKE	1:M9-78 2ND FL L&D NURSEY 257		X	X	X			X		ON	
1:M9-79	PHOTO	SMOKE	1:M9-79 2ND FL L&D DELIVERY WEST	X	X	X	X			X		ON	
1:M9-80	PHOTO	SMOKE	1:M9-80 2ND FL L&D SOILED UTILITY 269					X		X		ON	
1:M9-81	PHOTO	SMOKE	1:M9-81 2ND FL L&D GOWN-SCRUB AREA 256	X				X		X		ON	
1:M9-82	PHOTO	SMOKE	1:M9-82 2ND FL L&D NURSERY 255		X			X		X		ON	
1:M9-83	ADRPUL	SMOKE	1:M9-83 2ND FL P-PARTUM NURSE STATION	X	X			X		X		ON	
1:M9-84	ADRPUL	SMOKE	1:M9-84 2ND FL P-PARTUM MAIN ENTRY			X		X		X		ON	
1:M9-85			SPARE	X		X		X		X		ON	
THRU													
1:M9-246			SPARE		X	X		X	X	X	X	ON	
1:M9-247	IDNETISO	ISO	1:M9-247 ND FL P-PARTUM	X	X	X		X	X	X	X	ON	
1:M9-248	IDNETISO	ISO	1:M9-248 2ND FL P-PARTUM				X	X	X	X	X	ON	
1:M9-249	IDNETISO	ISO	1:M9-249 2ND FL P-PARTUM	X			X	X	X	X	X	ON	
1:M9-250	IDNETISO	ISO	1:M9-250 2ND FL P-PARTUM		X		X	X	X	X	X	ON	

NOTE: THE LABELS SHOWN ABOVE WILL BE USED FOR PROGRAMMING PURPOSES.
THE LABELS ARE BASED UPON INFORMATION SHOWN ON THE ARCHITECTURAL DRAWINGS.
ANY CHANGES TO THESE LABELS MUST BE NOTED ON THE SUBMITTAL REVIEW, PRIOR TO PROGRAMMING.
POINTS SHOWN IN ITALIC TEXT REFER TO EXISTING DEVICES.

TMCA CENTRAL TOWER A XPR 2 - LEV 2 4100u XPDR

Module	Qty	Description		Standby Current	Total Standby	Alarm Current	Total Alarm
Panel Equipment							
4100-9600	1	BASIC TRANSPONDER	*	0.0870	0.0870	0.0870	0.0870
4100-5125	1	REMOTE POWER SUPPLY W/CHARGER - 120VAC		0.1500	0.1500	0.1850	0.1850
4100-5101	1	EXPANSION PWR SUPPLY (XPS) - 120VAC 60HZ		0.0500	0.0500	0.0500	0.0500
4100-0620	1	TRANSPONDER INTERFACE MODULE		0.0870	0.0870	0.0870	0.0870
4100-3107	1	IDNET+ MODULE, UP TO 250 POINTS	*	0.0750	0.0750	0.1150	0.1150
		Panel Totals			0.4490		0.5240
IDNet Addressable Devices (SLC)							
4099-9004	4	ADDRESSABLE SINGLE ACTION MANUAL STATION	*	Constant current draw of .8mA standby and 1mA alarm per address used. Devices requiring additional current are accounted for in the section labeled "Miscellaneous Peripheral Devices Requiring Additional System Power".			
4090-9001	2	IDNET SUPERVISED IAM	*				
4090-9002	2	IDNET RELAY IAM	*				
4090-9116	4	INTELLIGENT IDNET ISOLATOR MODULE	*				
4098-9714	68	TRUEALARM PHOTO SMOKE SENSOR					
4009-9201	1	4009 IDNET NAC EXTENDER, 120 VAC	*				
4098-9792	68	TRUEALARM SENSOR BASE	*				
Notification Appliances							
4906-9101	2	V/O MC NON-ADDRESS, RED, WALL	15	0.0000	0.0000	0.0600	0.1200
4906-9104	1	V/O MC NON-ADDRESS, WHT, CEILING	15	0.0000	0.0000	0.0750	0.0750
4906-9104	2	V/O MC NON-ADDRESS, WHT, CEILING	75	0.0000	0.0000	0.2330	0.4660
CH70-24-R	24	CHIME, 24 VDC, SQUARE, RED		0.0000	0.0000	0.0220	0.5280
CH70-24MCW-FR	24	MULTI CD CHIME STROBE, WALL MNT, RED	15	0.0000	0.0000	0.0600	1.4400
RSS-24MCW-FR	11	MULTI CD STROBE, WALL MNT, RED	15	0.0000	0.0000	0.0600	0.6600
		Peripheral Totals			0.0000		3.2890
		RUI Totals	0		0.0000		0.0000
		Address Totals	344 Addresses		0.2752		0.3440
		System Totals*:		Standby	0.7242	Alarm	4.1570

* Device Address current draw included below (See Additional Current Draws):

Battery Set #1 (Cabinet/Charger #1)			Standby Current	Standby Total	Alarm Current	Alarm Total
Select ALL Power Supplies on this battery set:						
XPS-1				0.2990		1.8360
			Sub Total	0.2990		1.8360
Additional Current Draws:						
MAPNET/IDNet Device Address Communication Current		344	x 0.000800	= 0.2752	x 0.001000	= 0.3440
			Sub Total	0.5742		2.1800
Spare addressable point capacity	0%	0	x 0.0008	= 0.0000	x 0.001	= 0.0000
			Total	0.5742		2.1800
Standby Time =	24	Hrs	x 0.5742	= 13.7808	Standby Ah	
Alarm Time =	5	Min	0.08333 x 2.18	= 0.1817	Alarm Ah	
				13.9625		
Additional Spare Battery Capacity =	0%		+	0.0000		
				13.9625		
Battery Discharge Factor =	20%		+	2.7925		
Minimum Battery Required	2081-9275 18AH (2x)			16.7550		
Battery Supplied	2081-9275 18AH (2x)					

* System Totals represent total system current requirements. Those currents may be distributed between multiple battery sets or power supplies as shown above.

Battery Set #2 (Cabinet/Charger #2)			Standby Current	Standby Total	Alarm Current	Alarm Total
Select ALL Power Supplies on this battery set:						
RPS-2				0.1500		1.9770
			Sub Total	0.1500		1.9770
Additional Current Draws:						
MAPNET/IDNet Device Address Communication Current		0	x 0.000800	= 0.0000	x 0.001000	= 0.0000
			Sub Total	0.1500		1.9770
Spare addressable point capacity	0%	0	x 0.0008	= 0.0000	x 0.001	= 0.0000
			Total	0.1500		1.9770
Standby Time =	24	Hrs	x 0.1500	= 3.6000	Standby Ah	
Alarm Time =	5	Min	0.08333 x 1.977	= 0.1648	Alarm Ah	
				3.7648		
Additional Spare Battery Capacity =	0%		+	0.0000		
				3.7648		
Battery Discharge Factor =	20%		+	0.7530		
Minimum Battery Required	2081-9272 6.2AH (2x)			4.5177		
Battery Supplied	2081-9272 6.2AH (2x)					

TMCA CENTRAL TOWER A XPR 2 - LEV 2 4100u XPDR VOLTAGE DROPS

WIRE RESISTANCE BASED ON TABLE 8 FROM NATIONAL ELECTRICAL CODE (UNCOATED SOLID COPPER WIRE) @ 75 Celsius

												PID	4906-9101	4906-9104	4906-9104	RSS-24MCW-FR	CH70-24MCW-FR	CH70-24-R
												Candela	15cd	15cd	75cd	15cd	15cd	
												Device Type	MC V/O	MC CEIL V/O	MC CEIL V/O	MC V/O	MC A/V	CHIME
												Supv. Current	0.0000	0.0000	0.0000	0.0000	0.0000	0.0000
												Alarm Current	0.0600	0.0750	0.2330	0.0600	0.0600	0.0220
												Alarm Current @ 23 Volts	0.0600	0.0750	0.2330	0.0600	0.0600	0.0220
NOTIFICATION CIRCUIT DESCRIPTION	Power Supply	Panel Circuit	Plan Ckt.	Dist. (D) Feet	Wire Gauge	Wire Res. / Ft. (R)	Total Alarm (A)	V. Drop (A*2D*R)	Volt @ End	% Volt Drop	Min Device Voltage	Max Distance						
2ND FLR PORT PARTUM STROBES	RPS-2	SIG3	SIG81	440	14ga	0.0031	0.780	2.107	17.393	10.81%	16vdc	731 Ft.				3	10	
2ND FLR C-SECTION SCRUB STROBES	RPS-2	SIG4	SIG82	500	14ga	0.0031	0.660	2.026	17.474	10.39%	16vdc	864 Ft.				5	6	
2ND FLR POST PARTUM CHIMES	RPS-2	SIG5	SIG83	750	14ga	0.0031	0.352	1.621	17.879	8.31%	16vdc	1619 Ft.						16
2ND FLR NICU STROBES	XPS-1	SIG6	SIG87	550	14ga	0.0031	0.660	2.229	17.271	11.43%	16vdc	864 Ft.				3	8	
2ND FLR NICU CHIMES	XPS-1	SIG7	SIG88	550	14ga	0.0031	0.176	0.594	18.906	3.05%	16vdc	3239 Ft.						8
2ND FLR POST PARTUM CHIMES/STR OLD	XPS-1	SIG8	SIG89	200	14ga	0.0031	0.661	0.812	18.688	4.16%	16vdc	862 Ft.	2	1	2			

NOTE:
LUMP SUM METHOD WAS USED TO CALCULATE ALLOWABLE VOLTAGE DROP. THIS METHOD ALLOWS FOR A SMALL MARGIN OF SAFETY, TAKING INTO CONSIDERATION THAT THE ACTUAL INSTALLED CIRCUIT ROUTING MAY DIFFER FROM WHAT IS SHOWN ON THE SHOP DRAWINGS. IF THE ACTUAL CIRCUIT LENGTH IS GOING TO EXCEED THE MAXIMUM ALLOWABLE CIRCUIT LENGTH, CONTACT YOUR LOCAL SIMPLEXGRINNELL DISTRICT OFFICE.

TMCA 3RD FLR PEDS NAC ELEC 3-0137 4009 NAC

Module	Qty	Description		Standby Current	Total Standby	Alarm Current	Total Alarm
Panel Equipment							
4009-9201	1	4009 IDNET NAC EXTENDER, 120 VAC		0.0850	0.0850	0.1850	0.1850
		Panel Totals			0.0850		0.1850
Notification Appliances							
4906-9101	5	V/O MC NON-ADDRESS, RED, WALL	15	0.0000	0.0000	0.0600	0.3000
4906-9101	1	V/O MC NON-ADDRESS, RED, WALL	30	0.0000	0.0000	0.0940	0.0940
4906-9133	4	TRUEALERT ELECTRONIC CHIME/STROBE, RED, WALL	15	0.0000	0.0000	0.0700	0.2800
4906-9133	3	TRUEALERT ELECTRONIC CHIME/STROBE, RED, WALL	75	0.0000	0.0000	0.2000	0.6000
		Peripheral Totals			0.0000		1.2740
		Added Current for EPS Conversion of 24 to 29 Volt IDNac Devices			0.0000		0.0000
		RUI Totals	0		0.0000		0.0000
		Address Totals	0 Addresses		0.0000		0.0000
		System Totals*:		Standby	0.0850	Alarm	1.4590

Battery Set #1 (Cabinet/Charger #1)			Standby Current	Standby Total	Alarm Current	Alarm Total
Select ALL Power Supplies on this battery set:						
4009				0.0850		1.4590
			Sub Total	0.0850		1.4590
			Total	0.0850		1.4590
Standby Time =	24	Hrs	x 0.0850	= 2.0400	Standby Ah	
Alarm Time =	5	Min	0.08333 x 1.459	= 0.1216	Alarm Ah	
				2.1616		
Additional Spare Battery Capacity =	0%		+	0.0000		
				2.1616		
Battery Discharge Factor =	20%		+	0.4323		
Minimum Battery Required	2081-9272 6.2AH (2x)			2.5939		
Battery Supplied	2081-9274 10AH (2x)					

* System Totals represent total system current requirements. Those currents may be distributed between multiple battery sets or power supplies as shown above.

VOLTAGE DROP SUMMARY

Plan Circuit	Description		Load	% Drop
N1:V1	3RD FLR PEDIATRICS	SIG1	1.274A	10.63%
N1:V2	SPARE	SIG2	0.000A	0.00%
N1:V3	SPARE	SIG3	0.000A	0.00%
N1:V4	SPARE	SIG4	0.000A	0.00%
			1.274A	Total

POINTS SHOWN IN ITALIC TEXT REFER TO EXISTING DEVICES.

N1:V1 Distributed Load Voltage Drop

Allowable % Drop: 17.9% | Wire Gauge: 14ga | Starting Voltage: 19.5vdc | Circuit Capacity: 2.A
Wire Res. Per Ft.: 0.0031 @ 75° Celsius | Min. Device Voltage: 16.vdc | % Voltage Drop: 10.63%

Device #	PID	Candela	Distance (Feet)	Device Current (Normal Operation)	Voltage Drop	Voltage At Device
N1:V1-10	4906-9101	30cd	18	0.094	0.141	19.36
N1:V1-12	4906-9101	15cd	20	0.060	0.286	19.21
N1:V1-13	4906-9101	15cd	31	0.060	0.499	19.00
N1:V1-4	4906-9101	15cd	25	0.060	0.662	18.84
N1:V1-7	4906-9101	15cd	52	0.060	0.981	18.52
N1:V1-8	4906-9101	15cd	18	0.060	1.085	18.42
N1:V1-1	4906-9133	75cd	122	0.200	1.744	17.76
N1:V1-11	4906-9133	75cd	28	0.200	1.861	17.64
N1:V1-2	4906-9133	15cd	20	0.070	1.920	17.58
N1:V1-3	4906-9133	75cd	39	0.200	2.018	17.48
N1:V1-5	4906-9133	15cd	22	0.070	2.046	17.45
N1:V1-6	4906-9133	15cd	20	0.070	2.064	17.44
N1:V1-9	4906-9133	15cd	22	0.070	2.073	17.43
		Totals:	437 Ft.	1.274A		

N1:V2 Distributed Load Voltage Drop

Allowable % Drop: 17.9% | Wire Gauge: 14ga | Starting Voltage: 19.5vdc | Ckt Capacity: 2.A
Wire Res. Per Ft.: 0.0031 @ 75° Celsius | Min. Device Voltage: 16.vdc | % Voltage Drop: 0.00%

Device #	PID	Candela	Distance (Feet)	Device Current (Normal Operation)	Voltage Drop	Voltage At Device
N1:V2-1				0.000	0.000	19.50
		Totals:	0 Ft.	0.000A		

N1:V3 Distributed Load Voltage Drop

Allowable % Drop: 17.9% | Wire Gauge: 14ga | Starting Voltage: 19.5vdc | Ckt Capacity: 2.A
Wire Res. Per Ft.: 0.0031 @ 75° Celsius | Min. Device Voltage: 16.vdc | % Voltage Drop: 0.00%

Device #	PID	Candela	Distance (Feet)	Device Current (Normal Operation)	Voltage Drop	Voltage At Device
N1:V3-1				0.000	0.000	19.50
		Totals:	0 Ft.	0.000A		

N1:V4 Distributed Load Voltage Drop

Allowable % Drop: 17.9% | Wire Gauge: 14ga | Starting Voltage: 19.5vdc | Ckt Capacity: 2.A
Wire Res. Per Ft.: 0.0031 @ 75° Celsius | Min. Device Voltage: 16.vdc | % Voltage Drop: 0.00%

Device #	PID	Candela	Distance (Feet)	Device Current (Normal Operation)	Voltage Drop	Voltage At Device
N1:V4-1				0.000	0.000	19.50
		Totals:	0 Ft.	0.000A		

NICET CERTIFICATION

TECHNICAL AREA 00303: LEVEL 3
CERTIFICATE #: 83242
VALID THROUGH: 10/01/17
STEVE SHARP
DATE 11/29/16

tyco SimplexGrinnell
Safer. Smarter. Tyco.™
DISTRICT - 419
14200 E. EXPOSITION AVE
AURORA, CO 80012
SERVICE: 303-355-0500
PHONE: 303-355-0500
FAX: 303-355-0615

3RD FLOOR PEDIATRICS RENOVATION
MEDICAL CENTER OF AURORA

MEDICAL CENTER OF AURORA
1501 S. POTOMAC ST.
AURORA, CO 80012

Revisions shown with △ symbol

ISSUE LOG: MARK	DATE	CAD	CHK	DESCRIPTION
1	11/17/16	RV	SS	SUBMITTED FOR REVIEW

DRAWN BY:	R.V.
CHECKED BY:	S.S.
ISSUE DATE:	11/17/16
JOB #:	16-018
PROJECT #:	419:991184502

TYCO SIMPLEXGRINNELL © 2016

SYSTEM: FIRE ALARM SYSTEM

SHEET: 4009 NAC - CALCULATIONS

FA-601

IMPORTANT NOTICE TO USER: By accepting or using this drawing and/or the information contained herein, the user agrees to the following terms and conditions: The electronic information in the drawing may be subject to intentional or unintentional alteration. Any use, reuse, copying modification or alteration of the information contained herein shall be at the sole risk of the user. This information may not be sold or transferred to any third party, used on other projects or additions to the project for which it was prepared, or used for completion of this project by any third party. SimplexGrinnell disclaims all liability for the use or reuse of altered files by the user or any third party and such use will be a user's sole risk. User shall, to the fullest extent permitted by law, defend, indemnify, and hold SimplexGrinnell harmless from any and all claims for loss, damage or injury arising directly or indirectly therefrom.

FILE PATH: C:\Users\cmadden\Box Sync\Med Cntr of Aurora\21 - Cath Lab Expansion - 2016 - 991184502\3rd Floor Peds Reno\Cath Lab Peds Reno\Working Drawings\FA-601 CALCULATIONS.dwg
LAST SAVED BY: CMADDEN
LAST PRINTED: 11/29/2016 4:10:59 PM
30" x 42" - Arch E1 Size

City of Aurora Building Division
Project: *Medical Center of Aurora*
Address: *1501 S POTOMAC ST*
Occupancy Group: *IBC I-2*
Construction Type: *IBC Type IA-SPK*
RSN: *1167880*
Permit: *2016-1214781-LT*

City of Aurora Building Division
Reviewed for Code Compliance
By: *Ted Cavitness*
Date: *December 14, 2016*
2015 INTERNATIONAL CODES & 2014 NEC

END OF LINE RESISTOR CODES

NOTE: REFER TO PANEL/MODULE AND DEVICE INSTALLATION INSTRUCTIONS FOR PROPER TERMINATIONS.

MODEL	REFERENCE NUMBER	OHMS	BAND NUMBER 1	2	3	4	5	WATTS	CIRCUIT TYPE	FIRE ALARM PANEL/MODULE
4081-9001	733-892	2.2K	RED	RED	RED	GLD	N/A	1/2	ANNUNCIATOR (4300)	4004, 4010 (TROUBLE)
4081-9002	733-893	3.3K	ORG	RED	RED	GLD	N/A	1	N.O. INITIATING PULL, SMOKE, HEAT, WATERFLOW, TAMPER, ETC.	4004*, 4004R, 4005*, 4006, 4100, 4120, 4100U, ZAMs
									24 PT. I/O SWITCH SUPV.	4605-7401, 4100 SERIES
4081-9003	733-896	4.7K	YEL	VLT	RED	GLD	N/A	1/2	CURRENT LIMITED N.O. INIT.	4090-9001 IDNET IAM (EOLR)
									NOTIFICATION (DACT)	2080-9024
4081-9004	733-886	6.8K	BLU	GRY	RED	GLD	N/A	1/2	N.O. INITIATING PULL, SMOKE, HEAT, WATERFLOW, TAMPER, ETC.	4004, 4005, 4090-9001 IDNET IAM 2190-9173 MAPNET® II 2 PT I/O 4-20MA IAM (TROUBLE)
4081-9005	733-984	1.8K	BRN	GRY	RED	GLD	N/A	1/2	CURRENT LIMITED N.O. INITIATING (IN LINE)	4090-9001 IDNET IAM
4081-9006	733-890	560 Ω	GRN	BLU	BRN	GLD	N/A	1	N.C. INITIATING (EOLR)	4005*, 4090-9001 IDNET IAM 4100, 4100U
4081-9007	733-891	1.2K	BRN	RED	RED	GLD	N/A	1	N.C. INITIATING (EOLR)	4005
4081-9008	733-894	10K	BRN	BLK	ORG	GLD	N/A	1/2	NOTIFICATION	4004, 4005, 4006, 4008, 4009, 4010, 4100, 4100U
4081-9009	733-912	20 Ω	RED	BLK	BLK	GLD	N/A	1	TO MR-101 RELAY COIL	4005 8 POINT I/O
4081-9010	733-973	1K	BRN	BLK	RED	GLD	N/A	1	N.C. INIT. (ACROSS CONTACTS)	4005*, 4090-9001 IDNET IAM
									24 PT. I/O (ACROSS CONTACTS)	4605-7401, 4100 SERIES
									CURRENT LIMITED N.O. INIT. (IN SERIES WITH CONTACT)	4090-9001 IDNET IAM
4081-9011	733-974	100 Ω	BRN	BLK	BRN	GLD	N/A	1/2	ANNUNCIATOR (N2)	4006, 4008, 4010
4081-9012	733-985	22K	RED	RED	ORG	GLD	N/A	1/2	SPEAKER CIRCUIT	4003
4081-9013	734-086	4.99K	YEL	WHT	WHT	BRN	BRN	1/2		
4081-9014	734-092	2.4K	RED	YEL	RED	GLD	N/A	1/2	N.C. INITIATING (SECURITY MONITORING EOLR)	4090-9001 IDNET IAM
4081-9015	734-093	1.5K	BRN	GRN	RED	GLD	N/A	1/2	CURRENT LIMITED N.O. INIT. (SECURITY MONITORING EOLR)	4090-9001 IDNET IAM
4081-9016	734-149	150K	BRN	GRN	YEL	GLD	N/A	1/2		
4081-9017	734-171	3.9K	ORG	WHT	RED	GLD	N/A	1		
4081-9018	734-168	10K	BRN	BLK	ORG	GLD	N/A	1	70VRMS CONSTANT SUPV. NACS	4100-1260
	378-090	8.2K	GRAY	RED	RED	GLD	N/A	1/2	SECURITY MONITORING (EOLR)	4100, 4100U
	378-046	5.6K	GRN	BLU	RED	GLD	N/A	1/2	N.O. SECURITY MON. (SERIES)	4100, 4100U
	378-069	12K	BRN	RED	ORG	GLD	N/A	1/2	N.C. SECURITY MON. (SHUNT)	4100, 4100U

* USE WITH RETROFIT OR HIGH CURRENT MODULE

INITIATING DEVICE DIP SWITCH SETTINGS

SIMPLEX IDNet

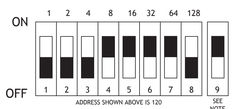

DIP SWITCHES 5 THRU 8

DIP SWITCHES 1 THRU 4

	0	16	32	48	64	80	96	112	128	144	160	176	192	208	224	240
0		16	32	48	64	80	96	112	128	144	160	176	192	208	224	240
1	1	17	33	49	65	81	97	113	129	145	161	177	193	209	225	241
2	2	18	34	50	66	82	98	114	130	146	162	178	194	210	226	242
3	3	19	35	51	67	83	99	115	131	147	163	179	195	211	227	243
4	4	20	36	52	68	84	100	116	132	148	164	180	196	212	228	244
5	5	21	37	53	69	85	101	117	133	149	165	181	197	213	229	245
6	6	22	38	54	70	86	102	118	134	150	166	182	198	214	230	246
7	7	23	39	55	71	87	103	119	135	151	167	183	199	215	231	247
8	8	24	40	56	72	88	104	120	136	152	168	184	200	216	232	248
9	9	25	41	57	73	89	105	121	137	153	169	185	201	217	233	249
10	10	26	42	58	74	90	106	122	138	154	170	186	202	218	234	250
11	11	27	43	59	75	91	107	123	139	155	171	187	203	219	235	251
12	12	28	44	60	76	92	108	124	140	156	172	188	204	220	236	252
13	13	29	45	61	77	93	109	125	141	157	173	189	205	221	237	253
14	14	30	46	62	78	94	110	126	142	158	174	190	206	222	238	254
15	15	31	47	63	79	95	111	127	143	159	175	191	207	223	239	255

NOTE:
THE 4098-9771, -9794, -9795, -9798 SOUNDER BASES HAVE A 9-POSITION DIP SWITCH. THE FIRST EIGHT DIP SWITCHES SET THE SOUNDER BASE ADDRESS. DIP SWITCH POSITION 9 IS SET TO OFF OR ON DEPENDING UPON THE SOUNDER BASE POWER SOURCE. WHEN THE SOUNDER BASE IS CONNECTED TO A 24 VDC POWER SOURCE, DIP SWITCH POSITION 9 IS SET TO "OFF" AND THE 24 VDC POWER IS SUPERVISED BY THE SOUNDER BASE. WHEN THE SOUNDER BASE IS POWERED BY THE PANEL'S NOTIFICATION APPLIANCE CIRCUIT (NAC), DIP SWITCH POSITION 9 IS SET TO "ON" AND THE POWER IS SUPERVISED BY THE NAC AND NOT THE SOUNDER BASE. THE 4098-9770 AND -9797 BASES HAVE THE SAME LAYOUT, BUT DOESN'T OFFER SOUNDER FUNCTIONALITY. THEY USE AN 8-WAY DIP SWITCH ONLY.

TrueAlert NON-ADDRESSABLE APPLIANCES

SIMPLEX 4906 SERIES WALL MOUNTED VISUAL

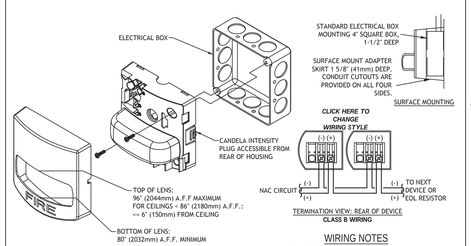

MOUNTING OPTION "B"

TERMINATION VIEW: REAR OF DEVICE
CLASS B WIRING

WIRING NOTES

1. MAINTAIN CORRECT POLARITY ON TERMINAL CONNECTIONS.
2. ALWAYS CUT CONDUCTORS AND SECURE UNDER TERMINALS. NEVER LOOP WIRES UNDER TERMINALS.
3. ANY WIRE SPLICES TO BE MADE BY LISTED AND AHJ APPROVED METHODS.

MOUNTING OPTIONS		
OPTION[1]	DESCRIPTION	NOTE
A	SINGLE GANG BOX, 1-1/2" (64mm) DEEP	BY OTHERS. WHEN SURFACE MOUNTING USE 4905-9937 (RED) OR 4906-9940 (WHITE) SKIRT
B	4" (102mm) SQUARE BOX, 1-1/2" (38mm) DEEP, MINIMUM	
D	2 GANG BOX, 1-1/2" (38mm) DEEP	
C	SIMPLEX 2975-9145, 7-7/8"H x 5-1/8"W x 2-3/4"D (127mm x 98mm x 56mm) REQUIRES 4905-9931 PLATE	ORDERED SEPARATELY

1. FOR ADDITIONAL MOUNTING OPTIONS, DOWNLOAD DATA SHEET 4906-0002 FROM HTTP://WWW.SIMPLEX-FIRE.COM

ADDRESSABLE PULL STATIONS

SIMPLEX 4009 SERIES

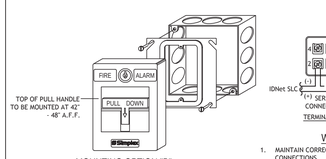

MOUNTING OPTION "B"

TERMINATION VIEW: DEVICE REAR
CLASS B WIRING

WIRING NOTES

1. MAINTAIN CORRECT POLARITY ON TERMINAL CONNECTIONS.
2. ALWAYS CUT CONDUCTORS AND SECURE UNDER TERMINALS. NEVER LOOP WIRES UNDER TERMINALS.
3. ANY WIRE SPLICES TO BE MADE BY LISTED AND AHJ APPROVED METHODS.

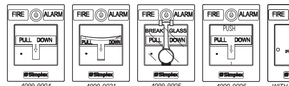

MOUNTING OPTIONS		
OPTION[1]	BACK BOX SPECIFICATION	NOTES
A	SINGLE GANG BOX, 2-1/2" (64mm) DEEP	BY OTHERS
B	4" (102mm) SQUARE BOX, 2-1/8" DEEP (MIN) W/ SINGLE GANG COVER PLATE 3/4" (19mm) EXTENSION	BY OTHERS
C	5H x 3-7/8"W x 2-3/16"D (127mm x 98mm x 56mm)	SIMPLEX 2975-9022, ORDERED SEPARATELY
D	5-3/4"H x 3-7/8"W x 2-3/16"D (133mm x 102mm x 56mm)	SIMPLEX 2975-9178, ORDERED SEPARATELY

1. FOR ADDITIONAL MOUNTING OPTIONS, DOWNLOAD DATA SHEET 4099-0005 FROM HTTP://WWW.SIMPLEX-FIRE.COM

MULTI-VOLTAGE RELAY

SIMPLEX 2088-9021 / APOLLO AMERICA PAM-1

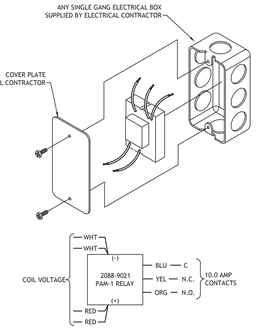

WIRING NOTES

1. MAINTAIN CORRECT POLARITY ON CONNECTIONS.
2. ANY WIRE SPLICES TO BE MADE BY LISTED AND AHJ APPROVED METHODS. CLASS B APPLICATIONS ONLY.

FOR ADDITIONAL DETAILS SEE DATA SHEET 2088-0010 ON HTTP://WWW.SIMPLEX-FIRE.COM.

STANDARD SENSOR BASE

SIMPLEX 4098-9792

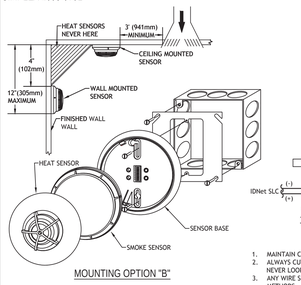

MOUNTING OPTION "B"

TERMINATION VIEW: DEVICE REAR
CLASS B WIRING

WIRING NOTES

1. MAINTAIN CORRECT POLARITY ON TERMINAL CONNECTIONS.
2. ALWAYS CUT CONDUCTORS AND SECURE UNDER TERMINALS. NEVER LOOP WIRES UNDER TERMINALS.
3. ANY WIRE SPLICES TO BE MADE BY LISTED AND AHJ APPROVED METHODS.

MOUNTING OPTIONS		
OPTION[1]	DESCRIPTION	NOTE
A	SINGLE GANG BOX, 2-1/2" (64mm) DEEP	BY OTHERS
B	4" (102mm) SQUARE BOX, 1-1/2" (38mm) DEEP MINIMUM W/ SINGLE ADAPTER BRACKET	BY OTHERS
C	4" (102mm) OCTAGONAL BOX, 1-1/2" (38mm) DEEP, MINIMUM	BY OTHERS
D	ADAPTER PLATE KIT (FOR 4" SQUARE/OCTAGONAL SURFACE MOUNTED ELECTRICAL BOX)	SIMPLEX 4098-9832 ORDERED SEPARATELY

1. FOR ADDITIONAL MOUNTING OPTIONS, DOWNLOAD DATA SHEET 4098-0019 FROM HTTP://WWW.SIMPLEX-FIRE.COM

ADDRESSABLE INPUT MODULE

SIMPLEX 4090-9001 (IAM)

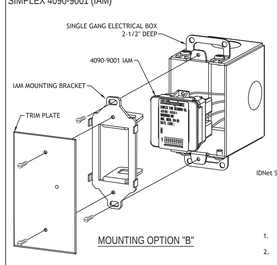

MOUNTING OPTION "B"

TERMINATION VIEW: DEVICE REAR
CLASS B WIRING

WIRING NOTES

1. MAINTAIN CORRECT POLARITY ON TERMINAL CONNECTIONS.
2. ALWAYS CUT CONDUCTORS AND SECURE UNDER TERMINALS. NEVER LOOP WIRES UNDER TERMINALS.
3. ANY WIRE SPLICES TO BE MADE BY LISTED AND AHJ APPROVED METHODS.

MOUNTING OPTIONS		
OPTION[1]	DESCRIPTION	NOTE
A	SINGLE GANG BOX, 2-1/2" (64mm) DEEP WITH SINGLE GANG COVER PLATE	BY OTHERS
B	SINGLE GANG BOX, 2-1/2" (64mm) DEEP WITH SIMPLEX 4090-9810 IAM MOUNTING BRACKET AND SIMPLEX 4090-9806 TRIM PLATE FOR SEMI-FLUSH MOUNTED BOX	BOX BY OTHERS, PLATES ORDERED SEPARATELY
C	SINGLE GANG BOX, 2-1/2" (64mm) DEEP WITH SIMPLEX 4090-9810 IAM MOUNTING BRACKET AND SIMPLEX 4090-9807 TRIM PLATE FOR SURFACE MOUNTED BOX	BOX BY OTHERS, PLATES ORDERED SEPARATELY

1. FOR ADDITIONAL MOUNTING OPTIONS, DOWNLOAD DATA SHEET 4090-0001 FROM HTTP://WWW.SIMPLEX-FIRE.COM
2. OR EQUIVALENT EQUIPMENT

MAGNETIC SURFACE MOUNT DOOR HOLDERS

DH24120S

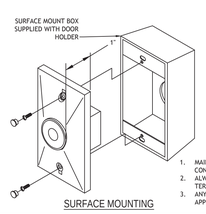

SURFACE MOUNTING

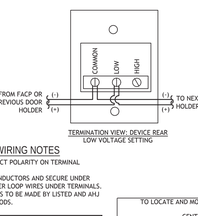

TERMINATION VIEW: DEVICE REAR
LOW VOLTAGE SETTING

WIRING NOTES

1. MAINTAIN CORRECT POLARITY ON TERMINAL CONNECTIONS.
2. ALWAYS CUT CONDUCTORS AND SECURE UNDER TERMINALS. NEVER LOOP WIRES UNDER TERMINALS.
3. ANY WIRE SPLICES TO BE MADE BY LISTED AND AHJ APPROVED METHODS.

Y = DIMENSION OF DOOR	28	30	32	34	36	38	40	42	44	46	48
X	Z = THE INTERSECTION OF X AND Y (THE DIMENSION BETWEEN WALL AND OUTLET BOX)										
2	26	28	29-7/8	32	34	36	38	40	42	43-7/8	45-5/8
4	26	28	29-7/8	32	34	36	38	40	42	43-7/8	45-5/8
6	25-7/8	27-5/8	29-5/8	31-3/4	33-3/4	35-3/4	37-3/4	39-3/4	41-3/4	43-5/8	45-3/8
8	25-1/4	27-1/4	29-1/4	31-3/8	33-1/2	35-1/2	37-3/8	39-1/2	41-1/2	43-3/8	45-1/4
10	24-5/8	26-3/4	28-3/4	30-7/8	33	35	37	39-1/8	41-1/8	43	44-7/8
12	23-3/4	25-7/8	28	30-1/8	32-1/4	34-3/8	36-3/8	38-1/2	40-5/8	42-1/2	44-3/8
14	23-3/4	25	27-1/4	29-3/8	31-1/2	33-3/4	35-7/8	38	40	42	43-7/8
16	21-3/4	24	26-1/4	28-1/2	30-3/4	33	35-1/8	37-1/4	39-3/8	41-3/8	43-3/8
18	20	22-1/2	25	27-3/8	29-3/4	32	34-1/4	36-1/2	38-5/8	40-5/8	42-1/2
20	18-1/4	21	23-1/2	26	28-1/2	30-7/8	33-1/8	35-1/2	37-5/8	39-5/8	41-5/8
22		18-3/4	21-5/8	24-3/8	27	29-3/8	31-3/4	34-1/8	36-1/2	38-5/8	40-3/4
24				22-1/2	25-1/2	28-1/8	30-5/8	33-1/8	35-5/8	37-7/8	40
26						26-1/4	29	31-5/8	34-1/4	36-1/2	38-5/8
28								29-3/4	32-1/2	34-7/8	37-1/8
30								27-3/4	30-5/8	33	35-3/8
32										31-3/8	33-7/8

X = DIMENSION OF DOOR JAMB TO WALL

1. REFER TO DRAWING & CHART TO LOCATE OUTLET BOX.
2. INSTALL THE OUTLET BOX ON THE HORIZONTAL CENTER LINE 5" FROM TOP OF DOOR.

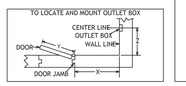

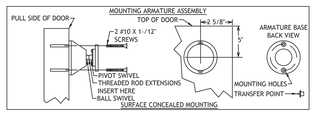

MOUNTING ARMATURE INSTRUCTIONS

1. WITH DOOR MAGNET SECURELY FASTENED, ALIGNED AND ENERGIZED, PROCEED WITH SWIVEL BASE ASSEMBLY.
2. ATTACH SWIVEL PORTION OF MAGNET, BEING CAREFUL TO CENTER CATCH PLATE OVER MAGNET.
3. WITH CATCH PLATE ASSEMBLY ATTACHED MAGNETICALLY TO DOOR MAGNET, PEEL ADHESIVE BACKING OFF MOUNTING TEMPLATE AND SLIDE OVER CATCH PLATE, MAKING SURE ADHESIVE SIDE FACES DOOR.
4. GENTLY CLOSE DOOR AND WITH ONE HAND ADJUST BASE OF CATCH PLATE TO LIE FLAT AGAINST DOOR.
5. WHILE KEEPING SLIGHT PRESSURE ON DOOR, SLIDE MOUNTING TEMPLATE OVER CATCH PLATE TO DOOR SURFACE AND APPLY PRESSURE TO TEMPLATE IN A FEW SPOTS.
6. OPENING DOOR WILL REVEAL MOUNTING TEMPLATE. APPLY FINAL PRESSURE TO INSURE TEMPLATE DOES NOT FALL OFF WHILE ASSEMBLY TAKES PLACE.
7. INSERT ALIGNMENT TEMPLATE INTO CENTER OF MOUNTING TEMPLATE. USE TAB TO ROTATE FOR FINE ADJUSTMENT. WHILE HOLDING ALIGNMENT TEMPLATE WITH ONE HAND, REMOVE ADHESIVE BACKING OF TAB, THEN PUSH FLAT AGAINST DOOR.
8. IF USING OPTIONAL DOOR BACK PLATE, CENTER PUNCH POINTS INDICATED ON ALIGNMENT TEMPLATE FOR EITHER HORIZONTAL OR VERTICAL MOUNTING. FOR BEST RESULTS DRILL 1/8" PILOT HOLE FIRST, THEN FOLLOW WITH 5/16" DIA. DRILL, DRILL STRAIGHT THROUGH DOOR.
9. IF MOUNTING CATCH PLATE ASSEMBLY DIRECTLY TO DOOR, DRILL 1/8" DIA PILOT HOLE APPROXIMATELY 1 TO 1 1/2" DEEP, BEING CAREFUL NOT TO GO THROUGH DOOR.
10. FOR EITHER STYLE OF MOUNTING (THRU DOOR/DIRECT) REMOVE ONLY ALIGNMENT TEMPLATE, THEN PLACE SWIVEL IN CENTER ALIGN HOLES, THEN INSERT SCREWS AND TIGHTEN ASSEMBLY FULLY. LASTLY, REMOVE MOUNTING TEMPLATE.

ADDRESSABLE RELAY MODULE

SIMPLEX 4090-9002

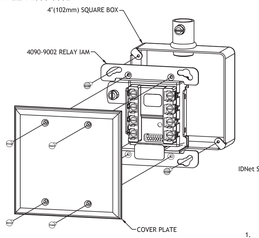

MOUNTING OPTION "B"

TERMINATION VIEW
CLASS B WIRING

WIRING NOTES

1. MAINTAIN CORRECT POLARITY ON TERMINAL CONNECTIONS.
2. ALWAYS CUT CONDUCTORS AND SECURE UNDER TERMINALS. NEVER LOOP WIRES UNDER TERMINALS.
3. ANY WIRE SPLICES TO BE MADE BY LISTED AND AHJ APPROVED METHODS.

MOUNTING OPTIONS		
OPTION	DESCRIPTION	NOTE
A	4" (102mm) SQUARE BOX, 2-1/8" MINIMUM DEPTH WITH DOUBLE GANG COVER PLATE.	BY OTHERS
B	4" (102mm) SQUARE BOX, 2-1/8" MINIMUM DEPTH WITH SIMPLEX 4090-9801 TRIM PLATE FOR SEMI-FLUSH MOUNTED BOX	BOX BY OTHERS, PLATES ORDERED SEPARATELY
C	4" (102mm) SQUARE BOX, 2-1/8" MINIMUM DEPTH WITH SIMPLEX 4090-9802 TRIM PLATE FOR SURFACE MOUNTED BOX	BOX BY OTHERS, PLATES ORDERED SEPARATELY

1. FOR ADDITIONAL MOUNTING OPTIONS, DOWNLOAD DATA SHEET 4090-0002 FROM HTTP://WWW.SIMPLEX-FIRE.COM

TrueAlert™ NON-ADDRESSABLE MULTI-CANDELA AUDIBLE/VISIBLE NOTIFICATION APPLIANCE

(ELECTRONIC CHIME W/STROBE)

PRODUCT INFORMATION

FEATURES:

- VISIBLE NOTIFICATION LISTED TO UL 1971
- AUDIBLE NOTIFICATION LISTED TO UL 464 FOR PRIVATE OPERATING MODE
- CLASS B (STYLE Y) OPERATION REQUIRES CONNECTION TO A COMPATIBLE SMARTSYNC NAC OR TO SMARTSYNC CONTROL MODULE (SCM) 4905-9938
- CLASS A (STYLE Z) OPERATION WHEN CONNECTED TO THE 4905-9938 SCM OR 4100U SERIES FIRE ALARM CONTROL PANEL NAC'S

SPECIFICATIONS:

- HOUSING DIMENSIONS (INCLUDING LENS) : 5 1/8"H X 5" W X 2 3/4"D
- TEMPERATURE RANGE: 32° F TO 122° F (0° TO 50° C)
- HUMIDITY RANGE: 10% TO 93% NON-CONDENSING AT 100° F (38° C)
- TERMINAL BLOCKS FOR 18 AWG TO 12 AWG; TWO WIRES PER TERMINAL FOR IN/OUT WIRING.

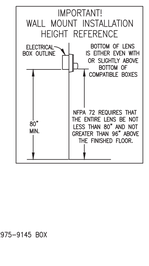

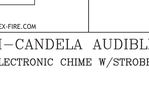

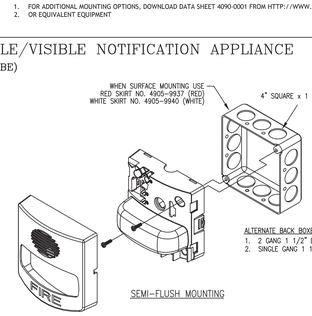

ALTERNATE BACK BOXES
1. 2 GANG 1 1/2" DEEP BOX
2. SINGLE GANG 1 1/2" DEEP BOX

SEMI-FLUSH MOUNTING

CHIME

- SOUND OUTPUT CHARACTERISTICS: TONE IS ADJUSTABLE FROM 750 HZ TO 1300 HZ; FACTORY SETTING IS 800 HZ
- CHIME SOUND OUTPUT RATINGS @ 10 FT. (3m) SOUND OUTPUT IS ADJUSTABLE FROM 34 DBA TO 63 DBA; FACTORY SETTING IS 63 DBA

STROBE

- RATED VOLTAGE RANGE: UL: REGULATED 24VDC PER UL 1971 ULC: 20VDC TO 30VDC PER ULC S526-M878
- FLASH RATE: 1Hz
- SYNCHRONIZED MODE NAC LOADING: MAXIMUM OF 35 SYNCHRONIZED STROBES PER NAC CIRCUIT.

*CURRENT DRAWS REFLECT STROBE FLASHING AND CHIME ON.

MODEL NUMBER	HOUSING COLOR	LETTERING COLOR	STROBE RATING	RMS CURRENT @ 16 VDC	18 VDC	24 VDC
4906-9133	RED	WHITE	15cd	70 mA	62 mA	47 mA
			30cd	105 mA	93 mA	70 mA
			75cd	200 mA	178 mA	133 mA
			110cd	265 mA	236 mA	177 mA
4906-9134	WHITE	RED	15cd	70 mA	62 mA	47 mA
			30cd	105 mA	93 mA	70 mA
			75cd	200 mA	178 mA	133 mA
			110cd	265 mA	236 mA	177 mA

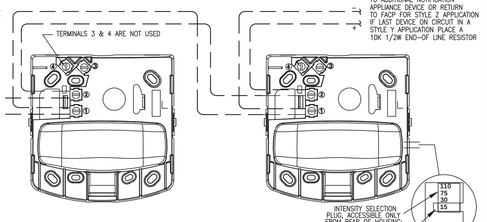

NAC EXTENDER PANEL WIRING

SIMPLEX 4009 SERIES

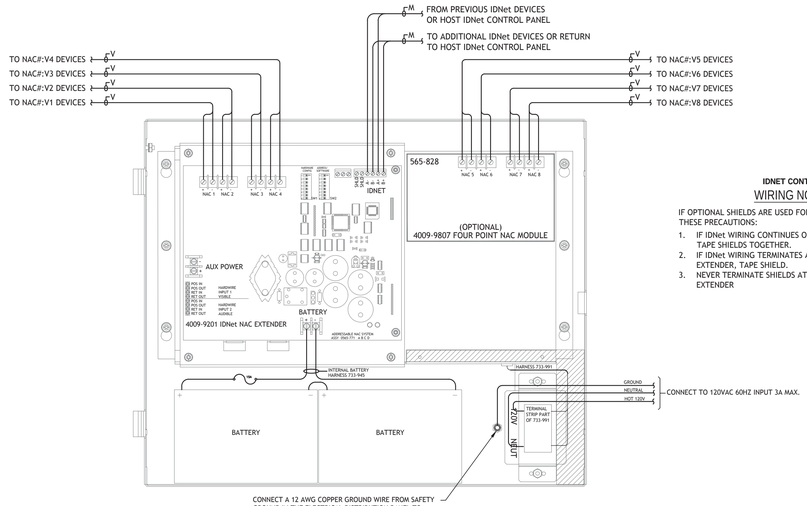

IDNET CONTROL

WIRING NOTES

IF OPTIONAL SHIELDS ARE USED FOR IDNet WIRING, FOLLOW THESE PRECAUTIONS:

1. IF IDNet WIRING CONTINUES ON TO ANOTHER DEVICE, TAPE SHIELDS TOGETHER.
2. IF IDNet WIRING TERMINATES AT THE 4009 IDNet NAC EXTENDER, TAPE SHIELD.
3. NEVER TERMINATE SHIELDS AT THE 4009 IDNet NAC EXTENDER

NICET CERTIFICATION

TECHNICAL AREA 00303: LEVEL 3
CERTIFICATE #: 83242
VALID THROUGH: 10/01/17

STEVE SHARP — 11/29/16 DATE

tyco SimplexGrinnell
Safer. Smarter. Tyco.™
DISTRICT 148
10065 GRANT CRT CIRCLE #100
AURORA, CO 80012
SERVICE: 303-355-5500
PHONE: 303-355-9500
FAX: 303-355-5615

3RD FLOOR PEDIATRICS RENOVATION
MEDICAL CENTER OF AURORA

MEDICAL CENTER OF AURORA
1501 S. POTOMAC ST.
AURORA, CO 80012

ISSUE LOG					
MARK	DATE	CAD	CHK	DESCRIPTION	
1	11/14/16	RV

Fire Alarm System Acceptance Inspection

2009 IFC and 2007 NFPA 72

This worksheet is for jurisdictions that permit the use of 2007 NFPA 72 in lieu of IFC's referenced 2002 NFPA 72.

Date of Inspection: _____ Permit Number: _____

Business/Building Name: Medical Center of Aurora-3rd Floor Pediatrics Renovation Address of Project: 1501 S POTOMAC ST

Contractor: MC2 ELECTRICAL CONTRACTORS Contractor's Phone: (303) 453-0284

Reference numbers following worksheet statements represent an NFPA code section unless otherwise specified.

	Pass	Fail	NA	General
1.				Obtained a copy of the fire alarm installation certification and a Record of Completion from installer, 4.5.2.1.
2.				Approved plans are on site.
3.				Fire alarm control unit (FACU) and remote annunciator (RA) are installed consistent with approved plans, 4.4.6.1.1. and 7.10.
4.				A zone and legend map is provided at the RA or an approved location.
5.				Fire alarm zones are properly identified on the FACU and RA panels.
6.				The fire alarm system power supply is a dedicated 120 AC branch circuit, which is labeled, 4.4.1.4.2.2.
7.				Type and gauge of wire or cable(s) for each circuit are consistent with the plans.
8.				Device location and installation are consistent with the plans.
9.				Pull stations are installed at the proper height and location, 42 in. to 48 in. and within the 200 ft. maximum travel distance, 5.13 and IFC 907.5.2.1 and 907.5.2.2.
10.				A Contractor Sound Pressure Level (dBA) Pretest Room Log is provided and verified with the use of a sound meter during a sound pressure test.
Operational				
11.				Fire alarm audible notification devices sound throughout the occupancy providing a sound pressure level at least a minimum of 15 dBA above the average ambient noise level or 5 dBA above the maximum noise level. For bedrooms with closed door provide at least 75 dBA at the pillow, 7.4.4.1, IFC 907.6.2.1.1.
12.				Fire alarm audible devices are a three-pulse temporal pattern unless they were permitted to match existing audible devices, 6.8.6.5.1.
13.				Fire alarm visual notification device intensity (cd) ratings and settings, mounting height (80 in. to 96 in.), and location, are consistent with the plans, 7.5.4.1.
14.				Emergency voice/ alarm communications systems is tested and documentation is provided documenting the verbal statement(s) are distinguishable and understandable, Table 10.4.2.2.15(b).
15.				In sprinklered buildings, the fire alarm notification devices will activate by operation of the sprinkler flow alarm.
16.				HVAC duct detectors are supervised by the fire alarm system, detectors are all tested to verify if they can sample the air stream, fans shut down upon activation and visual and audible status alarm functions, Table 10.4.2.2.14(g).
17.				A central, remote or proprietary monitoring service received various signals during system tests.
18.				Verify that the correct and distinctive signals are received (alarm, trouble, and supervisory alarms), 4.4.3.3, 10.4.1.1
19.				Two monitoring circuits are provided, both circuits send correct signals to monitoring company within 90 seconds, Table 10.4.2.2.16.
20.				Verify proper operation of magnetic door-releasing hardware and/or ventilation shutdown.
21.				Sprinkler tamper switch activation transmits a trouble signal at the annunciator panel.
22.				Fire department communications system, if provided, is operational.
23.				For air sampling and flame detectors, test the device in accordance with the manufacturer's instructions.
24.				Restoreable heat and smoke detectors, and pull stations are tested.
25.				Trouble condition is created for each circuit and the FACU responds appropriately.
26.				Remote annunciator displays the correct zone and device information.

27. ____|____ | ____ Battery load test: the system is switched to battery operation 24 hours before the test and in the presence of the inspector the notification devices are activated and operate for 5 minutes or 15 minutes for emergency voice alarms.
28. ____|____ | ____ Check battery charger, measure load voltage, and open circuit voltage.
29. ____|____ | ____ Test ground-fault monitoring circuit, if provided.
30. ____|____ | ____ Under primary and secondary power, perform these tests:
    - ____|____ | ____ A. power light on and in normal condition, trouble signal when on secondary power.
    - ____|____ | ____ B. supervisory signals: fire pump power loss or phase reversal, water level/temp, pressure switches, control valves, etc.
    - ____|____ | ____ C. silence switch functions.
    - ____|____ | ____ D. a 2nd alarm initiating zone overrides silence switch.
    - ____|____ | ____ E. trouble signals and FACU panel lights operate for each circuit tested; disconnect .wires from devices and primary power supply to simulate trouble conditions.
    - ____|____ | ____ F. on secondary power, measure standby and alarm current demand.
    - ____|____ | ____ G. trouble and alarm reset switches operate.
    - ____|____ | ____ H. emergency voice alarms: the message is clear and distinct.
    - ____|____ | ____ I. initiating devices tested, audible sound pressure levels, and visuals operate.
    - ____|____ | ____ J. panel lamp test switch operates: if provided.
    - ____|____ | ____ K. field zones and device address signals corresponded with panel zones and addresses.
    - ____|____ | ____ L. elevator(s) recall to designated floor and alternate floor in accordance with 6.16.3.
31. ____|____ | ____ Other systems activate fire alarm: kitchen hood suppression system, clean agent, etc.
32. ____|____ | ____ As-builts are required when system installation is not consistent with the plans.
33. ____|____ | ____ Circuit loop resistance is within specifications and a test may be required if the system wiring has changed from the plans.
34. ____|____ | ____ Heat and spot smoke detectors are not within 4 in. of the sidewall, or if on the sidewall, the detector is 4 in. to 12 in. from the ceiling, 5.6.3.1, 5.7.3.2.1.
35. ____|____ | ____ Visual devices in a room or adjacent space with more than 2 devices within the field of view the flash are synchronized, 7.5.4.1.2(3). Devices in a corridor with more than 2 devices within the field of view and a maximum spacing of 100 ft., are synchronized, 7.5.4.2.5 and 7.5.4.2.7.
36. ____|____ | ____ Visual devices are wall mounted 80 in. to 96 in. above the floor level unless otherwise permitted by the approved plans and the fire code official, 7.5.4.1.
37. ____|____ | ____ Supplemental (extra) visual devices are permitted to be mounted less than 80 in. above the floor, 7.7.2.
38. ____|____ | ____ Ceiling-mounted devices are listed for use and spaced in accordance with Table 7.5.4.1.1(b) and the approved plans.

*Note: additional testing criteria is found in NFPA 72: Chapter 10.

Additional Comments:

Inspection Date: _____ Approved or Disapproved FD Inspector: _____

Inspection Date: _____ Approved or Disapproved FD Inspector: _____

Fire Alarm Installation Certification

Permit #: _____ Date: _____

	Property Protected	System Installer	System Supplier
Business Name:			
Address:			
Representative:			
Telephone:			

Location of Plans: _____

Location of Owner's Manual: _____

1. Certification of System Installation: Complete this section after system is installed, but prior to conducting operational acceptance tests. Check wiring for opens, ground faults, and improper branching.

This system installation was inspected and found to comply with the installation requirements of:

_____ NFPA 72
_____ Article 760 of NEC
_____ Manufacturer's Instructions
_____ Other (specify; FM, UL, etc.) _____

Print Name: _____

Signed: _____ Date: _____

Organization: _____

2. Certification of System Operation: All operational features and functions of this system were tested and found to be operating properly in accordance with the requirements of:

_____ NFPA 72
_____ Design Specifications
_____ Manufacturer's Instructions
_____ Other (specify) _____

Print Name: _____

Signed: _____ Date: _____

Organization: _____

RSN: ***1167880***
Permit #: ***2016-1214781-LT***

tyco
Fire & Security

SimplexGrinnell

14200 E Exposition Ave
Aurora, Co 80012
Tel: (303) 355-0500
Fax: (303) 355-0615

Ted Caviness
City of Aurora – Building Division
15151 E Alameda Pky, Ste 2400
Aurora, CO 80012

Re: Plan review Med Cntr of Aurora 3rd Flr Pediatrics Renovation
Project ID - 1167880
12/13/2016

Ted, Per our conversation and your review comments dated 12/6/16 and have researched the sequence of operation for the Medical Center of Aurora at 1501 S. Potomac St and have confirmed that the facility is a General Alarm facility. The reference on the Sequence of Operation on rows 18, 19 and 20 are revised to read Operating rooms instead of smoke compartment (rows 9 and 20 are deleted). Upon receipt of an alarm condition the facility actives all audible and visual notification throughout. The operating rooms have a single strobe each that is only activated when a smoke detector in the respective OR and adjacent corridor is in alarm, so these strobes do not activate on GA.

With respect to NFPA 72 7.3 audible notification is intended to be private mode. Audibility will be tested in the field to confirm compliance with code.
With respect to NFPA 7.3.9 notification circuits originate from a NAC power supply located on the same floor and wing as the area of scope. Circuits are Class B with Level 0 survivability. Initiating devices tie into existing SLC that originates from the 2nd level of the tower. It is Class B with Level 0 survivability; this matches existing conditions in the facility in this area.

Please let us know if we can furnish any other information to aid in your review process.
If you should have any questions please contact me at 719-499-5292.

Thank you,

Steve Sharp
Denver Design Team Manager
NICET Cert # 83242
719-499-5292
ssharp@simplexgrinnell.com

RSN: ***1167880***
Permit #: ***2016-1214781-LT***

SIMPLEXGRINNELL
14200 E. Exposition Avenue
Aurora, CO 80012

www.simplexgrinnell.com

303-355-0500

Fire Alarm
Product Data Submittal for:

TMCA
3rd Floor Peds Renovation
1501 S. Potomac St.
Aurora, CO 80012

Prepared for:

MC2 Electric Contractor
88 Lipan Street
Denver, CO 80223

RSN: *1167880*
Permit #: *2016-1214781-LT*

TABLE OF CONTENTS

I. SUBMITTAL DATA SHEETS

A. 4009 Series NAC Extender ----------S4009-0002
B. True*Alarm*® Analog Sensors; Compatible Bases and Accessories----------S4098-0019
C. TrueAlarm Sensor Guard----------S4098-0035
D. Non-Addressable Initiating Peripherals- 2-Wire Electronic Heat Detectors S4098-0014
E. IDNet Model 4090-9001 Addressable Monitor Module ----------S4090-0001
F. Non-Addressable Initiating Peripherals- 2-Wire Electronic Heat Detectors S4098-0014
G. Addressable Manual Station ----------S4099-0005
H. Individual Addressable Relay Module----------S4090-0002
I. MR-100, 200Series Control Relays----------S2088-0010
J. True*Alert*® Multi Candela Visual Notification Appliances ----------S4902-0003
K. True*Alert*® Multi Candela Audio Visual Notification Appliances ----------S4906-0003
L. STI-Protective Cover----------STI-1210-215
M. RSG Electromagnetic Door Holder ----------S2088-0014
N. System Batteries ----------S2081-0006

II. SYSTEM DRAWINGS

A. Cover Sheet ---------- FA-000
B. Device Placement Plan ---------- FA-101
C. Interim Life Safety Plan ---------- FA-102
D. Partial Riser Diagram---------- FA-201
E. Calculations---------- FA-601
F. Typical Details---------- FA-701

RSN: *1167880*
Permit #: *2016-1214781-LT*

Simplex®

LifeAlarm Fire Alarm Controls

*UL, ULC, CSFM Listed; FM Approved; MEA (NYC) Acceptance**

4009 IDNet NAC Extender for Control with IDNet Communications or Conventional NACs

Features

Provides additional notification appliance circuit (NAC) capacity with flexible operation modes and power-limited design

Four, Class B NACs are standard:

- Rated 2 A each for conventional reverse polarity 24 VDC notification appliances and providing multiple operation modes
- Can be selected to provide synchronization for Simplex® visible notification strobe flashes
- Capable of controlling TrueAlert non-addressable notification appliances operating with SmartSync two-wire control mode**

Input control options:

- IDNet addressable communications from a Simplex model 4007ES, 4010, 4010ES, 4100ES, or 4100U Fire Alarm Control Panel**
- Or from one or two conventional 24 VDC NACs with multiple output control options

IDNet communications control benefits:

- Provides status monitoring and individual NAC control using a single address per 4009 IDNet NAC Extender
- Supports IDNet "Device Level" earth fault location

WALKTEST operation is available with either input choice

Internal 8 A power supply/battery charger:

- Charges internal batteries up to 12.7 Ah or up to 18 Ah batteries in external cabinet
- Provides status monitoring of battery, input power, and earth faults
- Rated 8 A for "Special Application" appliances; including Simplex 4901, 4903, 4904, and 4906 Series horns, strobes, horn/strobes, and speaker/strobes
- Rated 6 A for "Regulated 24 DC" appliance power

Optional 4009 IDNet NAC Extender modules:

- IDNet Communications Repeater provides Class B or Class A output
- IDNet Communications Fiber Optic Receiver/Repeater, available as Class B or Class X
- Four additional Class B NACs, rated 1.5 A for Special Application appliances; 1 A for Regulated 24 DC appliance power
- Class A, Two Circuit Adapter Module

UL Listed to Standard 864

External Accessories

IDNet communication fiber optic transmitters:

- For applications requiring the data integrity available with fiber optic communications
- Available as Class B or Class X
- Mounts in standard six-gang electrical box

External battery cabinet for 18 Ah batteries

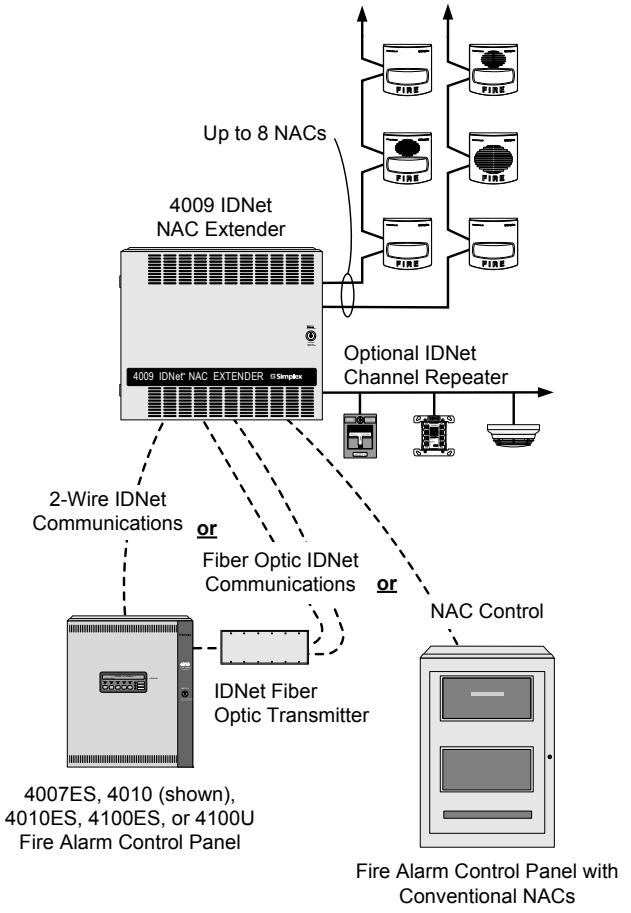

4009 IDNet NAC Extender Connection Reference Drawing

Introduction

ADA Compliance. Complying with the notification requirements of ADA (Americans with Disabilities Act) may require more notification appliance power than is available within the fire alarm control panel. When additional power is required, a Simplex 4009 IDNet NAC Extender can provide up to 8 A of NAC power with up to eight, supervised reverse polarity NACs.

Location Flexibility. The 4009 IDNet NAC Extender can be mounted close to a compatible dedicated host panel or can be located remotely for convenient power distribution. Multiple operation modes and multiple connection options further increase location flexibility.

Additional Information. For additional operation detail and application information, refer to Installation Instructions 574-181 and field wiring diagram 842-068.

* ULC listed model is 4009-9202CA. This product has been approved by the California State Fire Marshal (CSFM) pursuant to Section 13144.1 of the California Health and Safety Code. See CSFM Listing 7300-0026:214 for allowable values and/or conditions concerning material presented in this document. Accepted for use – City of New York Department of Buildings – MEA35-93E. Additional listings may be applicable; contact your local Simplex product supplier for the latest status. Listings and approvals under Simplex Time Recorder Co. are the property of Tyco Fire Protection Products.

** 4100U requires revision 11 software or higher for compatibility. 4010 requires revision 2 software or higher for compatibility.

RSN: *1167880*
Permit #: *2016-1214781-LT*

Application and Operation Information

IDNet Addressable Communications Compatible. Up to ten (10), 4009 IDNet NAC Extenders can be controlled per 4007ES, 4010ES, 4100ES, or 4100U IDNet communications channel; up to five (5) can be controlled on the 4010 IDNet communications channel. Each output NAC can be individually controlled for general alarm or selective area notification requiring only one point address per Extender. Individual Extender NACs can also be manually controlled from the host panel. IDNet controlled extenders will inform the host panel of troubles via IDNet communications. 4007ES, 4010ES, 4100ES, and 4100U control panels control using multi-point rules, refer to data sheet S4090-0011 for details.

Optional IDNet Repeaters. IDNet communications can be repeated with the optional IDNet Repeater Module or with the optional Fiber Optic Receiver Module. Up to 100 of the IDNet channel points can be repeated once (refer to pages 3 and 5 for details). Repeated IDNet communications also support the "device level" earth fault location utility of the host panel.

Hardwire Control Applications. For applications where an existing (or new) conventional NAC needs additional power, the 4009 IDNet NAC Extender can be controlled directly from the NAC. Either one or two NACs, from either the same, or from different host fire alarm control panels, can be connected to control the 4009 IDNet NAC Extender output NACs. Multiple control selections provide flexible operation. (Refer to page 4 for more detail.) Alarms from the host panel will activate the four, 4009 IDNet NAC Extender NACs (or optionally, eight NACs) to extend the alarm.

The 4009 IDNet Extender monitors itself and each of its output NACs for trouble conditions, including earth faults. Extenders wired to conventional NACs will indicate a trouble by opening the path to the NAC's end-of-line resistor, but retaining the ability to respond to alarms. Individual troubles are also annunciated by LEDs located on the 4009 IDNet NAC Extender main circuit board. (Refer to page 7 for more diagnostic information.)

Product Selection

Standard Models

Model	Description	
4009-9201**	120 VAC input	4009 IDNet NAC Extender with 4, Class B NACs and 8 A power supply
4009-9202CA*		
4009-9301	240 VAC input	

* ULC listed model

** 4009-9201 has been seismic tested and is certified to IBC and CBC standards as well as to ASCE 7 categories A through F, requires battery brackets as detailed on data sheet S2081-0019

Optional Modules (for on-site installation)

Model	Description		Comments
4009-9807	Additional four point NAC module, rated 1.5 A Special Application appliances; 1 A for Regulated 24 DC appliance power, Class B		One maximum
4009-9808	Dual Class A adapter (for two NAC outputs)		Select as required (4 maximum)
4009-9809	IDNet Repeater, output is Class A or Class B		Select **either** an IDNet Repeater **or** a Fiber Optic Receiver as required; one transmitter can connect to one receiver
4009-9810	Fiber Optic Receiver	Class B	
4009-9811		Class A (IDNet), Class X (fiber)	
4009-9805	Red Appliqué for door		Select if required
2975-9801	Semi-Flush Trim Kit	Beige trim	1-7/16" wide (78 mm), use if required for semi-flush installations
2975-9802		Red trim	

Battery Selection (select battery size per system requirements)

Model	Description	Comments
2081-9272	6.2 Ah Battery, 12 VDC	Two batteries are required, 24 VDC operation
2081-9274	10 Ah Battery, 12 VDC	
2081-9288	12.7 Ah Battery, 12 VDC	
2081-9275	18 Ah Battery, 12 VDC	Requires external battery cabinet, two batteries are required, 24 VDC operation

External Accessories (select per system requirements)

Model	Description		Comments
4090-9105	IDNet Fiber Optic Transmitter	Class B operation	Mounts in six-gang electrical box, refer to page 4 for mounting details
4090-9107		Class X operation	
4009-9801	External battery cabinet for up to 18 Ah batteries, beige		16-1/4" W x 13-1/2" H x 5-3/4" D (413 mm x 343 mm x 146 mm)
4081 Series	End-of-Line Resistor Harnesses; see data sheet S4081-0003 for details		

RSN: ***1167880***
Permit #: ***2016-1214781-LT***

Typical IDNet Connection Example

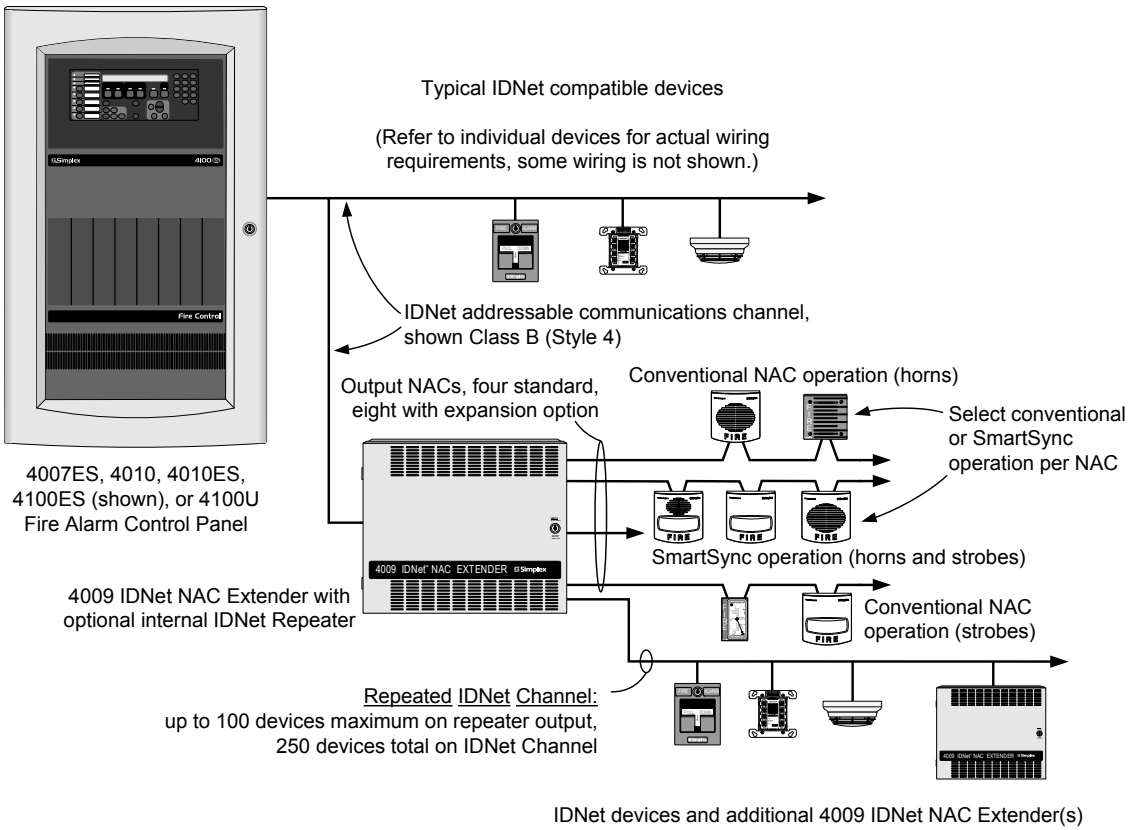

NOTE: Up to ten (10) 4009 IDNet NAC Extenders may be connected per 4007ES, 4010ES, 4100ES, or 4100U IDNet channel, up to five (5) on the 4010 IDNet channel. IDNet communications can be repeated only once (can pass through only one series connected repeater or one fiber optic receiver).

Typical Fiber Optic System Connections

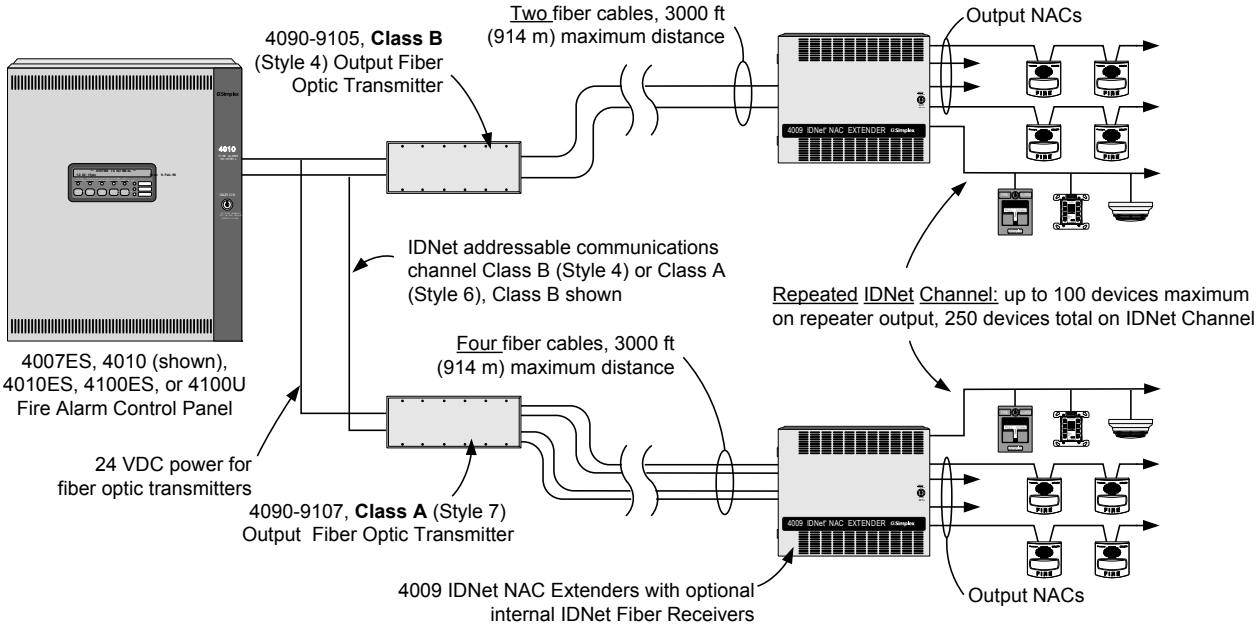

NOTE: Up to ten (10) 4009 IDNet NAC Extenders may be connected per 4007ES, 4010ES, 4100ES, or 4100U IDNet channel, up to five (5) on the 4010 IDNet channel. IDNet communications can be repeated only once (can pass through only one series connected repeater or one fiber optic receiver). Fiber optic transmitters connect to only one receiver in a 4009 IDNet NAC Extender.

RSN: *1167880*
Permit #: *2016-1214781-LT*

Hardwire Control Connection Information

NAC Input Selections. The 4009 IDNet NAC Extender can be selected to:

- Track input NAC operation **or** to provide a locally generated code, selectable per NAC input
- If selected for local coding, NAC outputs can be either **Temporal Coded** or **60 Beats/min March Time Coded,** one code selection per extender (input NACs must be on continuous with Alarm)
- Additionally, NAC outputs can be selected to provide the Simplex strobe synchronization signal. This signal will synchronize the flashes of synchronized strobes but will be ignored by free-run strobes and audible devices. (Strobes are for operation by noncoded NACs.)

NAC input to NAC output control can be selected for standard and optional NACs per the following table:

Conventional NAC Output Operation Options

Input	A	B	C
NAC 1	NACs 1 & 2, 5 & 6	NACs 1-4	NACs 1-8
NAC 2	NACs 3 & 4, 7 & 8	NACs 5-8	None

SmartSync NAC Output Operation

Input	NAC Control Function	
NAC 1	Strobe Control	All NAC outputs (1-8)
NAC 2	Horn Control	

SmartSync Notification Appliance Control

The TrueAlert Notification Appliance product line includes addressable and non-addressable operation. Non-addressable models are available with 2-wire SmartSync operation or conventional 4-wire operation. The following details apply to use with the 4009 IDNet NAC Extender:

- TrueAlert non-addressable models with SmartSync operation allow audible notification to be separately controlled over the same wire pair that controls visible notification
- 4009 IDNet NAC Extenders can be selected to provide SmartSync operation whether controlled by IDNet communications or conventional NACs
- IDNet control allows output NACs to be **individually selected** for conventional **or** SmartSync operation
- With NAC input control, **all** output NACs are selected for either conventional **or** SmartSync operation
- Refer to data sheet S4009-0003 for TrueAlert Addressable operation details, contact your local Simplex product supplier for further information on specific TrueAlert notification appliances

Hardwire Control NAC Connection One-Line Reference Diagram

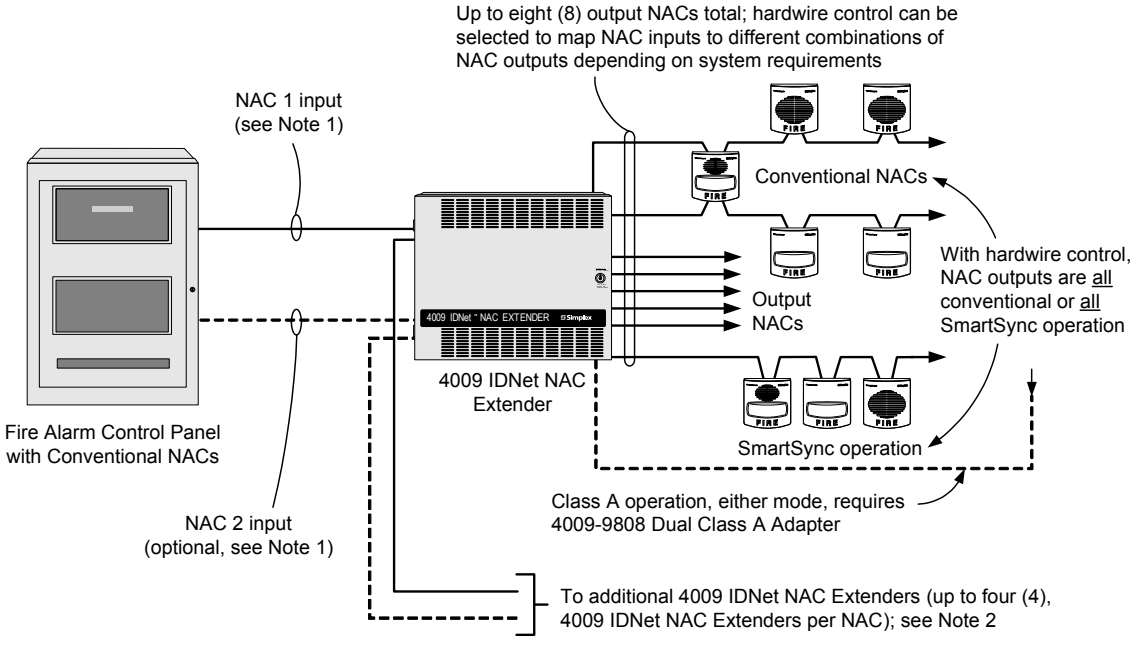

Notes:

1. For separate audible and visible output NAC control, or SmartSync NAC output operation, two (2) input NACs are required. NAC 1 is "on-until-reset" and NAC 2 is "on-until-silenced."
2. To synchronize strobe flash outputs for up to four (4) 4009 IDNet NAC Extenders, use the synchronized strobe output from a Synchronized Flash Module (4905-9914 for Class B operation, 4905-9922 for Class A operation) or, if available, from a NAC selected to provide synchronized strobe flash output. **NOTE: DO NOT USE a NAC selected for SmartSync operation for this function.**

Refer to Installation Instructions 574-181 for additional information and application guidance

RSN: *1167880*
Permit #: *2016-1214781-LT*

4009 IDNet NAC Extender Specifications

Input Ratings	120 VAC Input (4009-9201)	3A @ 102-132 VAC, 60 Hz
	240 VAC Input (4009-9301)	1.5A @ 204-264 VAC, 50/60 Hz
	Hardwire Control from External NACs, Input Requirements	Conventional reverse polarity operation
		5 mA maximum; 16 to 33 VDC
Output Ratings	Total Rating	8 A, Special Application appliances 6 A, Regulated 24 DC appliance power
	Standard NACs	2 A each, Special Application or Regulated 24 DC appliance power
	Optional NACs (requires 4009-9807)	1.5 A each, Special Application appliances 1 A each, Regulated 24 DC appliance power
	Special Application Appliances	Simplex non-addressable horns, strobes, and combination horn/strobes and speaker/strobes (contact your Simplex product representative for compatible appliances)
	Regulated 24 DC Appliances	Power for other UL listed appliances; use associated external synchronization modules where required
	Strobe Operation	Up to 33 strobes per NAC can be synchronized; output NACs configured for Simplex synchronized strobe operation are synchronized to each other
	Auxiliary Output	500 mA @ 24 VDC nominal

Optional Modules Ratings

IDNet Repeater Module (4009-9809)	Input Power	70 mA @ 24 VDC, system supplied
	IDNet Input, One Address	Maximum distance from IDNet source is 2500 ft (762 m)
	IDNet Output Specifications	Repeated IDNet output for up to 100 devices (total IDNet devices not to exceed 250 per channel)
		Maximum distance to farthest device is 2500 ft (762 m)
		Total distance including “T-taps” is 10,000 ft (3048 m)
		Class A loop maximum distance is 2500 ft (762 m), no “T” taps
Fiber Optic Receiver Modules		
Input Current		4009-9810, Class B, 65 mA @ 24 VDC, system supplied
		4009-9811, Class X, 80 mA @ 24 VDC, system supplied
IDNet Output Specifications		Same as those for Repeater Module (see above)
Fiber Optic Transmission Distance		3000 ft (914 m) maximum
General (LED status indicators are listed on page 7, dimensions and mounting details are on page 6)		
Operating Temperature		32° to 120° F (0° to 49° C)
Operating Humidity Range		10% to 90% RH from 32° F to 104° F (0° C to 40° C)
Wiring Connections*		Terminal blocks for 18 AWG (stranded) to 12 AWG (solid)

Fiber Optic Transmitter Specifications

Input Voltage	18.9-32 VDC from compatible listed fire alarm supply
Input Current	4090-9105, Class B, 30 mA @ 24 VDC
	4090-9107, Class X, 35 mA @ 24 VDC
Fiber Optic Connections and cable requirements	Multimode, graded index, 50/125µm, 62.5/125 µm, 100/40 µm, or 200 µm
	Type ST connectors
	4090-9105, Class B operation, two fiber cables required
	4090-9107, Class X operation, four fiber cables required
Module Size (with mounting bracket)	6-13/16” W x 3-3/4” H x 1-1/8” D (173 mm x 95 mm x 29 mm)
On-board Status Indicators	Green LED flashing = transmit
	Red LED flashing = receive
	Separate red LED on 4090-9107 = Class X receive
Communications	Simplex IDNet
Fiber Optic Transmission Distance	3000 ft (914 m) maximum
Wiring Connections*	Terminal blocks for 18 AWG (stranded) to 12 AWG (solid)
Operating Humidity	10% to 90% RH from 32° to 104° F (0° to 40° C)
Operating Temperature	32° F to 120° F (0° to 49° C)

* Metric wire equivalents: 18 AWG = 0.82 mm^2; 12 AWG = 3.31 mm^2

RSN: *1167880*
Permit #: *2016-1214781-LT*

4009 IDNet NAC Extender Mounting and Module Placement Information

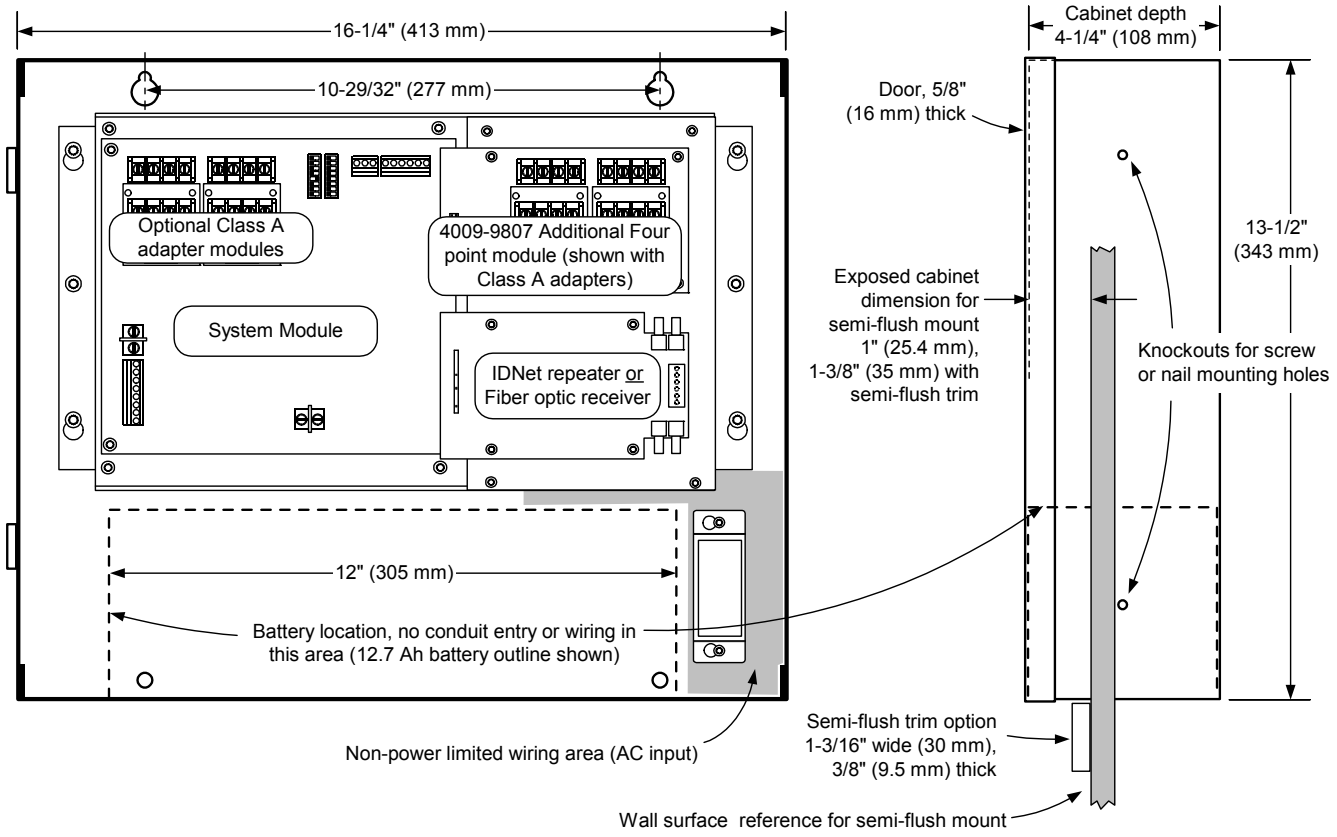

NOTE: Recommended conduit entrance varies with module selection. Refer to general installation instructions 574-181, specific module installation instructions, and to field wiring diagrams 842-068 before locating conduit entrance.

4009 IDNet NAC Extender Cabinet with Door Detail

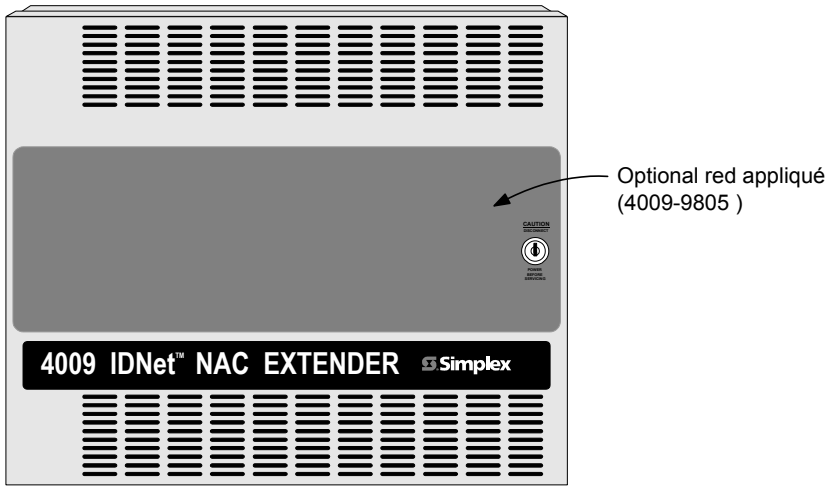

4090-9105/9107 IDNet Fiber Optic Transmitter Mounting Information

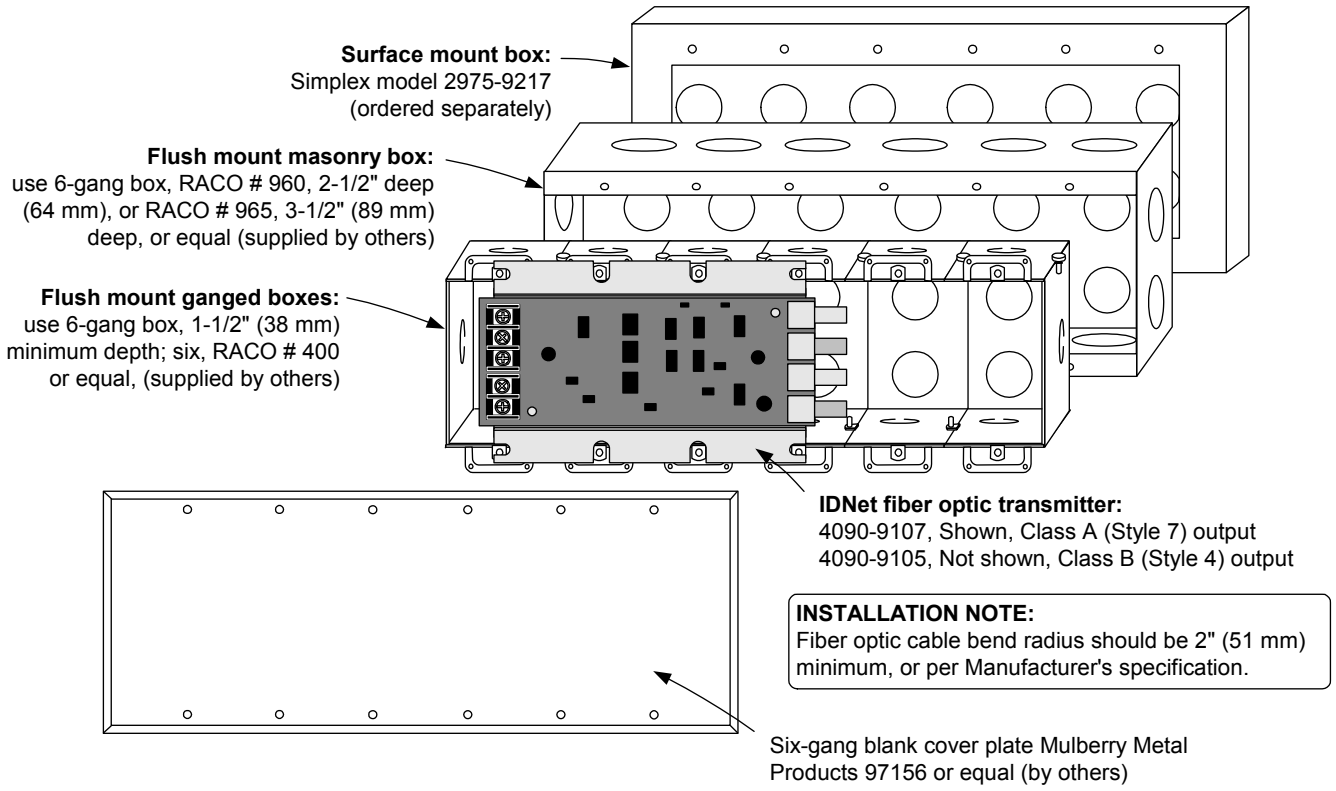

Service Diagnostic Features

Power-up Self-Diagnostics. Upon power-up, the 4009 IDNet NAC Extender tests each module and performs earth fault diagnostics. Trouble conditions are communicated to the host control panel and are also displayed on diagnostic status LEDs in the 4009 IDNet NAC Extender. When connected via IDNet communications, detailed status information is available at the host. When controlled with conventional NAC inputs, common troubles are signaled by providing a polarized open circuit that disconnects the NAC wiring from its end-of-line resistor but still allows a reversed polarity alarm to be received.

Door Mounted Reference Label. The 4009 IDNet NAC Extender has a detailed programming and diagnostic label inside the front door that provides a quick reference for both installation and checkout.

LED Status Indicators are provided for the following:

- **Each NAC** (standard and optional) has a dedicated yellow LED that:
  - During supervision provides a slow flash to indicate a short circuit condition and a fast flash to indicate an open circuit
  - During an alarm, the LED follows the NAC output (on steady or flashing with coded output)
- **Four, general status yellow LEDs** provide nine separate indications listed in priority of urgency. As a trouble is eliminated, any remaining trouble(s) will then be indicated until the 4009 IDNet NAC Extender is returned to normal operation.
- **AC power status** is indicated by a green LED that is on when AC is normal. During low AC (brownout) conditions or with no AC, the LED is off. Additional power and battery status is indicated by the general status LEDs.

RSN: ***1167880***
Permit #: ***2016-1214781-LT***

4009 IDNet NAC Extender Current Calculation Chart

Step 1. Calculate Basic Extender Battery Requirements (minus NAC loads)

Panel, NAC Options, and Auxiliary Power (underlined model numbers are optional modules)

Model	Description		Supervisory Current	Actual Supervisory	Alarm Current	Actual Alarm
4009-9201	120 VAC input	Basic Panel	85 mA	85 mA	185 mA	185 mA
4009-9301	240 VAC input					
4009-9807	Additional Four Point NAC		40 mA	+_____	40 mA	+_____
4009-9808	Dual Class A Adapter (no additional current)		–	–	–	–
Auxiliary Power Output			(500 mA maximum)	+_____	(500 mA maximum)	+ **[A1]** _____
				Basic Panel Supervisory Current		= **[S1]** _____
					Basic Panel Alarm Current	= **[A2]** _____

Step 2. Calculate IDNet Output Module and Device Current (if used)

4009-9809	IDNet Repeater	Select one per Extender	70 mA	+_____	70 mA	+_____
4009-9810*	Fiber Optic Receiver, Class B		65 mA		65 mA	
4009-9811*	Fiber Optic Receiver, Class X		80 mA		80 mA	
IDNet Devices (connected to Repeater or Receiver above), 0.7 mA each, maximum of 100			Total devices x 0.7 mA each	+_____	Total devices x 0.7 mA each	+_____
				IDNet Module Supervisory Current		**[S2]** = ____
					IDNet Module Alarm Current	= **[A3]** _____

* Note: IDNet Fiber Optic Transmitter current is supplied from the host fire alarm control panel

Step 2. Calculate Available NAC Current

Maximum Available Current	**= 8 A***
Subtract Auxiliary Power Output	**- [A1]** _____
Subtract IDNet Module Current	**- [A3]** _____
Available NAC Current	**= [A4]** _____

* 8 A for Special Application Appliances; 6 A for Regulated 24 DC Appliances

Step 3. Calculate Actual NAC Loading (Limited to Available NAC Current per Step 2.)

NAC Type	NAC Circuit #	NAC Alarm Current
Standard Panel NACS, 2 A maximum per NAC	Circuit 1	+_____
	Circuit 2	+_____
	Circuit 3	+_____
	Circuit 4	+_____
Optional Four Point NAC Module, 1.5 A maximum Special Application rating, 1 A maximum Regulated 24 DC rating, per NAC	Circuit 5	+_____
	Circuit 6	+_____
	Circuit 7	+_____
	Circuit 8	+_____
	Total Actual NAC Load Alarm Current	= **[A5]** _____

Step 4. Calculate Total Supervisory Current

Total Supervisory Current = Basic Panel Current **[S1]** + IDNet Module Current **[S2]** = _____

Step 5. Calculate Total Alarm Current

Total Alarm Current = Basic Panel Current **[A2]** + IDNet Module Current **[A3]** + Actual NAC Current **[A5]** = _____

TYCO, SIMPLEX, and the product names listed in this material are marks and/or registered marks. Unauthorized use is strictly prohibited.

© 2015 Tyco Fire Protection Products. All rights reserved. All specifications and other information shown were current as of document revision date and are subject to change without notice.

RSN: *1167880*
Permit #: *2016-1214781-LT*

Simplex®

True*Alarm* Analog Sensing

*UL, ULC, CSFM Listed; FM Approved; MEA (NYC) Acceptance**

TrueAlarm Analog Sensors – Photoelectric and Heat; Standard Bases and Accessories

Features

TrueAlarm analog sensing provides:

- Digital transmission of analog sensor values via IDNet or MAPNET II two-wire communications

For use with the following Simplex® products:

- 4007ES, 4010, 4010ES, 4100ES, and 4100U Series control panels; and 4008 Series control panels with reduced feature set (refer to data sheet S4008-0001 for details)
- 4020, 4100, and 4120 Series control panels, Universal Transponders, and 2120 TrueAlarm CDTs equipped for MAPNET II operation

Fire alarm control panel provides:

- Peak value logging allowing accurate analysis of each sensor for individual sensitivity selection
- Sensitivity monitoring satisfying NFPA 72 sensitivity testing requirements; automatic individual sensor calibration check verifies sensor integrity
- Automatic environmental compensation, multi-stage alarm operation, and display of sensitivity directly in percent per foot
- Ability to display and print detailed sensor information in plain English language

Photoelectric smoke sensors provide:

- Seven levels of sensitivity from 0.2% to 3.7% (refer to additional information on page 3)

Heat sensors provide:

- Fixed temperature sensing
- Rate-of-rise temperature sensing
- Utility temperature sensing
- Listed to UL 521 and ULC-S530

General features:

- Operation is for ceiling or wall mounting
- Listed to UL 268 and ULC-S529
- Louvered smoke sensor design enhances smoke capture by directing flow to chamber; entrance areas are minimally visible when ceiling mounted
- Designed for EMI compatibility
- Magnetic test feature is provided
- Different bases are available to support a supervised or unsupervised output relay, and/or a remote LED alarm indicator

Additional base reference:

- For isolator bases, refer to data sheet S4098-0025
- For sounder bases, refer to data sheet S4098-0028
- For photo/heat sensors, refer to data sheet S4098-0024 (single address) and S4098-0033 (dual address)

* These products have been approved by the California State Fire Marshal (CSFM) pursuant to Section 13144.1 of the California Health and Safety Code. See CSFM Listings 7272-0026:218, 7271-0026:231, 7270-0026:216, and 7300-0026:217 for allowable values and/or conditions concerning material presented in this document. Accepted for use – City of New York Department of Buildings – MEA35-93E. Additional listings may be applicable, contact your local Simplex product supplier for the latest status. Listings and approvals under Simplex Time Recorder Co. are the property of Tyco Fire Protection Products.

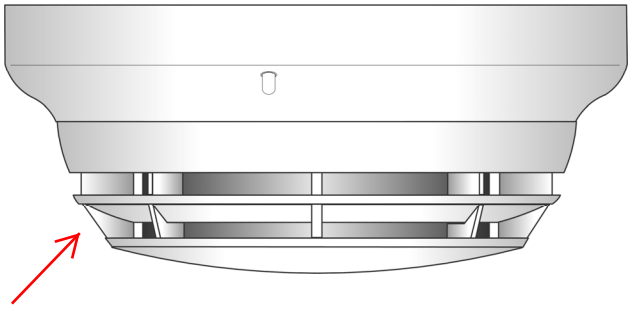

4098-9714 TrueAlarm Photoelectric Sensor Mounted in Base

Description

Digital Communication of Analog Sensing. TrueAlarm analog sensors provide an analog measurement digitally communicated to the host control panel using Simplex addressable communications. At the control panel, the data is analyzed and an average value is determined and stored. An alarm or other abnormal condition is determined by comparing the sensor's present value against its average value and time.

Intelligent Data Evaluation. Monitoring each sensor's average value provides a continuously shifting reference point. This software filtering process compensates for environmental factors (dust, dirt, etc.) and component aging, providing an accurate reference for evaluating new activity. With this filtering, there is a significant reduction in the probability of false or nuisance alarms caused by shifts in sensitivity, either up or down.

Control Panel Selection. Peak activity per sensor is stored to assist in evaluating specific locations. The alarm set point for each TrueAlarm sensor is determined at the host control panel, selectable as more or less sensitive as the individual application requires.

Timed/Multi-Stage Selection. Sensor alarm set points can be programmed for timed automatic sensitivity selection (such as more sensitive at night, less sensitive during day). Control panel programming can also provide multi-stage operation per sensor. For example, a 0.2% level may cause a warning to prompt investigation while a 2.5% level may initiate an alarm.

Sensor Alarm and Trouble LED Indication. Each sensor base's LED pulses to indicate communications with the panel. If the control panel determines a sensor is in alarm, or is dirty or has some other type of trouble, the details are annunciated at the control panel and that sensor base's LED will be turned on steadily. During a system alarm, the control panel will control the LEDs such that an LED indicating a trouble will return to pulsing to help identify the alarmed sensors.

True*Alarm* Sensor Bases and Accessories

Sensor Base Features

Base mounted address selection:

- Address remains with its programmed location
- Accessible from front (DIP switch under sensor)

General features:

- Automatic identification provides default sensitivity when substituting sensor types
- Integral red LED for power-on (pulsing), or alarm or trouble (steady on)
- Locking anti-tamper design mounts on standard outlet box
- Magnetically operated functional test

Sensor Bases

4098-9792, Standard Sensor Base

4098-9789, Sensor Base with wired connections for:

- 2098-9808 Remote LED alarm indicator **or** 4098-9822 relay (relay is unsupervised and requires separate 24 VDC)

Supervised Relay Bases (not compatible with 2120 CDT)**:**

- **4098-9791, 4-Wire Sensor Base,** use with remote or locally mounted 2098-9737 relay, requires separate 24 VDC
- **4098-9780, 2-Wire Sensor Base**, use with remote or locally mounted 4098-9860 relay, no separate power required
- Supervised relay operation is programmable and can be manually operated from control panel
- Includes wired connections for remote LED alarm indicator **or** 4098-9822 relay (relay is unsupervised and requires separate 24 VDC)

Sensor Base Options

2098-9737, Remote or local mount supervised relay:

- DPDT contacts for resistive/suppressed loads, power limited rating of 3 A @ 28 VDC; non-power limited rating of 3 A @ 120 VAC (requires external 24 VDC coil power)

4098-9860, Remote or local mount supervised relay:

- SPDT dry contacts, power limited rating of 2 A @ 30 VDC, resistive; non-power limited rating of 0.5 A @ 125 VAC, resistive

4098-9822, LED Annunciation Relay:

- Activates when base LED is on steady, indicating local alarm or trouble
- DPDT contacts for resistive/suppressed loads, power limited rating of 2 A @ 28 VDC; non-power limited rating of 1/2 A @ 120 VAC, (requires external 24 VDC coil power)

4098-9832, Adapter plate:

- Required for surface or semi-flush mounting to 4” square electrical box and for surface mounting to 4” octagonal box
- Can be used for cosmetic retrofitting to existing 6-3/8” diameter base product

2098-9808, Remote red LED Alarm Indicator:

- Mounts on single gang box (shown in illustration to right)

Description

TrueAlarm sensor bases contain integral addressable electronics that constantly monitor the status of the detachable photoelectric or heat sensors. Each sensor’s output is digitized and transmitted to the system fire alarm control panel every four seconds.

Since TrueAlarm sensors use the same base, different sensor types can be easily interchanged to meet specific location requirements. This feature also allows intentional sensor substitution during building construction. When conditions are temporarily dusty, instead of covering the smoke sensors (causing them to be disabled), heat sensors may be installed without reprogramming the control panel. Although the control panel will indicate an incorrect sensor type, the heat sensor will operate at a default sensitivity providing heat detection for building protection at that location.

Mounting Reference

Electrical Box Requirements: (boxes are by others)

Without relay in the box: 4" octagonal or 4" square, 1-1/2" deep; single gang, 2" deep

With relay in the box : 4" octagonal or 4" square, 1-1/2" deep, with 1-1/2" extension ring

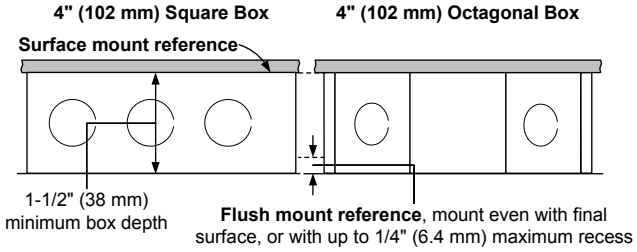

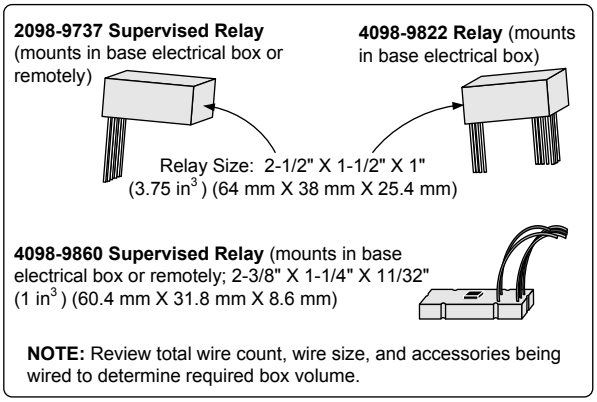

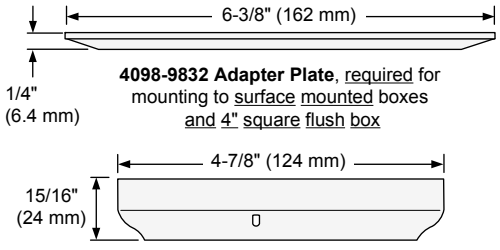

TrueAlarm Bases
4098-9780, 4098-9789, 4098-9791, & 4098-9792

RSN: *1167880*
Permit #: *2016-1214781-LT*

True*Alarm* Sensors

Features

Sealed against rear air flow entry

Interchangeable mounting

EMI/RFI shielded electronics

Heat sensors:

- Selectable rate compensated, fixed temperature sensing with or without rate-of-rise operation
- Rated spacing distance between sensors:

Fixed Temp. Setting	UL & ULC Spacing	FM Spacing, Either Fixed Temperature Setting
135° F (57.2° C)	60 ft x 60 ft (18.3 m)	20 ft x 20 ft (6.1 m) for fixed temperature only; **RTI = Quick**
155° F (68° C)	40 ft x 40 ft (12.2 m)	50 ft x 50 ft (15.2 m) for fixed temperature with either rate-of-rise selection; **RTI = Ultra Fast**

Smoke Sensors:

- Photoelectric technology sensing
- 360° smoke entry for optimum response
- Built-in insect screens

4098-9714 Photoelectric Sensor

TrueAlarm photoelectric sensors use a stable, pulsed infrared LED light source and a silicon photodiode receiver to provide consistent and accurate low power smoke sensing. Seven levels of sensitivity are available for each individual sensor, ranging from 0.2% to 3.7% per foot of smoke obscuration. Sensitivities of 0.2%, 0.5%, and 1% are for special applications in clean areas. Standard sensitivities are 1.5%, 2.0%, 2.5%, 3.0%, and 3.7%. Application type and sensitivity are selected and then monitored at the fire alarm control panel.*

The sensor head design provides 360° smoke entry for optimum response to smoke from any direction. Due to its photoelectric operation, air velocity is not normally a factor, except for impact on area smoke flow.

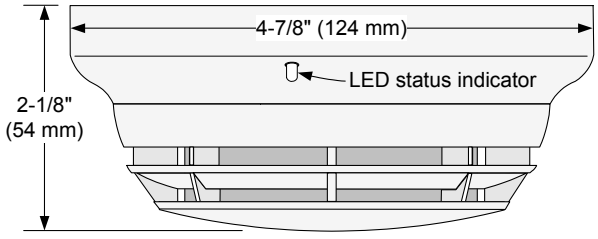

4098-9714 Photoelectric Sensor with Base

4098-9733 Heat Sensor

TrueAlarm heat sensors are self-restoring and provide rate compensated, fixed temperature sensing, selectable with or without rate-of-rise temperature sensing. Due to its small thermal mass, the sensor accurately and quickly measures the local temperature for analysis at the fire alarm control panel.

Rate-of-rise temperature detection is selectable at the control panel for either 15° F (8.3° C) or 20° F (11.1° C) per minute. Fixed temperature sensing is independent of rate-of-rise sensing and programmable to operate at 135° F (57.2° C) or 155° F (68° C). In a slow developing fire, the temperature may not increase rapidly enough to operate the rate-of-rise feature. However, an alarm will be initiated when the temperature reaches its rated fixed temperature setting.

TrueAlarm heat sensors can be programmed as a utility device to monitor for temperature extremes in the range from 32° F to 155° F (0° C to 68° C). This feature can provide freeze warnings or alert to HVAC system problems. *Refer to specific panels for availability.*

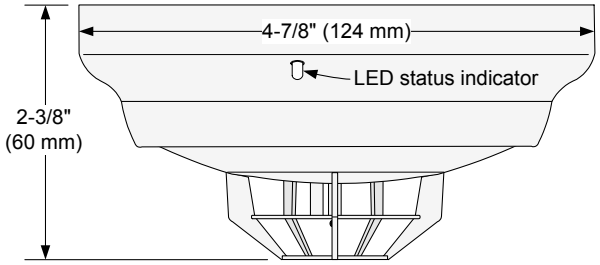

4098-9733 Heat Sensor with Base

WARNING: In most fires, hazardous levels of smoke and toxic gas can build up before a heat detection device would initiate an alarm. In cases where Life Safety is a factor, the use of smoke detection is highly recommended.

Application Reference

Sensor locations should be determined only after careful consideration of the physical layout and contents of the area to be protected. Refer to NFPA 72, the *National Fire Alarm and Signaling Code*. On smooth ceilings, smoke sensor spacing of 30 ft (9.1 m) may be used as a guide.*

* For detailed application information including sensitivity selection, refer to Installation Instructions 574-709.

RSN: ***1167880***
Permit #: ***2016-1214781-LT***

TrueAlarm Analog Sensing Product Selection Chart

TrueAlarm Sensor Bases (for use with Sensors 4098-9714 and 4098-9733)

(Refer to Application Manual 574-709 and Installation Instructions 574-707 for additional information)

Model*	Description	Compatibility	Mounting Requirements
4098-9792	Standard Sensor Base	No options	4" octagonal or 4" square box, 1-1/2" min. depth; or single gang box, 2" min. depth
4098-9789	Sensor Base with connections for Remote LED Alarm Indicator **or** Unsupervised Relay	2098-9808 Remote Alarm Indicator **or** 4098-9822 Unsupervised Relay	4" octagonal or 4" square box **Note:** Box depth requirements depend on total wire count and wire size, refer to accessories list below for reference. ** **NOTE:** 4098-9791 and 4098-9780 are NOT compatible with the 2120 CDT
4098-9789 IND			
4098-9791**	4-Wire Sensor Supervised Relay Base with connections for LED Indicator **or** Unsupervised Relay	2098-9737 Supervised Remote Relay	
		2098-9808 Remote Alarm Indicator **or** 4098-9822 Unsupervised Relay	
4098-9780**	2-Wire Sensor Supervised Relay Base with connections for LED Indicator **or** Unsupervised Relay	4098-9860 Supervised Remote Relay	
		2098-9808 Remote Alarm Indicator **or** 4098-9822 Unsupervised Relay	

TrueAlarm Sensors

Model*	Description	Compatibility	Mounting Requirements
4098-9714	Photoelectric Smoke Sensor	Bases 4098-9792, 4098-9789, 4098-9791, and 4098-9780	Refer to base requirements
4098-9714 IND			
4098-9733	Heat Sensor		

TrueAlarm Sensor/Base Accessories

Model	Description	Compatibility	Mounting Requirements
2098-9737	Supervised Relay, mounts remote or in base electrical box	For use with 4098-9791 base	**Remote Mounting** requires 4" octagonal or 4" square box, 1-1/2" minimum depth **Base Mounting** requires 4" octagonal box, 2-1/8" deep with 1-1/2" extension ring
4098-9860	Supervised Relay, mounts remote or in base electrical box	For use with 4098-9780 base	
2098-9808	Remote Red LED Alarm Indicator on single gang stainless steel plate	Bases 4098-9789, 4098-9791, and 4098-9780	Single gang box, 1-1/2" minimum depth
4098-9822	Unsupervised Relay, tracks base LED status; Note: Mounts only in base electrical box	Bases 4098-9789, 4098-9791, and 4098-9780	4" octagonal box, 2-1/8" deep with 1-1/2" extension ring
4098-9832	Adapter Plate	Bases 4098-9792, 4098-9789, 4098-9791, and 4098-9780	**Required** for surface or semi-flush mounted 4" square box and for surface mounted 4" octagonal box

* **Note:** Model numbers ending in IND are assembled in India.

Specifications

General Operating Specifications		
Communications and Sensor Supervisory Power		IDNet or MAPNET II communications, auto-selected, 1 address per base
Communications Connections		Screw terminals for in/out wiring, 18 to 14 AWG (0.82 mm^2 to 2.08 mm^2)
Remote LED Alarm Indicator Current		1 mA typical, no impact to alarm current
Remote LED Alarm Indicator and Relay Connections		Color coded wire leads, 18 AWG (0.82 mm^2)
UL Listed Operating Temperature Range		32° to 100° F (0° to 38° C)
Operating Temperature Range	with 4098-9733 Heat Sensor	32° to 122° F (0° to 50° C)
	with 4098-9714 Smoke Sensor	15° to 122° F (-9° to 50° C)
Storage Temperature Range		0° F to 140° F (-18° C to 60° C)
Humidity Range		10 to 95% RH
4098-9714 Smoke Sensor Air Velocity Rating		0-4000 ft/min (0-1220 m/min)
Housing Color		Frost White
4098-9791 Base With Supervised Remote Relay 2098-9737 (see page 2 for contact ratings)		
Externally Supplied Relay Coil Voltage		18-32 VDC (nominal 24 VDC)
Supervisory Current		270 μA, from 24 VDC supply
Alarm Current with 2098-9737 Relay		28 mA, from 24 VDC supply
4098-9780 Base With Supervised Remote Relay 4098-9860 (see page 2 for contact ratings)		
Power		Supplied from communications
4098-9822 Unsupervised Relay, Requirements for Bases 4098-9789. 4098-9791, and 4098-9780 (see page 2 for contact ratings)		
Externally Supplied Relay Coil Voltage		18-32 VDC (nominal 24 VDC)
Supervisory Current		Supplied from communications
Alarm Current		13 mA from separate 24 VDC supply

TYCO, SIMPLEX, and the product names listed in this material are marks and/or registered marks. Unauthorized use is strictly prohibited. NFPA 72 and National Fire Alarm and Signaling Code are trademarks of the National Fire Protection Association (NFPA).

© 2015 Tyco Fire Protection Products. All rights reserved. All specifications and other information shown were current as of document revision date and are subject to change without notice.

RSN: ***1167880***
Permit #: ***2016-1214781-LT***

Simplex

*UL, ULC, CSFM Listed**

True*Alarm* Analog Sensing

4098-9846 Sensor Guard for TrueAlarm Sensors

Features

Compatible Simplex® TrueAlarm sensors and bases (ordered separately):

- 4098-9714, Photoelectric sensor
- 4098-9754, Multi-Sensor, Photoelectric and Heat
- 4098-9733, Heat Sensor
- 4098-9792, Standard Sensor Base
- 4098-9791, Relay Control Base
- 4098-9789, LED Output Base
- 4098-9793, IDNet Isolator Base

General features:

- For ceiling or wall mounted sensor applications
- Combines accurate, individually addressable analog smoke and/or heat sensing with physical protection
- TrueAlarm analog sensing provides compensation for air flow restriction by providing maintained high sensitivity
- Photoelectric smoke sensitivity is selectable from 0.5 to 1.5%/ft at the fire alarm control panel
- The host control panel automatically compensates for sensitivity shifts caused by contamination and automatically reports dirty devices
- UL listed to Standard 268 (URRQ) and 521 (UQKE)
- ULC listed to Standard S529 (URRQC) and S530 (UQKEC)

Mounting options:

- Standard mounting of 4098-9846 is for use with flush mounted electrical boxes
- Extension box 4098-9847 is required for mounting to surface mounted electrical box

Tamper resistant design:

- Heavy duty steel construction, single wall
- Tamper resistant grill mounting screws

Description

Sensor Guard 4098-9846 combines the sensitivity and maintained accuracy of Simplex TrueAlarm sensors with a rugged, tamper resistant enclosure. Typical applications are: Correctional/Detention facilities, Mental Hospitals, Industrial areas, Educational facilities, Dormitories, and many other locations where the smoke sensor may be intentionally or accidentally subjected to abuse.

Location Reference. With this combination, the sensor can be located directly in the ceiling of a detention cell or similar area and can provide accurate and quick sensing of smoke and/or heat conditions. Additionally, after removing the tamper resistant hardware, the sensor is readily accessible for cleaning when the TrueAlarm system automatically identifies the need for maintenance.

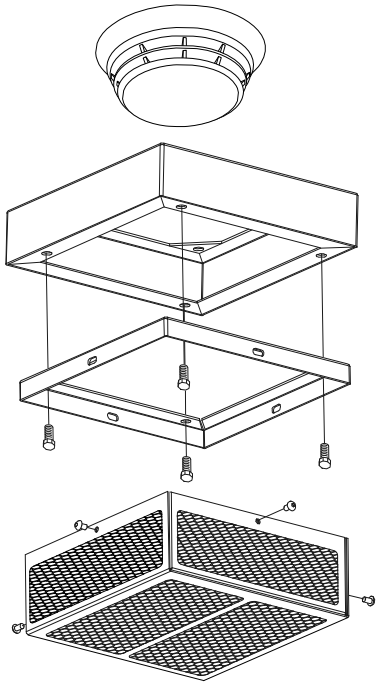

4098-9846 TrueAlarm Sensor Guard Mounting Reference (ceiling mount shown with optional surface mount extension, see page 2 for details)

Specifications

Dimensions	Refer to page 2
Grill Material	Single wall construction, 22 gauge steel (0.025” thick, 0.64 mm)
Perforation Pattern	1/4” (6.4 mm) hex holes staggered on 1/4” (6.4 mm) centers, reinforced at corners
Color/Finish	Tan, baked enamel
Mounting Frame Hardware	Bolts, 1/4”, see page 2
Grill Mounting Screws	Four tamper resistant screws, recessed hex head, supplied with guard
Screw Removal Tool	4098-9823 Secure Hex Key, ordered separately

Additional Reference:

Product	Data Sheet
TrueAlarm Sensors and Bases	S4098-0019
Multi-Sensor 4098-9754	S4098-0024
TrueAlarm IDNet Isolator Base	S4098-0025
Sensor Guard for flush mounted electrical box, ceiling mount only	S4098-0027

* This product has been approved by the California State Fire Marshal (CSFM) pursuant to Section 13144.1 of the California Health and Safety Code. See CSFM Listing 7300-0026:244 for allowable values and/or conditions concerning material presented in this document. It is subject to re-examination, revision, and possible cancellation. This product was not approved by FM as of document revision date. Additional listings may be applicable; contact your local Simplex product supplier for the latest status. Listings and approvals under Simplex Time Recorder Co. are the property of Tyco Fire Protection Products.

RSN: ***1167880***
Permit #: ***2016-1214781-LT***

Mounting Information – IMPORTANT – See Warning and Installation Notes Below

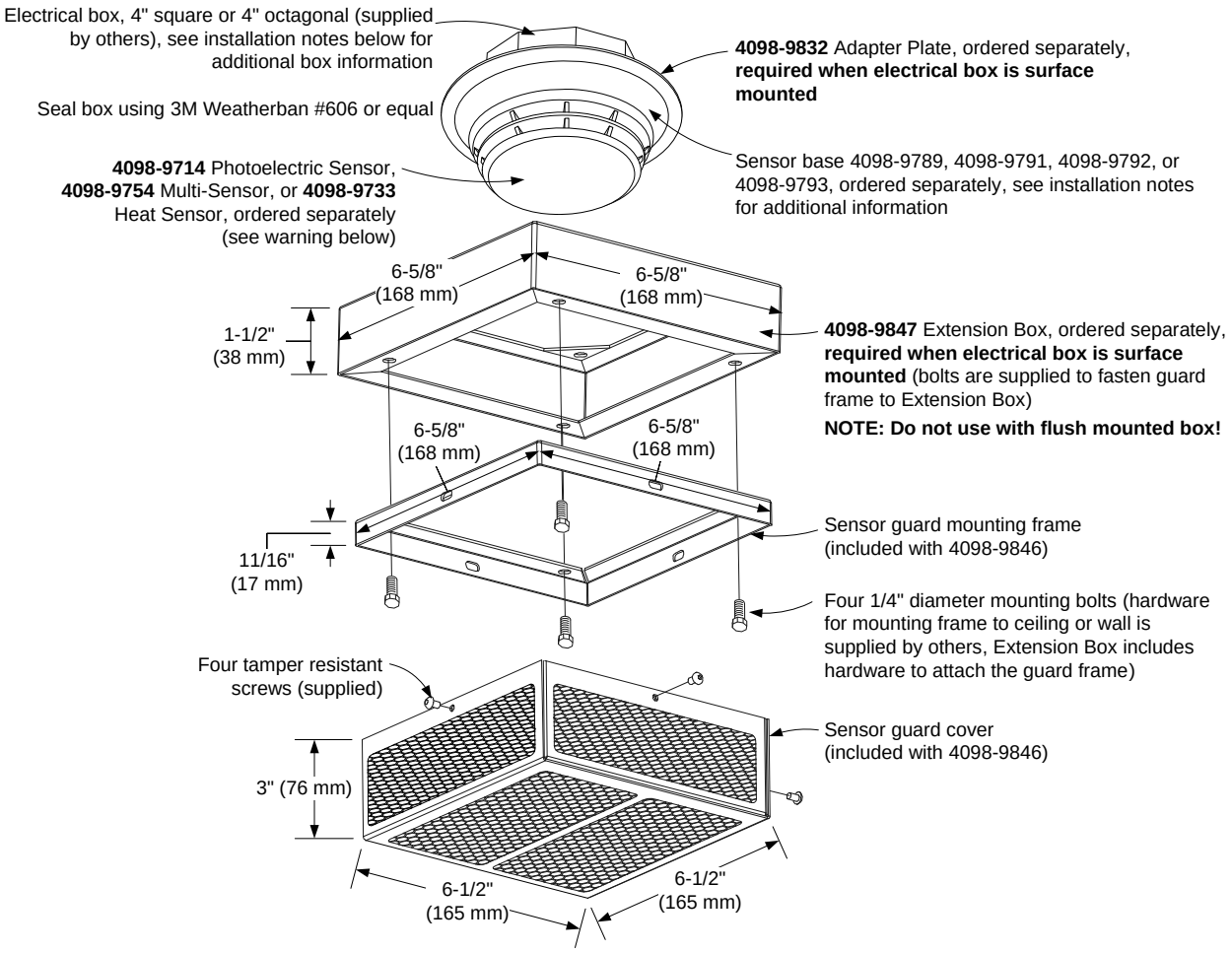

WARNING !

Per NFPA 72, the *National Fire Alarm and Signaling Code*, Section 5.4.3 (2007 Edition): "Where subject to mechanical damage, an initiating device shall be protected. A mechanical guard used to protect a smoke, heat, or radiant energy–sensing detector shall be listed for use with the detector." **Sensor guard 4098-9846 is for use only with a Simplex 4098-9714 Photoelectric Sensor or a 4098-9754 Photo/Heat Sensor with a restricted sensitivity range of 0.5 to 1.5% per foot obscuration; or with a 4098-9733 Heat Sensor; and for use only with sensor bases 4098-9789, 4098-9791, 4098-9792, or 4098-9793.** This will ensure the sensor will activate within the UL listed obscuration range when mounted in the sensor guard.

PLEASE NOTE: For proper performance, follow installation instructions and review sensor and guard locations carefully. Wall mounting may not be appropriate for institutional or detention applications.

Maintenance Issue. The presence of debris on the sensor guard grill will significantly restrict airflow into the sensor. It is recommended that increased visual maintenance be performed to ensure proper operation.

Installation Notes

1. For additional information, refer to Installation Instructions 579-116.
2. Ceiling mount is shown above for reference, if appropriate, installations can be wall mounted.
3. Flush mounted electrical box must be flush to surface or recessed **no more than 1/4"** (6.4 mm). Select box depth to accommodate selected base options.
4. For surface electrical box mounting only, Extension Box 4098-9847 and Adapter Plate 4098-9832 are **both required** (ordered separately). Electrical box must be 1-1/2" deep. **NOTE: Do not use Extension Box 4098-9847 with FLUSH mounted electrical boxes, sensor will not be properly positioned.**
5. Installation to wall or ceiling requires solid anchoring, use 1/4" bolts (by others). Hardware is included with the 4098-9847 Extension Box for mounting the sensor guard frame.

TYCO, SIMPLEX, and the product names listed in this material are marks and/or registered marks. Unauthorized use is strictly prohibited. NFPA 72 and National Fire Alarm Code are trademarks of the National Fire Protection Association (NFPA). Weatherban and 3M are trademarks of the Minnesota Mining and Manufacturing company (3M).

© 2012 Tyco Fire Protection Products. All rights reserved. All specifications and other information shown were current as of document revision date and are subject to change without notice.

RSN: ***1167880***
Permit #: ***2016-1214781-LT***

Simplex®

Non-Addressable Initiating Peripherals

UL, ULC, CSFM Listed; FM Approved;
*MEA (NYC) Acceptance**

Electronic Heat Detectors
for Two-Wire and Four-Wire Bases

Features

Accurate and reliable heat detection for protection of property**

UL listed to Standard 521 as a rate compensated heat detector

Fixed temperature operation is suitable for most applications:

- Thermistor based design is inherently rate compensated due to minimal thermal lag
- Available for 135° F (57° C) or 200° F (93° C)
- UL and ULC spacing distance is 70 ft (21.3 m)

Available with rate-of-rise temperature detection:

- Dual thermistor rate-of-rise operation
- For use where anticipated ambient temperature changes are less than 6° F/minute (3.33° C/minute)
- UL and ULC spacing distance is 70 ft (21.3 m)

Epoxy encapsulated electronic design provides:

- Operation for ceiling or wall mounting
- Easily tested, self-restoring operation with repeatable accuracy
- Alarm indicating LED located on detector
- Current limited alarm that is compatible with two-wire initiating device circuits (IDCs)
- Designed for EMI compatibility

Optional remote alarm indicating LED

Available base options:

- Bases for 2-wire or 4-wire operation
- Auxiliary relay output (refer to selection chart on page 2 for relay ratings)
- Remote alarm indicating LED output

Description

Accurate Electronic Design. Simplex® electronic heat detectors use a fast response, thermistor based design to provide temperature sensing that quickly, accurately, and consistently identifies when fixed temperatures are exceeded. The fixed temperature sensing thermistor readily tracks the local ambient temperature. This eliminates the time required to melt a lead pellet or heat a bimetallic element as occurs in mechanical heat detector designs and provides the required heat detection for most applications.

* This product has been approved by the California State Fire Marshal (CSFM) pursuant to Section 13144.1 of the California Health and Safety Code. See CSFM Listing 7270-0026:221 for allowable values and/or conditions concerning material presented in this document. Accepted for use – City of New York Department of Buildings – MEA35-93E. Additional listings may be applicable, contact your local Simplex product supplier for the latest status. Listings and approvals under Simplex Time Recorder Co. are the property of Tyco Fire Protection Products.

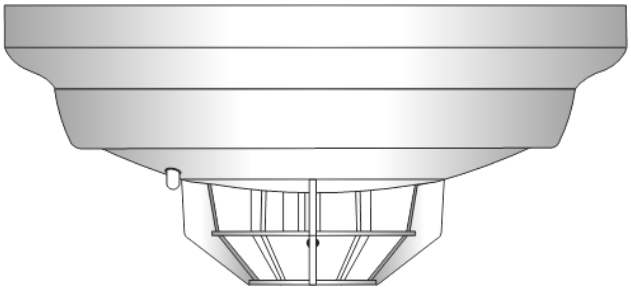

Electronic Heat Detector Mounted in Base

Description *(Continued)*

Rate-of-rise detection is determined by comparing two thermistor responses. By combining accurate thermistors with proper physical placement, this patented† rate-of-rise detection design achieves a high level of performance not normally available with mechanical detection.

Specifications

Voltage	15 to 32 VDC (filtered DC with 30% maximum ripple)
Standby Current	80 μA typical, 100 μA maximum
Alarm Current, 2-Wire Operation	Up to 86 mA maximum, exact current is determined by alarm current limiting of connected IDC
Alarm Current, 4-Wire Operation	24 mA typical @ 24 VDC
Rate-of-Rise Operation	Meets FM requirements for operation between 15° and 25° F/min (8.33° and 13.88° C/min)
Humidity Range	10% to 95% RH from 32° to 122° F (0° to 50° C), not intended for outdoor applications
Storage Temperature	0° to 140° F (-18° C to 60° C)
Color	Frost-White
Dimensions	Refer to diagram on page 3
Ambient Temperature Operating Range	
135° F Models	32° to 100° F (0° to 38° C)
200° F Models	32° to 150° F (0° to 66° C)

**** WARNING: In most fires, hazardous levels of smoke and toxic gas can build up before a heat detection device would initiate an alarm. In cases where Life Safety is a factor, the use of smoke detection is highly recommended.**

RSN: *1167880*
Permit #: *2016-1214781-LT*

Applications Reference

Heat detectors are used where property protection is desired and where life safety protection is not required or is performed by other equipment. Typical heat detector applications are satisfied by use of these fixed temperature electronic detectors.

The addition of rate-of-rise operation provides two forms of heat detection for use where temperature fluctuations are controlled and are less than 6° F/min (3.33° C/min). Where temperatures may fluctuate more quickly, use fixed temperature detection.

Refer to NFPA 72, the *National Fire Alarm Code* and publication 574-709, *4098 Detectors, Sensors, and Bases Application Manual*, for additional guidance in applying and locating heat detectors.

Alarm Indicating LED Operation

The heat detector LED turns ON continuously when in alarm. During normal conditions the LED is OFF.

Fixed Temperature Guidelines

135° F (57° C) fixed temperature detectors are for normal temperatures that do not exceed 100° F (38° C).

200° F (93° C) fixed temperature detectors are for normal temperatures that exceed 100° F (38° C) but are less than 150° F (66° C).

Alarm Verification Application Note

When connecting these electronic heat detectors to a 2-wire initiating device circuit (IDC) that is providing Alarm Verification for smoke detectors, use the 4098-9682, 4-wire base. The 4-wire base provides an alarm contact that is not current-limited. (Heat detectors in the 2-wire base present a current-limited alarm condition that is not compatible with Alarm Verification. Initiating devices other than smoke detectors are required to activate the alarm without starting the alarm verification cycle.)

Heat Detector Selection Chart (compatible with bases listed below)

Model	Fixed Temperature Operation at	Rate-of-Rise Operation	FM Ratings		UL & ULC Maximum Spacing
			Maximum Spacing	RTI (Response Time Index)	
4098-9612	135° F (57° C)	Not applicable	20 ft x 20 ft (6.1 m x 6.1 m)	Quick	70 ft x 70 ft (21.3 m x 21.3 m)
4098-9614	200° F (93° C)				
4098-9613	135° F (57° C)	Between 15° & 25° F/min (8.33° & 13.88° C/min)	20 ft x 20 ft (6.1 m x 6.1 m)	Quick	
4098-9615	200° F (93° C)		50 ft x 50 ft (15.2 m x 15..2 m)	Ultra Fast	

Heat Detector Base Selection Chart

Model	Description	Connection	Details	
4098-9788	**2-Wire Base,** no options	IDC connections	Screw terminals for in/out wiring, 18 to 14 AWG	
4098-9684	**2-Wire Base** with connection for remote LED alarm indicator	IDC connections	Screw terminals for 18 to 14 AWG for in/out wiring of zone (+), color coded 18 AWG leads for in/out wiring of zone (–)	
		LED connections	Color coded 18 AWG leads	
4098-9683	**2-Wire Base** with auxiliary alarm relay output **NOTE:** Must be connected as the only device on the IDC to ensure relay operation.	**Relay Operation Type**	**Relay Ratings**	
		Power-limited	1 A @ 28 VDC	Dual Form "C" contacts, for suppressed loads
		Nonpower-limited	3 A @ 120 AC	
		Output Type	**Wiring Connections**	
		IDC connections	Screw terminals for 18 to 14 AWG for in/out wiring of zone (+), color coded 18 AWG leads for in/out wiring of zone (–)	
		Relay connections	Color coded 18 AWG leads	
4098-9682	**4-Wire Base** with auxiliary alarm relay output **NOTE:** Requires separate 24 VDC power.	**Relay Operation Type**	**Relay Ratings**	
		Power-limited	3 A @ 28 VDC	Single Form "C" contacts, for suppressed loads
		Nonpower limited	3 A @ 120 AC	
		Output Type	**Wiring Connections**	
		IDC connections	Color coded 18 AWG leads for in/out wiring	
		Relay connections	Color coded 18 AWG leads	
		Power connections	Screw terminals for 18 to 14 AWG for in/out wiring of power (+), color coded 18 AWG leads for in/out wiring of power (–)	

Metric wire equivalents: 18 AWG = 0.82 mm^2; 14 AWG = 2.08 mm^2

RSN: *1167880*
Permit #: *2016-1214781-LT*

Heat Detector Accessories

Model	Description	Details	Base Compatibility
4098-9832	Adapter Plate	**Required for** surface or semi-flush mounting to 4” (102 mm) square electrical box or for surface mounting to 4” octagonal box	4098-9682 4098-9683 4098-9684 4098-9788
		May also be used when retrofitting to replace existing larger diameter bases	
4098-9830	Remote Red LED Alarm Indicator	Mounted on single gang stainless steel plate, wiring connections are 18 AWG color coded leads	4098-9684 only
2098-9739	End-of-Line Relay	Epoxy encapsulated design, 24 VDC operation, wiring connections are 18 AWG color coded leads	For 4-wire IDCs using 4098-9682 base, one per circuit
2098-9735	End-of-Line Relay	Mounted on single gang stainless steel plate, 24 VDC operation, wiring connections are 18 AWG color coded leads	

Metric wire equivalent: 18 AWG = 0.82 mm^2

Dimensions and Reference

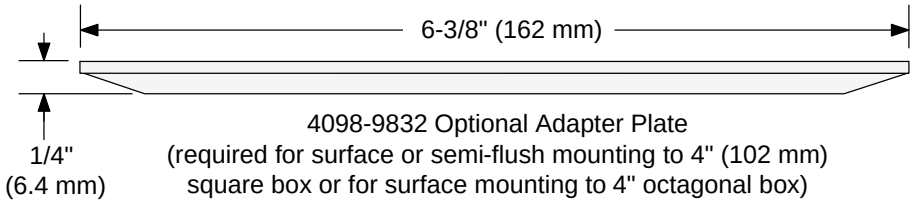

4098-9832 Optional Adapter Plate
(required for surface or semi-flush mounting to 4" (102 mm) square box or for surface mounting to 4" octagonal box)

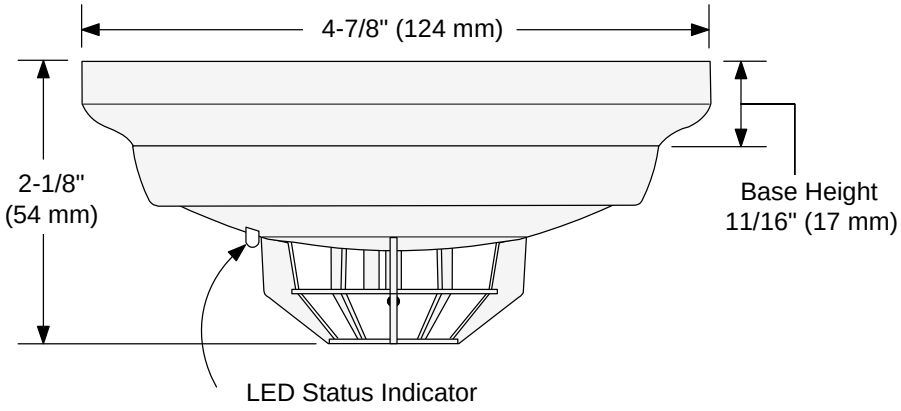

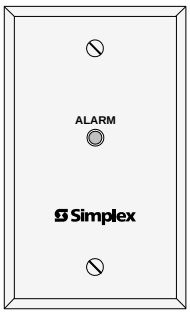

4098-9830 Remote Red LED Alarm Indicator (not to scale)

RSN: ***1167880***
Permit #: ***2016-1214781-LT***

Mounting Information

Base	Electrical Box Requirements
4098-9788	4” (102 mm) octagonal or 4” square box, 1-1/2” deep (38 mm)
	Single gang box, 2” deep (51 mm)
4098-9682 4098-9683 4098-9684	4” octagonal or 4” square box, 1-1/2” deep with 1-1/2” deep extension ring (see diagram below)

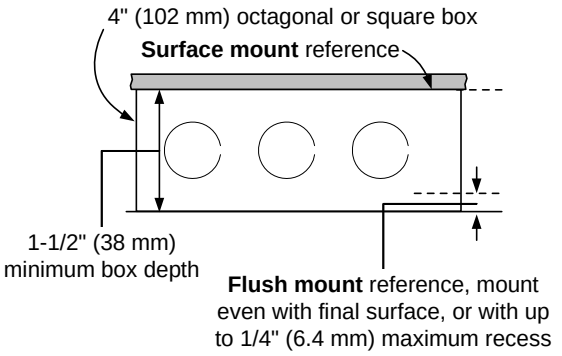

4098-9832 Adapter Plate, required for surface or semi-flush mounting to 4" square box or for surface mounting to 4" octagonal box

Bases 4098-9682 and 4098-9683 include a relay that mounts in base electrical box

Base 4098-9684 includes a remote LED interface module that mounts in base electrical box

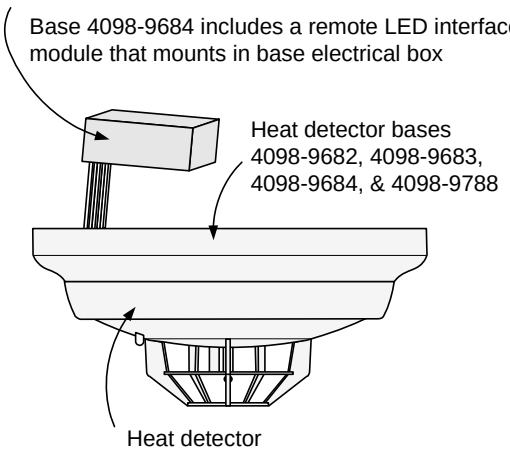

NOTE: Refer to Installation Instructions 574-706 for additional information.

Applications Reference

The following table provides a reference for the maximum rectangular area covered for detectors rated with the given spacing. For additional information, including consideration of ceiling height, refer to NFPA 72, the *National Fire Alarm Code*.

Maximum Rectangular Area Dimensions for Single Detector Coverage

20 ft Rated Spacing (6.1 m)	50 ft Rated Spacing (15.2 m)	70 ft Rated Spacing (21.3 m)
20 ft x 20 ft (6.1 m x 6.1 m)	50 ft x 50 ft (15.2 m x 15.2 m)	70 ft x 70 ft (21.3 m x 21.3 m)
15 ft x 23.9 ft (4.5 m x 7.2 m)	45 ft x 54.5 ft (13.7 m x 16.6 m)	65 ft x 74.6 ft (19.8 m x 22.7 m)
10 ft x 26.4 ft (3 m x 8 m)	40 ft x 58.2 ft (12.1 m x 17.7 m)	60 ft x 78.7 ft (18.3 m x 24 m)
5 ft x 27.8 ft (1.5 m x 8.4 m)	35 ft x 61.4 ft (10.6 m x 18.7 m)	55 ft x 82.3 ft (16.7 m x 25 m)
1 ft x 28.2 ft (0.3 m x 8.5 m)	30 ft x 64 ft (9.1 m x 19.5 m)	50 ft x 85.4 ft (15.2 m x 26 m)
	25 ft x 66.1 ft (7.6 m x 20.1 m)	45 ft x 88.1 ft (13.7 m x 26.8 m)
	20 ft x 67.8 ft (6.1 m x 20.6 m)	40 ft x 90.5 ft (12.2 m x 27.5 m)
	15 ft x 69 ft (4.5 m x 21 m)	35 ft x 92.6 ft (10.6 m x 28.2 m)
	10 ft x 69.9 ft (3.5 m x 21.3 m)	30 ft x 94.3 ft (9.1 m x 28.7 m)
	5 ft x 70.5 ft (1.5 m x 21.4 m)	25 ft x 95.7 ft (7.6 m x 29.1 m)
	1 ft x 70.6 ft (0.3 m x 21.5 m)	20 ft x 96.9 ft (6.1 m x 29.5 m)
		15 ft x 97.8 ft (4.5 m x 29.8 m)
		10 ft x 98.4 ft (3.05 m x 30 m)
		5 ft x 98.8 ft (1.5 m x 30.1 m)
		1 ft x 99 ft (0.3 m x 30.2 m)

TYCO, SIMPLEX, and the product names listed in this material are marks and/or registered marks. Unauthorized use is strictly prohibited. NFPA 72 and National Fire Alarm and Signaling Code are registered trademarks of the National Fire Protection Association (NFPA).

© 2015 Tyco Fire Protection Products. All rights reserved. All specifications and other information shown were current as of document revision date and are subject to change without notice.

RSN: *1167880*
Permit #: *2016-1214781-LT*

Multi-Application Peripherals

*UL, ULC, CSFM Listed; FM Approved; MEA (NYC) Acceptance**

IDNet and MAPNET II Communicating Devices, Individual Addressable Modules (IAMs)

Features

IDNet or MAPNET II addressable communications supply both data and power over a single wire pair to provide:**

- Supervised Class B monitoring of normally open, dry contacts
- Total wiring distance from IAM to supervision resistor(s) of up to 500 ft (152 m)
- Monitored connection is compatible with Simplex® 2081-9044 Overvoltage Protectors for outdoor wiring or electrically noisy applications
- For use in indoor locations up to 158° F (70° C) such as attic spaces or similar applications

For use with following Simplex control panels:

- Model Series 4007ES, 4008, 4010, 4010ES, and 4100ES fire alarm control panels for IDNet communications
- Model Series 4100/4100U/4100ES, 4120, 4020, and 2120 Communicating Device Transponders (CDTs) equipped with MAPNET II communications

Model 4090-9001:

- Enclosed design minimizes dust infiltration
- Mounts in standard single gang electrical box
- Screw terminals for wiring connections
- Visible LED flashes to indicate communications
- Optional covers are available to allow LED to be viewed after installation (requires mounting bracket, ordered separately)

Model 4090-9051:

- Encapsulated design for extended exposure to high humidity (LED is not present on this model)
- Color coded 18 AWG leads for wiring

IDNet communications provides current limited monitoring:

- Provides monitoring of tamper switch (supervisory) and waterflow switch (alarm) on same circuit using one point
- Available with IDNet communications only

Multiple operation modes are available and are selectable at the control panel:

- Contact closure status can be tracked
- Momentary contact closure conditions can be selected at the panel to be latched or tracked (not available with the 2120 CDT)

UL listed to Standard 864

* These products have been approved by the California State Fire Marshal (CSFM) pursuant to Section 13144.1 of the California Health and Safety Code. See CSFM Listing 7300-0026:223 for allowable values and/or conditions concerning material presented in this document. Accepted for use – City of New York Department of Buildings – MEA35-93E. Additional listings may be applicable; contact your local Simplex product supplier for the latest status. Listings and approvals under Simplex Time Recorder Co. are the property of Tyco Fire Protection Products .

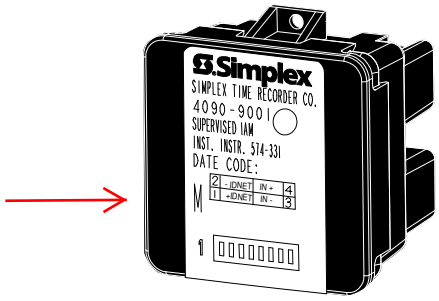

4090-9001 Supervised IAM
(shown approximately 3/4 size)

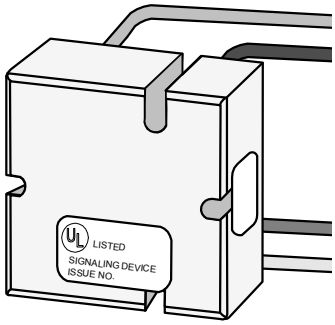

4090-9051 Supervised IAM
(shown approximately 3/4 size)

Description

Individual addressable modules (IAMs) receive both power and communications from a two-wire MAPNET II or IDNet circuit. They provide location specific addressability to a single initiating device (such as single station smoke detector alarm contacts or heat detector contacts) or multiple devices at the same location by monitoring normally open dry contacts and the wiring to an end-of-line resistor.

Model 4090-9001 is packaged in a thermoplastic housing and provides screw terminal connections and a status indicating LED.

Model 4090-9051 is an encapsulated package with wire leads. It does not provide a status indicating LED.

RSN: *1167880*
Permit #: *2016-1214781-LT*

Operation

Contact Closure. Closure of the monitored contact(s) initiates an alarm or other response as programmed at the fire alarm control panel. An open in the monitored circuit wiring will cause a trouble to be reported.

Panel Selections. Selections can be made at the control panel to maintain the alarm condition if the initiating device contacts are momentary, such as from a rate-of-rise heat detector, or to track the device contact status (not available with the 2120 CDT).

Current Limited Operation Applications

For use with IDNet communications only, these IAMs can provide quad-state sensing of normal, open circuit, short circuit, and current limited conditions. (Program type is "T-sense.") With the proper end-of-line and current limiting resistors, dual functions such as tamper switch and waterflow switch monitoring can be determined and communicated by a single addressable point.

IAM Product Selection

Model	Description
4090-9001	Supervised IAM, mounted in thermoplastic housing with screw terminals; see applicable options below
4090-9051	Supervised IAM, encapsulated with wire leads

Optional Trim Plates and Mounting Bracket for Model 4090-9001

Model	Description
4090-9806	For semi-flush mounted box — Trim plate with LED viewing window, requires 4090-9810 mounting bracket, includes mounting screws; galvanized steel
4090-9807	For surface mounted box
4090-9810	Mounting bracket, mounts IAM to electrical box and provides screw holes for trim plate, **required for optional trim plates**

End-of-Line Resistor Harnesses (ordered separately as required)

Model	Reference No.	Description
4081-9004	733-886	6.8 kΩ, 1/2 W; Standard end-of-line resistor harness for N.O. contact supervision
4081-9003	733-896	4.7 kΩ, 1/2 W — Use for current limited monitoring applications
4081-9005	733-984	1.8 kΩ, 1/2 W

Specifications

Electrical

Power and Communications		MAPNET II or IDNet, auto selected, 1 address per IAM
Input Requirements		Normally open, dry contacts
Wire Connections	4090-9001	Screw terminals for in/out wiring, 18 to 14 AWG wire (0.82 mm^2 to 2.08 mm^2)
	4090-9051	Color coded wire leads, 18 AWG (0.82 mm^2), 8" long (203 mm)
Reference Documents	Installation Instructions	574-331 for 4090-9001; 579-572 for 4090-9051
	Field Wiring Diagrams	842-073 for IDNet operation; 841-804 for MAPNET II operation

Wiring Distances

Distance from IAM to Contacts	500 ft (152 m) maximum without protectors
	400 ft (122 m) maximum with 2081-9044 Overvoltage Protectors
Wiring Distance Reference per channel, MAPNET II or IDNet Communications	2500 ft (762 m) maximum from fire alarm control panel
	10,000 ft (3048 m) maximum total wiring distance (including T-Taps)

Mechanical

Dimensions	4090-9001	1-9/16" W x 1-3/4" H x 1-1/4" D (40 mm x 44 mm x 32 mm)
	4090-9051	1-9/16" W x 1-9/16" H x 9/16" D (40 mm x 40 mm x 14 mm)
Housing Material, 4090-9001		Black thermoplastic
Encapsulation Material, 4090-9051		Epoxy, beige
Temperature Range		32° to 158° F (0° to 70° C); intended for indoor operation
Humidity Range		Up to 93% RH at 100° F (38° C)

RSN: ***1167880***
Permit #: ***2016-1214781-LT***

Mounting Information

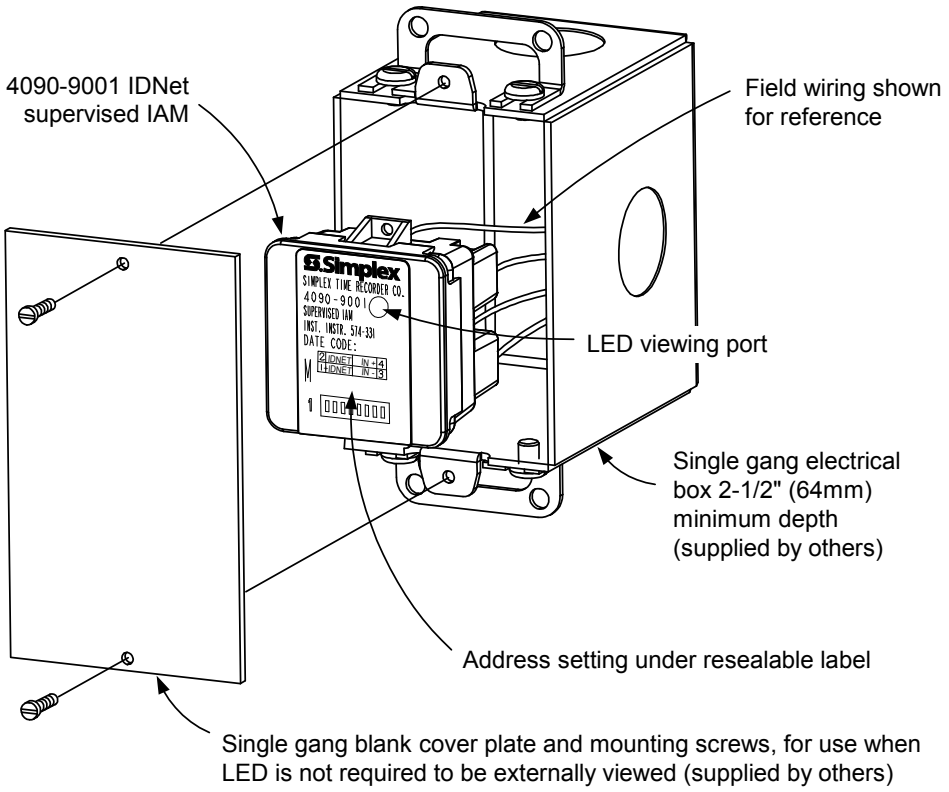

Mounting Reference, Single Gang Blank Cover Plate

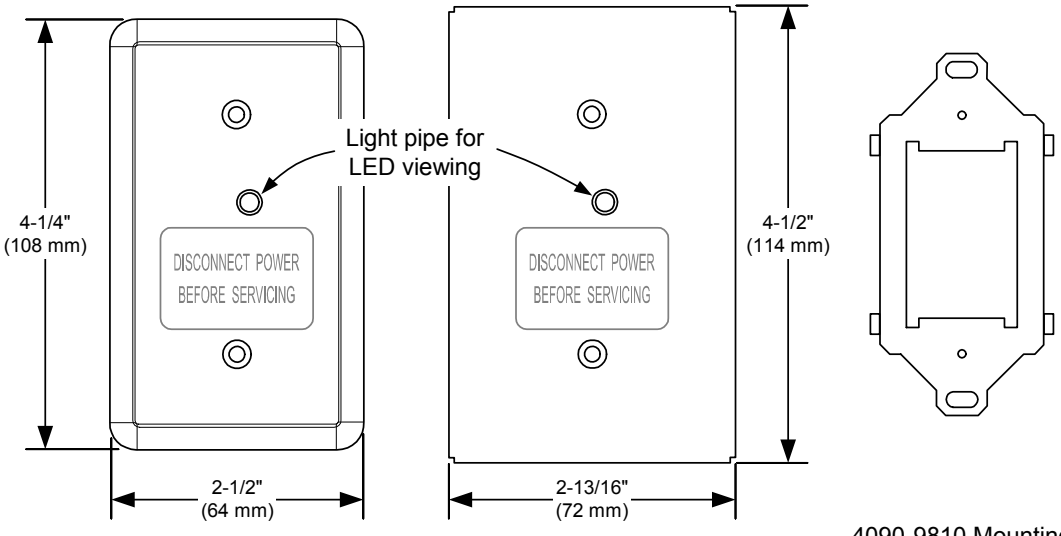

4090-9806, Trim plate for semi-flush mounted box

4090-9807, Trim plate for surface mounted box

4090-9810 Mounting bracket, ordered separately

NOTE: These mounting plates require mounting bracket 4090-9810.

Optional Trim Plates and Mounting Bracket for Visible LED

4090-9051 Mounting Information

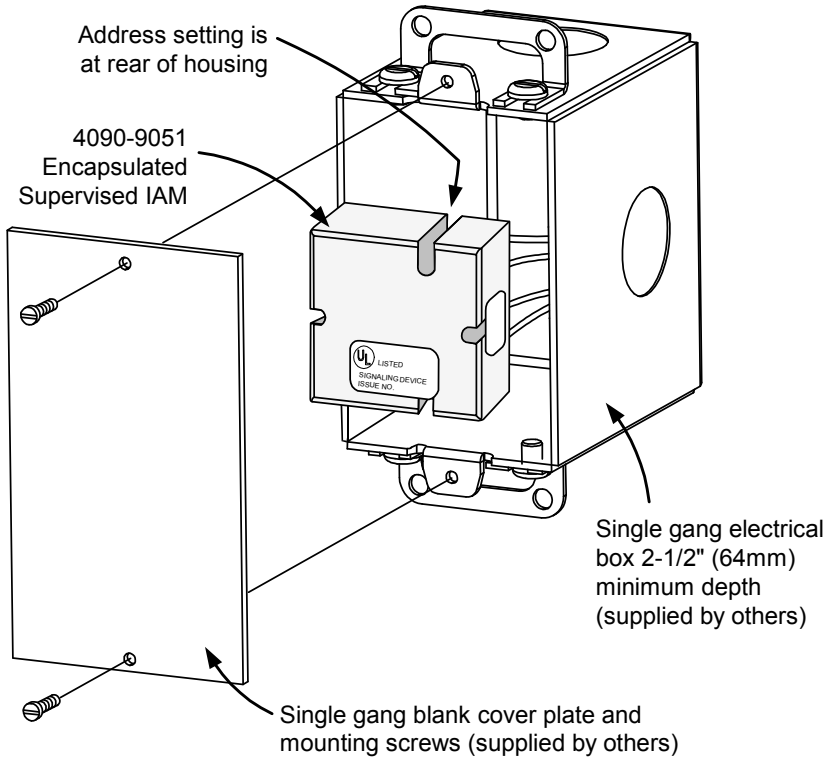

© 2016 Tyco Fire Protection Products. All rights reserved. All specifications and other information shown were current as of document revision date and are subject to change without notice.

RSN: *1167880*
Permit #: *2016-1214781-LT*

Simplex®

Multi-Application Peripherals

UL, ULC, CSFM Listed;
*FM Approved **

IDNet or MAPNET II Communicating Devices
Addressable Manual Stations

Features

Individually addressable manual fire alarm stations with:

- Power and data supplied via IDNet or MAPNET II addressable communications using a single wire pair
- Operation that complies with ADA requirements
- Visible LED indicator that flashes during communications and is on steady when the station has been activated
- The NO GRIP Single Action Station and Retrofit Kit are available with a more easily operated pull lever for applications where anticipated users may find the standard station lever difficult to activate
- Pull lever that protrudes when alarmed
- Break-rod supplied (use is optional)
- Models are available with single or double action (breakglass or push) operation
- UL listed to Standard 38

Compatible with the following Simplex® control panels:

- Model Series 4007ES, 4008, 4010, 4010ES, 4100ES, 4100U, 4020, 4100, and 4120 fire alarm control panels equipped with either IDNet or MAPNET II communications
- Model Series 2120 Communicating Device Transponders (CDTs) equipped with MAPNET II communications

Compact construction:

- Electronics module enclosure minimizes dust infiltration
- Allows mounting in standard electrical boxes
- Screw terminals for wiring connections

Tamper resistant reset key lock (keyed same as Simplex fire alarm cabinets)

Multiple mounting options:

- Surface or semi-flush with standard boxes or matching Simplex boxes
- Flush mount adapter kit
- Adapters are available for retrofitting to commonly available existing boxes

Description

The Simplex addressable manual station combines the familiar Simplex manual station housing with a compact communication module that is easily installed to satisfy demanding applications. Its integral individual addressable module (IAM) constantly monitors status and communicates changes to the connected control panel via IDNet or MAPNET II communications wiring.

* Refer to page 2 for specific model listings. This product has been approved by the California State Fire Marshal (CSFM) pursuant to Section 13144.1 of the California Health and Safety Code. See CSFM Listing 7150-0026:224 for allowable values and/or conditions concerning material presented in this document. Additional listings may be applicable; contact your local Simplex product supplier for the latest status. Listings and approvals under Simplex Time Recorder Co. are the property of Tyco Fire Protection Products.

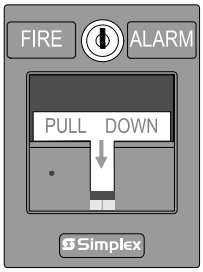

4099-9004
Single action

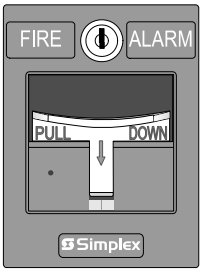

4099-9021
NO GRIP
Single action

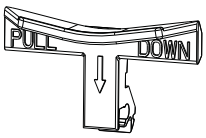

4099-9805
NO GRIP
Retrofit kit

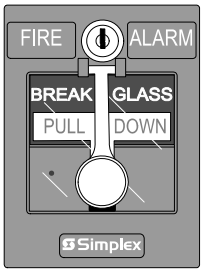

4099-9005
Breakglass

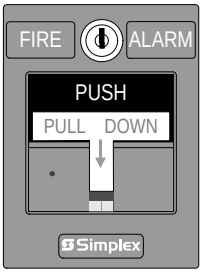

4099-9006
Push

With 2099-9828
Institutional
Cover kit

Operation

Activation of the 4099-9004 single action manual station requires a firm downward pull to activate the alarm switch. Completing the action breaks an internal plastic break-rod (visible below the pull lever, use is optional). The use of a break-rod can be a deterrent to vandalism without interfering with the minimum pull requirements needed for easy activation. The pull lever latches into the alarm position and remains extended out of the housing to provide a visible indication.

Single Action NO GRIP Station 4099-9021. For applications such as California Building Code, Title 24, which requires "Controls and operating mechanisms shall be operable with one hand and shall not require tight grasping, pinching or twisting of the wrist" the model 4099-9021 station provides a more easily operated pull lever compared to standard stations. Retrofit of existing stations is available using the 4099-9805 Retrofit kit.

Double Action Stations (Breakglass) require the operator to strike the front mounted hammer to break the glass and expose the recessed pull lever. The pull lever then operates as a single action station.

Double Action Stations (Push Type) require that a spring loaded interference plate (marked PUSH) be pushed back to access the pull lever of the single action station.

Station reset requires the use of a key to reset the manual station lever and deactivate the alarm switch. (If the break-rod is used, it must be replaced.)

Station testing is performed by physical activation of the pull lever. Electrical testing can be also performed by unlocking the station housing to activate the alarm switch.

RSN: ***1167880***
Permit #: ***2016-1214781-LT***

Addressable Manual Station Product Selection

Addressable Manual Stations, Red Housing with White Letters and White Pull Lever

Model	Description	Housing	Pull Lever	Listings
4099-9004	Single Action, English	FIRE ALARM	PULL DOWN	UL, ULC, FM, CSFM
4099-9004CB	Single Action, Bilingual English and French	FEU FIRE	TIREZ PULL	ULC
4099-9004CF	Single Action, French	ALARME FEU	ABAISSEZ	
4099-9004PO	Single Action, Portuguese	FOGO ALARME	PUXE	UL, FM
4099-9004SP	Single Action, Spanish	ALARMA FUEGO	JALE	
4099-9005	Double Action, Breakglass operation, English	FIRE ALARM	PULL DOWN	UL, ULC, FM, CSFM
4099-9005PO	Double Action, Breakglass operation, Portuguese	FOGO ALARME	PUXE	UL, FM
4099-9005SP	Double Action, Breakglass operation, Spanish	ALARMA FUEGO	JALE	
4099-9006	Double Action, Push operation, English	FIRE ALARM	PUSH PULL DOWN	UL, ULC, FM, CSFM
4099-9006PO	Double Action, Push operation, Portuguese	FOGO ALARME	EMPURRE PUXE	UL, FM
4099-9006SP	Double Action, Push operation, Spanish	ALARMA FUEGO	EMPUJE JALE	
4099-9021	Single Action NO GRIP operation, English	FIRE ALARM	PULL DOWN	UL, ULC, FM, CSFM

Accessories (refer to pages 3 and 4 for details)

Model	Description	Model	Description
2975-9022	Cast aluminum surface mount box, red	2099-9803	Replacement breakglass
2975-9178	Surface mount steel box, red	2099-9804	Replacement break-rod
2099-9813	Semi-flush trim plate for double gang switch box, red	2099-9828	Institutional cover kit for field installation on 4099-9004; Note: Covers LED indicator
2099-9819	Flush mount adapter kit, black	2099-9814	Surface trim plate for Wiremold box V5744-2, red
2099-9820	Flush mount adapter kit, beige		
4099-9805	Retrofit Kit for field conversion of a single action station to a NO GRIP station; refer to Installation Instructions 579-1007 for details		

Specifications (refer to Installation Instructions 579-1135 for additional information)

Power and Communications	IDNet or MAPNET II communications, 1 address per station
Address Means	DIP switch, 8 position
Wire Connections	Screw terminal for in/out wiring, for 18 to 14 AWG wire (0.82 mm^2 to 2.08 mm^2)
UL Listed Temperature Range	32° to 120° F (0° to 49° C) intended for indoor operation
Humidity Range	Up to 93% RH at 100° F (38° F)
Housing Color	Red with white raised lettering
Material	Housing and pull lever are Lexan polycarbonate or equal
Pull Lever Color	White with red raised lettering
Housing Dimensions	5" H x 3 ¾" W x 1" D (127 mm x 95 mm x 25 mm)

Addressable Manual Station Semi-Flush Mounting

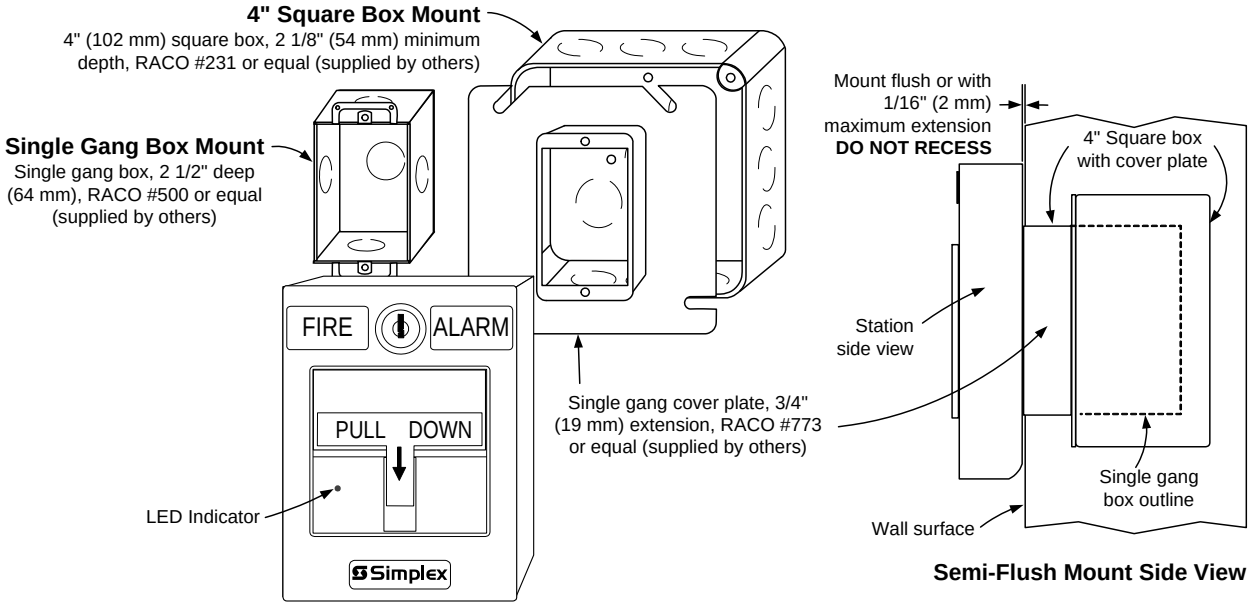

Semi-Flush Mount Side View

Addressable Manual Stations Surface Mounting

Preferred Mounting. For surface mounting of these addressable manual stations, the preferred electrical boxes are shown in the illustration to the right.

Additional Mounting Reference. Refer to page 4 for Wiremold box mounting compatibility.

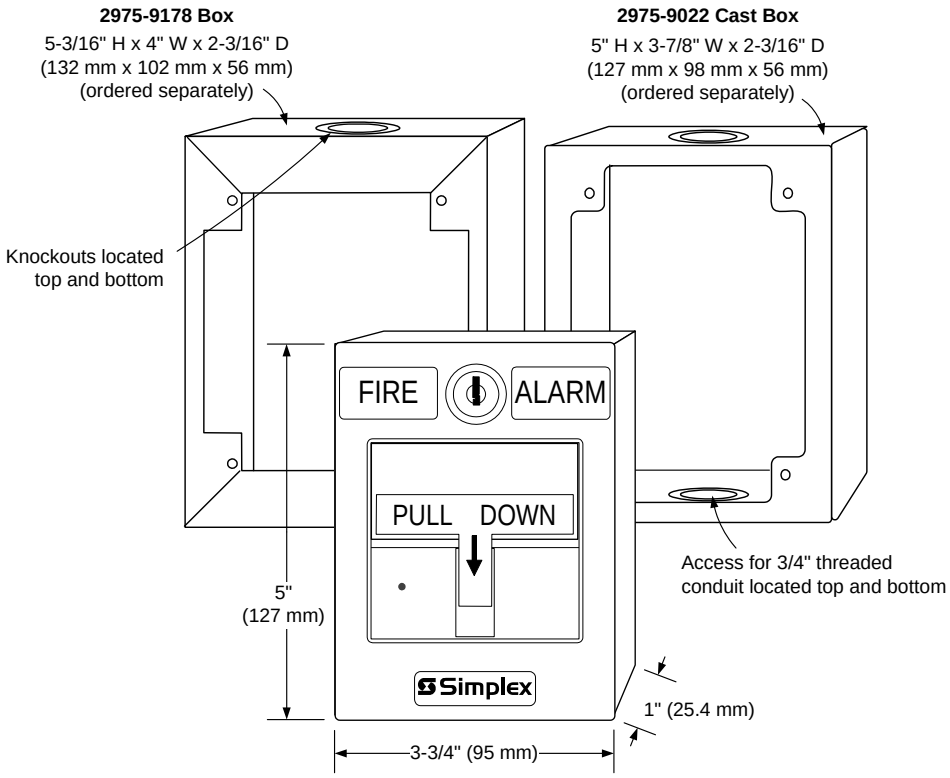

4099 Series Addressable Manual Station

Surface Mount Side View with Internal Detail

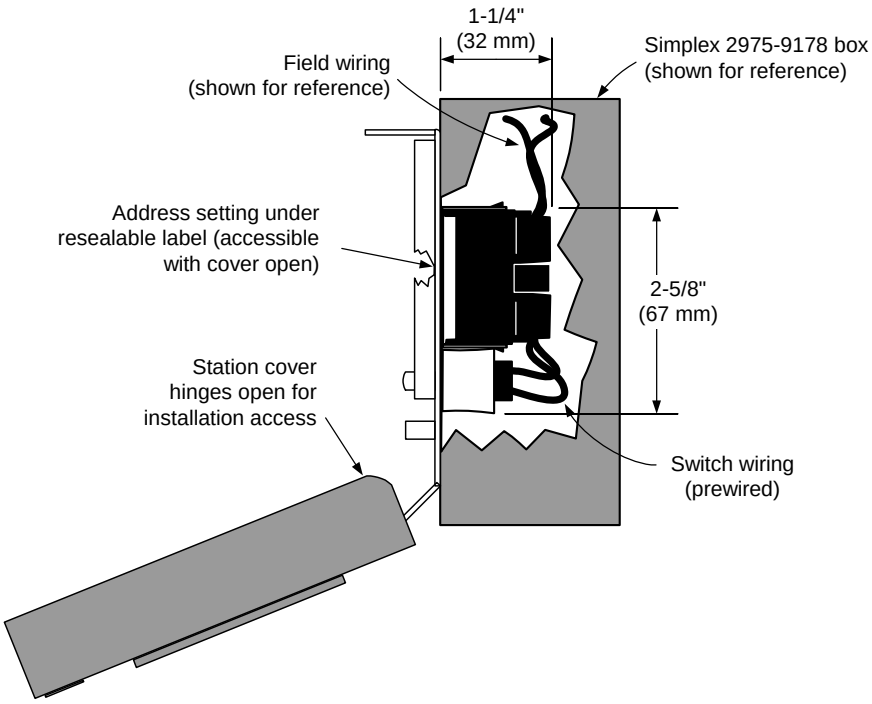

Application Reference

Refer to NFPA 72, the *National Fire Alarm and Signaling Code*, and all applicable local codes for complete requirements for manual stations. The following summarizes the basic requirements.

1. Stations shall be located in the normal path of exit and distributed in the protected area such that they are unobstructed and readily accessible.
2. Mounting shall be with the operable part not less than 42 in (1.07 m) and not more than 48 in (1.22 m) above floor level.
3. At least one station shall be provided on each floor. Additional stations shall be provided to obtain a travel distance not more than 200 ft (61 m) to the nearest station from any point in the building.
4. When manual station coverage appears limited in any way, additional stations should be installed.

RSN: ***1167880***
Permit #: ***2016-1214781-LT***

Addressable Manual Station, Additional Mounting Information

For retrofit and new installations, additional compatible mounting boxes and the required adapter plates are shown in the illustration to the right.

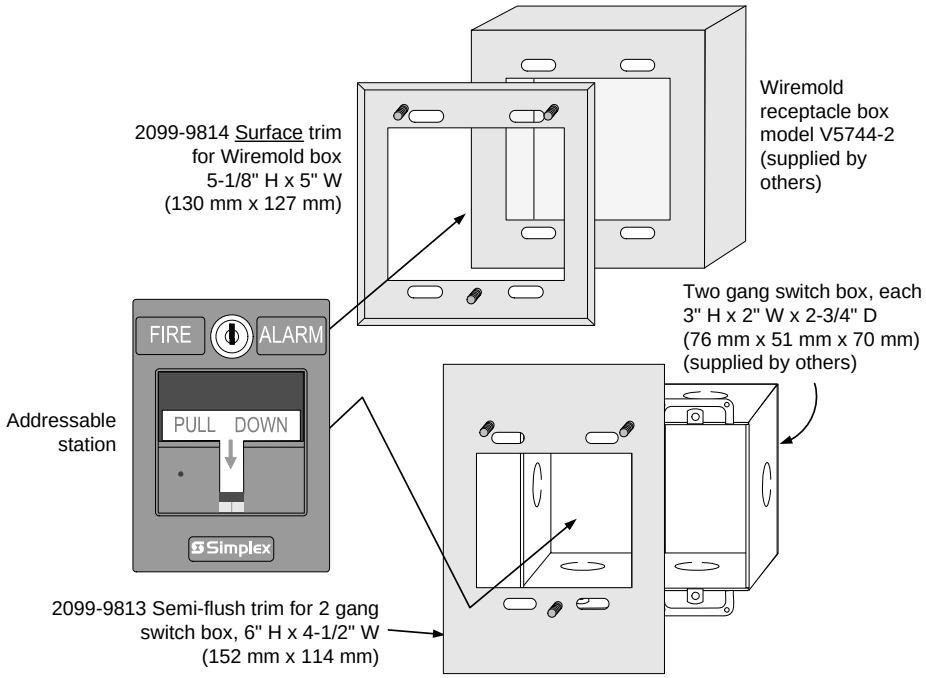

Addressable Manual Station, Flush Mounting Information

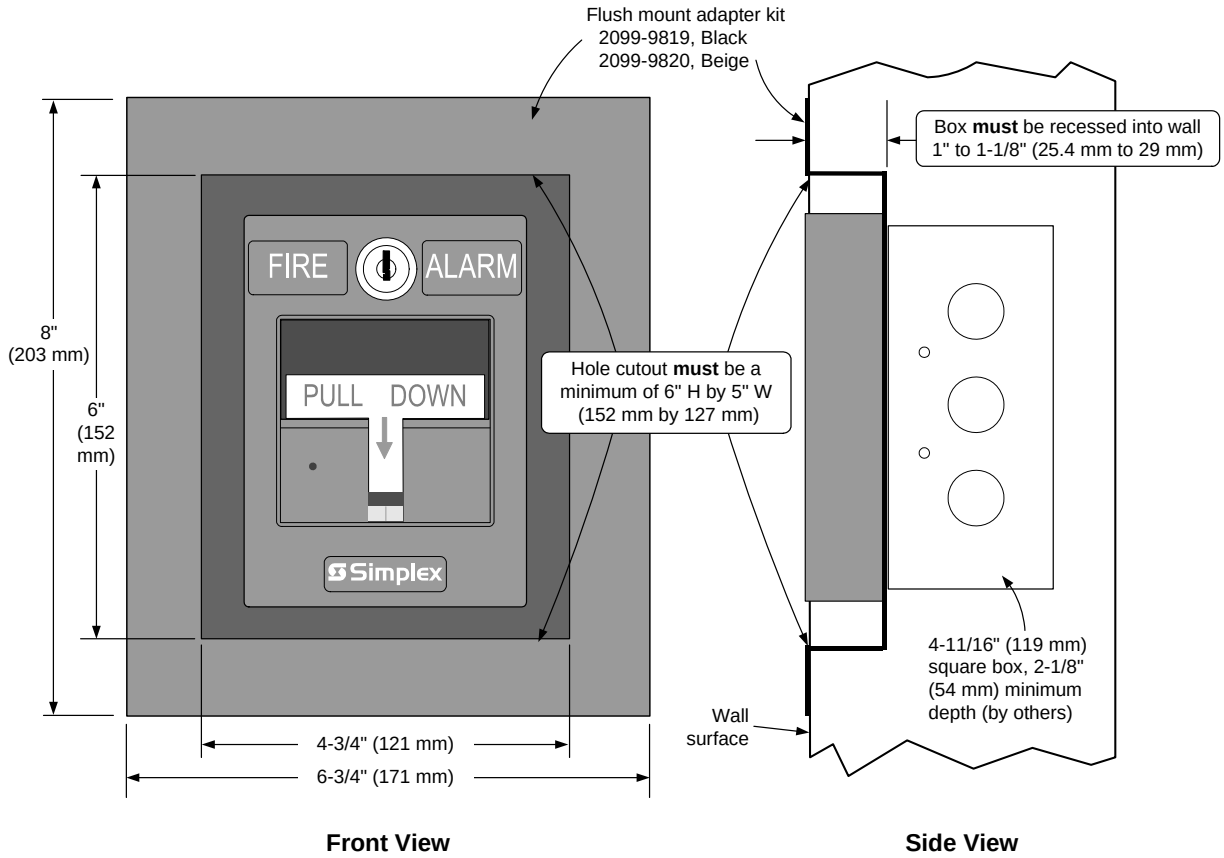

TYCO, SIMPLEX, and the product names listed in this material are marks and/or registered marks. Unauthorized use is strictly prohibited. NFPA 72 and National Fire Alarm and Signaling Code are trademarks of the National Fire Protection Association (NFPA). Lexan is a trademark of the General Electric Co. Wiremold is a trademark of the Wiremold Company.

© 2014 Tyco Fire Protection Products. All rights reserved. All specifications and other information shown were current as of document revision date and are subject to change without notice.

RSN: *1167880*
Permit #: *2016-1214781-LT*

Simplex®

Multi-Application Peripherals

UL, ULC, CSFM Listed; FM Approved;
*MEA (NYC) Acceptance**

IDNet Communicating Devices
Model 4090-9002 Relay IAM

Features

Individual Addressable Relay Module (Relay IAM):

- IDNet addressable control for use with Simplex® fire alarm control panel models 4007ES, 4008, 4010, 4010ES, 4100ES, and 4100U
- A single addressable point provides control and status tracking of a Form "C" contact
- Low power latching relay design allows IDNet communications to supply both data and module power
- Relay is set to OFF on initial power up and upon loss of IDNet communications

Compact, sealed construction:

- Enclosed design minimizes dust infiltration
- Mounts in standard 4" (102 mm) square electrical box, optional adapter bracket is available to mount in a 4 $^{11}/_{16}$" (119 mm) square electrical box
- Screw terminals for wiring connections
- Visible LED flashes to indicate communications
- Optional covers are available to allow LED to be viewed after installation

UL listed to Standard 864

Description

IDNet Relay IAMs allow fire alarm control panels to control a remotely located Form "C" contact using IDNet addressable communications for both data and module power. Typical applications would be for switching local power for control functions such as elevator capture, or control of HVAC components, pressurization fans, dampers, etc. Relay status is also communicated requiring only one device address.

Product Selection

Model	Description
4090-9002	Relay IAM

Optional Adapter and Trim Plates

Model	Description	
4090-9813	Adapter plate to fit 4 $^{11}/_{16}$" (119 mm) square electrical box	
4090-9801	For semi-flush mounted box	Trim Plate, galvanized steel, with LED viewing window; includes mounting screws
4090-9802	For surface mounted box	

* This product has been approved by the California State Fire Marshal (CSFM) pursuant to Section 13144.1 of the California Health and Safety Code. See CSFM Listing 7300-0026:223 for allowable values and/or conditions concerning material presented in this document. Accepted for use – City of New York Department of Buildings – MEA35-93E. Additional listings may be applicable; contact your local Simplex product supplier for the latest status. Listings and approvals under Simplex Time Recorder Co. are the property of Tyco Fire Protection Products.

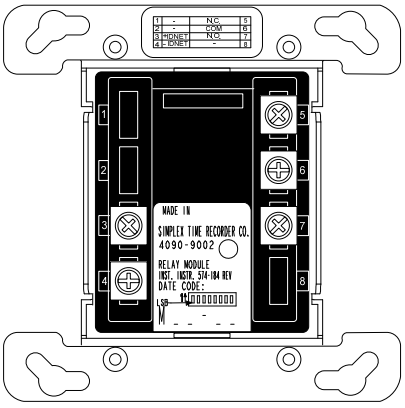

4090-9002 IDNet Relay IAM Package
(shown approximately 1/2 size)

Specifications

Communications	IDNet communications, 1 address per device	
Relay IAM Power	Supplied by IDNet communications	
Contact Ratings* (not rated for incandescent switching)		
Type	Form C, SPDT	
Power-Limited	2 A @ 24 VDC, resistive	from listed fire alarm supply
	1 A @ 24 VDC, inductive	
Nonpower-Limited	0.5 A @ 120 VAC, resistive	
* Provide circuit fusing and transient suppression as required per application. DC inductive loads can typically be diode suppressed; 120 VAC loads may require RC networks or varistors, depending on device type. Refer to the installation instructions for additional information.		
Wire Connections	Screw terminals for in/out wiring, 18 to 14 AWG wire (0.82 to 2.08 mm^2)	
IDNet Communications Wiring Reference	Up to 2500 ft (762 m) from control panel	
	Up to 10,000 ft (3048 m) total wiring distance (including T-Taps)	
	Compatible with Simplex 2081-9044 Overvoltage Protectors	
Dimensions	4 ⅛" H x 4 ⅛" W x 1 ⅜" D (105 mm x 105 mm x 35 mm)	
Housing Material	Black thermoplastic	
Mounting Plate	Sheet metal, galvanized	
Temperature Range	32° to 120° F (0° to 49° C), intended for indoor operation	
Humidity Range	Up to 93% RH at 100° F (38° C)	
Installation Instructions	574-184	

RSN: ***1167880***
Permit #: ***2016-1214781-LT***

Relay IAM Mounting Information

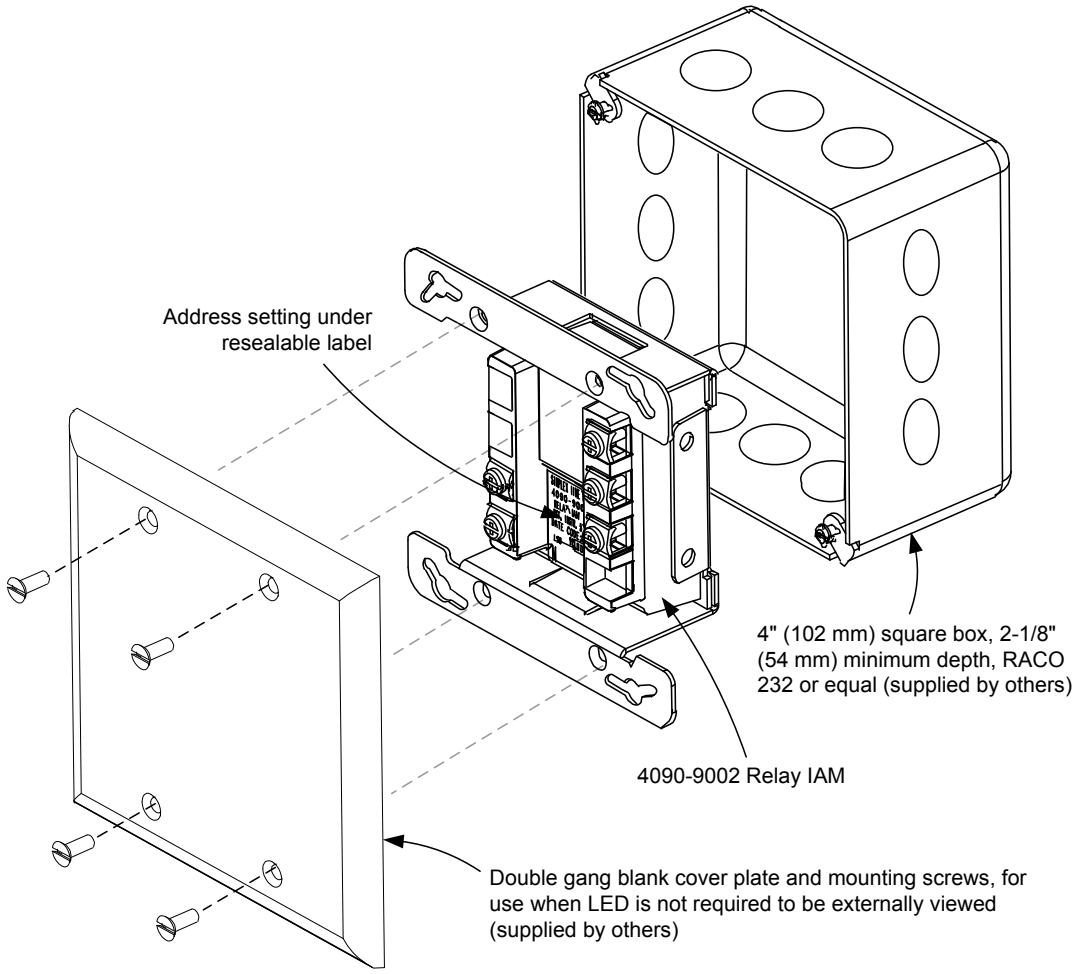

Mounting Reference, Double Gang Blank Cover Plate

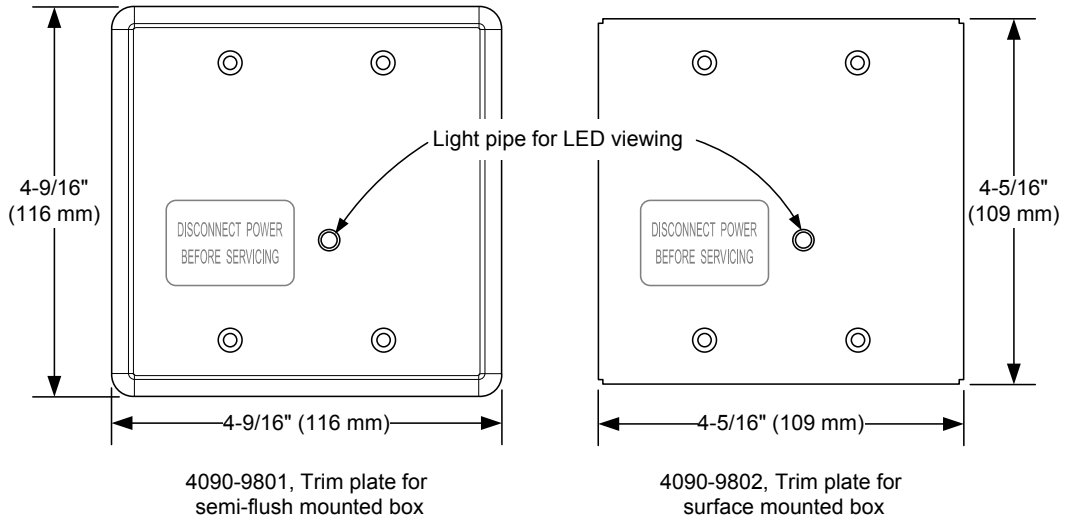

Optional Trim Plates for Visible LED

TYCO, SIMPLEX, and the product names listed in this material are marks and/or registered marks. Unauthorized use is strictly prohibited.

© 2014 Tyco Fire Protection Products. All rights reserved. All specifications and other information shown were current as of document revision date and are subject to change without notice.

RSN: *1167880*
Permit #: *2016-1214781-LT*

Simplex

System Accessories

UL, CSFM Listed;
*MEA (NYC) Acceptance**

Fire Alarm Control Relays, Track Mount and Encapsulated; Model 4098-9843 and 2088 Series

Features

UL listed under Standard 864 as Control Unit Accessory (UOXX)

Track mount package availability:

- Single relay module or four relay module, with or without cover, with SPDT or DPDT contacts
- LED indicates relay module status
- Cover provide status LED viewing ports
- Multiple coil voltage inputs, diode polarized for DC
- Modules are track mounted with snap-apart feature design allowing the four relay module to be separated

Single encapsulated SPDT relay package with color coded 18 AWG wire leads, available in two versions:

- 2088-9021 (PAM-1) Provides diode polarized multiple input voltage ability and LED indication
- 4098-9843 (PAM-SD) Provides a diode polarized 24 VDC coil with in/out wiring

Description

These multi-purpose control relays offer SPDT or DPDT, 10 A (or 7 A) contacts in a variety of mechanical packages. Models are available for coil operation by one of four input voltages allowing a single relay to be energized from a voltage source of 18-35 VDC or VAC, 120 VAC, or 230 VAC (not available with 4098-9843). Voltage selection is made by wiring to the appropriate input terminals or wire leads.

Each relay model (except model 4098-9843) contains a red LED which indicates that the relay is energized.

Mounting options are varied for application flexibility. Track mounted relays may be "snapped apart" from a standard four-module assembly and used independently if desired.

Specifications

Track Mount Relays, see page 2 for dimensions	
Coil Voltage	18-35 VAC/VDC, 120, or 230 VAC
Coil Current	SPDT models = 18 mA DPDT models = 40 mA
Terminal Blocks	Up to 14 AWG (2.08 mm^2)
Contact Ratings	10 A @ 120 VAC
	N.O. rated 1/6 HP, N.C. rated 1/8 HP
	7A @ 28 VDC and @ 230 VAC
Temperature Ratings	
UL Listed Range	32° F to 120° F (0° C to 49° C)
Humidity	85% RH Non-condensing

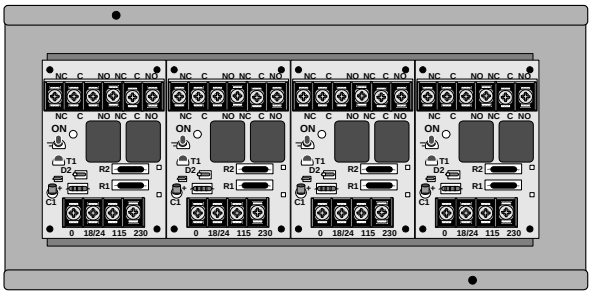

2088-9020, MR204/C, Four DPDT Relay Package with Enclosure (shown with cover removed)

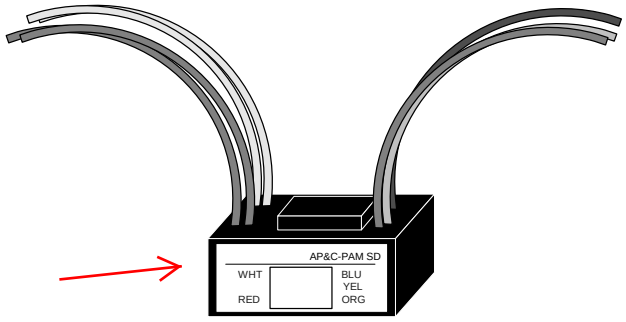

Encapsulated Relay Package
(typical of 2088-9021, PAM-1 and 4098-9843, PAM-SD)

Specifications *Continued*

Encapsulated Relays, see page 2 for dimensions		
Connections		18 AWG (0.82 mm^2) color-coded wire leads
Relay 2088-9021		
Contact Ratings		10 A @ 120 VAC, resistive
Coil Ratings	Voltage	18-35 VAC/VDC, 120, or 240 VAC
	Current	15 mA @ 24 VAC/VDC, & @ 120 or 230 VAC
Relay 4098-9843		
Coil Ratings		18-32 VDC input, polarized, 15 mA @ 24 VDC
Contact Ratings		7 A at 0.35 p.f @ 28 VDC & 120 VAC
		250 µA @ 5 VDC
Temperature Ratings		
UL Listed Range		32° F to 120° F (0° C to 49° C)
Humidity		100% RH, condensing

* Listings are under Apollo America Inc. per model numbers shown on page 2. See CSFM Listing 7300-1004:0101 for allowable values and/or conditions concerning material presented in this document.

RSN: ***1167880***
Permit #: ***2016-1214781-LT***

Relay Selection Chart

Module Positions	Reference Number	Model Number	Relay Type	Packaging	Dimensions
One	2088-9007	MR-101/T	SPDT	Track mount, without cover	3-1/4" H x 2-1/8" W x 1-1/2" D (83 mm x 54 mm x 38 mm)
	2088-9009	MR-201/T	DPDT		
	2088-9008	MR-101/C	SPDT	Track mount with cover	5-1/8" H x 3-1/8" W x 2-1/2" D (131 mm x 79 mm x 64 mm)
	2088-9010	MR-201/C	DPDT		
Four	2088-9017	MR-104/T	SPDT	Track mount, without cover	3-1/4" H x 8-1/2" W x 1-1/2" D (83 mm x 216 mm x 38 mm)
	2088-9019	MR-204/T	DPDT		
	2088-9018	MR-104/C	SPDT	Track mount with cover	5-1/8" H x 9-1/2" W x 2-1/2" D (131 mm x 241 mm x 64 mm)
	2088-9020	MR-204/C	DPDT		
NA	2088-9021	PAM-1	SPDT	Encapsulated, multi-voltage coil, color coded 18 AWG (0.82 mm^2) wire leads, with coil status LED	1-1/2" H x 1" W x 7/8" D (38 mm x 25.4 mm x 22 mm)
	4098-9843	PAM-SD		Encapsulated, 24 VDC coil, color coded 18 AWG (0.82 mm^2) wire leads (no LED)	1-1/2" H x 1-3/16" W x 13/16" D (38 mm x 30 mm x 21 mm)

Track Mount Relay Wiring Reference

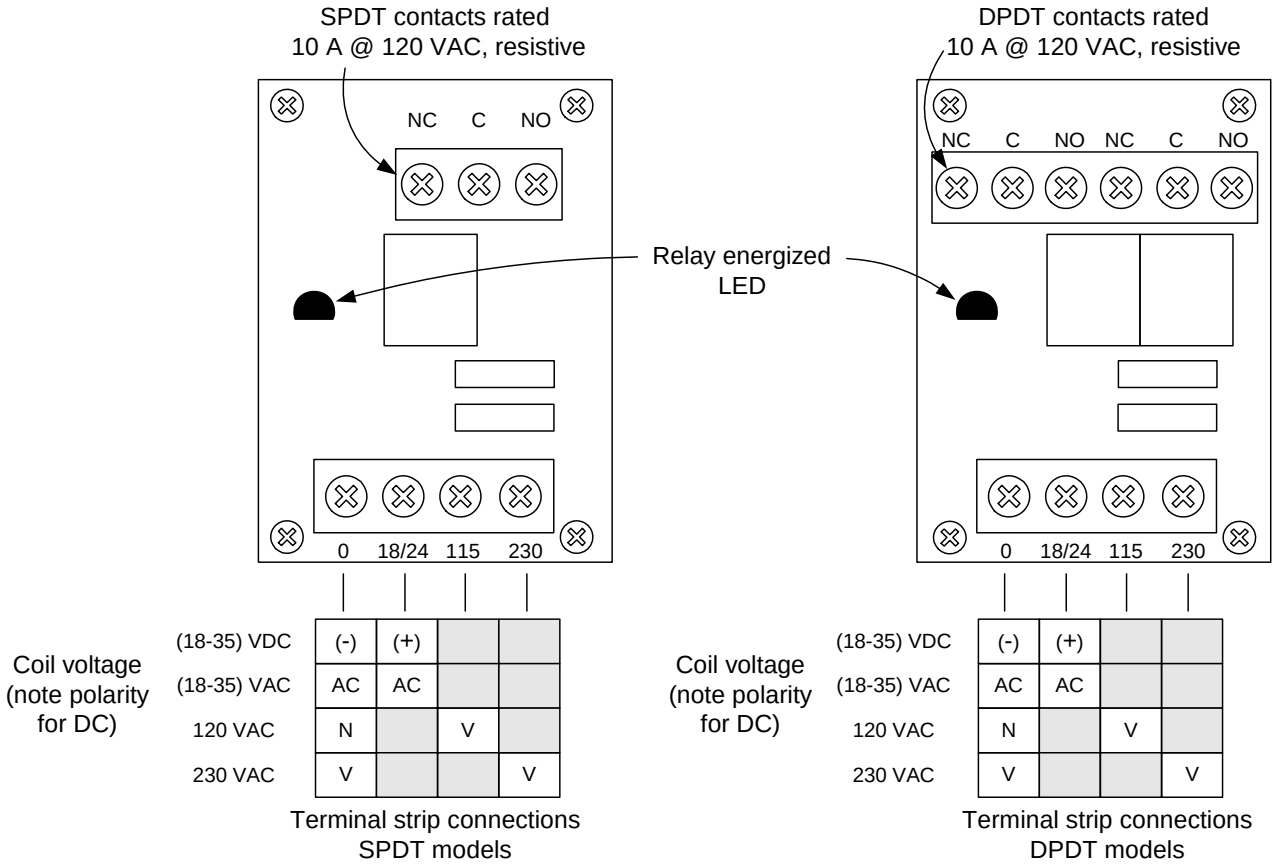

TYCO, SIMPLEX, and the product names listed in this material are marks and/or registered marks. Unauthorized use is strictly prohibited.

© 2014 Tyco Fire Protection Products. All rights reserved. All specifications and other information shown were current as of document revision date and are subject to change without notice.

RSN: ***1167880***
Permit #: ***2016-1214781-LT***

Simplex® TrueAlert Multi-Candela Notification Appliances

*UL, ULC, CSFM Listed; FM Approved; MEA (NYC) Acceptance**

Visible Notification Appliances with Synchronized Flash; Non-Addressable, Smart*Sync* Operation Compatible

Features

Visible only (V/O) 24 VDC notification appliances with high output xenon strobe, available for wall or ceiling mount:

- Intensity is selectable as 15, 30, 75, or 110 candela with visible selection jumper secured behind strobe housing
- Operation is compatible with ADA requirements (refer to important installation information on page 3)
- Polarized input allows connection to compatible reverse polarity, supervised notification appliance circuit (NAC)
- Regulated circuit design ensures consistent flash output and provides controlled inrush current
- Rugged, high impact, flame retardant thermoplastic housings are available in red or white with clear lens
- Listed to UL 1971 and ULC S526

Strobes provide synchronized flash for use with:

- Simplex® fire alarm control panels with NACs selected to provide strobe synchronization or SmartSync two-wire control
- 4009 IDNet NAC Extenders
- Separate strobe Synchronization Modules that are available for Class B or Class A operation
- Separate SmartSync Control Modules (SCMs) that provide Class B or Class A output from conventional NAC inputs

Strobe housings provides flexible, easy, and convenient semi-flush or surface wall mounting:

- Rear of housing does not extend into box
- Wall mount strobes easily mount to single gang, double gang, or 4-inch square outlet box
- Ceiling mount strobes mount to single gang boxes

Wall mount strobe features:

- Wiring terminals are accessible from the front of the housing providing easy access for installation, inspection, and testing
- Covers are available separately to convert housing color

Optional adapters and wire guards:

- Wall mount strobe adapters are available to cover surface mounted electrical boxes and to adapt to Simplex 2975-9145 boxes
- UL listed red wire guards are available for wall or ceiling mount strobes*

* Refer to page 2 for guard listing. This product has been approved by the California State Fire Marshal (CSFM) pursuant to Section 13144.1 of the California Health and Safety Code. See CSFM Listing 7125-0026:316 for allowable values and/or conditions concerning material presented in this document. Refer to page 2 for listing status of wire guards. Additional listings may be applicable; contact your local Simplex product supplier for the latest status. Listings and approvals under Simplex Time Recorder Co. are the property of Tyco Fire Protection Products.

Wall Mount Strobes

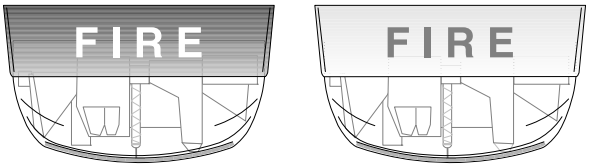

Ceiling Mount Strobes

Description

Multi-Candela TrueAlert synchronized strobes provide convenient installation to standard electrical boxes. The enclosure designs are both impact and vandal resistant and provide a convenient strobe intensity selection. Since each model can be selected for intensity output, on-site model inventory is minimized and changes encountered during construction can be easily accommodated.

Wall mount strobe housings are a one-piece assembly (including lens) that mounts to a single or double gang, or 4” square standard electrical box. The cover can be quickly removed (a tool is required) and covers are available separately for color conversion.

Ceiling mount strobes install using standard single gang electrical boxes. Color choice is determined by model number.

Strobe Intensity Selection

During installation, a selection plug at the back of the housing determines the desired strobe intensity. An attached flag with black letters on a highly visible yellow background allows the selected intensity to be seen at the side of the strobe lens.

Strobe Application Reference

Proper selection of visible notification is dependent on occupancy, location, local codes, and proper applications of: the *National Fire Alarm Code* (NFPA 72), ANSI A117.1; the appropriate model building code: BOCA, ICBO, or SBCCI; and the application guidelines of the Americans with Disabilities Act (ADA).

RSN: ***1167880***
Permit #: ***2016-1214781-LT***

Synchronized Strobes

Multiple Strobes. When multiple strobes and their reflections can be seen from one location, synchronized flashes reduce the probability of photo-sensitive reactions as well as the annoyance and possible distraction of random flashing. These multi-candela strobes are synchronized over a two-wire circuit when connected to compatible NACs, to compatible Synchronized Flash Modules, or to SmartSync Control Modules.

SmartSync Two-Wire Control

Some applications desire the audible notification appliances to be capable of being silenced before the alarm condition is reset (on-until-silenced) while the visible notification appliances are kept activated until the alarm condition is reset (on-until-reset). SmartSync operation mode provides this function using a single circuit (two-wire operation).

SmartSync Control Sources

SmartSync two-wire control is available from:

- 4006, 4007ES Hybrid, 4008, 4010, 4010ES, 4100ES, and 4100U Fire Alarm Control Panels (refer to individual product data sheets for more information)
- 4009 IDNet NAC Extenders (refer to data sheet S4009-0002)
- SmartSync Control Module (SCM) Model 4905-9938 (refer to data sheet S4905-0003)

Additional SmartSync compatible notification appliances include separate horns and combination horn/strobe notification appliances.

Product Selection

Multi-Candela Visible Notification Appliances (Strobes)

Model	Mounting	Housing Color	"FIRE" Lettering	Description
4906-9101	Wall	Red	White	Multi-candela strobe with intensity selectable as: 15, 30, 75, or 110 candela; synchronized flash rate; SmartSync two-wire control compatible
4906-9103		White	Red	
4906-9102	Ceiling	Red	White	
4906-9104		White	Red	

Wall Mount Strobe Adapters

Model	Description		Dimensions
4905-9937	Red	Surface Mount Adapter Skirt; use to cover 1-1/2" (38 mm) deep surface mounted boxes	5-3/8" H x 5-1/4" W x 1-5/8" D (136 mm x 133 mm x 41 mm) Total depth with strobe = 4-3/8" (111 mm)
4905-9940	White		
4905-9931	Red Adapter Plate for mounting to Simplex 2975-9145 box (typically for retrofit, may be mounted vertical or horizontal)		8-5/16" x 5-3/4" x 0.060" Thick (211 mm x 146 mm x 1.5 mm)
2975-9145	Red Mounting Box, requires Adapter Plate 4905-9931		7-7/8" x 5-1/8" x 2-3/4" D (200 mm x 130 mm x 70 mm)

Ceiling Mount Strobe Adapter

Model	Description	Dimensions
4905-9910	Surface Mount Adapter Plate; zinc plated; **required for mounting to handy box; not needed when using 4905-9926 guard**	4-7/8" x 3-1/8" x 0.060" D (124 mm x 79 mm x 1.5)

Synchronization Modules (refer to data sheet S4905-0003 for additional information)

Model	Description		Dimensions
4905-9914	Class B	Synchronized Flash Module; epoxy encapsulated with in/out 18 AWG (0.82 mm^2) wire leads, rated for 2 A NAC, requires 5 mA for power	1-3/8" x 2-7/16" x 13/16" (35 mm x 62 mm x 20 mm)
4905-9922	Class A		
4905-9938	SmartSync Control Module with Class B or Class A output; mounts in 4" (102 mm) square box		4" x 4-1/8" x 1-1/4" D (102 mm x 105 mm x 32 mm)

Replacement Covers and Guards

Model	Description		Dimensions
4905-9992	Red cover with white "FIRE" lettering	For Wall mount strobes	5-1/8" H x 5" W x 1-1/2" D (130 mm x 127 mm x 38 mm)
4905-9993	White cover with red "FIRE" lettering		
4905-9961*	Wall mount	Red wire guard with mounting plate, compatible with semi-flush or surface mounted boxes	6-1/16" H x 6-1/16" W x 3-1/8" D (154 mm x 154 mm x 79 mm)
4905-9926*	Ceiling mount		6-1/8" x 4-3/8" x 2-7/8" deep (156 mm x 111 mm x 73 mm)

* UL listed by Space Age Electronics Inc.

RSN: ***1167880***
Permit #: ***2016-1214781-LT***

Strobe Specifications

Wall Mount or Ceiling Mount, Common Specifications

Rated Voltage Range			Regulated 24 VDC; see Note 1 below			
Flash Rate			1 Hz			
Synchronized NAC Loading			Up to 35 synchronized strobes maximum per NAC			
Temperature Range			32° to 122° F (0° to 50° C)			
Humidity Range			10% to 93%, non-condensing at 100° F (38° C)			
Connections			Terminal blocks for 18 AWG to 12 AWG (0.82 mm^2 to 3.31 mm^2); two wires per terminal for in/out wiring			
Wall Mount	Housing Dimensions (with lens)		5-1/8" H x 5" W x 2-3/4" D (130 mm x 127 mm x 70 mm)			
	Maximum RMS Current Rating per Strobe Setting (see Note 2 below)		**15 cd**	**30 cd**	**75 cd**	**110 cd**
			60 mA	**94 mA**	**186 mA**	**252 mA**
	Reference RMS Currents at other voltages	18 VDC	53 mA	84 mA	165 mA	224 mA
		24 VDC	40 mA	63 mA	124 mA	168 mA
Ceiling Mount	Housing Dimensions (with lens)		4-3/4" L x 2-5/16" W x 2-5/8" D (121 mm x 75 mm x 67 mm)			
	Maximum RMS Current Rating per Strobe Setting (see Note 2 below)		**15 cd**	**30 cd**	**75 cd**	**110 cd**
			75 mA	**125 mA**	**233 mA**	**316 mA**
	Reference RMS Currents at other voltages	18 VDC	67 mA	111 mA	207 mA	281 mA
		24 VDC	50 mA	83 mA	155 mA	211 mA

NOTES:

1. "Regulated 24 VDC" refers to the voltage range of 16 to 33 VDC per UL Standard 1971, *Signaling Devices for the Hearing Impaired*. This voltage range is the absolute operating range. Operation outside of this range may cause permanent damage to the strobe. Please note that 16 VDC is the lowest operating voltage that is allowed at the last appliance on the NAC under worst case conditions.
2. The maximum RMS current listed is the device nameplate rating. Strobe designs are constant wattage and the maximum RMS current rating occurs at the lowest allowable operating voltage. (RMS is root mean square and refers to the effective value of a varying current waveform.)

Installation Reference, Surface or Semi-Flush Wall Mounting

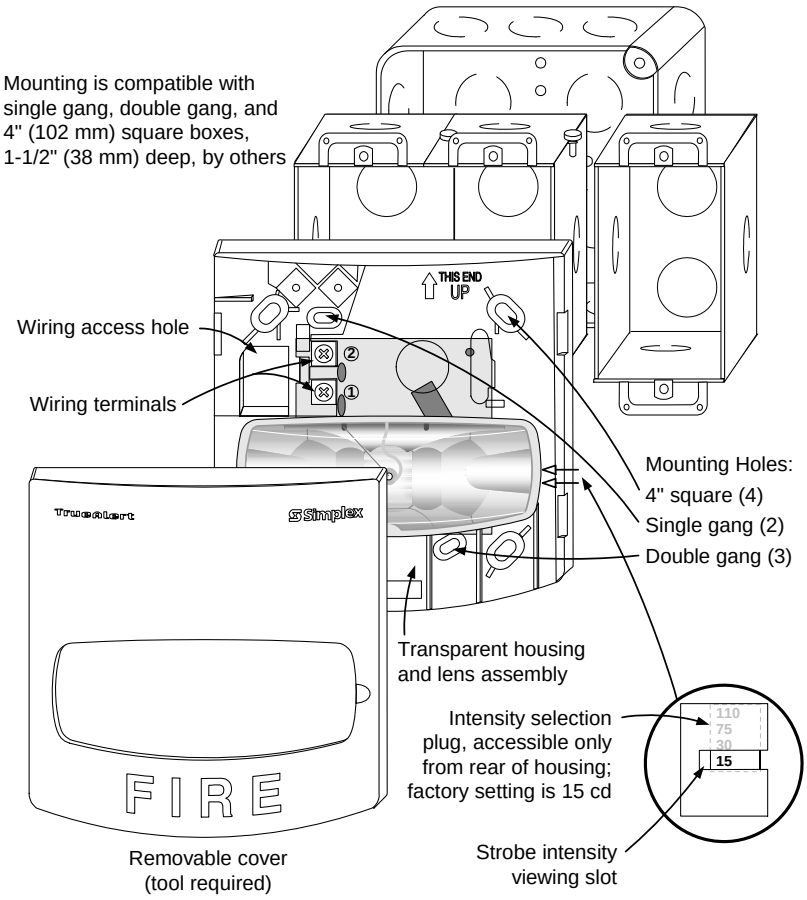

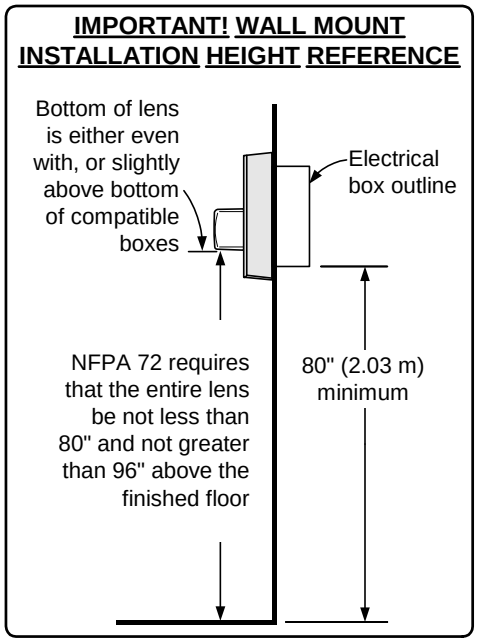

RSN: ***1167880***
Permit #: ***2016-1214781-LT***

Ceiling Mount Strobe Installation Reference

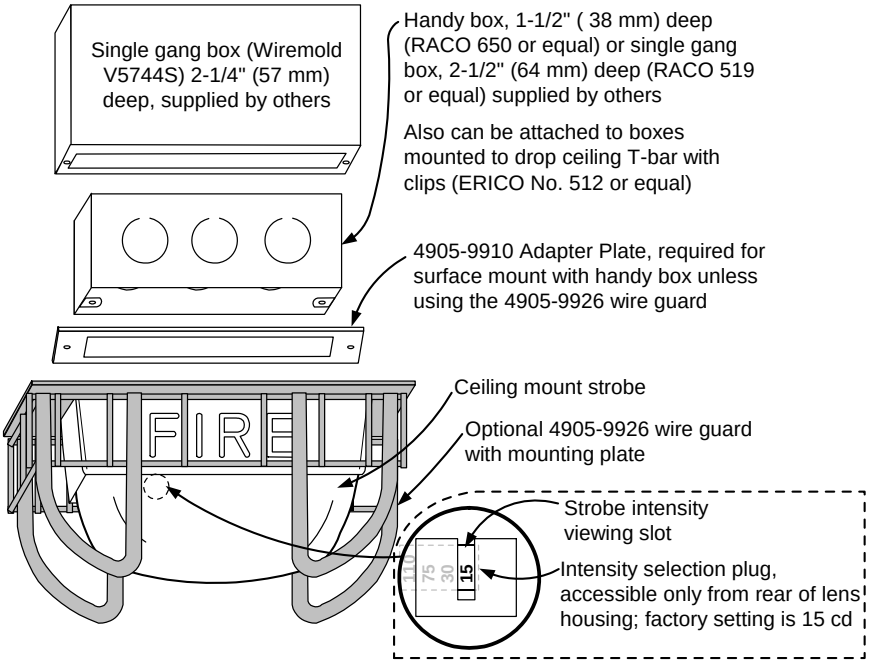

Wall Mount Installation Reference; Adapter Plate, Guard, and Adapter Skirt

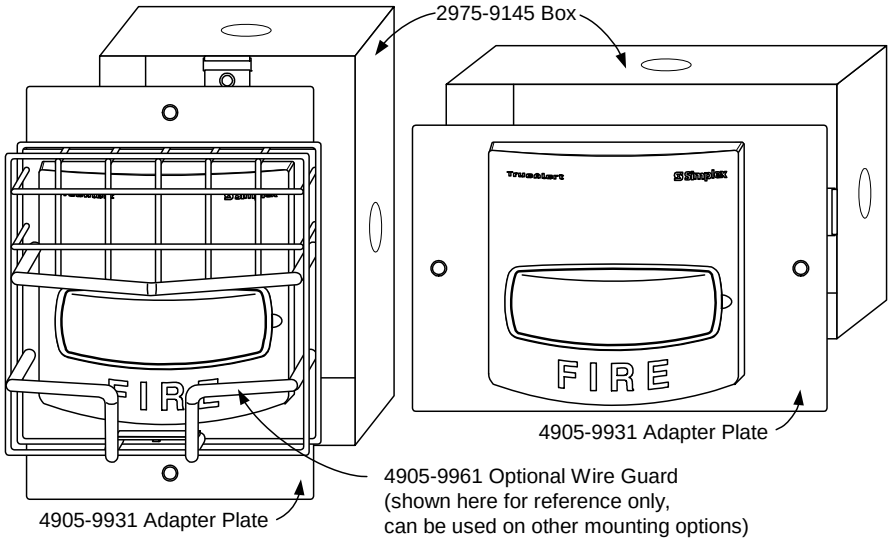

Surface Mounting Reference with Optional Adapter Skirt and Optional Wire Guard

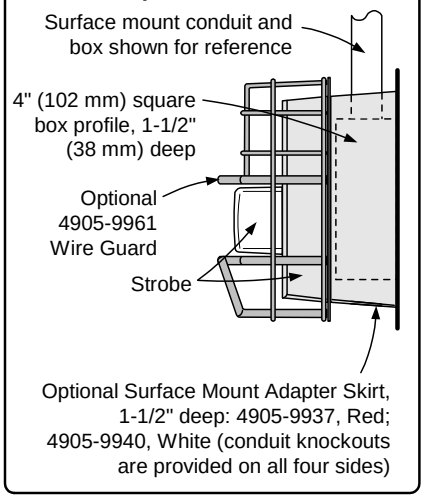

TYCO, SIMPLEX, and the product names listed in this material are marks and/or registered marks. Unauthorized use is strictly prohibited. NFPA 72 and National Fire Alarm and Signaling Code are registered trademarks of the National Fire Protection Association (NFPA).

© 2014 Tyco Fire Protection Products. All rights reserved. All specifications and other information shown were current as of document revision date and are subject to change without notice.

RSN: ***1167880***
Permit #: ***2016-1214781-LT***

Simplex

True*Alert* Multi-Candela Notification Appliances

UL, cUL, CSFM Listed;
*FM Approved**

SmartSync Operation Audible/Visible Notification
with Chime and Synchronized Flash, Non-Addressable

Features

Audible/visible notification appliances with private mode electronic chime and high output xenon strobe, available for wall or ceiling mount:

- Operation is compatible with ADA requirements (refer to important installation information on page 3)
- Rugged, high impact, flame retardant thermoplastic housings are available in red or white with clear lens

Operates over a two-wire Simplex® SmartSync circuit to provide:

- Private mode chime tones controlled separately from strobes on the same two-wire circuit
- SmartSync chime activation of Temporal pattern, March Time pattern (at 60 BPM), or on continuously (at 60 BPM)
- Strobe appliances on the same circuit operating at a synchronized 1 Hz flash rate
- Refer to page 2 for SmartSync control list and additional operation information

Wall mount chime/strobes features:

- Wiring terminals accessible from the front of the housing providing easy access for installation, inspection, and testing
- Covers are available separately to convert housing color

Optional adapters and wire guards:

- Wall mount adapters are available to cover surface mounted electrical boxes and to adapt to Simplex 2975-9145 boxes
- UL listed red wire guards are available for wall or ceiling mount chime/strobes*

Visible notification appliance (strobe):

- 24 VDC xenon strobe; intensity is selectable as 15, 30, 75, or 110 candela with visible selection jumper secured behind strobe housing
- Regulated circuit design ensures consistent flash output and provides controlled inrush current
- Listed to UL 1971 and to CSA standards for general signaling use in Canada (non-fire alarm applications)

Audible notification appliance (chime):

- Low current, 24 VDC electronic chime with volume and tone frequency adjustment
- Listed to UL 464 for private mode signaling and to CSA standards for general signaling use in Canada (non-fire alarm applications)

* Refer to page 2 for guard listing. This product has been approved by the California State Fire Marshal (CSFM) pursuant to Section 13144.1 of the California Health and Safety Code. See CSFM Listing 7135-0026:335 for allowable values and/or conditions concerning material presented in this document. Additional listings may be applicable; contact your local Simplex product supplier for the latest status. Listings and approvals under Simplex Time Recorder Co. are the property of Tyco Fire Protection Products.

Wall and Ceiling Mount Chime/Strobes

Description

Multi-Candela TrueAlert chime/strobes provide private mode audible notification for applications requiring notification of trained personnel instead of the general public. Typical applications would be in medical patient areas where the softer chime tones are less disruptive than conventional fire alarm audible notification.

Enclosure designs are both impact and vandal resistant, and provide a convenient strobe intensity selection. Since each model can be selected for strobe intensity output, on-site model inventory is minimized and changes encountered during construction can be easily accommodated. Installation conveniently uses standard electrical boxes.

Wall mount chime/strobe housings are a one-piece assembly (including lens) that mounts to a single or double gang, or 4" square standard electrical box. The cover can be quickly removed (a tool is required) and covers are available separately for color conversion.

Ceiling mount chime/strobe housings install using standard 4" electrical boxes. Color choice is determined by model number.

Strobe Intensity Selection

During installation, a selection plug at the back of the housing determines the desired strobe intensity. An attached flag with black letters on a highly visible yellow background allows the selected intensity to be seen at the side of the strobe lens.

RSN: *1167880*
Permit #: *2016-1214781-LT*

Strobe Application Selection

Proper selection of visible notification is dependent on occupancy, location, local codes, and proper applications of: the *National Fire Alarm Code* (NFPA 72), ANSI A117.1; the appropriate model building code: BOCA, ICBO, or SBCCI; and the application guidelines of the Americans with Disabilities Act (ADA).

Synchronized Strobes

Multiple Strobes. When multiple strobes and their reflections can be seen from one location, synchronized flashes reduce the probability of photo-sensitive reactions as well as the annoyance and possible distraction of random flashing. The multi-candela strobes of these chime/strobes are synchronized by the controlling SmartSync operation NAC.

SmartSync Two-Wire Control

SmartSync operation mode allows a two-wire circuit to provide the ability to activate both the chime and strobe on the same NAC and then allow the chime to be silenced while the strobe remains flashing. The chime operates as "on-until-silenced" while the strobe operation is "on-until-reset."

SmartSync Control Sources

- 4006, 4008, 4007ES Hybrid, 4010, 4010ES, 4100ES, and 4100U Fire Alarm Control Panels (refer to individual product data sheets for more information)
- 4009 IDNet NAC Extender (refer to data sheet S4009-0002)
- SmartSync Control Module (SCM) 4905-9938 (refer to data sheet S4905-0003)

Additional SmartSync compatible notification appliances include separate chimes and combination chime/strobe notification appliances.

Product Selection

Multi-Candela Chime/Strobes

Model	Mounting	Housing Color	"FIRE" Lettering	Description
4906-9133	Wall	Red	White	Electronic chime with Multi-Candela Strobe; strobe intensity selectable as: 15, 30, 75, or 110 candela; operates with SmartSync two-wire control
4906-9134		White	Red	
4906-9135	Ceiling	Red	White	
4906-9136		White	Red	

Wall Mount Chime/Strobe Accessories

Model	Description		Dimensions
4905-9937	Red	Surface Mount Adapter Skirt; use to cover 1-1/2" (38 mm) deep surface mounted boxes	5-3/8" H x 5-1/4" W x 1-5/8" D (136 mm x 133 mm x 41 mm) depth with strobe = 4-3/8" (111 mm)
4905-9940	White		
4905-9931	Red Adapter Plate for mounting to Simplex 2975-9145 box (typically for retrofit, may be mounted vertical or horizontal)		8-5/16" x 5-3/4" x 0.060" Thick (211 mm x 146 mm x 1.5 mm)
2975-9145	Red Mounting Box, requires Adapter Plate 4905-9931		7-7/8" x 5-1/8" x 2-3/4" D (200 mm x 130 mm x 70 mm)

SmartSync Control Module

Model	Description	Dimensions
4905-9938	SmartSync Control Module with Class B or Class A output; mounts in 4" (102 mm) square box; refer to data sheet S4905-0003 for details	4" x 4-1/8" x 1-1/4" D (102 mm x 105 mm x 32 mm)

Replacement Covers for Wall Mount Chime/Strobes

Model	Description	Dimensions
4905-9994	Red cover with white "FIRE" lettering	5-1/8" H x 5" W x 1-1/2" D (130 mm x 127 mm x 38 mm)
4905-9995	White cover with red "FIRE" lettering	

Wire Guards and Ceiling Mount Chime/Strobe Adapter

Model		Description		Dimensions
4905-9961*		Wall mount red wire guard with mounting plate, compatible with semi-flush or surface mounted boxes		6-1/16" H x 6-1/16" W x 3-1/8" D (154 mm x 154 mm x 79 mm)
4905-9927*	Ceiling Mount	Red Wire Guard for mounting to flush mounted electrical box		8-1/2" x 6-1/8" x 3" (216 mm x 156 mm x 76 mm)
4905-9928*		Red Adapter Plate, required to mount guard to surface mounted electrical box		9" x 7" (229 mm x 178 mm)
4905-9915		White	Surface Mount Adapter Box Extension, use to cover 1-1/2" deep surface mounted boxes	4-3/4" x 6-7/8" x 1-1/2" deep, (121 mm x 175 mm x 38 mm)
4905-9916		Red		

* UL listed by Space Age Electronics Inc.

RSN: ***1167880***
Permit #: ***2016-1214781-LT***

Chime/Strobe Specifications

Wall Mount or Ceiling Mount, Common Specifications						
Rated Voltage Range			Regulated 24 DC; see Note 1 below			
Flash Rate and Synchronized NAC Loading			1 Hz; with up to 35 synchronized strobes maximum per NAC			
Environmental; Temperature and Humidity			32° to 122° F (0° to 50° C); 10% to 93%, non-condensing at 100° F (38° C)			
Connections			Terminal blocks for 18 AWG to 12 AWG (0.82 mm^2 to 3.31 mm^2); two wires per terminal for in/out wiring			
Chime Output Characteristics (see Note 2)			Tone is adjustable from 750 Hz to 1300 Hz; factory setting is approximately 800 Hz			
			Sound output is adjustable from 34 dBA to 63 dBA; factory setting is 63 dBA			
Sound Output Ratings per UL 464 Reverberant Chamber test @ 10 ft (3 m)			63 dBA			
Wall Mount	Housing Dimensions (with lens)		5-1/8" H x 5" W x 2-3/4" D (130 mm x 127 mm x 70 mm)			
	Maximum RMS Current Rating per Strobe Setting (see Note 3 below)		**15 cd**	**30 cd**	**75 cd**	**110 cd**
			70 mA	**105 mA**	**200 mA**	**265 mA**
	Reference RMS Currents at other voltages	18 VDC	62 mA	93 mA	178 mA	236 mA
		24 VDC	47 mA	70 mA	133 mA	177 mA
Ceiling Mount	Housing Dimensions (with lens)		4-3/4 L" x 6-7/8" W x 2-5/8" D (121 mm x 175 mm x 67 mm)			
	Maximum RMS Current Rating per Strobe Setting (see Note 3 below)		**15 cd**	**30 cd**	**75 cd**	**110 cd**
			85 mA	**132 mA**	**254 mA**	**343 mA**
	Reference RMS Currents at other voltages	18 VDC	76 mA	117 mA	226 mA	305 mA
		24 VDC	57 mA	88 mA	169 mA	229 mA

NOTES:

1. "Regulated 24 DC" refers to the voltage range of 16 to 33 VDC per UL Standard 1971, *Signaling Devices for the Hearing Impaired*. This voltage range is the absolute operating range. Operation outside of this range may cause permanent damage to the appliance. Please note that 16 VDC is the lowest operating voltage that is allowed at the last appliance on the NAC under worst case conditions.
2. Factory settings are recommended for most applications. Always test installed sound level against local requirements.
3. Currents are with chime on steady. The maximum RMS current listed is the device nameplate rating. Strobe designs are constant wattage and the maximum RMS current rating occurs at the lowest allowable operating voltage. (RMS is root mean square and refers to the effective value of a varying current waveform.)

Installation Reference, Surface or Semi-Flush Mounting

For additional information, refer to Installation Instructions 579-908.

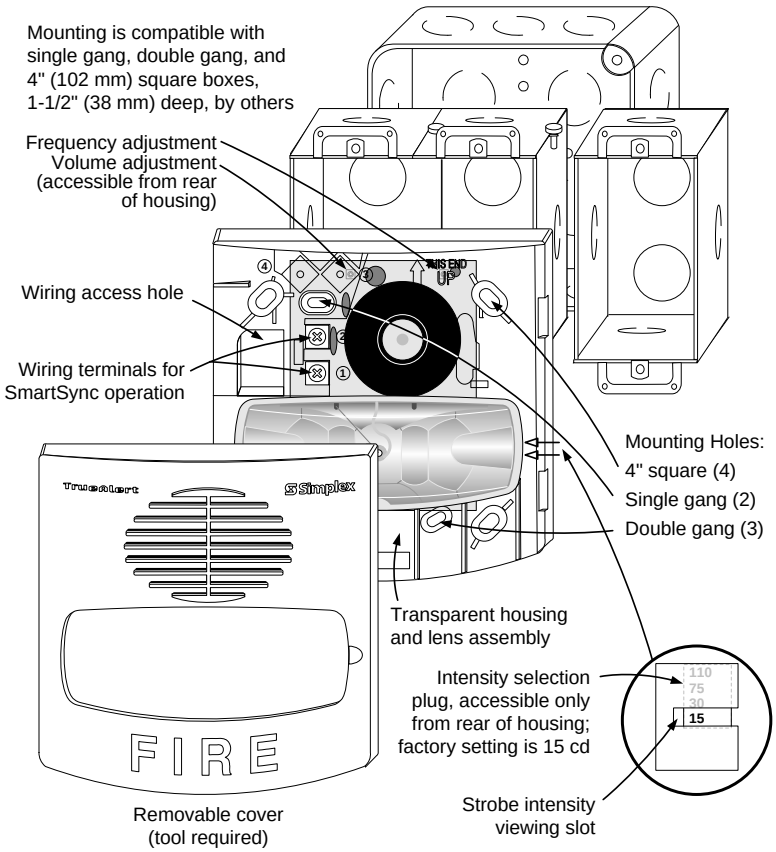

IMPORTANT! WALL MOUNT INSTALLATION HEIGHT REFERENCE

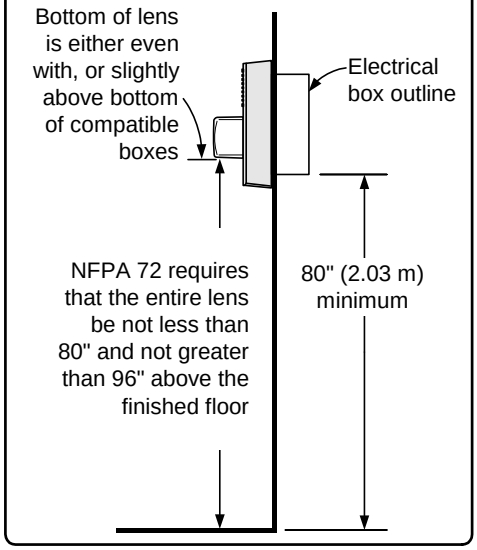

RSN: ***1167880***
Permit #: ***2016-1214781-LT***

Ceiling Mount Chime/Strobe and Guard Installation Reference

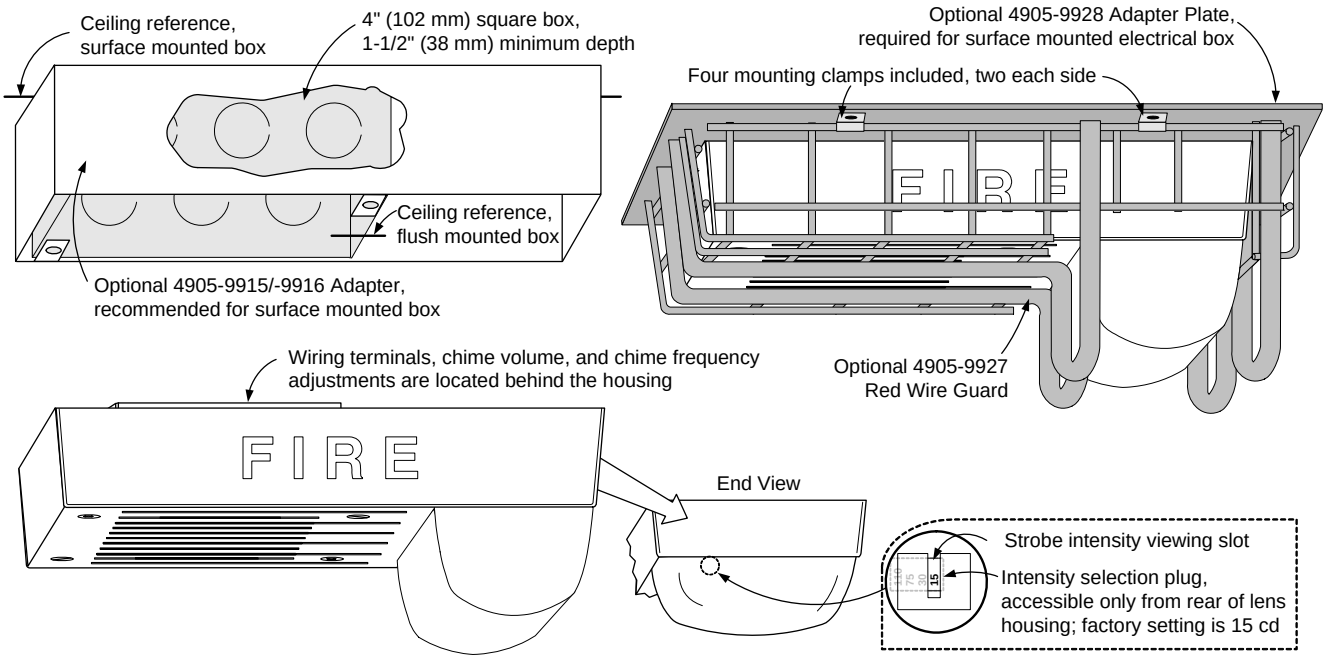

Wall Mount Installation Reference; Adapter Plate, Guard, and Adapter Skirt

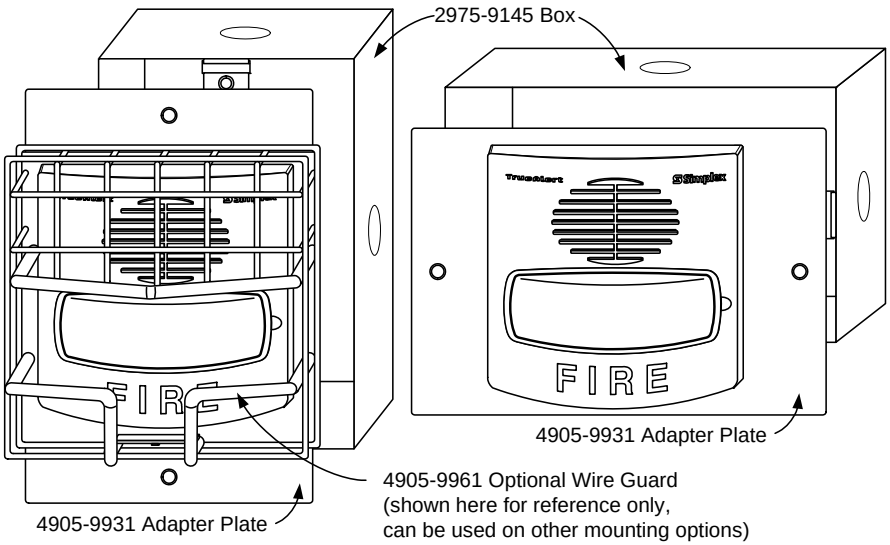

Surface Mounting Reference with Optional Adapter Skirt and Optional Wire Guard

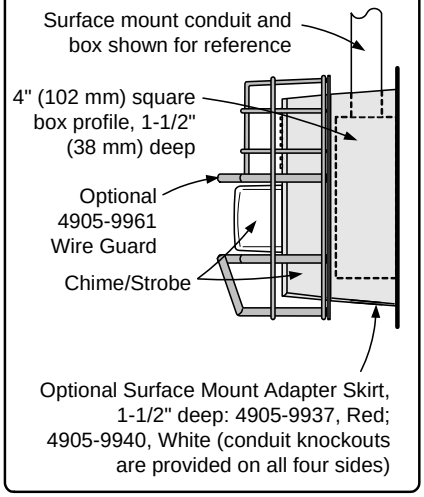

TYCO, SIMPLEX, and the product names listed in this material are marks and/or registered marks. Unauthorized use is strictly prohibited. NFPA 72 and National Fire Alarm and Signaling Code are registered trademarks of the National Fire Protection Association (NFPA).

© 2014 Tyco Fire Protection Products. All rights reserved. All specifications and other information shown were current as of document revision date and are subject to change without notice.

RSN: *1167880*
Permit #: *2016-1214781-LT*

STI HORN/STROBE DAMAGE STOPPERS®

STI-1210B

STI-1221E

STI-1217

STI-1225

c UL us
ADA Compliant
MEA
STI-1210 AND STI-1221 ONLY

PRODUCT OVERVIEW

These virtually indestructible covers (slotted for horn or speaker units and solid for strobe-only alarms) are designed to stop vandalism and accidental damage. Molded of clear, thick, UV-stabilized polycarbonate material, they are backed by a three year guarantee against breakage in normal use. Slots in the STI-1210, 1215, 1217 and 1219 allow the horn to be heard. The STI-1221, 1225, 1227 and 1229 are for strobes only. Many tough, clear spacers are available for larger strobe/horn units, retrofits, surface-mount and weather resistant applications. For the STI-1210/1221 series, spacer A has a four inch deep enclosed backbox, spacer B has an enclosed backbox molded with an integral double-gang outlet box. Spacer C has an open back for retrofit applications. Spacer D accommodates deeper units and applications with exposed conduit electrical connections. Spacer E has an open back frame for flush-mount applications. An appliance mounting plate comes with the STI-1219/1229. Unique Enviro Kits are available for extreme conditions where dampness or water is present.

KEY FEATURES

General Information

- Helps prevent accidental and intentional damage or vandalism.
- See chart for light and sound loss information.
- Easy access for service.
- Three year guarantee against breakage of polycarbonate in normal use.

Design

- Various back box and spacer depths are available to accommodate special applications.

Construction

- Covers are UV-stabilized.
- Typical working properties of polycarbonate are -40° to 250°F (-40° to 121°C).

Options

- Enviro Kit available for harsh conditions.
- See STI-1229HTR heated Type 4X enclosure for strobes in freezing conditions.

RSN: ***1167880***
Permit #: ***2016-1214781-LT***

STI Horn/Strobe Damage Stoppers®

Dimensions and Technical Information

MODELS AVAILABLE

STI-1210A	Horn/Strobe Damage Stopper cover and enclosed backbox, 4" deep, weather resistant
STI-1210B	Horn/Strobe Damage Stopper cover and enclosed backbox with double-gang outlet box
STI-1210C	Horn/Strobe Damage Stopper cover open backbox with external mounting tabs
STI-1210D	Horn/Strobe Damage Stopper cover and open backbox with conduit knockout
STI-1210E	Horn/Strobe Damage Stopper cover and open backbox for flush mount
STI-1221A	Strobe Damage Stopper cover and enclosed backbox, 4" deep, weatherproof with drain vent, Type 3R
STI-1221A4X	Strobe Damage Stopper cover and enclosed backbox, 4" deep, weatherproof, Type 4X
STI-1221B	Strobe Damage Stopper cover and solid enclosed backbox and double-gang outlet box
STI-1221C	Strobe Damage Stopper cover and open backbox with external mounting tabs
STI-1221D	Strobe Damage Stopper cover and open backbox with conduit knockout
STI-1221E	Strobe Damage Stopper cover and open backbox for flush mount
SUB-84	Tamper resistant screws
SUB-121	Enviro Kit for D and E models
SUB-122	Enviro Kit for B and C models
SUB-06297D	"D" spacer only
SUB-06297E	"E" spacer only
STI-1283	Backplate for "D" and "E" models
19038	Bit for tamper resistant screws
SUB-6297B20	3/4" conduit hub for "B" and "C" backbox outdoor rated)

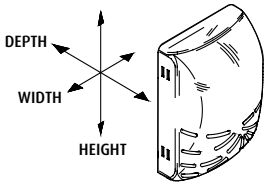

STI-1210

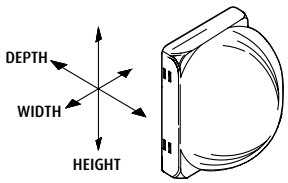

STI-1221

STI-1210 Series Horn/Strobe Covers				STI-1221 Series Strobe Covers		
Spacer	H	W	D	H	W	D
A	8.5 in. (216mm)	6.5 in. (165mm)	6.25 in. (159mm)	8.5 in. (216mm)	6.5 in. (165mm)	6.25in. (159mm)
B	8.5 in. (216mm)	6.5 in. (165mm)	3.5 in. (89mm)	8.5 in. (216mm)	6.5 in. (165mm)	3.5 in. (89mm)
C	8.5 in. (216mm)	6.5 in. (165mm)	4.75 in. (120mm)	8.5 in. (216mm)	6.5 in. (165mm)	4.75 in. (120mm)
D	8.5 in. (216mm)	6.5 in. (165mm)	5.75 in. (146mm)	8.5 in. (216mm)	6.5 in. (165mm)	5.75 in. (146mm)
E	8.5 in. (216mm)	6.5 in. (165mm)	4 in. (102mm)	8.5 in. (216mm)	6.5 in. (165mm)	4 in. (102mm)

APPROVALS & WARRANTY

TESTING

It has been tested and approved or listed by:
· Underwriter Laboratories and Canadian UL File S7025
· cUL approval for UL 1638 only
· CSFM needs local approval
· MEA STI-1210 and STI-1221 series only
· UL Listed for fire voice speakers for STI-1210 series only
· ADA Compliant

WARRANTY

Three year guarantee against breakage of polycarbonate in normal use.

Performance Review Manufacturer	Light Loss %
STI-1210 SERIES	
ADT SECURITY (ADTG1-V Series), EST/EDWARDS(G1-V Series, G1-HV Series, G1-HOV Series, EG1-V Series, EG1-HV Series, EG1-HOV Series), HONEYWELL (XLSG1-V, XLSG1-HV, XLSG1-HOV Series), MIRCOM (MG1-V, MG1-HV, MG1-HOV Series), SIEMENS (G1-V Series), ZITON PTY LTD (ZG1-V Series)	40%
EST/EDWARDS (2440S, 202 Series), HONEYWELL (XLS202 Series), MIRCOM (MS Series), MIRTONE (MG1-V Series), SIEMENS (202 Series)	43%
AMSECO-(SL24W-153075 CLEAR, A, B, G or R, SL24C-3075110 A, B, G or R, CSL24W-A, B, G or R, CSL24C-A, B, G or R), MIRCOM (FS-240), POTTER ELECTRIC (AS-24-153075R, AS-24-153075W)SYSTEM SENSOR (SS24110ADA)	47%
SYSTEM SENSOR (P2, PC2, P4, PC4, SX, SC)	53%
STI-1221 SERIES	
AMSECO-(SL24W-153075 CLEAR, A, B, G or R, SL24C-3075110 A, B, G or R, CSL24W-A, B, G or R, CSL24C-A, B, G or R), MIRCOM (FS-240), POTTER ELECTRIC (AS-24-153075R, AS-24-153075W)	26%
DETECTION SYSTEMS (GES24 Series), GENTEX (GES24 Series), HARRINGTON SIGNAL (GES24 Series), NATIONAL TIME & SIGNAL (GES24 Series), SECUTRON (GES24 Series)	31%
ADT SECURITY (ADTG1-V Series), EST/EDWARDS (G1-V Series, G1-HV Series, G1-HOV Series, EG1-V Series, EG1-HV Series, EG1-HOV Series), HONEYWELL (XLSG1-V Series, XLSG1-HV Series, XLSG1-HOV Series), MIRCOM (MG1-V, MG1-HV, MG1-HOV Series), SIEMENS (G1-V Series), ZITON PTY LTD. (ZG1-V Series)	34%
AMESCO (SL24W-153075), SYSTEM SENSOR (SS24110ADA)	37%
EST/EDWARDS (2440S, 202 Series), HONEYWELL (XLS202 Series), MIRCOM (MS Series), MIRTONE (MG1-V Series), SIEMENS (202 Series)	45%
FARADAY LLC (2700)	57%
SYSTEM SENSOR (P2, PC2, P4, PC4, SX, SC)	61%

Use of horn/strobe cover on audible device decreases the sound output by 6dB(A).

SPACER	DESCRIPTION
A	Enclosed backbox, 4" deep (includes neoprene gasket)
A4X	Enclosed backbox, 4" deep Type 4X (includes silicone gasket)
B	Enclosed backbox with double-gang outlet box
C	Open backbox with external mounting tabs
D	Open backbox with conduit knockout
E	Open backbox for flush mount

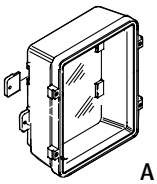

A SPACER

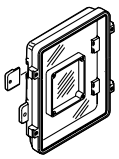

B SPACER

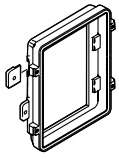

C SPACER

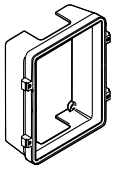

D SPACER

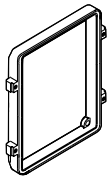

E SPACER

RSN: ***1167880***
Permit #: ***2016-1214781-LT***

STI Horn/Strobe Damage Stoppers®

Dimensions and Technical Information

MODELS AVAILABLE

STI-1215	Stopper Dome for Horn/ Speaker/Strobe for flush mount
STI-1217	Stopper Dome for Horn/ Speaker/Strobe with open backbox
STI-1219	Stopper Dome for Horn/ Speaker/Strobe with enclosed backbox
STI-1225	Stopper Dome for Strobe only flush mount
STI-1227	Stopper Dome for Strobe only with open backbox
STI-1229*	Stopper Dome for strobe only with enclosed backbox, Type 4X
STI-1212	Spacer kit
STI-1222	Enclosed backbox for Stopper Dome
STI-1284	Single Gang Mounting Adapter for STI-1219 and STI-1229
SUB-84	Tamper resistant screws
SUB-123	Enviro Kit includes three gaskets
19038	Bit for tamper resistant screws

***Hazardous models available. See STI-1229.**

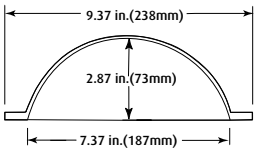

STI-1215 / STI-1225

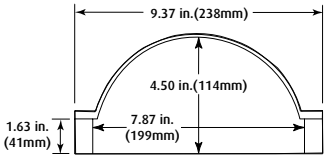

STI-1217 / STI-1227

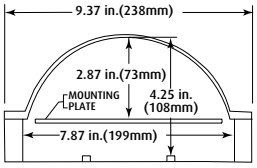

STI-1219 / STI-1229

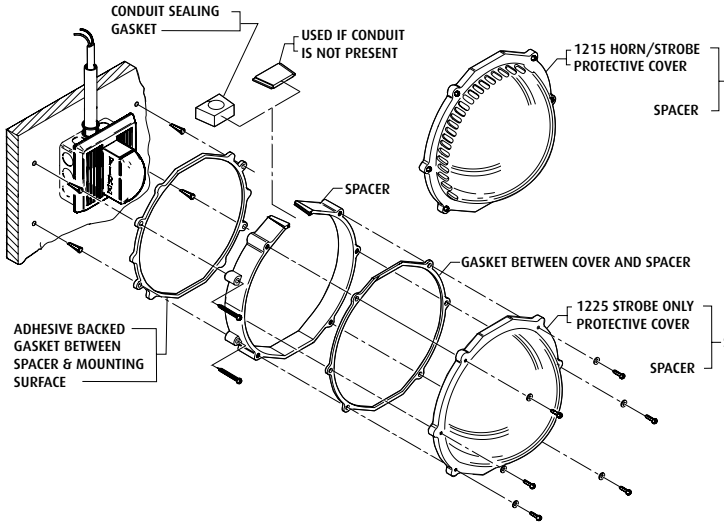

APPROVALS & WARRANTY

TESTING

It has been tested and approved or listed by:

- Underwriter Laboratories and Canadian UL File S7025
- cUL approval for UL 1638 only
- CSFM needs local approval
- For hazardous applications in Canada, to meet cUL, your strobe must be ULC Listed
- ADA Compliant

WARRANTY

Three year guarantee against breakage of polycarbonate in normal use.

Performance Review Manufacturer	**Light Loss %**
STI-1215/17/19 SERIES	
ADT SECURITY (ADTG1-V Series), EST/EDWARDS (G1-V Series, G1-HV Series, G1-HOV Series, EG1-V Series, EG1-HV Series, EG1-HOV Series), HONEYWELL (XLSG1-V Series, XLSG1-HV Series, XLSG1-HOV Series), MIRCOM (MG1-V Series, MG1-HV Series, MG1-HOV Series), MIRTONE (MG1-V Series), SIEMENS (G1-V Series), ZITON PTY LTD (ZG1-V SERIES)	20%
AMSECO (SL24W-153075), AMSECO-COLORED LENSES (SL24W-153075 A, B, G or R, SL24C-3075110 A, B, G or R, CSL24W-A, B, G or R, CSL24C-A, B, G or R), MIRCOM (FS-240), POTTER ELECTRIC (AS-24-153075R, AS-24-153075W)	22%
FARADAY (2700), SIEMENS (U-MCS Series)	23%
DETECTION SYSTEMS (GES24 Series, GES24-15/75), GENTEX (GES24 Series, GES224-15/75), HARRINGTON SIGNAL (GES24 Series, GES24-15/75), NATIONAL TIME & SIGNAL (GES24 Series, GES24-15/75), SECUTRON (GES24 Series, GES24-15/75)	27%
SYSTEM SENSOR (SS24110ADA)	26%
EST/EDWARDS (2440S Series, 202 Series), HONEYWELL (XLS202 Series), MIRCOM (MS Series), SIEMENS (202 Series)	33%
WHEELOCK (RSS-24MCW)	34%
WHEELOCK (RSS-24MCC)	36%
SYSTEM SENSOR (P2, PC2, P4, PC4, SX, SC)	39%
STI-1225/27/29 SERIES	
SYSTEM SENSOR (P2, PC2, P4, PC4, SX, SC)	28%
WHEELOCK (RSS-24MCW)	31%
ADT SECURITY (ADTG1-V Series), EST/EDWARDS (G1-V Series, G1-HV Series, G1-HOV Series, EG1-V Series, EG1-HV Series, EG1-HOV Series), HONEYWELL (XLSG1-V Series, XLSG1-HV Series, XLSG1-HOV Series), MIRCOM (MG1-V Series, MG1-HV Series, MG1-HOV Series), MIRTONE (MG1-V Series), SIEMENS (G1-V Series), ZITON PTY LTD. (ZG1-V SERIES)	32%
FARADAY (2700), SIEMENS (U-MCS Series)	33%
EST/EDWARDS (2440S Series, 202 Series), HONEYWELL (XLS202 Series), MIRCOM (MS Series), SIEMENS (202 Series)	34%
WHEELOCK (RSS-24MCC)	35%
SYSTEM SENSOR (SS24110ADA)	36%
AMSECO (SL24W-153075), AMSECO-COLORED LENSES (SL24W-153075 A, B, G or R, SL24C-3075110 A, B, G or R, CSL24W-A, B, G or R, CSL24C-A, B, G or R) SCM24W), DETECTION SYSTEMS (GES24 Series, GES24-15/75), GENTEX (GES24 Series, GES224-15/75), HARRINGTON SIGNAL (GES24 Series, GES24-15/75), HONEYWELL (XLSG1-HOV Series), MIRCOM (FS-240), NATIONAL TIME & SIGNAL (GES24 Series, GES24-15/75), POTTER ELECTRIC (AS-24-153075R, AS-24-153075W), SECUTRON (GES24 Series, GES24-15/75)	37%

Sound loss for STI-1215, 1217 and 1219
Horns: Amseco Audible Horn Sounders - 6.2 dBA
Speakers: Siemens Adapter Series (0.5, 1, or 2 watt taps only) - 4.1 dBA

RSN: ***1167880***
Permit #: ***2016-1214781-LT***

STI Horn/Strobe Damage Stoppers®

Dimensions and Technical Information

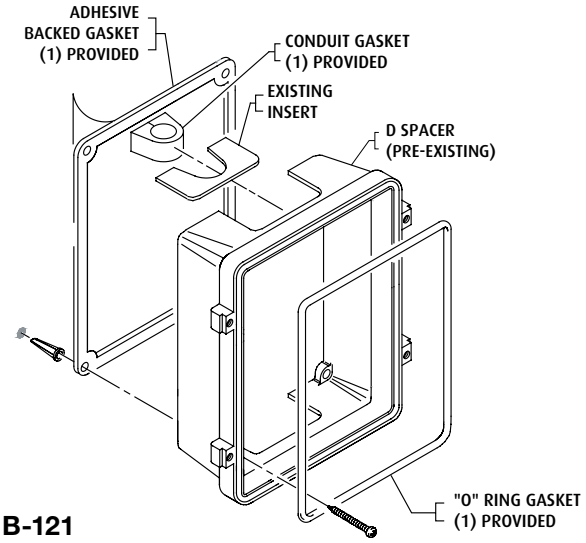

SUB-121

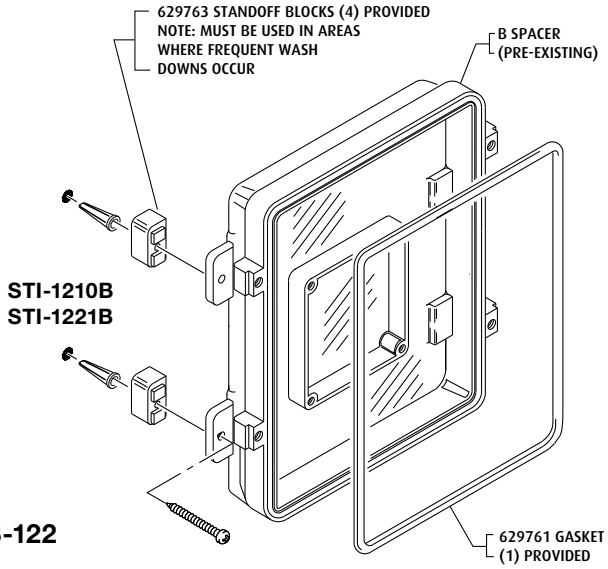

SUB-122

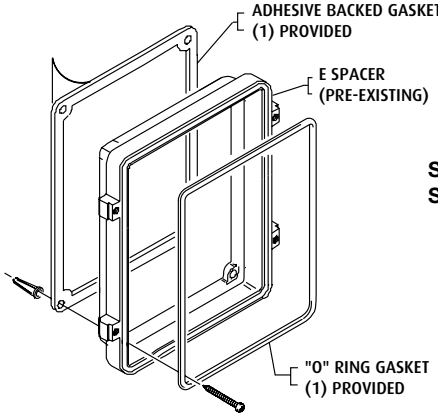

STI-1210E
STI-1221E

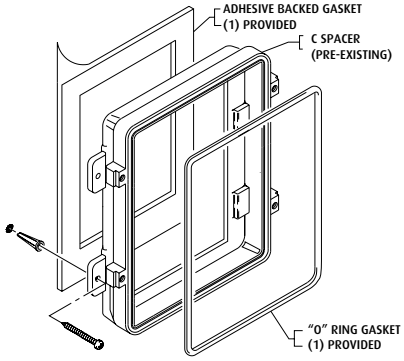

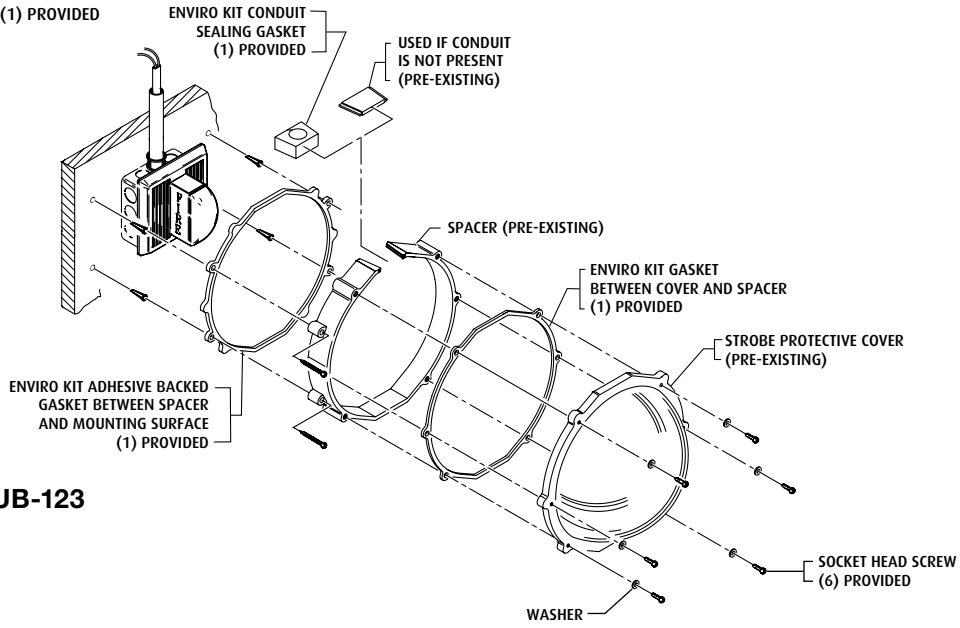

SUB-123

Safety Technology International, Inc.

2306 Airport Road
Waterford, Michigan
48327, USA

Tel: 248-673-9898
Fax: 248-673-1246
Toll-free: 800-888-4784
info@sti-usa.com
www.sti-usa.com

Unit 49G Pipers Road
Park Farm Industrial Estate
Redditch, Worcestershire
B98 OHU England

Tel: 44 (0) 1527 520 999
Fax: 44 (0) 1527 501 999
info@sti-europe.com
www.sti-europe.com

Printed in U.S.A., © 1987-2009 Safety Technology International, Inc.

Subject to change without notice. 08/15

RSN: ***1167880***
Permit #: ***2016-1214781-LT***

Simplex®

Fire Alarm System Accessories

UL, ULC, CSFM Listed;
*FM Approved**

RSG Electromagnetic Door Holders; Wall Mounted or Floor Mounted

Features

Electromagnetic door holders from RSG (Reliable Security Group) with four mounting types:

- Semi-flush wall mount for shallow box applications
- Surface wall mount with matching box
- Flush wall mount with recessed magnet for low profile applications
- Floor mount, for single or double doors

Multiple finish options:

- High luster plating of chrome, brass, or dark bronze
- Powdercoated in chrome or dark bronze

Low current, multi-voltage design reduces power supply and battery demands:

- Models are available for operation with 24 VDC, 24 VAC, or 120 VAC
- Internal full wave rectifier allows AC or DC operation and provides switching transient suppression
- Low residual magnetism allows easy door release for compatibility with low pressure door closers
- Rated holding force ranges from 20 lbs (9 kg) minimum; to up to 110 lbs (49.8 kg)

Quick and easy installation:

- Self-adjusting swivel catch plate adjusts to door alignment changes
- Adhesive mounting templates assure alignment
- Required mounting hardware is supplied with each door holder
- Magnet catch plates can be screwed to wooden doors or drilled through and attached to a mounting bracket
- Floor mount door holders include drills and anchors for mounting to concrete floors and hardware for mounting to wooden floors
- Front plates provide convenient grounding screw location

Optional accessories:

- Extension rods are available in multiple lengths to allow proper alignment, including a 4” (102 mm) long pivoting rod
- Drilling fixture for accurate repetitive installation

UL listed to Standard 228

Description

Door holders are normally energized to magnetically hold doors open. In the event of a fire emergency, the fire alarm control panel or other compatible control means will release the magnet allowing the door to close to prevent the spread of smoke. Doors may be manually closed or opened when the door holder is energized.

Product Reference Images
(shown without screw hole caps in place)

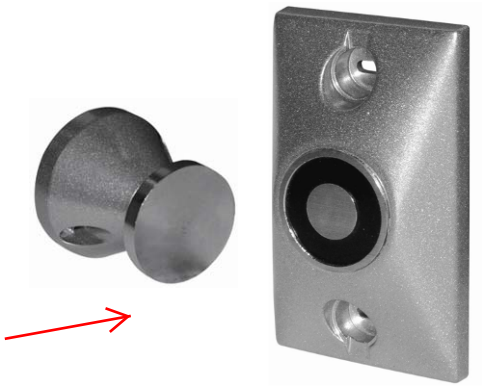

Semi-Flush Wall Mount Door Holder Magnet and Catch Plate Assembly

Surface Wall Mount Door Holder Magnet with Supplied Box

Floor Mount Door Holder Magnet with Supplied Bracket and Box
(Single door model shown, available for double doors)

* These products have been approved by the California State Fire Marshal (CSFM) pursuant to Section 13144.1 of the California Health and Safety Code. See CSFM Listing 3550-1039:0100 for allowable values and/or conditions concerning material presented in this document. It is subject to re-examination, revision, and possible cancellation. Additional listings may be applicable, contact your local Simplex® product supplier for the latest status. Listings and approvals are under RSG, Reliable Security Group.

RSN: ***1167880***
Permit #: ***2016-1214781-LT***

Product Selection (see specifications on page 4 and part number selection below)

Mounting Type	Hardware Included	Electrical Box Requirement
Semi-flush Mount (partially recessed magnet)	Magnet assembly, catch plate with bracket, screw hole caps, and required mounting hardware	Single gang box, 1 ½" deep minimum (supplied separately)
Flush Mount (fully recessed magnet)	Magnet assembly, catch plate with bracket, screw hole caps, and required mounting hardware (not shown on page 1, refer to illustration on page 3)	Single gang box, 2 ¼" deep minimum (supplied separately)
Surface Mount	Magnet assembly, catch plate with bracket, screw hole caps, matching electrical box, and required mounting hardware	Box is supplied with door holder: 4 ¾" H x 2 ¾" W x 1 ½" D (117 mm x 70 mm x 54 mm)
Floor (ground) Mount for single door with single magnet	Magnet assembly with electrical box, catch plate with bracket, floor mounting bracket, screw hole caps, and required mounting hardware including drills and anchors for concrete floors	
Floor (ground) Mount for double door with double magnets	Two surface mount magnet assemblies with electrical box, each with electrical box; two catch plates with brackets, screw hole caps, and required mounting hardware including drills and anchors for concrete floors	

Optional Door Holder Accessories

Model		Description	
Powdercoat Chrome	Brass		
DHE1PC	DHE1B	Catch plate extender rod, 1" (25.4 mm) long	Each extender rod includes two DHW extension wrenches
DHE1.5PC	DHE1.5B	Catch plate extender rod, 1 ½ " (38 mm) long	
DHE2PC	DHE2B	Catch plate extender rod, 2" (51 mm) long	
DHE3PC	DHE3B	Catch plate extender rod, 3" (76 mm) long	
DHE4APC	DHE4AB	Catch plate with adjustable extender rod, 4" (102 mm) long with center pivot	

Model	Description
DHDF	Drilling Fixture, provides convenient alignment for repetitive installation
DHW	Extension Wrench for adding extender rod to catch plate (two are needed, two are shipped with each extension)

Door Holder Part Number Selection

Select from each of the 6 categories to create part number (see examples below)

1	2		3		4		5		6	
Door Holder	**Operating Voltages**		**Mounting Style**		**Finish Type**		**Finish Color**		**Floor Mount Coils**	
Select	***Select***	**For**	***Select***	**For**	***Select***	**For**	***Select***	**For**	***Select***	**For**
DH	**1224**	12 VDC 12 VAC 24 VDC 24 VAC	**S**	Surface Mount	**P**	Powdercoated	**C**	Chrome	**1**	Single door
	24120	24 VDC 24 VAC 120 VAC	**F**	Semi-Flush Mount			**B**	Brass	**2**	Double door
	24220	24 VDC 24 VAC 220 VAC	**G**	Floor (Ground) Mount	**blank**	High luster plated	**DBR**	Dark Bronze	**blank**	Not floor mounted
			R	Flush Mount (Recessed Magnet)						

Examples:

1. **DH24120RPC**: Door holder; 24 VDC/VAC, or 120 VAC operation; Recessed magnet/flush mount; Powdercoated; Chrome finish
2. **DH24120GB2:** Door holder; 24 VDC/VAC, or 120 VAC operation; Ground/floor mount; Brass finish, high luster; Double door
3. **DH1224SPC:** Door holder; 12 or 24 VDC/VAC operation; Surface mount; Powdercoated; Chrome finish

RSN: ***1167880***
Permit #: ***2016-1214781-LT***

Semi-Flush and Surface Mount Dimensions

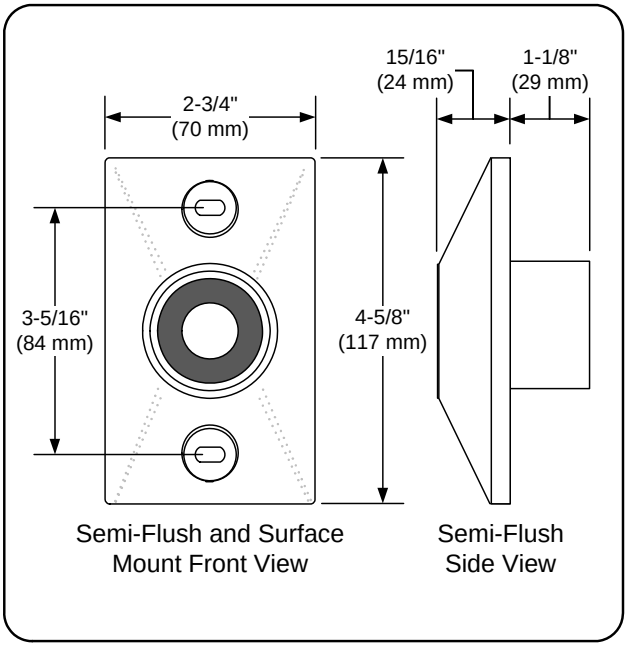

Semi-Flush and Surface Mount Front View

Semi-Flush Side View

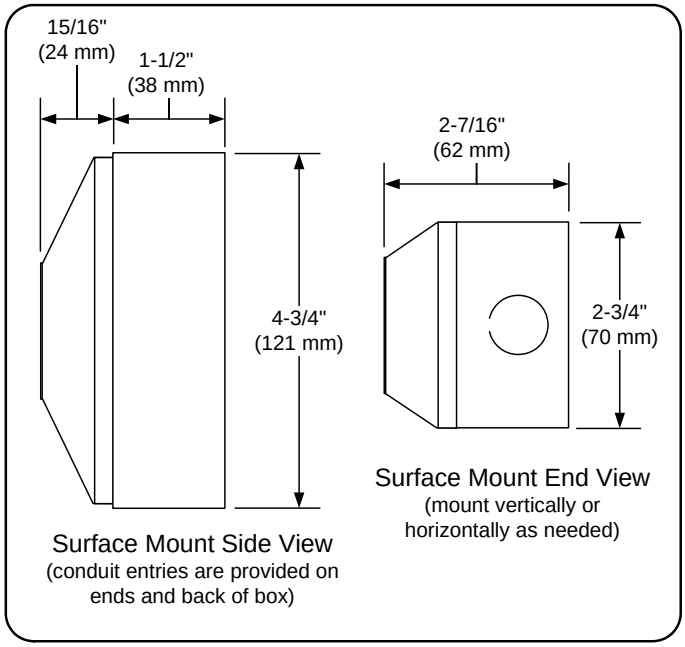

Surface Mount Side View
(conduit entries are provided on ends and back of box)

Surface Mount End View
(mount vertically or horizontally as needed)

Flush and Floor Mount Dimensions

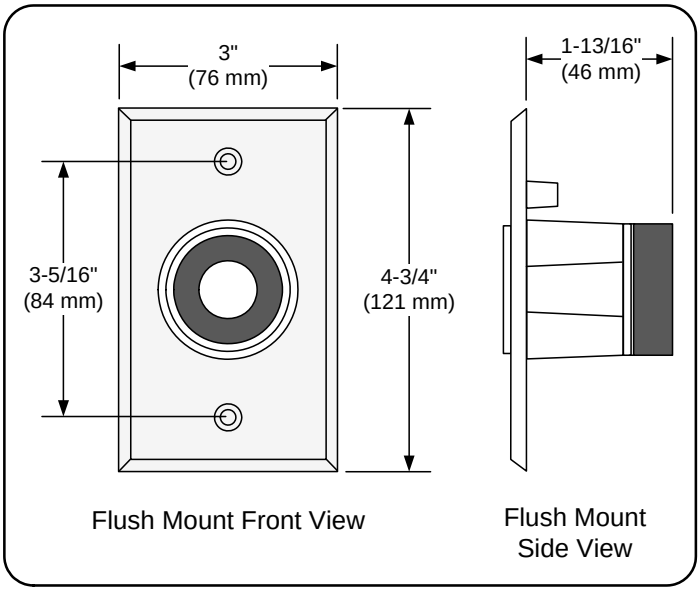

Flush Mount Front View

Flush Mount Side View

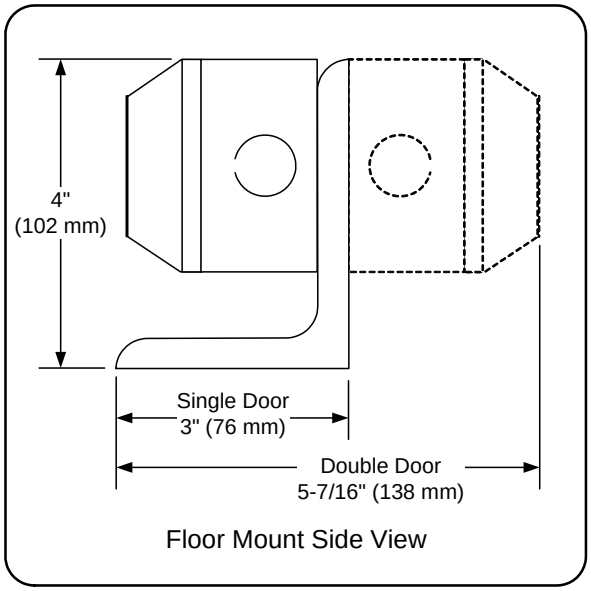

Floor Mount Side View

RSN: ***1167880***
Permit #: ***2016-1214781-LT***

Catch Plate and Mounting Bracket Dimensions

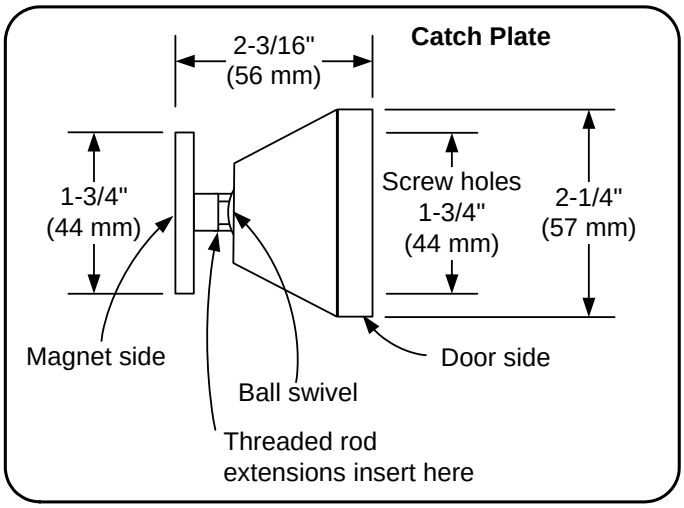

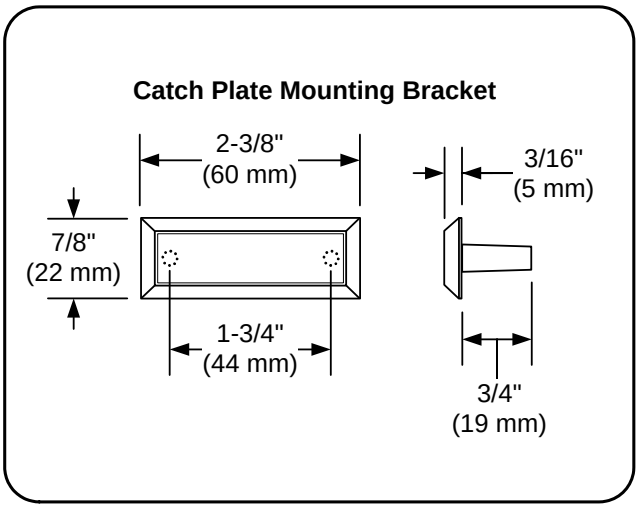

Specifications

Mechanical Specifications

Material	Durable die-cast metal
Wiring Connections	Three position terminal block with provisions for in/out wiring; common (C), low voltage, high voltage); 22 to 12 AWG (0.5 to 3.31 mm^2)

Electrical Specifications and Performance

Model	Voltage	Current DC	Current AC	Terminals	Holding
1224	12 V	40 mA	38 mA	C & L	30 lbs (13.6 kg)
	24 V	40 mA	36 mA	C & H	
1224 High Holding Force	24 V	85 mA	81 mA	C & L	75 lbs (34 kg)
24120	24 V	20 mA	19 mA	C & L	40 lbs (18.1 kg)
	120 VAC	–	20 mA	C & H	35 lbs (15.8 kg)
24120 High Holding Force	120 VAC	–	100 mA	C & L	110 lbs (49.8 kg)
24220	24 V	20 mA	19 mA	C & L	20 lbs (9 kg)
	220 VAC	–	15 mA	C & H	22 lbs (9.8 kg)

For additional information, visit the RSG website: http://www.rsgsecurity.com/

TYCO, SIMPLEX, and the product names listed in this material are marks and/or registered marks. Unauthorized use is strictly prohibited.

© 2012 Tyco Fire Protection Products. All rights reserved. All specifications and other information shown were current as of document revision date and are subject to change without notice.

RSN: *1167880*
Permit #: *2016-1214781-LT*

Simplex®

Fire Alarm Control Panel Accessories

*Listings**

System Batteries, Sealed Lead-Acid; with Applications Reference for Battery Cabinets, and Battery Cabinets with Charger

Features

Rechargeable, sealed lead-acid batteries:

- Lead-calcium grid structure with immobilized electrolyte in absorbent separator
- Low maintenance with no need to add water
- Low self-discharge characteristics
- One-piece, high impact polystyrene cell cover with high reliability dual seal construction
- UL 924 recognized pressure relief valves

Available in a variety of capacities:

- Batteries for internal mounting range from 6.2 Ah up to 50 Ah, depending on control panel cabinet size
- Larger batteries, up to 110 Ah, mount in external battery cabinets with models available with internal chargers

Battery cabinets with chargers:

- Battery cabinets with charger communicate with their connected fire alarm control panel and are available for 4100ES/4010ES/4100U Series and 4010 Series panels

Description

Simplex® rechargeable sealed-lead acid batteries provide reliable and repeatable discharge and recharge characteristics for use in fire alarm and other systems applications. They are designed with immobilized electrolyte in an absorbent separator, allowing them to provide rated capacity on the first cycle.

Because of their sealed construction, packaging is allowed within the system electronics enclosure (see illustration on page 2). When this is applicable, the quantity of system cabinets and the battery wiring distances are both minimized. Where required, external battery cabinets can be close-nippled to the control panel to house larger batteries with battery chargers available in some battery cabinet sizes.

Battery Details

Charging. These batteries are intended to be used with compatible Simplex battery chargers.

Series Connections. These batteries are required to be connected in series to produce 24 V system voltage. Battery sets must be of identical voltage, model number, appearance, and approximately the same date of manufacture for proper operation.

Testing. Battery capacity testing is recommended to be performed by using a sealed lead-acid battery tester designed to withdraw a minimum of battery charge. The preferred tester applies a variety of amplitude and duration controlled test pulses that compares terminal voltage against those predicted for the specific battery size. (Testing is available through your local Simplex product supplier.)

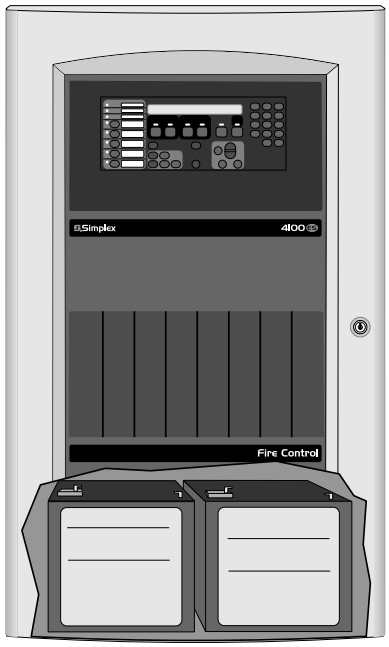

Compatible Sealed Lead-Acid Batteries can be Installed Inside Fire Alarm Control Panel Cabinets

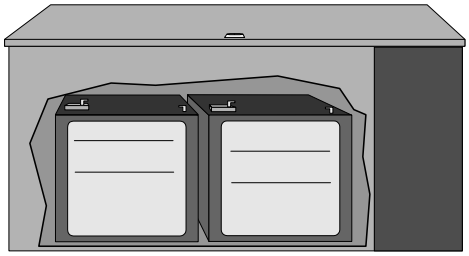

Remote Battery Cabinets are Available for Larger Battery Requirements

Battery Details *(Continued)*

Shipping. Sealed lead-acid batteries are shipped via ground or sea transportation only. They are not shipped via air.

Disposal. Battery chemicals and materials can be recycled. Refer to information shipped with the battery or on its case. Return to the battery manufacturer or to a similarly qualified battery processing facility for proper disposal.

Seismic Activity Applications. Battery brackets are available for systems tested for compliance with specific batteries. Please refer to data sheet S2081-0019 for details.

* Refer to details on page 4 and to the referenced individual product data sheets for agency listing status of battery cabinets and chargers. The batteries detailed in this document meet the requirements of UL, ULC, and Factory Mutual for use with respective equipment battery chargers as listed on page 3. Contact your local Simplex product supplier for proper battery selection per system requirements. Listings and approvals under Simplex Time Recorder Co. are the property of Tyco Fire Protection Products.

Battery Construction Reference

Actual appearance will vary with battery size.

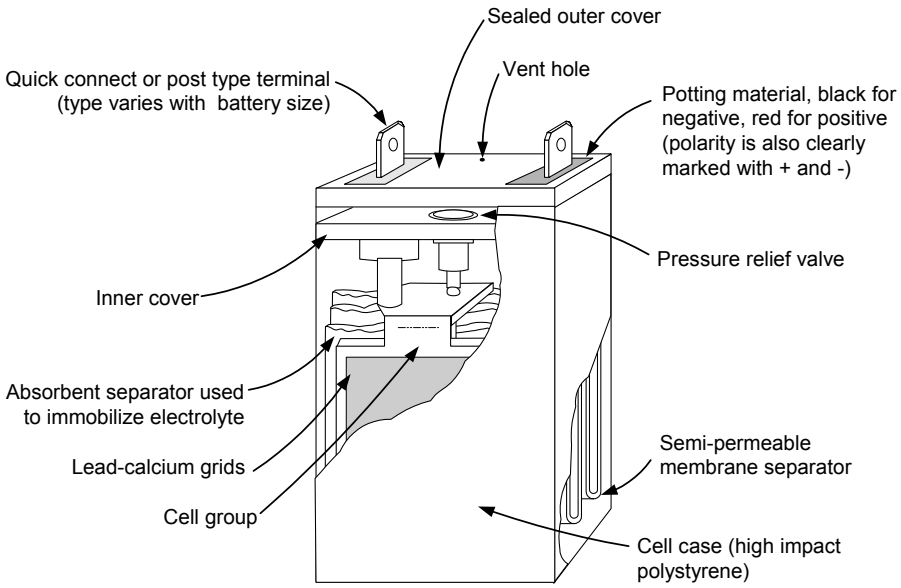

Battery Size Specifications

Battery Model	Capacity @ 20 Hour Discharge Rate	Width*	Depth*	Height with Terminals	Approximate Weight*
2081-9272	**6.2 Ah**	6-1/8” (156 mm)	2-5/8” (67 mm)	4” (102 mm)	5.75 lbs (2.6 kg)
2081-9274	**10 Ah**	6” (153 mm)	4-1/16” (103 mm)	4” (102 mm)	9.2 lbs (4.2 kg)
2081-9288	**12.7 Ah**	6” (153 mm)	4” (102 mm)	4” (102 mm)	9 lbs (4.1 kg)
2081-9275	**18 Ah**	7-1/4” (184 mm)	3-3/8” (86 mm)	6-5/8” (168 mm)	14.3 lbs (6.5 kg)
2081-9287	**25 Ah**	6-5/8” (168 mm)	5” (127 mm)	7” (178 mm)	19.4 lbs (8.8 kg)
2081-9271 (rectangular case, typically for service)	**33 Ah**	12-1/2” (318 mm)	3-3/8” (86 mm)	7-1/16” (179 mm)	26.6 lbs (12.1 kg)
2081-9276 (“square” case, use for new)	**33 Ah**	7-3/4” (197 mm)	5-1/4” (133 mm)	6-3/4” (171 mm)	26.5 lbs (12 kg)
2081-9296	**50 Ah**	9” (229 mm)	5-1/2” (140 mm)	8-7/8” (225 mm)	41.8 lbs (19 kg)
2081-9279	**110 Ah**	11-3/16” (284 mm)	10-1/2” (267 mm)	9” (230 mm)	82 Lbs (37 kg)

* Dimensions and weight are per battery and are for reference only. Exact size may vary. Refer to the tables on page 3 for mounting compatibility. These batteries are 12 V each and series connected for 24 V system use.

NOTE: When wired in series for 24 V output, these batteries are to be of identical voltage, appearance, model number, and approximately the same date of manufacture.

General Battery Specifications

Nominal Voltage Rating	12 Volts per battery
Discharge Rating	20 Hour Rate
Typical Charge/Discharge Cycles	100 to 150
Preferred Charge Temperature Range	60° F to 90° F (15.6°C to 32.2° C)

Battery Compatibility for Fire Alarm Control Panel Mounting

NOTE: Refer to individual fire alarm control panel product data sheets for additional battery application information

Battery Model	Capacity	Simplex Control Panel Model Series (see legend and notes below)								
		4003EC	4004R	4007ES & 4005	4006 & 4008	4009 (all models)	4010	4010ES	4100ES/ 4100U	4100 & 4120 (2, 4 or 6-Unit)
2081-9272	6.2 Ah	✓	✓	✓	✓	✓	✓	✓	✓	✓
2081-9274	10 Ah	✓	✓	✓	✓	✓	✓	✓	✓	✓
2081-9288	12.7 Ah	✓	✓	✓	✓	✓	✓	✓	✓	✓
2081-9275	18 Ah	**Ext**	Note 3	✓	**Ext**	**Ext**	Note 2	✓	✓	✓
2081-9287	25 Ah	**Ext**	Note 3	**Ext**	**Ext**	**NA**	✓	✓	✓	✓
2081-9271 rectangular	33 Ah	**Ext**	Note 3	**Ext**	**NA**	**NA**	Note 3	✓	✓	**Ext**
2081-9276 "square"	33 Ah	**Ext**	Note 3	**NA**	**NA**	**NA**	Note 3	✓	✓	✓
2081-9296	50 Ah	**NA**	Note 3	**NA**	**NA**	**NA**	Note 3	Note 6	**2 or 3 bay**	**Ext**
2081-9279	110 Ah	Requires external battery cabinet, compatible with 4100ES, 4010ES, 4100, and 4120 Series only								

✓ **=** Can be placed in the respective equipment cabinet

Ext = External battery cabinet is required, refer to selection chart on page 4

NA = Not applicable/not compatible

NOTES:

1. These batteries meet the requirements of UL, ULC, and Factory Mutual for use with respective equipment battery chargers listed above. Contact your local Simplex product supplier for proper battery selection per system requirements.
2. 4010 Cabinets will accommodate 2081-9275, 18 Ah batteries, but will not allow bottom entry conduit.
3. Use 4081 series companion cabinet and charger, refer to page 4.
4. Some control panel models are listed for battery replacement reference only.
5. For 2 bay international applications only, 50 Ah batteries will fit in the cabinet.

External Battery Cabinet Compatibility Reference

Battery Cabinets without Chargers (connects to charger in panel)

Cabinet	Panel Compatibility	Battery					
		2081-9275 18 Ah*	2081-9287 25 Ah	2081-9271 Rectangular 33 Ah	2081-9276 Square 33 Ah	2081-9296 50 Ah	2081-9279 110 Ah
2081-9280	4100ES, 4010ES, 4100U, and 4100+	**NA**	**NA**	**NA**	**NA**	**NA**	✓
2081-9281 2081-9282	multiple	✓	✓	✓	✓	✓	**NA**
4009-9801	multiple	✓	✓**	**NA**	**NA**	**NA**	**NA**
4009-9802	multiple	✓	**NA**	✓	**NA**	**NA**	**NA**

Battery Cabinets with Chargers

Cabinet	Panel Compatibility	2081-9275 18 Ah*	2081-9287 25 Ah	2081-9271 Rectangular 33 Ah	2081-9276 Square 33 Ah	2081-9296 50 Ah	2081-9279 110 Ah
4081-9301 4081-9302	4004R and 4010	✓	✓	✓	✓	✓	**NA**
4081-9306 4081-9308	4100ES, 4010ES, and 4100U	**NA**	**NA**	**NA**	**NA**	✓	✓

* Batteries smaller than those listed are normally mounted in the product cabinet

** 25 Ah capacity was effective as of 7/2005.

✓ = Can be placed in the respective equipment cabinet

NA = Not applicable/not compatible

RSN: ***1167880***
Permit #: ***2016-1214781-LT***

External Battery Cabinet Specification Reference

Battery Cabinets Without Chargers; Shallow Design with Front Door

Model	Color	Listings	Description		Dimensions
2081-9281	Beige	UL and FM	2-Unit, 4100 style cabinet **without** charger; with locking solid door and battery shelf, primarily for use with 50 Ah batteries		25-3/4" W x 20-3/4" H x 6-3/4" D (654 mm x 527 mm x 171 mm)
2081-9282	Red				
4003-9860	Beige	Multiple	Intended for use with 4003EC systems, for up to 33 Ah batteries (refer to 4003EC data sheet S4003-0002)		9-1/2" H x 24" W x 9" D (241 mm x 610 mm x 229 mm)
4009-9801*	Beige	UL and FM	For up to 25 Ah batteries*	External battery cabinet **without** charger, with locking solid door and battery harness; for close-nippled mounting to fire alarm control panel cabinet	16-1/4" W x 13-1/2" H x 5-3/4" D (413 mm x 343 mm x 146 mm)*
4009-9802	Beige	UL	For up to 33 Ah batteries		25-3/4" W x 20-3/4" H x 4-1/8" D (654 mm x 527 mm x 105 mm)

* Depth increased for 25 Ah batteries effective 7/2005.

Chargers for use with 4010 Fire Alarm Control Panels and 4004R Suppression Release Systems

(refer to data sheet S4081-0001)

Model	Color	Input Voltage	Description	Dimensions
4081-9301	Beige	120 VAC	Battery cabinet **with** charger for the 4010 and 4004R fire alarm control panel; **for up to 50 Ah batteries**; with front door *Listings include: UL, ULC, FM, CSFM, and MEA (NYC), see data sheet for details*	22-1/2" W x16-3/4" H x 8-3/8" D (572 mm x 425 mm x 213 mm)
4081-9302	Red			

Battery Cabinet Without Charger for 110 Ah Batteries; for use with compatible panel mounted chargers

(refer to data sheet S2081-0012)

Model & Listings	Color	Cabinet Description	Compatible Chargers	Charger Description	Dimensions
2081-9280 *Listings include: UL and CSFM*	Red	Battery cabinet for 2081-9279, 110 Ah batteries; includes 80 A battery fuse, terminals and battery connection cables; see data sheet for details	4010-9xxx Series	4010ES Main System Supply (MSS)	26-1/2" W x 12" H x 12" D (673 mm x 305 mm x 305 mm)
			4100-9xxx Series	4100ES/4100U System Power Supplies (SPS)	
			4100-5111 4100-5112 4100-5113	4100ES/4100U Additional SPS	
			4100-5125 4100-5126 4100-5127	4100ES/4100U Remote Power Supply (RPS)	
			4100-5120 4100-5121 4100-5122	4100ES/4100U TrueAlert Addressable Power Supply (TPS)	
			4100-0104 4100-0114 4100-0124	4100 Legacy power supplies	

4100ES/4010ES/4100U Compatible Battery Cabinet With Charger for 110 Ah Batteries (for ULC listed systems and for other applications unable to use panel mounted power supply charger; *refer to data sheet S4081-0002*)

Model	Color	Input Voltage	Description	Dimensions
4081-9306	Red	120 VAC	Battery cabinet with charger for up to 110 Ah batteries; **NOTE:** Required for ULC listed charging of 110 Ah batteries*; Listings include: UL, ULC, FM, CSFM, and MEA (NYC), see data sheet for details*	27-7/8" W x 13-1/2" H x 14-5/8" D (708 mm x 343 mm x 371 mm)
4081-9308	Red	220/230/240 VAC, multi-tapped		
4100-9837	Green LED Power-on Indicator Kit, **required for ULC listing,** mounts above access panel using knockout provided			

TYCO, SIMPLEX, and the product names listed in this material are marks and/or registered marks. Unauthorized use is strictly prohibited.

© 2014 Tyco Fire Protection Products. All rights reserved. All specifications and other information shown were current as of document revision date and are subject to change without notice.