MEDICAL CENTER OF AURORA
SURGERY RENOVATIONS PHASES I-III FIRE ALARM SYSTEM

SITE

MEDICAL CENTER OF AURORA
1501 S POTOMAC STREET
AURORA, COLORADO 80012

ENGINEER OF RECORD

I.C. THOMASSON ASSOCIATES, INC
2950 KRAFT DRIVE, SUITE 500
NASHVILLE, TN 37204
PHONE: 614-346-3400

INSTALLER

LUDVIK ELECTRIC CO
3900 S TELLER STREET
LAKEWOOD, COLORADO 80235
PHONE: 303-781-9601

DRAWING INDEX

DWG#	DESCRIPTON
General Information (FA-000 Series)	
FA-001	COVER SHEET
2 1 FA-002	GENERAL INFORMATION
Floorplans (FA-100 Series)	
2 1 FA-101	PARTIAL 1ST FLOOR - DEVICE PLACEMENT PLAN
Risers (FA-200 Series)	
2 1 FA-201	PARTIAL 1ST FLOOR RISER DIAGRAM
Panel Details (FA-500 Series)	
FA-501	TRANSPONDER 3 - PANEL DETAIL
Calculations (FA-600 Series)	
2 1 FA-601	NODE 1 FACP - CALCULATIONS AND SCHEDULES
FA-602	NODE 1 FACP AND NAC1 - CALCULATIONS AND SCHEDULES
FA-603	NODE 1 TRANSPONDER 3 - CALCULATIONS AND SCHEDULES
Wiring Details (FA-700 Series)	
FA-701	WIRING TYPICALS
2 FA-702	WIRING TYPICALS
FA-703	WIRING TYPICALS

AURORA FIRE DEPARTMENT GENERAL NOTES

- FIRE ALARM SYSTEMS CANNOT BE COMBINED WITH BURGLAR ALARM SYSTEMS.
- THE INSTALLER IS REQUIRED TO COORDINATE WITH THE MECHANICAL CONTRACTOR TO DETERMINE INSTALLATION OF SMOKE DETECTORS OR SENSORS (i.e., NOT CLOSER THAN 3 FEET FROM ANY SUPPLY/RETURN DIFFUSER AND THAT ADDITIONAL DETECTION MAY BE REQUIRED DUE TO THE RELOCATION OR SPACING ADJUSTMENT OF DETECTORS, AS A RESULT).
- FIRE ALARM DEVICES MUST BE PLACED IN PROTECTED AREAS WITH AMBIENT TEMPERATURE RANGING FROM 32 DEGREES TO 120 DEGREES F.
- DO NOT PLACE SMOKE DETECTORS WITHIN 3 FEET OF AIR SUPPLY REGISTERS AND DIFFUSERS.
- FIRE ALARM SYSTEM SHALL BE MONITORED BY A CLASS 1 CENTRAL STATION.
- FIRE ALARM CONTROL PANEL WILL BE PLACED IN THE LOCATION SPECIFIED WITHIN THE PLAN SUBMITTAL UNLESS APPROVED BY THE LIFE SAFETY FIELD INSPECTOR.
- CITY OF AURORA BUILDING CODES DIVISION DOES NOT GRANT APPROVAL FOR ANY VIOLATIONS OF ADOPTED FIRE CODE. CODE VIOLATIONS UNCOVERED DURING FIELD INSPECTIONS MUST BE CORRECTED.
- PER THE 2009 IFC AND THE 2011 NEC THE INSTALLER MUST REQUEST A ROUGH WIRING INSPECTION IN THE FIRE ALARM SYSTEM PRIOR TO REQUESTING A FIRE ALARM FINAL INSPECTION.
- THE CONTRACTOR SHALL CONDUCT A "PRE-TEST" OF THE PROJECT AREA PRIOR TO SCHEDULING AN ACCEPTANCE TEST WITH THE BUILDING CODES DIVISION.
- REMOTE ALARM INDICATORS SHALL BE PROVIDED FOR ANY AUTOMATIC FIRE ALARM DETECTOR LOCATED IN A CONCEALED LOCATION WITH A NORMALLY LOCKED DOOR.
- AT THE TIME OF FINAL FIRE ALARM INSPECTION, THE SYSTEM MUST BE SUPERVISED/MONITORED BY A CLASS 1 CENTRAL MONITORING AGENCY.
- THE INSTALLING CONTRACTOR (OR DESIGNEE) MUST PROVIDE ALL NECESSARY TESTING EQUIPMENT AND PERFORM ALL TESTING REQUIRED BY THE LIFE SAFETY FIELD INSPECTOR.
- IN-DUCT SMOKE DETECTORS INSTALLED IN CONCEALED LOCATIONS OR, WHERE THE DETECTOR'S ALARM INDICATOR IS NOT READILY VISIBLE TO RESPONDING PERSONNEL SHALL BE PROVIDED WITH A REMOTE INDICATOR(S), REMOTE TEST STATION AND PLACARDING.
- ALL NEW OR EXISTING FIRE ALARM SYSTEMS MUST BE CONNECTED ANY EXTERIOR HORN AND STROBE APPLIANCE. IF THE BUILDING IS FIRE SPRINKLED, A GENERAL ALARM ACTIVATION AT THE FIRE ALARM CONTROL PANEL WILL ACTIVATE THE EXTERIOR HORN AND STROBE. SILENCING THE PANEL MUST ALLOW THE VISUAL DEVICE TO CONTINUE UNTIL THE PANEL IS RESET.
- FIRE ALARM SYSTEMS SHALL INCLUDE BOTH AUDIBLE AND VISUAL ALARMS. VISUAL ALARMS WILL BE REQUIRED IN ALL ACCESSIBLE PUBLIC AND COMMON-USE AREAS PER THE 2009 IFC AND THE 2003 ANSI A117.1 STANDARD.
- PROVIDE A PRIMARY AND SECONDARY POWER SUPPLY FOR THE FIRE ALARM SYSTEM PER THE 2009 IFC, SECTION 907.5 AND THE 2007 NFPA 72.
- FIELD INSPECTION CONSULTATION IS AVAILABLE UPON REQUEST. CALL 303-739-7420 TO REQUEST CONSULTATION.
- THE FIRE ALARM CONTRACTOR MUST COMPLETE THE NFPA72 "RECORD OF COMPLETION" PRIOR TO SCHEDULING THE AHJ ACCEPTANCE TEST.
- AUDIBLE ALARM SIGNALING DEVICES SHALL EXCEED THE PREVAILING SOUND LEVEL IN A ROOM OR SPACE BY 15 DBA. SOUND LEVELS FOR ALARM SIGNALS SHALL BE 120 DBA MAXIMUM. 2009 IFC SECTION 907.10.2.

CENTRAL STATION MONITORING SERVICE:

SIMPLEXGRINNELL
50 TECHNOLOGY DRIVE
WESTMINSTER, MA 01441
1 (888) 746-7539

NICET CERTIFICATION

TECHNICAL AREA 00303: LEVEL 3
CERTIFICATE #: 93727
VALID THROUGH: 03/01/18

THIS DRAWING SET WAS PREPARED UNDER THE SUPERVISION OF A NICET III PROFESSIONAL. THE DRAWINGS WERE REVIEWED FOR THE INFORMATION CONTAINED UNDER THE SCOPE OF WORK. ALL EQUIPMENT HAS BEEN VERIFIED TO BE COMPATIBLE AND WILL OPERATE AS REQUIRED PER NFPA GUIDELINES.

NANCY S. WILTSIE — DATE 10/13/15

tyco SimplexGrinnell

Safer. Smarter. Tyco.™

PROJECT MANAGER
JANE LARNED
MOBILE : 720-284-2604
JLARNED@SIMPLEXGRINNELL.COM

6240 SMITH ROAD
DENVER, CO 80216

PHONE: 303-355-0500
SERVICE: 303-355-0500
FAX: 303-355-0615

Revising Permit # 2015-967545-LT

Only highlighted or clouded revisions are approved on this review. All previous comments apply.

City of Aurora Building Division
Reviewed for Code Compliance
Approved as Noted: John J Van Essen
Date: Dec 01, 2015
2009 INTERNATIONAL CODES & 2014 NEC

RSN: 1064674
Permit #2015-1026387-LT

tyco SimplexGrinnell
Safer. Smarter. Tyco.™
DISTRICT - 419
6240 SMITH ROAD
DENVER, CO 80216
SERVICE: 303-355-0500
PHONE: 303-355-0500
FAX: 303-355-0615

MEDICAL CENTER OF AURORA
SURGERY RENOVATIONS PHASES I-III
MEDICAL CENTER OF AURORA
1501 S POTOMAC STREET
AURORA, COLORADO 80012

Revisions shown with Δ symbol

ISSUE LOG:

MARK	DATE	CAD	CHK	DESCRIPTION
1	5/22/15	CPM	NSW	REV2 AND REV3 MODIFICATIONS
2	8/26/15	NSW	NSW	FSD CONTROL

DRAWN BY:	C. P. MADDEN
CHECKED BY:	N. S. WILTSIE
ISSUE DATE:	4/27/15
JOB #:	419435597
PROJECT #:	419:982434501
SIMPLEXGRINNELL ©	2015
SYSTEM:	FIRE ALARM SYSTEM
SHEET:	COVER SHEET

FA-001

IMPORTANT NOTICE TO USERS: the ownership or using this drawing grants the information contained hereto, the user agrees to the following terms and conditions: The electronic information on this drawing may be subject to intentional or unintentional alteration. Any use, reuse, copying modification or alteration of this information contained hereon shall be at the user's sole risk. User shall, to the fullest extent permitted by law, defend, indemnify, and hold SimplexGrinnell harmless from any and all claims for loss, damage or injury arising directly or indirectly therefrom. Files by the user or any third party and such use will be a user's sole risk. User shall, to the fullest extent permitted by law, defend, indemnify, and hold SimplexGrinnell harmless from any and all claims for loss, damage or injury arising directly or indirectly therefrom. This drawing shall be the sole work of the user. This information may not be sold or transferred to any third party, used on other projects or additions to this project for which it was prepared, or used for completion of this project by any third party. SimplexGrinnell disclaims all liability for the use or reuse of altered

FILE PATH: G:\Medical Center of Aurora\1501 S Potomac - Aurora South\South Tower - Node 1\20-MCOA Surgery Renovations FAS-2015-982434501\FIRE\Phase 1-3\FA-001.dwg
LAST SAVED BY: CMADDEN
LAST PRINTED: 8/24/2015 12:58:45 PM
24" x 36" - Arch D Size

FILE PATH: G:\Medical Center of Aurora\1501 S Potomac - Aurora South\South Tower - Node 1\20-MCOA Surgery Renovations FAS-2015-982434501\FIRE\Phase 1-3\FA-002.dwg

LAST SAVED BY: CMADDEN

LAST PRINTED: 8/24/2015 12:58:50 PM

24" x 36" - Arch D Size

GENERAL NOTES

1. THESE DRAWINGS DEPICT GENERAL LOCATIONS OF LIFE SAFETY EQUIPMENT & FIELD DEVICES. EXACT ROUTING OF CONDUITS TO BE DETERMINED IN THE FIELD BY THE INSTALLING CONTRACTOR TO SUIT CONDITIONS. ALL CHANGES SHALL BE CLEARLY INDICATED ON THE RECORD DRAWINGS.
2. SHOULD ANY CONDITIONS EXIST THAT DIFFER FROM WHAT IS INDICATED ON THESE DRAWINGS WHICH CAUSE MAJOR DEVIATIONS IN THE WORK SHOWN, THE CONTRACTOR SHALL CONTACT SIMPLEXGRINNELL IN A TIMELY MANNER SO AS NOT TO IMPAIR THE CONSTRUCTION SCHEDULE.
3. CONTRACTOR IS RESPONSIBLE FOR MAKING AND OBTAINING APPROVAL FOR ALL NECESSARY ADJUSTMENTS IN CIRCUITING AS REQUIRED TO ACCOMMODATE THE RELOCATION OF EQUIPMENT AND/OR DEVICES WHICH ARE AFFECTED BY ANY AUTHORIZED CHANGE. ALL CHANGES SHALL BE CLEARLY INDICATED ON THE RECORD DRAWINGS.
4. A STAMPED SET OF APPROVED FIRE ALARM DRAWINGS SHALL BE AT THE JOB SITE AND SHALL BE USED FOR INSTALLATION.
5. THE POWER CIRCUIT TO THE FACP AND TO THE FIRE ALARM POWER SUPPLIES SHALL BE ON A DEDICATED 120V, 20A BRANCH CIRCUIT BREAKER, AND SHALL HAVE A RED MARKING, LOCK-ON PROVISION AND SHALL BE IDENTIFIED AS "FIRE ALARM CIRCUIT CONTROL." THE LOCATION OF THE CIRCUIT DISCONNECT MEANS (CIRCUIT BREAKER) SHALL BE PERMANENTLY IDENTIFIED AT THE FIRE ALARM CONTROL UNIT.
6. UPDATE THE AS-BUILT DRAWING SET DAILY WITH JOB PROGRESS. RETURN THE AS-BUILT DRAWING SET TO SIMPLEXGRINNELL NO LATER THAN 7 DAYS AFTER FINAL TEST.
7. THE CONTRACTOR WILL MAINTAIN ALL AREAS OF THE BUILDING IN A NEAT AND WORKMAN LIKE MANNER.
8. DO NOT APPLY POWER EXCEPT IN THE PRESENCE OF A FACTORY TRAINED SIMPLEXGRINNELL TECHNICAL REPRESENTATIVE.
9. ANY SMOKE DETECTOR HEAD INSTALLED BEFORE THE BUILDING IS CLEANED AND ACCEPTED SHALL BE COVERED TO PROTECT FROM DUST. ANY FALSE ALARMS DUE TO DIRT CONTAMINATED HEADS SHALL BE THE RESPONSIBILITY OF THE FIRE ALARM INSTALLER.
10. THE FIRE ALARM INSTALLER WILL MAINTAIN THE FIRE RESISTANCE INTEGRITY OF ALL WALL, CEILING, AND ROOF ASSEMBLIES ANY TIME THAT WORK IS NOT ACTIVELY BEING PERFORMED.
11. INSTALLATION OF DEVICES SHALL BE IN ACCORDANCE WITH MANUFACTURER'S INSTRUCTIONS. POWER LIMITED AND NON-POWER LIMITED FIELD WIRING MUST BE INSTALLED WITHIN THE FACP ENCLOSURE IN ACCORDANCE WITH MANUFACTURER'S INSTRUCTIONS AND NEC.
12. ALL WIRING SHALL BE INSTALLED ACCORDING TO NFPA 70 (NEC).
13. FIRE ALARM CIRCUITS SHALL BE IDENTIFIED IN ACCORDANCE WITH APPROPRIATE SECTION OF NEC 760. MARK ALL FIRE ALARM WIRES IN ACCORDANCE WITH NEC 760 SECTIONS FOR POWER LIMITED AND NON-POWER LIMITED WIRE.
14 FIRE ALARM CABLE INSTALLED IN DUCTS, PLENUM, AND OTHER SPACES USED FOR ENVIRONMENTAL AIR SHALL BE TYPE FPLP.
15. FIRE ALARM CABLE INSTALLED IN THE VERTICAL RUNS AND PENETRATE MORE THAN ONE FLOOR OR CABLES INSTALLED IN VERTICAL RUNS IN SHAFTS SHALL BE TYPE FPLR.
16. FIRE ALARM CABLE INSTALLED IN UNDERGROUND CONDUIT OR OTHER WET LOCATIONS SHALL BE UL LISTED FOR WET LOCATIONS.
17. FIRE ALARM CIRCUITS EXTENDING BEYOND ONE BUILDING AND RUN OUTDOOR SHALL BE INSTALLED IN ACCORDANCE WITH NFPA 70 ARTICLES 760, 770, 725 AND 800 WHERE APPLICABLE.
18. ALL WIRING, INCLUDING SHIELDS MUST BE DRY AND FREE OF SHORTS AND GROUNDS.
19. ALL SHIELDED WIRE MUST HAVE SHIELD CONTINUITY AT FULL LENGTH OF THE WIRE.
20. ONLY SYSTEM WIRING CAN BE RUN IN THE SAME CONDUIT.
21. 120VAC IS NOT PERMITTED IN THE SAME CONDUIT WITH LOW VOLTAGE WIRING.
22. MAINTAIN 40 PERCENT CONDUIT FILL RATIO AS PER NEC REQUIREMENTS.
23. EXISTING CONDUITS MAY BE USED BY THE INSTALLATION CONTRACTOR AS DEEMED NECESSARY, HOWEVER, ANY EXISTING CONDUIT WILL BE USED ONLY IF CONDUITS MEET CURRENT STANDARDS AND CODES. SIMPLEXGRINNELL MAKES NO STATEMENTS WRITTEN OR VERBAL AS TO THE CONDITION OF EXISTING CONDUITS.

WIRE SCHEDULE

FIRE ALARM WIRE LIST

	CIRCUIT DESCRIPTION	RISER RATED: FPLR	SINGLE CONDUCTOR(THHN,TFFN)	PLENUM RATED: FPLP
A	ADDRESSABLE NOTIFICATION CIRCUIT 14 AWG SOLID UNSHIELDED TWISTED PAIR	SG ANIX./PAIGE 454718ARE AREA=0.0380 SQ. INCH ANIXTER PART NUMBER FA-1402C-1-1N-03-BX		SG ANIX./PAIGE 454719ARE AREA=0.0333 SQ. INCH ANIXTER PART NUMBER FA-1402C-1-2N-03
B	RUI+ COMMUNICATION 1 PAIR 18 AWG UNSHIELDED TWISTED (SUBSCRIPT "u" IF MIXED w/SHIELDED)	SG ANIX./PAIGE 454703ARE AREA=0.0204 SQ. INCH ANIXTER PART NUMBER FA-1802C-1-1N-03-BX		SG ANIX./PAIGE 740132R AREA=0.0141 SQ. INCH ANIXTER PART NUMBER FA-1802C-1-2N-03
K	REMOTE TEST SWITCH/ LED CIRCUIT - (2) 2 CONDUCTOR 18 AWG SOLID	SG ANIX./PAIGE 454703ARE AREA=0.0204 SQ. INCH ANIXTER PART NUMBER FA-1802C-1-1N-03-BX	(4) #18 AWG AREA=0.0055 SQ. INCH (EACH)	SG ANIX./PAIGE 740132R AREA=0.0141 SQ. INCH ANIXTER PART NUMBER FA-1802C-1-2N-03
M	MAPNET/IDNET CIRCUIT 1 PAIR 18 AWG TWISTED OVERALL SHIELD	SG ANIX./PAIGE 740215 AREA=0.0196 SQ. INCH ANIXTER PART NUMBER T740215		SG ANIX./PAIGE 740214L AREA=0.0196 SQ. INCH ANIXTER PART NUMBER FAMC-1802C-1-2S-03B5
P	POWER CIRCUIT 2 CONDUCTOR 14 AWG SOLID (SUBSCRIPT "r" IF RESETTABLE)	SG ANIX./PAIGE 454718ARE AREA=0.0380 SQ. INCH ANIXTER PART NUMBER FA-1402C-1-1N-03-BX	(2) #14 AWG AREA=0.0097 SQ. INCH (EACH)	SG ANIX./PAIGE 454719ARE AREA=0.0333 SQ. INCH ANIXTER PART NUMBER FA-1402C-1-2N-03
R	RELAY CIRCUIT 2 CONDUCTOR 14 AWG SOLID	SG ANIX./PAIGE 454718ARE AREA=0.0380 SQ. INCH ANIXTER PART NUMBER FA-1402C-1-1N-03-BX	(2) #14 AWG AREA=0.0097 SQ. INCH (EACH)	SG ANIX./PAIGE 454719ARE AREA=0.0333 SQ. INCH ANIXTER PART NUMBER FA-1402C-1-2N-03

CONDUIT SIZE	CONDUCTOR AREA	CONDUIT SIZE	CONDUCTOR AREA
1/2"	0.12 SQ INCH *	1-1/4"	0.60 SQ INCH *
3/4"	0.21 SQ INCH *	1-1/2"	0.82 SQ INCH *
1"	0.34 SQ INCH *	2"	1.34 SQ INCH *

* 40% FILL PER N.E.C.

THE CABLES SPECIFIED HERE ARE FOR REFERENCE OF REQUIRED ELECTRICAL CHARACTERISTICS AS WELL AS CODE REQUIREMENTS. ALTERNATE SUPPLIERS MAY BE SUBSTITUTED PROVIDING EQUIVALENT CHARACTERISTICS ARE MAINTAINED. ITEMS SUCH AS CAPACITANCE BETWEEN CONDUCTORS AND WIRE GAUGE CAN BE CRUCIAL TO THE CIRCUIT DESIGN OF THIS SYSTEM INSTALLATION.

REFERENCE https://www.anixter.com/customer/tycofs FOR SG ANIXTER CABLE DATA

SYSTEM DESCRIPTION / SCOPE OF WORK

OCCUPANCY TYPE: I-2 INSTITUTIONAL GROUP
TOTAL SQUARE FOOTAGE FOR ALL PHASES: 42,268 SF
SPRINKLER PROTECTION: BUILDING IS FULLY SPRINKLED

PROVIDE AND INSTALL A NEW AUTOMATIC AND MANUAL FIRE ALARM SYSTEM AS SHOWN ON DRAWINGS.

THIS IS A PARTIAL RENOVATION OF THE FIRST FLOOR OF THE HOSPITAL ENCOMPASSING NEW AND EXISTING OPERATING ROOMS AND RECOVERY AREAS. THE CONSTRUCTION WILL BE COMPLETED UNDER SEVEN PHASES. THIS SUBMITTAL PACKAGE IS FOR PHASES 1-3. THE EXISTING NODE 1 CONTROL PANEL WILL BE FIELD UPGRADED TO A 4100ES PANEL TO CONTROL THE NEW ADDRESSABLE NOTIFICATION AND AN ADDITIONAL BACKBOX IS PROVIDED FOR EXPANSION. BOTH EXISTING NODE 1 AND NODE 2 FIRE ALARM PANELS WILL BE PROVIDED WITH NEW NETWORK CARDS TO ALLOW FUTURE SYNCHRONIZATION ACROSS THE NETWORK.

A NEW REMOTE FIRE ALARM TRANSPONDER WITH NEW ADDRESSABLE IDNET AND NEW ADDRESSABLE IDNAC CIRCUITS WILL BE INSTALLED UNDER PHASE I OF THIS PROJECT. THE NEW TRANSPONDER WILL CONNECT TO THE EXISTING NODE 1 FIRE ALARM CONTROL PANEL. THE AREAS IN THE SCOPE OF WORK WILL BE FULLY DETECTED AND NEW PRIVATE MODE CHIME/STROBE AND STROBE ONLY DEVICES WILL BE INSTALLED. OPERATING ROOMS WILL RECEIVE NEW ADDRESSABLE WALL MOUNTED STROBES WITH RED LENS. THESE STROBES WILL ACTIVATE WHEN SMOKE IS DETECTED IN THE SMOKE COMPARTMENT. NEW CONTROL MODULES ARE PROVIDE TO NOTIFY THE DDC SYSTEM OF AN ALARM CONDITION IN THE AREA, SMOKE AT THE FANS OR FIRE/SMOKE DAMPERS AND SMOKE IN EACH OPERATING ROOM. ALL SMOKE CONTROL FOR THE OPERATING ROOMS WILL BE HANDLED BY THE BUILDING DDC.

ALL WIRING TO BE CLASS B. WIRING IS STYLE Y FOR NOTIFICATION APPLIANCE CIRCUITS, STYLE B FOR INITIATING DEVICE CIRCUITS, AND STYLE 4 FOR SIGNALING LINE CIRCUITS.

AUTOMATIC FIRE ALARM SYSTEM SHALL TRANSMIT THE ALARM, SUPERVISORY AND TROUBLE SIGNALS TO AN APPROVED SUPERVISING STATION. THE SUPERVISING STATION SHALL BE LISTED AS EITHER UUFX OR UUJS UNDERWRITERS LABORATORY OR SHALL MEET THE REQUIREMENTS OF FACTORY MUTUAL RESEARCH APPROVAL STANDARD 3011. SUPERVISION OF SYSTEM AND LEASED TELEPHONE LINES SHALL BE ARRANGED BY THE OWNER.

FIRE ALARM APPLICABLE CODES & STANDARDS

INTERNATIONAL FIRE CODE (IFC), 2012 EDITION

INTERNATIONAL BUILDING CODE (IBC), 2012 EDITION

INTERNATIONAL MECHANICAL CODE (IMC), 2012 EDITION

LIFE SAFETY CODE (NFPA 101), 2012 EDITION

NATIONAL ELECTRIC CODE (NFPA 70), 2011 EDITION

ICC/ANSI A117.1 ACCESSIBLE USABLE BUILDINGS & FACILITIES, 2003 EDITION

ABBREVIATIONS LEGEND

AC = ABOVE CEILING
C = CEILING MOUNTED
E = EXISTING TO REMAIN
RC = EXISTING TO REMOVE AND COVER
RD = EXISTING DEVICE TO BE RELOCATED
RL = RELOCATED DEVICE
RR = REMOVE EXISTING AND REPLACE W/NEW

WP = WEATHERPROOF
XP = EXPLOSION PROOF
H = HIGH HUMIDITY
AFF = ABOVE FINISHED FLOOR
AHJ = AUTHORITY HAVING JURISDICTION
ALM = ALARM
ANN = ANNUNCIATOR
BMS = BUILDING MANAGEMENT SYSTEM
CBC = CALIFORNIA BUILDING CODE
CD = (eg. 15CD) CANDELA
CSFM = CALIFORNIA STATE FIRE MARSHAL
DET = DETECTOR
DGP = DATA GATHERING PANEL
EOL = END OF LINE
EPO = EMERGENCY POWER OFF
FACP = FIRE ALARM CONTROL PANEL
FATC = FIRE ALARM TERMINAL CABINET
FBO = FURNISHED BY OTHERS
FCC = FIRE COMMAND CENTER
FAA = FIRE ALARM ANNUNCIATOR
FTR = FIRE ALARM TRANSPONDER
FSD = FIRE SMOKE DAMPER

HT = HEIGHT
HVAC = HEATING, VENTILATION, & AIR CONDITIONING
IMS = INFORMATION MANAGEMENT SYSTEM
MAX = MAXIMUM
MIN = MINIMUM
N/A = NOT APPLICABLE
NAC = NOTIFICATION APPLIANCE CIRCUIT EXTENDER
NDU = NETWORK DISPLAY UNIT
NEC = NATIONAL ELECTRICAL CODE
NFPA = NATIONAL FIRE PROTECTION ASSOCIATION
NIC = NOT IN CONTRACT
NPU = NETWORK PROCESSING UNIT
NTS = NOT TO SCALE
PAP = PRE-ACTION PANEL
SCC = STATUS COMMAND CENTER
SLC = SIGNALING LINE CIRCUIT
SMK = SMOKE
SUPV = SUPERVISORY
TAC = TRUEALERT ADDRESSABLE CONTROLLER
TRBL = TROUBLE
TS = TAMPER SWITCH
TYP = TYPICAL
UON = UNLESS OTHERWISE NOTED
VCC = VOICE COMMAND CENTER
VT = VALVE TAMPER
WF = WATER FLOW
W = (eg. 1/2W) WATT
W/ = WITH
W/O = WITH OUT

DEVICE ADDRESSING LEGEND

ADDRESSABLE DEVICES NUMBERING

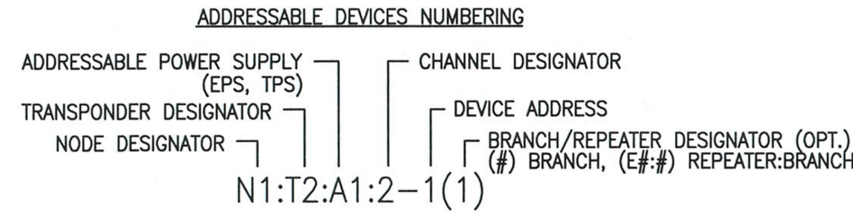

ADDRESSABLE NOTIFICATION DEVICE

Revising Permit # 2015-967545-LT

Only highlighted or clouded revisions are approved on this review. All previous comments apply.

City of Aurora Building Division
Reviewed for Code Compliance
Approved as Noted: John J Van Essen
Date: Dec 01, 2015
2009 INTERNATIONAL CODES & 2014 NEC
RSN: 1064674
Permit #:2015-1026387-LT

SYMBOL KEY

FIRE ALARM SYMBOLS LEGEND

SYMBOL	DESCRIPTION	MODEL#	COMMONLY USED BACKBOX, REFER TO DATA SHEET FOR OTHER OPTIONS
FACP	FIRE ALARM CONTROL PANEL W / 50AH BATTERY SET	SIMPLEX 4100-8010 SIMPLEX 2081-9296	EXISTING
XPDR	FIRE ALARM TRANSPONDER PANEL W / 25AH BATTERY SET	SIMPLEX 4100-9600 SIMPLEX 2081-9287	SUPPLIED BY SIMPLEXGRINNELL (REFER TO MOUNTING DETAIL FOR SPECIFIC DIMENSIONS)
NAC#	EXISTING NAC EXTENDER PANEL # DESIGNATES THE NAC PANEL NUMBER W / 10AH BATTERY SET	SIMPLEX 4009-9201 SIMPLEX 2081-9274	SUPPLIED BY SIMPLEXGRINNELL
	SMOKE SENSOR / BASE	SIMPLEX 4098-9714 SIMPLEX 4098-9792 BASE	4" OCTAGONAL BOX 1 1/2" DEEP
2 WP	DUCT SMOKE SENSOR W/O RELAY DUCT SMOKE SENSOR W/ PAM-SD RELAY REMOTE TEST STATION W/ LED AND KEY SWITCH WEATHERPROOF DUCT HOUSING WP = WEATHERPROOF	SIMPLEX 4098-9755 SIMPLEX 4098-9756 SIMPLEX 2098-9806 SIMPLEX 4098-9845	MOUNT TO DUCTWORK MOUNT TO DUCTWORK SINGLE GANG BOX 2 1/2" DEEP
	RELAY IAM	SIMPLEX 4090-9002	4" SQUARE BOX 2 1/8" DEEP W/TWO GANG COVER
2 P	ENCAPSULATED RELAY PAM-SD	SIMPLEX 4098-9843	SINGLE GANG BOX 2 1/8" DEEP W\COVER
R	ENCAPSULATED RELAY PAM-1, SPDT W/ LED	SIMPLEX 2088-9021	SINGLE GANG BOX 2 1/8" DEEP W\COVER
#	SET FOR PRIVATE MODE CHIME SIGNAL WALL MOUNT 520Hz MULTI-TONE, MULTI-CANDELA A/V RED # =CANDELA RATING	SIMPLEX 49MTV-WRF	4" SQUARE BOX 1 1/2" DEEP
#	WALL MOUNT MULTI-CANDELA STROBE ONLY, RED # = CANDELA RATING	SIMPLEX 49VO-WRF	4" SQUARE BOX 1 1/2" DEEP W/4905-9937 ADAPTER SKIRT WHEN SURFACE MOUNTED
# R	WALL MOUNT MULTI-CANDELA WEATHERPROOF HORN/STROBE W/RED BLANK COVER AND RED LENS # = CANDELA RATING	SIMPLEX 49AV-APPLWE SIMPLEX 49-AVVOWR SIMPLEX 49VOC-WRS	4" SQUARE BOX 1 1/2" DEEP
JB	JUNCTION/PULL BOX	SUPPLIED BY OTHERS	SUPPLIED BY OTHERS
T#	JUNCTION/PULL BOX T# = TAP NUMBER	SUPPLIED BY OTHERS	SUPPLIED BY OTHERS
	EXISTING DOOR HOLDER	SUPPLIED BY OTHERS	SUPPLIED BY OTHERS
	FIRE SMOKE DAMPER	SUPPLIED BY OTHERS	SUPPLIED BY OTHERS
	DIGITAL CLOCK	PRIMEX SNS5X202FQ	
T	DIGITAL TIMER W/REMOTE CONTROL	PRIMEX SNS5X202EFQ	
K	END-OF-LINE RESISTOR 3.3K (EOL) END-OF-LINE RESISTOR 4.7K (EOL) END-OF-LINE RESISTOR 6.8K (EOL) END-OF-LINE RESISTOR 10K (EOL)	SIMPLEX 4081-9002 SIMPLEX 4081-9003 SIMPLEX 4081-9004 SIMPLEX 4081-9008	

SEQUENCE OF OPERATION

SYSTEM OUTPUTS: CONTROL UNIT ANNUNCIATION / NOTIFICATION / FIRE SAFETY CONTROL / NEW SURGERY RENOVATIONS

- A ACTUATE COMMON ALARM SIGNAL INDICATOR AT NODE 1 FACP
- B ACTUATE AUDIBLE ALARM SIGNAL AT NODE 1 FACP
- C ACTUATE COMMON SUPERVISORY SIGNAL INDICATOR AT NODE 1 FACP
- D ACTUATE AUDIBLE SUPERVISORY SIGNAL AT NODE 1 FACP
- E ACTUATE COMMON TROUBLE SIGNAL INDICATOR AT NODE 1 FACP
- F ACTUATE AUDIBLE TROUBLE SIGNAL AT NODE 1 FACP
- G ACTUATE APPROPRIATE LOCATION INDICATOR AT NODE 1 FACP
- H ACTUATE ALL AUDIBLE EVACUATION SIGNALS
- I ACTUATE ALL VISIBLE EVACUATION SIGNALS *
- J ACTUATE SPRINKLER RISER BELL
- K ACTUATE EXTERIOR GENERAL ALARM HORN/STROBE
- L DISPLAY CHANGE OF STATUS
- M TRANSMIT ALARM SIGNAL TO SUPERVISING STATION
- N TRANSMIT SUPV. SIGNAL TO SUPERVISING STATION
- O TRANSMIT TROUBLE SIGNAL TO SUPERVISING STATION
- P RELEASE MAGNETICALLY HELD SMOKE DOORS
- Q RELEASE ELEVATOR FIRE DOORS
- R ELEVATOR SHUNT TRIP
- S MAIN FLOOR ELEVATOR RECALL
- T ALTERNATE FLOOR ELEVATOR RECALL
- U ELEVATOR HAT FLASH
- V SHUT DOWN ASSOCIATED FAN **
- W CLOSE ASSOCIATED FIRE/SMOKE DAMPER **
- X REMOTELY DISPLAY ACTIVE STATUS
- Y ACTUATE SMOKE COMPARTMENT OR VISUALS
- Z RELEASE NEW AUTOMATIC DOOR CONTROLS
- AA RELEASE NEW OR CORRIDOR ACCESS CONTROL
- AB ACTUATE RELEASE STROBE
- AC SEND ALARM SIGNAL TO DDC
- AD SEND EXH FSD SIGNAL TO DDC
- AE SEND SUPPLY DUCTWORK SIGNAL TO DDC
- AF SEND RETURN DUCTWORK SIGNAL TO DDC
- AG SEND OUTSIDE AIR SIGNAL TO DDC

	SYSTEM INPUTS	A	B	C	D	E	F	G	H	I	J	K	L	M	N	O	P	Q	R	S	T	U	V	W	X	Y	Z	AA	AB	AC	AD	AE	AF	AG	REMARKS
1	SMOKE SENSOR/DETECTOR	•	•					•	•	•		•	•	•			•						•	•	•		•	•							1
2	MANUAL PULL STATION	•	•					•	•	•		•	•	•			•								•		•	•							2
3	HEAT SENSOR/DETECTOR	•	•					•	•	•		•	•	•			•								•		•	•							3
4	DUCT SENSOR/DETECTOR			•	•			•					•		•								•	•	•										4
5	MAIN FLR. ELEV. LOBBY SMOKE DETECTOR	•	•					•	•	•		•	•	•			•	•			•				•		•	•							5
6	ELEVATOR LOBBY SMOKE DETECTORS (EXC. MAIN FLR.)	•	•					•	•	•		•	•	•			•	•		•					•		•	•							6
7	ELEVATOR MECH. ROOM HEAT DETECTOR	•	•					•	•	•		•	•	•			•	•	•						•		•	•							7
8	ELEVATOR MECH. ROOM SMOKE DETECTOR	•	•					•	•	•		•	•	•			•	•		•		•			•		•	•							8
9	ELEVATOR SHAFT HEAT DETECTOR	•	•					•	•	•		•	•	•			•		•						•		•	•							9
10	WATERFLOW SWITCH	•	•					•	•	•	•	•	•	•			•								•		•	•							10
11	TAMPER SWITCH			•	•			•				•	•		•										•										11
12	POST INDICATOR VALVE SWITCH			•	•			•				•	•		•										•										12
13	FIRE ALARM AC POWER FAILURE					•	•					•	•			•	•	•							•										13
14	FIRE ALARM SYSTEM LOW BATTERY					•	•					•	•			•									•										14
15	OPEN CIRCUIT OR GROUND FAULT					•	•					•	•			•									•										15
16	CLASS B NOTIFICATION CIRCUIT (NAC) - SHORT					•	•					•	•			•									•										16
17	SIGNAL SILENCE																																		17
18	SMOKE SENSOR/DETECTOR IN SMOKE COMPARTMENT	•	•					•	•	•		•	•	•			•								•	•	•	•	•	•					18
19	HEAT SENSOR/DETECTOR IN SMOKE COMPARTMENT	•	•					•	•	•		•	•	•			•								•	•	•	•	•	•					20
20	MANUAL PULL STATION IN SMOKE COMPARTMENT	•	•					•	•	•		•	•	•			•								•	•	•	•	•	•					21
21	DUCT SENSOR/DETECTOR AT EXH FSD			•	•			•					•		•										•						•				22
22	DUCT SENSOR/DETECTOR AT SUP FSD			•	•			•					•		•										•							•			23
23	DUCT SENSOR/DETECTOR AT RET FSD			•	•			•					•		•										•								•		24
24	DUCT SENSOR/DETECTOR AT FAN SUPPLY			•	•			•					•		•										•							•			25
25	DUCT SENSOR/DETECTOR AT FAN RETURN			•	•			•					•		•										•								•		26
26	DUCT SENSOR/DETECTOR AT FAN OUTSIDE AIR			•	•			•					•		•										•									•	27

NOTES:
* NEW OR VISUALS WILL ACTIVATE ONLY ON SMOKE COMPARTMENT ALARM.
** NEW OR SMOKE CONTROL WILL RECIEVE SIGNAL FROM FIRE ALARM CONTROL PANEL.

NICET CERTIFICATION

TECHNICAL AREA 00303: LEVEL 3
CERTIFICATE #: 93727
VALID THROUGH: 03/01/18

NANCY S. WILTSIE (signature) DATE 10/13/15

tyco SimplexGrinnell
Safer. Smarter. Tyco.™
DISTRICT - 419
6240 SMITH ROAD
DENVER, CO 80216
SERVICE: 303-355-0500
PHONE: 303-355-0500
FAX: 303-355-0615

MEDICAL CENTER OF AURORA SURGERY RENOVATIONS PHASES I-III

MEDICAL CENTER OF AURORA
1501 S POTOMAC STREET
AURORA, COLORADO 80012

Revisions shown with # symbol

ISSUE LOG:

MARK	DATE	CAD	CHK	DESCRIPTION
1	5/22/15	CPM	NSW	REV2 AND REV3 MODIFICATIONS
2	8/20/15	NSW	NSW	FSD CONTROL

DRAWN BY:	C. P. MADDEN
CHECKED BY:	N. S. WILTSIE
ISSUE DATE:	4/27/15
JOB #:	419435597
PROJECT #:	419:982434501

SIMPLEXGRINNELL © 2015

SYSTEM: FIRE ALARM SYSTEM

SHEET: GENERAL INFORMATION

FA-002

IMPORTANT NOTICE TO USER: By accepting or using this drawing and/or the information contained herein, the user agrees to the following terms and conditions: The electronic information in the drawing may be subject to intentional or unintentional alteration. Any use, reuse, copying modification or alteration of the information contained herein shall be at the sole risk of the user. This information may not be sold or transferred to any third party, used on other projects or additions to the project for which it was prepared, or used for completion of this project by any third party. SimplexGrinnell disclaims all liability for the use or reuse of altered files by the user or any third party and such use will be a user's sole risk. User shall, to the fullest extent permitted by law, defend, indemnify, and hold SimplexGrinnell harmless from any and all claims for loss, damage or injury arising directly or indirectly therefrom.

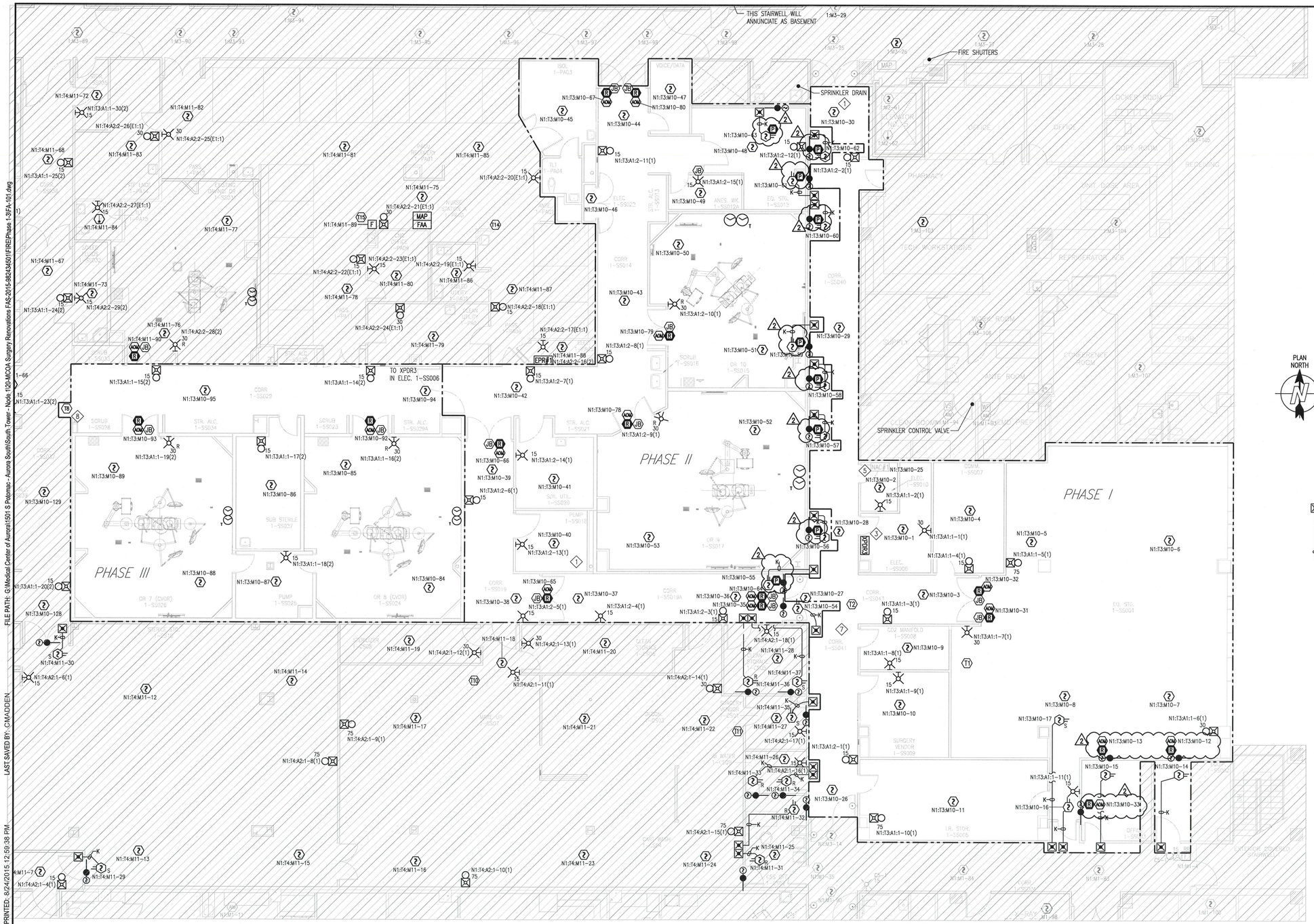

GENERAL NOTES:

1. ALL CEILINGS ARE ASSUMED TO BE 10' A.F.F., SMOOTH CONSTRUCTION UNLESS NOTED OTHERWISE.
2. ALL NOTIFICATION APPLIANCE CANDELA INTENSITY PLUGS SHALL RETAIN THEIR FACTORY SETTING OF "FACP" UNLESS OTHERWISE DIRECTED BY THE AUTHORITY HAVING JURISDICTION.
3. HATCHED AREAS ARE NOT IN SCOPE.

KEYNOTES:

1. REPLACE EXISTING NOTIFICATION AND DETECTION WITH NEW AND CONNECT TO NEW CIRCUITS.
2. MOUNT REMOTE TEST STATIONS IN HEATED, CONDITIONED SPACE.
3. CONNECT TO 120VAC DEDICATED CIRCUIT (EALOR-2) AND CONNECT FROM NEW NODE 1 TRANSPONDER 5 IN AMBULANCE ENTRANCE ELECTRICAL ROOM AND TO NEW TRANSPONDER 4 IN PHASE V ELECTRICAL ROOM 1-CS16 WITH B. REFER TO RISER DIAGRAM.
4. EXISTING FACP TO BE UPGRADED TO A 4100ES AND NEW BACKBOX SUPPLIED.
5. TRANSFER EXISTING NAC PANEL TO IDNET CIRCUIT IN ROOM. ABANDON EXISTING HARD WIRE TRIGGER.
6. REMOVE EXISTING GRAPHIC ANNUNCIATOR.
7. CONNECT PHASE II NOTIFICATION TO T-TAP JBOX INSTALLED UNDER PHASE I.
8. ADD JBOX FOR FUTURE PHASES.

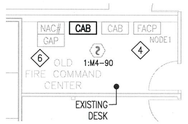

PLAN NORTH

OLD FIRE COMMAND CENTER

SCALE: 1/8" = 1'-0"

0 4 8 16 (IN FEET)

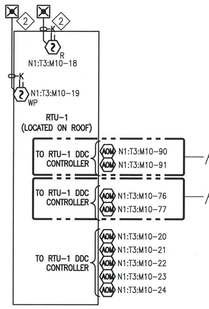

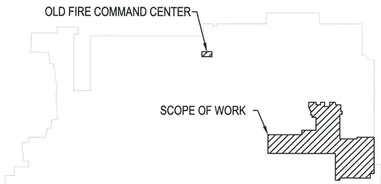

KEYPLAN

Revising Permit # 2015-967545-LT

City of Aurora Building Division
Reviewed for Code Compliance
Approved as Noted: John J Van Essen
Date: Dec 01, 2015
2009 INTERNATIONAL CODES & 2014 NEC

RSN: 1064674
Permit #2015-1026387-LT

Only highlighted or clouded revisions are approved on this review. All previous comments apply.

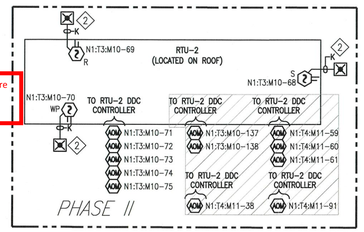

PLAN NORTH

PARTIAL 1ST FLOOR – DEVICE PLACEMENT PLAN

SCALE: 1/8" = 1'-0"

0 4 8 16 (IN FEET)

NICET CERTIFICATION

TECHNICAL AREA 00303: LEVEL 3
CERTIFICATE #: 93727
VALID THROUGH: 03/01/18

NANCY S. WILTSIE — DATE 10/13/15

tyco SimplexGrinnell
Safer. Smarter. Tyco.™

DISTRICT - 419
6240 SMITH ROAD
DENVER, CO 80216
SERVICE: 303-355-0500
PHONE: 303-355-0500
FAX: 303-355-0615

MEDICAL CENTER OF AURORA SURGERY RENOVATIONS PHASES I-III

MEDICAL CENTER OF AURORA
1501 S POTOMAC STREET
AURORA, COLORADO 80012

Revisions shown with symbol

ISSUE LOG: MARK	DATE	CAD	CHK	DESCRIPTION
1	5/22/15	CPM	NSW	REV2 AND REV3 MODIFICATIONS
2	8/20/15	NSW	NSW	FSD CONTROL

DRAWN BY:	C. P. MADDEN
CHECKED BY:	N. S. WILTSIE
ISSUE DATE:	4/27/15
JOB #:	419435597
PROJECT #:	419:982434501
SIMPLEXGRINNELL ©	2015

SYSTEM: FIRE ALARM SYSTEM

SHEET: PARTIAL 1ST FLOOR - DEVICE PLACEMENT PLAN

FA-101

IMPORTANT NOTICE TO USER: By accepting or using this drawing and/or the information contained herein, the user agrees to the following terms and conditions: The electronic information in the drawing may be subject to intentional or unintentional alteration. Any use, reuse, copying modification or alteration of the information contained herein shall be at the sole risk of the user. This information may not be sold or transferred to any third party, used on other projects or additions to the project for which it was prepared, or used for completion of this project by any third party. SimplexGrinnell disclaims all liability for the use or reuse of altered files by the user or any third party and such use will be a user's sole risk. User shall, to the fullest extent permitted by law, defend, indemnify, and hold SimplexGrinnell harmless from any and all claims for loss, damage or injury arising directly or indirectly therefrom.

FILE PATH: G:\Medical Center of Aurora\1501 S Potomac - Aurora South\South Tower - Node 1\20-MCOA Surgery Renovations FAS-2015-982434501\FIRE\Phase 1-3\FA-101.dwg

LAST SAVED BY: CMADDEN

LAST PRINTED: 8/24/2015 12:59:38 PM

24" x 36" - Arch D Size

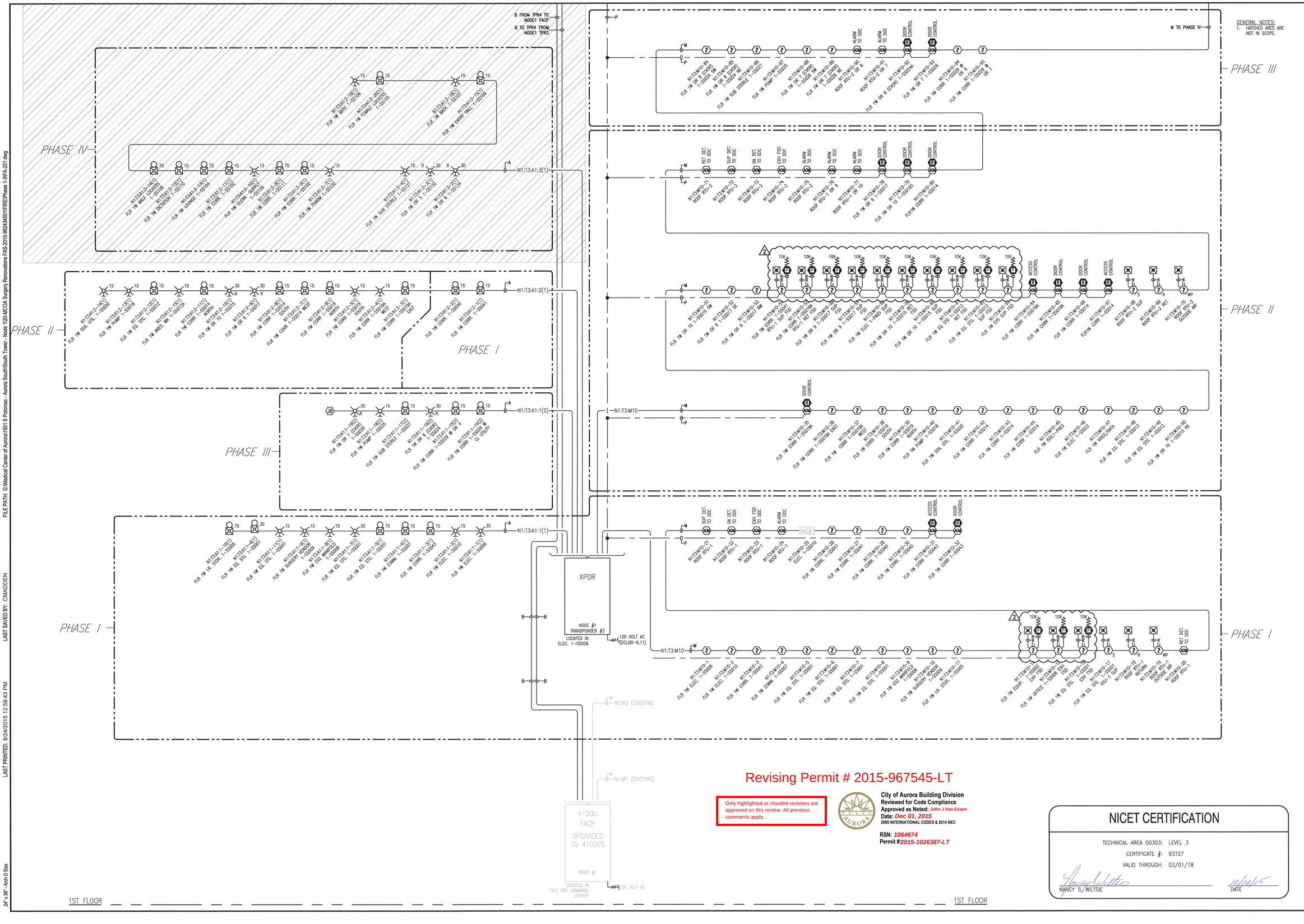

GENERAL NOTES:
1. HATCHED ARES ARE NOT IN SCOPE.

Revising Permit # 2015-967545-LT

Only highlighted or clouded revisions are approved on this review. All previous comments apply.

City of Aurora Building Division
Reviewed for Code Compliance
Approved as Noted: John J Van Essen
Date: Dec 01, 2015
2009 INTERNATIONAL CODES & 2014 NEC

RSN: 1064674
Permit #2015-1026387-LT

NICET CERTIFICATION

TECHNICAL AREA 00303: LEVEL 3
CERTIFICATE #: 93727
VALID THROUGH: 03/01/18

NANCY S. WILTSIE — DATE 10/13/15

tyco SimplexGrinnell
Safer. Smarter. Tyco.™
DISTRICT - 419
6240 SMITH ROAD
DENVER, CO 80216
SERVICE: 303-355-0500
PHONE: 303-355-0500
FAX: 303-355-0615

MEDICAL CENTER OF AURORA SURGERY RENOVATIONS PHASES I-III

MEDICAL CENTER OF AURORA
1501 S POTOMAC STREET
AURORA, COLORADO 80012

Revisions shown with △ symbol

ISSUE LOG:					
MARK	DATE	CAD	CHK	DESCRIPTION	
1	5/22/15	CPM	NSW	REV2 AND REV3 MODIFICATIONS	
2	8/20/15	NSW	NSW	FSD CONTROL	

DRAWN BY:	C. P. MADDEN
CHECKED BY:	N. S. WILTSIE
ISSUE DATE:	4/27/15
JOB #:	419435597
PROJECT #:	419:982434501
SIMPLEXGRINNELL ©	2015

SYSTEM: FIRE ALARM SYSTEM

SHEET: PARTIAL 1ST FLOOR RISER DIAGRAM

FA-201

IMPORTANT NOTICE TO USER: By accepting or using this drawing and/or the information contained herein, the user agrees to the following terms and conditions: The electronic information in the drawing may be subject to intentional or unintentional alteration. Any use, reuse, copying modification or alteration of the information contained herein shall be at the sole risk of the user. This information may not be sold or transferred to any third party, used on other projects or additions to the project for which it was prepared, or used for completion of this project by any third party. SimplexGrinnell disclaims all liability for the use or reuse of altered files by the user or any third party and such use shall be a user's sole risk. User shall, to the fullest extent permitted by law, defend, indemnify, and hold SimplexGrinnell harmless from any and all claims for loss, damage or injury arising directly or indirectly therefrom.

FILE PATH: G:\Medical Center of Aurora\1501 S Potomac - Aurora South\South Tower - Node 1\20-MCOA Surgery Renovations FAS-2015-982434501\FIRE\Phase 1-3\FA-201.dwg
LAST SAVED BY: CMADDEN
LAST PRINTED: 8/24/2015 12:59:43 PM
24" x 36" - Arch D Size

MAPNET CHANNEL N1:M1				SWITCH SETTINGS								
Address	Device Type	Point Type	Location Description	1	2	3	4	5	6	7	8	9
N1:M1-1	ADPRPUL	PULL	1M1-1 FLR 1 W - EXIT BY X-RAY WAITING	X								ON
N1:M1-2	ADPRPUL	PULL	1M1-2 FLR 1W - EXIT HALL BY NUCLEAR MED		X							ON
N1:M1-3	ADPRPUL	PULL	1M1-3 FLR 1W - EXIT BY INTERVENTIONAL	X	X							ON
N1:M1-4	ADPRPUL	PULL	1M1-4 FLR 1 CENTRAL TWR EXIT BY MRI			X						ON
N1:M1-5	RPHOTO	SDUCT	1M1-5 X-RAY ROOF - AHU-97-9 DUCT D	X		X						ON
N1:M1-6	RPHOTO	SDUCT	1M1-6 X-RAY ROOF - AHU-97-9 DUCT D		X	X						ON
N1:M1-7	RPHOTO	SDUCT	1M1-7 X-RAY ROOF - AHU-97-14 DUCT D	X	X	X						ON
N1:M1-8	RPHOTO	SDUCT	1M1-8 X-RAY ROOF - AHU-97-14 DUCT D				X					ON
N1:M1-9	RPHOTO	SDUCT	1M1-9 X-RAY ROOF - AHU-97-15 DUCT D	X			X					ON
N1:M1-10	RPHOTO	SDUCT	1M1-10 X-RAY ROOF - AHU-15 DUCT DET.		X		X					ON
N1:M1-11	GENRM	SD	1M1-11 FLR 1 CENTRAL TWR X-RAY HALL	X	X		X					ON
N1:M1-12	RZNM	RELAY	1M1-12 X-RAY ROOF AHU-97-5 DOWN			X	X					ON
N1:M1-13	RZNM	RELAY	1M1-13 X-RAY ROOF AHU 97-14 SHUTDOWN			X	X					ON
N1:M1-14	RZNM	RELAY	1M1-14 X-RAY ROOF AHU 97-15 SHUTDOWN			X	X					ON
N1:M1-15	PHOTO	VSMOKE	1M1-15 FLR 1W - HALL BY X-RAY WAITING	X	X	X	X					ON
N1:M1-16	PHOTO	VSMOKE	1M1-16 FLR 1W - X-RAY - PET SCAN					X				ON
N1:M1-17	PHOTO	VSMOKE	1M1-17 FLR 1W - X-RAY - PET SCAN	X				X				ON
N1:M1-18	PHOTO	VSMOKE	1M1-18 FLR 1W - HALL BY X-RAY WAITING		X			X				ON
N1:M1-19	PHOTO	VSMOKE	1M1-19 FLR 1W - HALL BY X-RAY WAITING	X	X			X				ON
N1:M1-20	PHOTO	VSMOKE	1M1-20 FLR 1W - X-RAY WAITING RM			X		X				ON
N1:M1-21	PHOTO	VSMOKE	1M1-21 FLR 1W - HALL BY X-RAY WAITING	X		X		X				ON
N1:M1-22	PHOTO	VSMOKE	1M1-22 FLR 1W - HALL BY X-RAY WAITING		X	X		X				ON
N1:M1-23	PHOTO	VSMOKE	1M1-23 FLR 1W - HALL BY PATHOLOGY	X	X	X		X				ON
N1:M1-24	PHOTO	VSMOKE	1M1-24 FLR 1W - HALL BY PATHOLOGY				X	X				ON
N1:M1-25	PHOTO	VSMOKE	1M1-25 FLR 1W - HALL BY PATHOLOGY	X			X	X				ON
N1:M1-26	PHOTO	VSMOKE	1M1-26 FLR 1W - HALL BY PATHOLOGY		X		X	X				ON
N1:M1-27			SPARE	X	X		X	X				ON
N1:M1-28			SPARE				X	X				ON
N1:M1-29			SPARE	X		X	X	X				ON
N1:M1-30			SPARE		X	X	X	X				ON
N1:M1-31			SPARE	X	X	X	X	X				ON
N1:M1-32			SPARE						X			ON
N1:M1-33			SPARE	X					X			ON
N1:M1-34			SPARE		X				X			ON
N1:M1-35			SPARE	X	X				X			ON
N1:M1-36	PHOTO	VSMOKE	1M1-36 FLR 1W - PATHOLOGY LAB					X				ON
N1:M1-37	PHOTO	VSMOKE	1M1-37 FLR 1W - ULTRASOUND SUITE	X				X				ON
N1:M1-38	PHOTO	VSMOKE	1M1-38 FLR 1W - ULTRASOUND SUITE		X			X				ON
N1:M1-39	PHOTO	VSMOKE	1M1-39 FLR 1W - HALL BY X-RAY WAITING	X	X	X		X				ON
N1:M1-40	PHOTO	VSMOKE	1M1-40 FLR 1W - HALL BY X-RAY OFFICES				X	X				ON
N1:M1-41	PHOTO	VSMOKE	1M1-41 FLR 1W - X-RAY WAITING RM	X			X	X				ON
N1:M1-42	PHOTO	VSMOKE	1M1-42 FLR 1W - X-RAY OFFICE SUITE		X		X	X				ON
N1:M1-43	PHOTO	VSMOKE	1M1-43 FLR 1W - X-RAY OFFICE SUITE	X	X		X	X				ON
N1:M1-44	PHOTO	VSMOKE	1M1-44 FLR 1W - X-RAY OFFICE SUITE				X	X				ON
N1:M1-45	PHOTO	VSMOKE	1M1-45 FLR 1W - HALL BY X-RAY OFFICES	X			X	X				ON
N1:M1-46	PHOTO	VSMOKE	1M1-46 FLR 1W - HALL BY X-RAY OFFICES				X	X				ON
N1:M1-47	PHOTO	VSMOKE	1M1-47 FLR 1W - HALL BY NUCLEAR MED	X	X	X	X	X				ON
N1:M1-48	PHOTO	VSMOKE	1M1-48 FLR 1W - HALL BY NUCLEAR MED					X	X			ON
N1:M1-49	PHOTO	VSMOKE	1M1-49 FLR 1W - HALL BY NUCLEAR MED	X				X	X			ON
N1:M1-50	PHOTO	VSMOKE	1M1-50 FLR 1W - NUCLEAR MEDICINE		X			X	X			ON
N1:M1-51	PHOTO	VSMOKE	1M1-51 FLR 1W - NUCLEAR MEDICINE		X			X	X			ON
N1:M1-52	PHOTO	VSMOKE	1M1-52 FLR 1W - NUCLEAR MED HOT LAB			X		X	X			ON
N1:M1-53	PHOTO	VSMOKE	1M1-53 FLR 1W - HALL BY NUCLEAR MED	X		X		X	X			ON
N1:M1-54	PHOTO	VSMOKE	1M1-54 FLR 1W - EXIT HALL BY X-RAY 4		X	X		X	X			ON
N1:M1-55	PHOTO	VSMOKE	1M1-55 FLR 1W - EXIT HALL BY X-RAY 3	X	X			X	X			ON
N1:M1-56	PHOTO	VSMOKE	1M1-56 FLR 1W - INTER-HALL BY X-RAY 3					X	X			ON
N1:M1-57	PHOTO	VSMOKE	1M1-57 FLR 1W - INTER-HALL BY X-RAY 3	X				X	X			ON
N1:M1-58	PHOTO	VSMOKE	1M1-58 FLR 1W - INTER-HALL BY X-RAY 3		X			X	X			ON
N1:M1-59	PHOTO	VSMOKE	1M1-59 FLR 1W - INTER-HALL BY X-RAY 4	X	X			X	X			ON
N1:M1-60	PHOTO	VSMOKE	1M1-60 FLR 1W - HALL BY CAT SCAN				X	X	X			ON
N1:M1-61	PHOTO	VSMOKE	1M1-61 FLR 1W - HALL BY CAT SCAN	X			X	X	X			ON
N1:M1-62	PHOTO	VSMOKE	1M1-62 FLR 1W - HALL BY CAT SCAN		X		X	X	X			ON
N1:M1-63	PHOTO	VSMOKE	1M1-63 FLR 1W - CAT SCAN SUITE	X	X	X	X	X	X			ON
N1:M1-64	PHOTO	VSMOKE	1M1-64 FLR 1W - HALL BY CAT SCAN						X			ON
N1:M1-65	PHOTO	VSMOKE	1M1-65 FLR 1W - X-RAY RM 5 CHANGING	X							X	ON
N1:M1-66	PHOTO	VSMOKE	1M1-66 FLR 1W - X-RAY TECH WORK AREA		X						X	ON
N1:M1-67	PHOTO	VSMOKE	1M1-67 FLR 1W - X-RAY OFFICE BY RM 1	X	X						X	ON
N1:M1-68	PHOTO	VSMOKE	1M1-68 FLR 1W - X-RAY RM 1 CHANGING		X						X	ON
N1:M1-69	PHOTO	VSMOKE	1M1-69 FLR 1W - HALL BY X-RAY LOUNGE	X		X					X	ON
N1:M1-70	PHOTO	VSMOKE	1M1-70 FLR 1W - HALL BY INTERVENTIONAL		X	X					X	ON
N1:M1-71	ADPRPUL	PULL	1M1-71 FL 1 CENTRAL TWR MR NRS STATION	X	X	X					X	ON
N1:M1-72	PHOTO	VSMOKE	1M1-72 FLR 1 CENTRAL TWR HALL BY MRI				X				X	ON
N1:M1-73	RZNM	RELAY	1M1-73 1ST FL ROLL UP DOOR	X			X				X	ON
N1:M1-74	PHOTO	VSMOKE	1M1-74 FLR 1W - HALL BY INTERVENTIONAL		X		X				X	ON
N1:M1-75	PHOTO	VSMOKE	1M1-75 FLR 1W - INTERVENTIONAL X-RAY	X	X		X				X	ON
N1:M1-76	PHOTO	VSMOKE	1M1-76 FLR 1W - HALL BY INTERVENTIONAL			X	X				X	ON
N1:M1-77	PHOTO	VSMOKE	1M1-77 FLR 1W - HALL BY INTERVENTIONAL	X		X	X				X	ON
N1:M1-78	PHOTO	VSMOKE	1M1-78 FLR 1W - INTERVENTIONAL RM 3		X	X					X	ON
N1:M1-79	PHOTO	VSMOKE	1M1-79 FLR 1 - INTERVENTIONAL EQUIP. RM	X	X	X	X				X	ON
N1:M1-80	PHOTO	VSMOKE	1M1-80 FLR 1W - INTERVENTIONAL X-RAY					X	X			ON
N1:M1-81	PHOTO	VSMOKE	1M1-81 FLR 1W - INTERVENTIONAL X-RAY	X				X	X			ON
N1:M1-82	PHOTO	VSMOKE	1M1-82 FLR 1W - INTERVENTIONAL X-RAY		X			X	X			ON
N1:M1-83	PHOTO	VSMOKE	1M1-83 FLR 1W - HALL BY MRI EQUIP. RM	X	X			X	X			ON
N1:M1-84	PHOTO	VSMOKE	1M1-84 FLR 1W - HALL BY MRI EQUIP. RM			X		X	X			ON
N1:M1-85			SPARE	X		X		X	X			ON
N1:M1-86			SPARE		X	X		X	X			ON
N1:M1-87			SPARE	X	X	X		X	X			ON
N1:M1-88			SPARE				X	X	X			ON
N1:M1-89	PHOTO	VSMOKE	1M1-89 FLR 1W - HALL BY MRI	X			X	X	X			ON
N1:M1-90	PHOTO	VSMOKE	1M1-90 FLR 1W - HALL BY MRI		X		X	X	X			ON
N1:M1-91	PHOTO	VSMOKE	1M1-91 FLR 1W - X-RAY - PET SCAN	X	X		X	X	X			ON
N1:M1-92			SPARE				X	X	X			ON
N1:M1-93	GENRM	SD	1M1-93 FLR 1W - BLOOD BANK TAMPER	X			X	X	X			ON
N1:M1-94	GENRM	WATER	1M1-94 FLR 1W - BLOOD BANK DAMPER			X	X	X	X			ON
N1:M1-95	MRZMM	HEAT	1M1-95 FLR 1W - MRI SCANNER ROOM	X	X	X	X	X	X			ON
N1:M1-96	PHOTO	VSMOKE	1M1-96 FLR 1W - MRI CONTROL RM						X	X		ON
N1:M1-97	PHOTO	VSMOKE	1M1-97 FLR 1W - MRI SUITE	X					X	X		ON
N1:M1-98	PHOTO	VSMOKE	1M1-98 FLR 1W - MRI EQUIPMENT RM		X				X	X		ON
N1:M1-99	PHOTO	VSMOKE	1M1-99 FLR 1W - INTERVENTIONAL X-RAY	X	X				X	X		ON
N1:M1-100	PHOTO	VSMOKE	1M1-100 FLR 1W - INTERVENTIONAL DAY 2		X	X			X	X		ON
N1:M1-101	PHOTO	VSMOKE	1M1-101 FLR 1W - INTERVENTIONAL DAY 1	X	X				X	X		ON
N1:M1-102	PHOTO	VSMOKE	1M1-102 FLR 1W - INTERVENTIONAL N.STAT.		X	X			X	X		ON
N1:M1-103	RPHOTO	SDUCT	1M1-103 FLR 1W - HALL BY INTERVENTIONAL	X	X	X			X	X		ON
N1:M1-104			SPARE				X		X	X		ON
N1:M1-105			SPARE	X			X		X	X		ON
N1:M1-106			SPARE		X		X		X	X		ON
N1:M1-107	PHOTO	VSMOKE	1M1-107 FLR 1 W - OR STORAGE	X	X		X		X	X		ON
N1:M1-108			SPARE				X	X	X	X		ON
N1:M1-109			SPARE	X		X	X	X	X	X		ON
N1:M1-110			SPARE		X	X	X		X	X		ON
N1:M1-111			SPARE	X	X	X	X		X	X		ON
N1:M1-112			SPARE					X	X	X		ON
N1:M1-113			SPARE	X					X	X		ON
N1:M1-114			SPARE			X			X	X		ON
N1:M1-115			SPARE	X	X				X	X		ON
N1:M1-116			SPARE				X		X	X		ON
N1:M1-117			SPARE	X		X	X		X	X		ON
N1:M1-118			SPARE		X	X	X		X	X		ON
N1:M1-119			SPARE	X	X	X	X		X	X		ON
N1:M1-120			SPARE					X	X	X		ON
N1:M1-121			SPARE	X			X	X	X	X		ON
N1:M1-123			SPARE		X		X	X	X	X		ON
N1:M1-124			SPARE	X		X	X	X	X	X		ON
N1:M1-125			SPARE		X	X	X	X	X	X		ON
N1:M1-126			SPARE	X	X	X	X	X	X	X		ON
N1:M1-127			SPARE									ON

NOTE: THE LABELS SHOWN ABOVE WILL BE USED FOR PROGRAMMING PURPOSES.
THE LABELS ARE BASED UPON INFORMATION SHOWN ON THE ARCHITECTURAL DRAWINGS.
ANY CHANGES TO THESE LABELS MUST BE NOTED ON THE SUBMITTAL REVIEW, PRIOR TO PROGRAMMING.
POINTS SHOWN IN ITALIC TEXT REFER TO EXISTING DEVICES.

MAPNET CHANNEL N1:M2				SWITCH SETTINGS								
Address	Device Type	Point Type	Location Description	1	2	3	4	5	6	7	8	9
N1:M2-1	GENRM	SD	1M2-1 DOCK - FIRE PUMP POWER LOSS	X								ON
N1:M2-2	GENRM	SD	1M2-2 DOCK - FIRE PUMP ISOLATION VALVE		X							ON
N1:M2-3	GENRM	WATER	1M2-3 DOCK - FIRE PUMP CONTROL #1	X	X							ON
N1:M2-4	GENRM	SD	1M2-4 DOCK FIRE PUMP BY-PASS TAMPER			X						ON
N1:M2-5	GENRM	SD	1M2-5 DOCK PUMP RM TEST HEADER	X		X						ON
N1:M2-6	GENRM	SD	1M2-6 DOCK - FIRE PUMP AREA A TAMPER		X	X						ON
N1:M2-7	GENRM	SD	1M2-7 DOCK - FIRE PUMP MANIFOLD	X	X	X						ON
N1:M2-8	GENRM	WATER	1M2-8 DOCK - FIRE PUMP AREA B FLOW				X					ON
N1:M2-9	GENRM	SD	1M2-9 DOCK - FIRE PUMP AREA B TAMPER	X			X					ON
N1:M2-10	GENRM	SD	1M2-10 DOCK - FIRE PUMP ISOLATION VALVE		X		X					ON
N1:M2-11	GENRM	SD	1M2-11 DOCK - FIRE PUMP AREA A FLOW	X	X		X					ON
N1:M2-12	GENRM	SD	1M2-12 DOCK - FIRE PUMP AREA A TAMPER			X	X					ON
N1:M2-13	GENRM	WATER	1M2-13 DOCK - FIRE PUMP AREA C FLOW	X		X	X					ON
N1:M2-14	GENRM	SD	1M2-14 DOCK - FIRE PUMP AREA C TAMPER		X	X	X					ON
N1:M2-15	GENRM	WATER	1M2-15 DOCK - FIRE PUMP AREA D FLOW	X	X	X	X					ON
N1:M2-16	GENRM	SD	1M2-16 DOCK - FIRE PUMP AREA D TAMPER				X					ON
N1:M2-17	GENRM	WATER	1M2-17 DOCK - FIRE PUMP - RAILYER FLOW	X			X					ON
N1:M2-18	GENRM	SD	1M2-18 DOCK-FIRE PUMP-RAILYER TAMPER		X		X					ON
N1:M2-19	GENRM	SD	1M2-19 DOCK - FIRE PUMP POWER SWITCH	X	X		X					ON
N1:M2-20	GENRM	TROUBLE	1M2-20 DOCK - FIRE PUMP RUN TROUBLE		X		X					ON
N1:M2-21	GENRM	SD	1M2-21 DOCK- PUMP RM FLOW SWITCH		X		X					ON
N1:M2-22	GENRM	SD	1M2-22 BSMT FIRE PUMP POWER LOSS	X	X		X					ON
N1:M2-23	GENRM	SD	1M2-23 DOCK-FIRE PUMP REVERSED PHASE	X	X		X					ON
N1:M2-24	RZNM	CHAMPER	1M2-24 AHU-1 SAM DAMPERS MECH ROOM				X	X				ON
N1:M2-25	RZNM	RELAY	1M2-25 ELEVATOR #5 SHOW DWN	X			X	X				ON
N1:M2-26	RZNM	RELAY	1M2-26 ELEVATOR #5 DOOR OPEN				X	X				ON
N1:M2-27	RZNM	CHAMPER	1M2-27 AHU-1 SAM DAMPERS MECH ROOM	X	X		X	X				ON
N1:M2-28	GENRM	SD	1M2-28 BSMT ELEV S PIT DETECTOR			X	X	X				ON
N1:M2-29	RPHOTO	SDUCT	1M2-29 BSMT - MECH RM AHU-97-1 DUCT	X		X	X	X				ON
N1:M2-30	RPHOTO	SDUCT	1M2-30 BSMT AHU-1 MECH RM DUCT DETECTOR	X		X	X	X				ON
N1:M2-31	RPHOTO	SDUCT	1M2-31 BSMT AHU-1 MECH RM DUCT DETECTOR	X	X	X	X	X				ON
N1:M2-32	RPHOTO	SDUCT	1M2-32 BSMT - MECH RM AHU-97-2 DUCT						X			ON
N1:M2-33	ADPRPUL	PULL	1M2-33 BSMT - HALLWAY PULL STATION	X				X	X			ON
N1:M2-34	ADPRPUL	PULL	1M2-34 LOADING DOCK FIRE PUMP RM		X			X	X			ON
N1:M2-35	ADPRPUL	PULL	1M2-35 BSMT - MATERIALS MGMT. PULL	X	X			X	X			ON
N1:M2-36	ADPRPUL	PULL	1M2-36 BSMT - MATERIALS MGMT. PULL			X		X	X			ON
N1:M2-37	HEAT	HEAT	1M2-37 BSMT - MECH RM BAY DOCK DOORS	X		X		X	X			ON
N1:M2-38	HEAT	HEAT	1M2-38 BSMT - MECH RM BAY DOCK DOORS		X	X		X	X			ON
N1:M2-39	PHOTO	VSMOKE	1M2-39 BSMT CENTRAL TWR HALL	X	X	X		X	X			ON
N1:M2-40	PHOTO	VSMOKE	1M2-40 BSMT CENTRAL TWR HALL				X	X	X			ON
N1:M2-41	PHOTO	VSMOKE	1M2-41 BSMT - ELEVATOR LOBBY	X			X	X	X			ON
N1:M2-42	PHOTO	VSMOKE	1M2-42 BSMT - MAIN HALLWAY		X		X	X	X			ON
N1:M2-43	PHOTO	VSMOKE	1M2-43 BSMT - MAIN HALLWAY	X	X		X	X	X			ON
N1:M2-44	PHOTO	VSMOKE	1M2-44 BSMT - MAIN HALLWAY			X	X	X	X			ON
N1:M2-45	PHOTO	VSMOKE	1M2-45 BSMT - MECH RM BAY RIX	X	X	X	X	X	X			ON
N1:M2-46	HEAT	HEAT	1M2-46 BSMT - ELEVS EQUIP. RM		X	X	X	X	X			ON
N1:M2-47	PHOTO	VSMOKE	1M2-47 BSMT - ELEVS PIT DETECTOR	X	X	X	X	X	X			ON
N1:M2-48	HEAT	HEAT	1M2-48 BSMT - ELEVS PIT DETECTOR				X	X	X			ON
N1:M2-49	PHOTO	VSMOKE	1M2-49 BSMT CENTRAL TWR MATERIALS MGMT.	X			X	X	X			ON
N1:M2-50	PHOTO	VSMOKE	1M2-50 BSMT CENTRAL TWR MATERIALS MGMT.				X	X	X			ON
N1:M2-51	PHOTO	VSMOKE	1M2-51 BSMT CENTRAL TWR MATERIALS MGMT.	X	X		X	X	X			ON
N1:M2-52	PHOTO	VSMOKE	1M2-52 BSMT LINEN CHT STORAGE RM			X	X	X	X			ON
N1:M2-53	PHOTO	VSMOKE	1M2-53 LOADING DOCK MEDICAL GAS STORAGE	X		X	X	X	X			ON
N1:M2-54	HEAT	HEAT	1M2-54 LOADING DOCK FIRE PUMP RM		X	X	X	X	X			ON
N1:M2-55	PHOTO	VSMOKE	1M2-55 BSMT - MAILROOM	X	X	X		X	X			ON
N1:M2-56	PHOTO	VSMOKE	1M2-56 BSMT - MATERIALS MGMT. OFFICES				X	X	X			ON
N1:M2-57	PHOTO	VSMOKE	1M2-57 BSMT - MATERIALS MGMT. OFFICES	X			X	X	X			ON
N1:M2-58	PHOTO	VSMOKE	1M2-58 BSMT - MATERIALS MGMT.		X		X	X	X			ON
N1:M2-59	PHOTO	VSMOKE	1M2-59 BSMT - MATERIALS MGMT.	X	X		X	X	X			ON
N1:M2-60	PHOTO	VSMOKE	1M2-60 BSMT - MATERIALS MGMT.				X	X	X			ON
N1:M2-61	PHOTO	VSMOKE	1M2-61 FLR 1W - ELEVS TOP OF SHAFT	X			X	X	X			ON
N1:M2-62	HEAT	HEAT	1M2-62 FLR 1W - ELEVS TOP OF SHAFT		X		X	X	X			ON
N1:M2-63	GENRM	WATER	1M2-63 DOCK - PUMP ANTI-FREEZE TAMPER	X	X		X	X	X			ON
N1:M2-64	GENRM	SD	1M2-64 DOCK - PUMP ANTI-FREEZE TAMPER						X			ON
N1:M2-65	RZNM	CHAMPER	1M2-65 FAN SHUTDOWN FOR AHU 5 & 6	X							X	ON
N1:M2-66	PHOTO	VSMOKE	1M2-66 BSMT - EVS BUILT STORAGE AREA		X						X	ON
N1:M2-67	PHOTO	VSMOKE	1M2-67 BSMT CENTRAL TWR EVS OFFICE	X	X						X	ON
N1:M2-68	PHOTO	VSMOKE	1M2-68 BSMT - EVS MATERIALS MGMT.			X					X	ON
N1:M2-69	PHOTO	VSMOKE	1M2-69 BSMT CENTRAL TWR O.R. SUPPLY RM	X		X					X	ON
N1:M2-70	PHOTO	VSMOKE	1M2-70 BSMT CENTRAL TWR O.R. SUPPLY RM		X	X					X	ON
N1:M2-71			SPARE	X	X	X					X	ON
N1:M2-72	GENRM	SUPERV	1M2-72 PARKING GARAGE FIRE ALARM				X				X	ON
N1:M2-73			SPARE	X			X				X	ON
N1:M2-74	PHOTO	VSMOKE	1M2-74 ISMT - O.R. SUPPLY IN CEILING		X		X				X	ON
N1:M2-75			SPARE	X	X		X				X	ON
N1:M2-76	PHOTO	VSMOKE	1M2-76 BSMT - MAITRIAL MGMT STORFROOM			X	X				X	ON
N1:M2-77			SPARE	X		X	X				X	ON
N1:M2-78	PHOTO	VSMOKE	1M2-78 BSMT CENTRAL TWR O.R. SUPPLY		X	X	X				X	ON
N1:M2-79			SPARE	X	X	X	X				X	ON
N1:M2-80			SPARE					X	X			ON
N1:M2-81	PHOTO	VSMOKE	1M2-81 BSMT - EVS OFFICE AREA		X			X	X			ON
N1:M2-82	PHOTO	VSMOKE	1M2-82 BSMT - EVS OFFICE AREA	X	X			X	X			ON
N1:M2-83	PHOTO	VSMOKE	1M2-83 BSMT - EVS LOUNGE AREA			X		X	X			ON
N1:M2-84	PHOTO	VSMOKE	1M2-84 BSMT - EVS AREA IN CEILING ?			X	X	X	X			ON
N1:M2-85	PHOTO	VSMOKE	1M2-85 BSMT - EVS LOUNGE AREA	X		X		X	X			ON
N1:M2-86	PHOTO	VSMOKE	1M2-86 BSMT - EVS LOUNGE AREA			X	X	X	X			ON
N1:M2-87	PHOTO	VSMOKE	1M2-87 BSMT - EVS BACK HALLWAY	X	X	X		X	X			ON
N1:M2-88	PHOTO	VSMOKE	1M2-88 BSMT - EVS BACK HALLWAY				X	X	X			ON
N1:M2-89	PHOTO	VSMOKE	1M2-89 BSMT - EVS BACK HALLWAY	X			X	X	X			ON
N1:M2-90	RZNM	CHAMPER	1M2-90 BASEMENT MATERIALS MANAGEMENT		X		X	X	X			ON
N1:M2-91			SPARE	X	X		X	X	X			ON
N1:M2-92			SPARE				X	X	X			ON
N1:M2-93			SPARE				X	X	X			ON
N1:M2-94			SPARE			X	X	X	X			ON
N1:M2-95			SPARE	X		X	X	X	X			ON
N1:M2-96			SPARE						X	X		ON
N1:M2-97			SPARE	X					X	X		ON
N1:M2-98			SPARE		X				X	X		ON
N1:M2-99			SPARE	X	X				X	X		ON
N1:M2-100			SPARE				X		X	X		ON
N1:M2-101			SPARE	X		X			X	X		ON
N1:M2-102			SPARE		X	X			X	X		ON
N1:M2-103			SPARE	X	X	X			X	X		ON
N1:M2-104			SPARE				X		X	X		ON
N1:M2-105			SPARE	X			X		X	X		ON
N1:M2-106			SPARE		X		X		X	X		ON
N1:M2-107			SPARE	X	X		X		X	X		ON
N1:M2-108			SPARE				X	X	X	X		ON
N1:M2-109			SPARE	X		X	X	X	X	X		ON
N1:M2-110			SPARE		X	X	X		X	X		ON
N1:M2-111			SPARE	X	X	X	X		X	X		ON
N1:M2-112			SPARE					X	X	X		ON
N1:M2-113			SPARE	X					X	X		ON
N1:M2-114			SPARE			X			X	X		ON
N1:M2-115			SPARE	X	X				X	X		ON
N1:M2-116			SPARE				X		X	X		ON
N1:M2-117			SPARE	X		X	X		X	X		ON
N1:M2-118			SPARE		X	X	X		X	X		ON
N1:M2-119			SPARE	X	X	X	X		X	X		ON
N1:M2-120			SPARE					X	X	X		ON
N1:M2-121			SPARE	X			X	X	X	X		ON
N1:M2-123			SPARE		X		X	X	X	X		ON
N1:M2-124			SPARE	X		X	X	X	X	X		ON
N1:M2-125			SPARE		X	X	X	X	X	X		ON
N1:M2-126			SPARE	X	X	X	X	X	X	X		ON
N1:M2-127			SPARE									ON

NOTE: THE LABELS SHOWN ABOVE WILL BE USED FOR PROGRAMMING PURPOSES.
THE LABELS ARE BASED UPON INFORMATION SHOWN ON THE ARCHITECTURAL DRAWINGS.
ANY CHANGES TO THESE LABELS MUST BE NOTED ON THE SUBMITTAL REVIEW, PRIOR TO PROGRAMMING.
POINTS SHOWN IN ITALIC TEXT REFER TO EXISTING DEVICES.

MAPNET CHANNEL N1:M3				SWITCH SETTINGS								
Address	Device Type	Point Type	Location Description	1	2	3	4	5	6	7	8	9
N1:M3-1	ADPRPUL	PULL	1M3-1 FLR 1E - EXIT BY PHARMACY	X								ON
N1:M3-2	ADPRPUL	PULL	1M3-2 FLR 1E - E.D. DOOR ELEC. RM		X							ON
N1:M3-3			SPARE	X	X							ON
N1:M3-4			SPARE			X						ON
N1:M3-5	ADPRPUL	PULL	1M3-5 FLR 1E - E.D. WAITING RM	X		X						ON
N1:M3-6	ADPRPUL	PULL	1M3-6 FLR 1E - EXIT BY E.D. WAITING RM		X	X						ON
N1:M3-7			SPARE	X	X							ON
N1:M3-8	RZNM	RELAY	1M3-8 1ST FL ELEVATOR #5 DRN DOOR			X						ON
N1:M3-9	PHOTO	VSMOKE	1M3-9 FLR 1E - E.D. SUTURE LAC	X		X						ON
N1:M3-10	RZNM	RELAY	1M3-10 1ST FL CONTROL FOR AUTO DOORS		X	X						ON
N1:M3-11	GENRM	SD	1M3-11 FLR 1E-ER GLYCOL LOOP IN CEILING	X	X	X						ON
N1:M3-12	PHOTO	VSMOKE	1M3-12 FLR 1E - E.D. DRYNAGE			X	X					ON
N1:M3-13	GENRM	SD	1M3-13 BSMT ELEV S START TAMPER SWITCH	X	X	X	X					ON
N1:M3-14	PHOTO	VSMOKE	1M3-14 FLR 1W - HALL BY MRI	X	X	X						ON
N1:M3-15			SPARE	X	X	X						ON
N1:M3-16			SPARE				X					ON
	PHOTO	VSMOKE	1M3-17 FLR 1E - WAITING RESULTS	X			X					ON
N1:M3-18			SPARE		X		X					ON
N1:M3-19			SPARE	X	X		X					ON
N1:M3-20			SPARE			X	X					ON
N1:M3-21			SPARE	X		X	X					ON
N1:M3-22			SPARE		X	X	X					ON
N1:M3-23			SPARE	X	X	X	X					ON
N1:M3-24			SPARE				X	X				ON
N1:M3-25	PHOTO	VSMOKE	1M3-25 FLR 1E - HALL BY PHARMACY	X			X	X				ON
N1:M3-26	PHOTO	VSMOKE	1M3-26 FLR 1E - EXIT HALL BY PH

MAPNET CHANNEL N1:M4				SWITCH SETTINGS								
Address	Device Type	Point Type	Location Description	1	2	3	4	5	6	7	8	9
N1:M4-1	GEMAM	SD	1:M4-1 FLR 1 CENTRAL TWR ELEVATOR 1	X								ON
N1:M4-2	GEMAM	SD	1:M4-2 FLR 1 CENTRAL TWR ELEV ELEVATOR RM		X							ON
N1:M4-3	GEMAM	SUPERT	1:M4-3 FLR 1 KITCHEN HOOD SUPPRESSION	X	X							ON
N1:M4-4	RZAM	FIRELAT	1:M4-4 1ST FLR MDF LIEBERT UNIT CONTROL			X						ON
N1:M4-5	RZAM	FIRELAT	1:M4-5 1ST FLR MDF LIEBERT UNIT CONTROL	X		X						ON
N1:M4-6	RZAM	RELAY	1:M4-6 SURGERY HOLLOW DOOR IN PHARMACY		X	X						ON
N1:M4-7	RZAM	RELAY	1:M4-7 FLR 1 CENTRAL TOWER ELEVATOR #1	X	X	X						ON
N1:M4-8	RZAM	RELAY	1:M4-8 FLR 1 CENTRAL TOWER ELEVATOR #1			X		X				ON
N1:M4-9	RZAM	RELAY	1:M4-9 FLR 3 CNTRL B ELEVATOR ROLL DOWN	X		X						ON
N1:M4-10	RZAM	RELAY	1:M4-10 FLR 3 CNTL B ELEVATOR ROLL DOWN		X		X					ON
N1:M4-11	RZAM	RELAY	1:M4-11 FLR 4 CTRL B ELEVATOR ROLL DOWN	X	X		X					ON
N1:M4-12	RZAM	RELAY	1:M4-12 CENTRAL TOWER ELEVATOR 1			X	X					ON
N1:M4-13	RZAM	RELAY	1:M4-13 CENTRAL TOWER ELEVATOR #6 RECALL	X		X	X					ON
N1:M4-14	RZAM	RELAY	1:M4-14 CENTRAL TOWER ELEVATOR #6 RECALL			X	X	X				ON
N1:M4-15	RZAM	RELAY	1:M4-15 CENTRAL TOWER ELEVATOR 1	X		X	X	X				ON
N1:M4-16	RZAM	RELAY	1:M4-16 CENTRAL TOWER ELEV #6 SHUNT TRIP						X			ON
N1:M4-17	RZAM	RELAY	1:M4-17 FLR 1 CENTRAL TOWER GFT SHUNT	X					X			ON
N1:M4-18	RZAM	RELAY	1:M4-18 FLR 1 KITCHEN FIRE DOORS		X				X			ON
N1:M4-19	RZAM	RELAY	1:M4-19 FLR 1 CTRL TWR ELEV 3 SHUNT TRIP	X	X				X			ON
N1:M4-20	RZAM	COMPER	1:M4-20 FLR 1 CENTRAL PLANT AHU 97-6				X		X			ON
N1:M4-21	RZAM	ENVIRO	1:M4-21 FLR 1 CENTR ELEVN IN LT. PI	X			X		X			ON
N1:M4-22	GEMAM	FIRE	1:M4-22 FLR 1 CENTRL TWR HALON IN LT. PI		X	X			X			ON
N1:M4-23			SPARE	X	X	X			X			ON
N1:M4-24			SPARE				X	X				ON
N1:M4-25	HEAT	HEAT	1:M4-25 FLR 1E - GRAVING RM GRILLE AREA	X			X	X			X	ON
N1:M4-26	HEAT	HEAT	1:M4-26 FLR 1B - ELEVATOR 4 IN PIT		X		X	X			X	ON
N1:M4-27	HEAT	HEAT	1:M4-27 FLR 1B - ELEVATOR 1 & 3 IN PIT	X	X		X	X			X	ON
N1:M4-28	HEAT	HEAT	1:M4-28 FLR 1B - ELEVATOR 1 & 3 IN PIT			X	X	X			X	ON
N1:M4-29	HEAT	HEAT	1:M4-29 FLR 1B - ELEV. 1	X		X	X	X			X	ON
N1:M4-30	HEAT	HEAT	1:M4-30 FLR 5 CENTRAL A-ELEV. 1&3 SHAFT		X	X	X	X			X	ON
N1:M4-31	HEAT	HEAT	1:M4-31 FLR 5B - CENTRAL A-ELEV. 4 SHAFT	X	X	X	X	X			X	ON
N1:M4-32	PHOTO	VSMOKE	1:M4-32 FLR 1B - ELEV. 1							X		ON
N1:M4-33	PHOTO	VSMOKE	1:M4-33 FLR 1B - ELEV.4 BACK LOBBY	X						X		ON
N1:M4-34	PHOTO	VSMOKE	1:M4-34 FLR 1B - ELEV.4 BACK LOBBY		X					X		ON
N1:M4-35	PHOTO	VSMOKE	1:M4-35 FLR 1E - HALL BESIDE CHAPEL	X	X					X		ON
N1:M4-36	PHOTO	VSMOKE	1:M4-36 FLR 2 CENTRAL TWR A - ELEV. LOB.			X				X		ON
N1:M4-37	PHOTO	VSMOKE	1:M4-37 FLR 2 CENTRAL TWR A - ELEV. LOB.	X		X				X		ON
N1:M4-38	PHOTO	VSMOKE	1:M4-38 FLR 3 CENTRAL TWR A - ELEV. LOB.		X	X				X		ON
N1:M4-39	PHOTO	VSMOKE	1:M4-39 FLR 3 CENTRAL TWR A - ELEV. LOB.	X	X					X		ON
N1:M4-40	PHOTO	VSMOKE	1:M4-40 FLR 4 CENTRAL TWR A - ELEV. LOB.				X	X		X		ON
N1:M4-41	PHOTO	VSMOKE	1:M4-41 FLR 4 CENTRAL TWR A - ELEV. LOB.				X	X		X		ON
N1:M4-42	PHOTO	VSMOKE	1:M4-42 FLR 5 CENTRAL A - ELEV. 1 LOBBY			X	X	X		X		ON
N1:M4-43	PHOTO	VSMOKE	1:M4-43 FLR 5 CENTRAL A - ELEV. 4 LOBBY	X	X		X	X		X		ON
N1:M4-44	PHOTO	VSMOKE	1:M4-44 FLR 3 CENTRAL TWR A LOBBY WAITING				X	X		X		ON
N1:M4-45	PHOTO	VSMOKE	1:M4-45 FLR 1B - HALL BY SURGERY WAITING	X		X	X	X		X		ON
N1:M4-46	PHOTO	VSMOKE	1:M4-46 FLR 1E - HALL BY GIFT SHOP			X	X	X		X		ON
N1:M4-47	PHOTO	VSMOKE	1:M4-47 FLR 1E - CENTRAL HALL	X	X	X	X	X		X		ON
N1:M4-48	PHOTO	VSMOKE	1:M4-48 FLR 1E - HALL BESIDE CHAPEL						X	X		ON
N1:M4-49	PHOTO	VSMOKE	1:M4-49 FLR 1E - HALL BESIDE CHAPEL	X					X	X		ON
N1:M4-50	PHOTO	VSMOKE	1:M4-50 FLR 1E - BY HUMAN RESOURCES		X				X	X		ON
N1:M4-51			SPARE	X	X				X	X		ON
N1:M4-52	PHOTO	VSMOKE	1:M4-52 FLR 1E - BY HUMAN RESOURCES			X			X	X		ON
N1:M4-53	PHOTO	VSMOKE	1:M4-53 FLR 1B - ELEV. 1	X		X			X	X		ON
N1:M4-54	PHOTO	VSMOKE	1:M4-54 FLR 1B - ELEV.4 MACHINE RM			X	X		X	X		ON
N1:M4-55	HEAT	HEAT	1:M4-55 FLR 1B - ELEV.6 EQUIP. RM	X	X	X			X	X		ON
N1:M4-56	HEAT	HEAT	1:M4-56 FLR 1B - ELEV.6 IN ELEVATOR PIT				X	X	X	X		ON
N1:M4-57	HEAT	HEAT	1:M4-57 FLR 5 CENTRAL TWR A-ELEV.6 SHAFT	X			X	X	X	X		ON
N1:M4-58	PHOTO	VSMOKE	1:M4-58 FLR 1 CTRL TWR CVR. ELEV. LOBBY		X		X	X	X	X		ON
N1:M4-59	PHOTO	VSMOKE	1:M4-59 FLR 3 CENTRAL TWR A - BY RM 205	X	X		X	X	X	X		ON
N1:M4-60	PHOTO	VSMOKE	1:M4-60 FLR 3 CENTRAL TWR A - BY RM 304				X	X	X	X		ON
N1:M4-61	PHOTO	VSMOKE	1:M4-61 FLR 4 CENTRAL TWR A - BY RM 406	X			X	X	X	X		ON
N1:M4-62	PHOTO	VSMOKE	1:M4-62 FLR 5 CENTRAL TWR A-ELEV.6 LOBBY			X	X	X	X	X		ON
N1:M4-63	PHOTO	VSMOKE	1:M4-63 FLR 1E - MEDICAL STAFF LIBRARY	X	X	X	X	X	X	X		ON
N1:M4-64	PHOTO	VSMOKE	1:M4-64 FLR 1E - HALL BY ELEVATOR NO.6							X	X	ON
N1:M4-65	PHOTO	VSMOKE	1:M4-65 FLR 1E - HALL BY ELEVATOR NO.6	X						X	X	ON
N1:M4-66	PHOTO	VSMOKE	1:M4-66 FLR 1E - HALL BY ELEVATOR NO.6		X					X	X	ON
N1:M4-67	PHOTO	VSMOKE	1:M4-67 FLR 1E - HALL BY ELEVATOR NO.6	X	X					X	X	ON
N1:M4-68	PHOTO	VSMOKE	1:M4-68 FLR 1E - HALL BY ELEVATOR NO.6			X				X	X	ON
N1:M4-69	PHOTO	VSMOKE	1:M4-69 FLR 1E - HUMAN RESOURCES	X		X				X	X	ON
N1:M4-70	PHOTO	VSMOKE	1:M4-70 FLR 1E - HALL BESIDE ELR.		X	X				X	X	ON
N1:M4-71	PHOTO	VSMOKE	1:M4-71 FLR 1E - HALL BESIDE ELR.	X	X	X				X	X	ON
N1:M4-72	PHOTO	VSMOKE	1:M4-72 FLR 1E - HALL IN FRONT OF H.R.				X			X	X	ON
N1:M4-73	PHOTO	VSMOKE	1:M4-73 FLR 1E - HALL IN FRONT OF H.R.	X			X			X	X	ON
N1:M4-74	PHOTO	VSMOKE	1:M4-74 FLR 1 CTRL TWR HALL BY CAFETERIA		X		X			X	X	ON
N1:M4-75	PHOTO	VSMOKE	1:M4-75 FLR 1E - INFORMATION SYSTEMS	X	X		X			X	X	ON
N1:M4-76	PHOTO	VSMOKE	1:M4-76 FLR 1E - INFORMATION SYSTEMS				X	X		X	X	ON
N1:M4-77	PHOTO	VSMOKE	1:M4-77 FLR 1E - BY PHOTO LABS	X			X	X		X	X	ON
N1:M4-78	PHOTO	VSMOKE	1:M4-78 FLR 1E - HALL BY DISH ROOM				X	X	X	X	X	ON
N1:M4-79	PHOTO	VSMOKE	1:M4-79 FLR 1E - HALL BY DISH ROOM	X	X	X	X	X			X	ON
N1:M4-80	PHOTO	VSMOKE	1:M4-80 FLR 1E - HALL BY DISH ROOM						X	X	X	ON
N1:M4-81	PHOTO	VSMOKE	1:M4-81 FLR 1 CTRL TWR HALL BY CAFETERIA	X					X	X	X	ON
N1:M4-82	PHOTO	VSMOKE	1:M4-82 FLR 1E - HALL BY KITCHEN		X				X	X	X	ON
N1:M4-83	PHOTO	VSMOKE	1:M4-83 FLR 1E - HALL BY PHOTO	X	X				X	X	X	ON
N1:M4-84	PHOTO	VSMOKE	1:M4-84 FLR 1E - ENTRY HALL TO H.R.			X		X	X	X	X	ON
N1:M4-85	PHOTO	VSMOKE	1:M4-85 FLR 1E - HUMAN RESOURCES	X		X		X	X	X	X	ON
N1:M4-86	PHOTO	VSMOKE	1:M4-86 FLR 1E - HALL BY NPSC OFFICE			X	X	X	X	X	X	ON
N1:M4-87	PHOTO	VSMOKE	1:M4-87 FLR 1E - HALL BY NRSG. OFFICE	X	X	X		X	X	X	X	ON
N1:M4-88	PHOTO	VSMOKE	1:M4-88 FLR 1E - COPY RM BY STAFFING				X	X	X	X	X	ON
N1:M4-89	PHOTO	VSMOKE	1:M4-89 FLR 1E - OFFICE NEXT TO COPY RM	X			X	X	X	X	X	ON
N1:M4-90	PHOTO	VSMOKE	1:M4-90 FLR 1E - ELEV. DEMAND CTR		X		X	X	X	X	X	ON
N1:M4-91	PHOTO	VSMOKE	1:M4-91 FLR 5 CENTRAL A - ELEV.1&2 SHAFT	X	X		X	X	X	X	X	ON
N1:M4-92	RZAM	COMPER	1:M4-92 FLR 5B - CENTRAL B ELEV.4 SHAFT			X	X	X	X	X	X	ON
N1:M4-93	PHOTO	VSMOKE	1:M4-93 FLR 5 CENTRAL A - ELEV.6 SHAFT	X		X	X	X	X	X	X	ON
N1:M4-94	RZAM	COMPER	1:M4-95 FLR 1E - UTILITY PLANT-AHU 97-6		X	X	X	X	X	X	X	ON
N1:M4-95	RPHOTO	SDUCT	1:M4-96 FLR 1E - UTILITY PLANT-AHU 97-5	X	X	X	X	X	X	X	X	ON
N1:M4-96	RPHOTO	SDUCT	1:M4-97 FLR 1E - UTILITY PLANT-AHU 97-6							X	X	ON
N1:M4-97	RPHOTO	SDUCT	1:M4-98 FLR 1E - HALL BY STAFFING OFFICE	X						X	X	ON
N1:M4-98	PHOTO	VSMOKE	1:M4-99 FLR 1E - HALL BY STAFFING OFFICE		X					X	X	ON
N1:M4-99	PHOTO	VSMOKE	1:M4-100 FLR 1E - MECH RM BY COPY CTR	X	X					X	X	ON
N1:M4-100	RPHOTO	SDUCT	1:M4-101 FLR 1E - MECH RM BY COPY CTR			X				X	X	ON
N1:M4-101	RPHOTO	SDUCT	1:M4-101 FLR 1 CTRL TWR MECH RM/COPY CTR	X		X				X	X	ON
N1:M4-102	SDPAM	SDOVAL	1:M4-102 FLR 1 CTRL TWR MECH RM/COPY CTR		X	X				X	X	ON
N1:M4-103	SDPAM	SDOVAL	1:M4-103 FLR 1 CTR TWR MECH COPY CTR	X	X	X				X	X	ON
N1:M4-104	ADRPUL	PULL	1:M4-104 FLR 4 CENTRAL TWR A-BY RM 479						X	X	X	ON
N1:M4-105	RPHOTO	SDUCT	1:M4-105 FLR 1E - UTILITY PLANT - AHU 1A	X					X	X	X	ON
N1:M4-106	RPHOTO	SDUCT	1:M4-106 FLR 1E - UTILITY PLANT - AHU 1A		X				X	X	X	ON
N1:M4-107	RPHOTO	SDUCT	1:M4-107 FLR 1E - UTILITY PLANT - AHU 1C	X	X				X	X	X	ON
N1:M4-108	RPHOTO	SDUCT	1:M4-108 FLR 1E - UTILITY PLANT - AHU 1C						X	X	X	ON
N1:M4-109	PHOTO	VSMOKE	1:M4-109 FLR 4 VISION UTILITY HALLWAY	X					X	X	X	ON
N1:M4-110	SDFAM	RELAY	1:M4-110 AHU 1C FAN SHUTDOWN CONTROL						X	X	X	ON
N1:M4-111	SDFAM	RELAY	1:M4-111 AHU 1A FAN SHUTDOWN CONTROL	X	X	X	X		X	X	X	ON
N1:M4-112	PHOTO	VSMOKE	1:M4-112 FLR 4 CENTRAL A - CLEAN STORAGE						X	X	X	ON
N1:M4-113	SDFAM	RELAY	1:M4-113 HV-1 FAN SHUTDOWN CONTROL	X					X	X	X	ON
N1:M4-114	RPHOTO	SDUCT	1:M4-114 FLR 1E - BY AHU 1A IN PLANT		X				X	X	X	ON
N1:M4-115	RPHOTO	SDUCT	1:M4-115 FLR 1E - BY AHU 1A IN PLANT	X	X				X	X	X	ON
N1:M4-116	SDFAM	RELAY	1:M4-116 HV-2 KITCHEN MAKE-UP SHUTDOWN			X			X	X	X	ON
N1:M4-117	ADRPUL	PULL	1:M4-117 FLR 4 CENTRAL TWR A-BY RM 435		X		X		X	X	X	ON
N1:M4-118	RZAM	RELAY	1:M4-118 FLR 2 ELEVATOR #2 SMK CURTAIN			X	X		X	X	X	ON
N1:M4-119	RZAM	RELAY	1:M4-119 FLR 3 ELEVATOR #2 SMK CURTAIN	X	X	X			X	X	X	ON
N1:M4-120	RZAM	RELAY	1:M4-120 FLR 4 ELEVATOR #2 SMK CURTAIN				X	X	X	X	X	ON
N1:M4-121	RZAM	RELAY	1:M4-121 FLR 2 ELEVATOR #4 SMK CURTAIN	X			X	X	X	X	X	ON
N1:M4-122	RZAM	RELAY	1:M4-122 FLR 3 ELEVATOR #4 SMK CURTAIN		X		X	X	X	X	X	ON
N1:M4-123	RZAM	RELAY	1:M4-123 FLR 4 ELEVATOR #4 SMK CURTAIN	X	X		X	X	X	X	X	ON
N1:M4-124	PHOTO	VSMOKE	1:M4-124 FLR 4 CENTRAL TWR A - ELECT. RM				X	X	X	X	X	ON
N1:M4-125	RPHOTO	SDUCT	1:M4-125 FLR 4 DUCT IN CONSULT FSD	X		X	X	X	X	X	X	ON
N1:M4-126	RPHOTO	SDUCT	1:M4-126 FLR 4 DUCT IN CONSULT FSD		X	X	X	X	X	X	X	ON
N1:M4-127	RPHOTO	SDUCT	1:M4-127 FLR 4 DUCT IN WAITING	X	X	X	X	X	X	X	X	ON

NOTE: THE LABELS SHOWN ABOVE WILL BE USED FOR PROGRAMMING PURPOSES.
THE LABELS ARE BASED UPON INFORMATION SHOWN ON THE ARCHITECTURAL DRAWINGS.
ANY CHANGES TO THESE LABELS MUST BE NOTED ON THE SUBMITTAL REVIEW, PRIOR TO PROGRAMMING.
POINTS SHOWN IN ITALIC TEXT REFER TO EXISTING DEVICES.

MAPNET CHANNEL N1:M5				SWITCH SETTINGS								
Address	Device Type	Point Type	Location Description	1	2	3	4	5	6	7	8	9
N1:M5-1	ADRPUL	PULL	1:M5-1 FLR 1 W - WEST MECHANICAL RM	X								ON
N1:M5-2	ADRPUL	PULL	1:M5-2 FLR 1B - WEST MECHANICAL HALL		X							ON
N1:M5-3	PHOTO	VSMOKE	1:M5-3 FLR 1E - HALL BY MORGUE	X	X							ON
N1:M5-4	ADRPUL	PULL	1:M5-4 FLR 1 CENTRAL TWR SUPPORT SERVICES			X						ON
N1:M5-5	ADRPUL	PULL	1:M5-5 FLR 1B - SAME DAY SURG. POD B	X		X						ON
N1:M5-6	ADRPUL	PULL	1:M5-6 FLR 1B - DAY SURGERY NRSG. STAT B		X	X						ON
N1:M5-7	RZAM	COMPER	1:M5-7 AHU 97-5	X	X	X						ON
N1:M5-8	RZAM	COMPER	1:M5-8 SMOKE DAMPER AHU 97-7				X					ON
N1:M5-9	RZAM	COMPER	1:M5-9 SMOKE DAMPER AHU 97-3	X			X					ON
N1:M5-10	RZAM	DHOLDER	1:M5-10 DAY SURGERY AUTO DOORS		X		X					ON
N1:M5-11	RZAM	RELAY	1:M5-11 FLR 1 CENTRAL TWR HALL EAST EXIT	X	X		X					ON
N1:M5-12	RZAM	RELAY	1:M5-12 ELEVATOR #3 PRIMARY RECALL			X	X					ON
N1:M5-13	RZAM	RELAY	1:M5-13 ELEVATOR #3 ALTERNATE RECALL	X		X	X					ON
N1:M5-14	GEMAM	SD	1:M5-14 ELEVATOR #3 TAMPER IN PIT		X	X	X					ON
N1:M5-15	PHOTO	VSMOKE	1:M5-15 FLR 4 CENTRAL TWR A CLN STOR	X	X	X	X					ON
N1:M5-16			SPARE				X					ON
N1:M5-17	RPHOTO	SDUCT	1:M5-17 FLR 1W - WEST MECH AHU 97-3	X			X					ON
N1:M5-18	RPHOTO	SDUCT	1:M5-18 FLR 1W - WEST MECH AHU 97-5		X		X					ON
N1:M5-19	RPHOTO	SDUCT	1:M5-19 FLR 1W - WEST MECH AHU 97-7	X	X		X					ON
N1:M5-20	RPHOTO	SDUCT	1:M5-20 FLR 1W - WEST MECH AHU 97-3			X	X					ON
N1:M5-21	RPHOTO	SDUCT	1:M5-21 FLR 1W - WEST MECH AHU 97-5	X		X	X					ON
N1:M5-22	RPHOTO	SDUCT	1:M5-22 FLR 1W - WEST MECH AHU 97-7		X	X	X					ON
N1:M5-23	PHOTO	HEAT	1:M5-23 FLR 1W - WEST MECH. BACK RM	X	X	X						ON
N1:M5-24	PHOTO	HEAT	1:M5-24 FLR 1W - WEST MECHANICAL				X	X				ON
N1:M5-25	PHOTO	HEAT	1:M5-25 FLR 1W - WEST MECH. EN ENTRY	X			X	X				ON
N1:M5-26	PHOTO	HEAT	1:M5-26 FLR 1W - WEST MECH. DETECTOR		X		X	X				ON
N1:M5-27	PHOTO	HEAT	1:M5-27 FLR 1W - ELEV. NO.3 EQUIP. RM	X	X		X	X				ON
N1:M5-28	PHOTO	HEAT	1:M5-28 FLR 1W - ELEV. NO.3 PIT DETECTOR			X	X	X				ON
N1:M5-29	PHOTO	HEAT	1:M5-29 CTR TWR ELEV.3 TOP OF SHAFT	X		X	X	X				ON
N1:M5-30	GEMAM	UTILITY	1:M5-30 GRADE SPK W/E MONITOR		X	X	X	X				ON
N1:M5-31	RZAM	FIRELAT	1:M5-31 EAST CORR EMERGENCY EXIT RELAY	X	X	X	X	X				ON
N1:M5-32	PHOTO	VSMOKE	1:M5-32 FLR 2 CENTRAL TWR A - BY RM 315							X		ON
N1:M5-33			SPARE	X						X		ON
N1:M5-34	PHOTO	VSMOKE	1:M5-34 FLR 3 CENTRAL TWR A - BY RM 315		X					X		ON
N1:M5-35			SPARE	X	X					X		ON
N1:M5-36	PHOTO	VSMOKE	1:M5-36 FLR 4 CENTRAL TWR A - BY RM 426			X				X		ON
N1:M5-37			SPARE	X		X				X		ON
N1:M5-38	PHOTO	VSMOKE	1:M5-38 FLR 5 CENTRAL TWR A - BY RM 530		X	X				X		ON
N1:M5-39	PHOTO	VSMOKE	1:M5-39 CTR TWR ELEV.3 TOP OF SHAFT	X	X					X		ON
N1:M5-40	PHOTO	VSMOKE	1:M5-40 FLR 1W - ELEV. NO.3 EQUIP. RM				X			X		ON
N1:M5-41	PHOTO	VSMOKE	1:M5-41 FLR 1W - CENTRAL TWR ELEVATOR LOBBY	X			X			X		ON
N1:M5-42	PHOTO	VSMOKE	1:M5-42 FLR 1W - SUPPORT SERVICES		X		X			X		ON
N1:M5-43	PHOTO	VSMOKE	1:M5-43 FLR 1W - SUPPORT SERVICES	X	X		X			X		ON
N1:M5-44	PHOTO	VSMOKE	1:M5-44 FLR 1W - SUPPORT SERVICES			X	X			X		ON
N1:M5-45	PHOTO	VSMOKE	1:M5-45 FLR 1W - CLASS ROOM NO.4	X		X	X			X		ON
N1:M5-46	PHOTO	VSMOKE	1:M5-46 FLR 1W - SUPPORT SERVICES		X	X	X			X		ON
N1:M5-47	PHOTO	VSMOKE	1:M5-47 FLR 1W - SUPPORT SERVICES	X	X	X	X			X		ON
N1:M5-48	PHOTO	VSMOKE	1:M5-48 FLR 1 CENTRL TWR SP SUPPORT SVCS				X	X		X		ON
N1:M5-49	PHOTO	VSMOKE	1:M5-49 FLR 1W - SUPPORT SERVICES	X			X	X		X		ON
N1:M5-50	PHOTO	VSMOKE	1:M5-50 FLR 1W - SUPPORT SERVICES		X		X	X		X		ON
N1:M5-51	PHOTO	VSMOKE	1:M5-51 FLR 1W - HALL BY MED. STAFF OFF.	X	X		X	X		X		ON
N1:M5-52	PHOTO	VSMOKE	1:M5-52 FLR 1W - HALL BY MED. STAFF OFF.			X	X	X		X		ON
N1:M5-53	PHOTO	VSMOKE	1:M5-53 FLR 1W - HALL BY MED. STAFF OFF.	X		X	X	X		X		ON
N1:M5-54	PHOTO	VSMOKE	1:M5-54 FLR 1 CTRL TWR SUPPORT SERVICES		X	X	X	X		X		ON
N1:M5-55	PHOTO	VSMOKE	1:M5-55 FLR 1 CTRL TWR SUPPORT SERVICES	X	X	X		X		X		ON
N1:M5-56	PHOTO	VSMOKE	1:M5-56 FLR 1W - HALL BY SAME DAY SURG.				X	X		X		ON
N1:M5-57	PHOTO	VSMOKE	1:M5-57 FLR 1W - HALL BY SAME DAY SURG.	X			X	X		X		ON
N1:M5-58	PHOTO	VSMOKE	1:M5-58 FLR 1W - HALL BY SAME DAY SURG.		X		X	X		X		ON
N1:M5-59	PHOTO	VSMOKE	1:M5-59 FLR 1W - HALL BY SAME DAY SURG.	X	X		X	X		X		ON
N1:M5-60	PHOTO	VSMOKE	1:M5-60 FLR 1W - HALL BY SAME DAY SURG.				X	X		X		ON
N1:M5-61	PHOTO	VSMOKE	1:M5-61 FLR 1W - SURGERY DOC'S LOUNGE	X			X	X		X		ON
N1:M5-62	PHOTO	VSMOKE	1:M5-62 FLR 1W - O.R. PRE-OP OVERFLOW		X		X	X		X		ON
N1:M5-63	PHOTO	VSMOKE	1:M5-63 FLR 1W - O.R. PRE-OP OVERFLOW	X	X		X	X		X		ON
N1:M5-64	PHOTO	VSMOKE	1:M5-64 FLR 1W - O.R. PRE-OP OVERFLOW							X		ON
N1:M5-65	PHOTO	VSMOKE	1:M5-65 FLR 1W - O.R. PRE-OP OVERFLOW	X						X		ON
N1:M5-66	PHOTO	VSMOKE	1:M5-66 FLR 1W - ENDOSCOPY SUITE		X					X		ON
N1:M5-67	PHOTO	VSMOKE	1:M5-67 FLR 1W - ENDOSCOPY SUITE	X	X					X		ON
N1:M5-68	PHOTO	VSMOKE	1:M5-68 FLR 1W - ENDOSCOPY SUITE			X				X		ON
N1:M5-69	PHOTO	VSMOKE	1:M5-69 FLR 1W - HALL BY CA SUITE	X		X				X		ON
N1:M5-70	PHOTO	VSMOKE	1:M5-70 FLR 1W - HALL BY BED STORAGE		X	X				X		ON
N1:M5-71	PHOTO	VSMOKE	1:M5-71 FLR 1W - HALL BY BED STORAGE	X	X	X				X		ON
N1:M5-72	PHOTO	VSMOKE	1:M5-72 FLR 1W - HALL BY BED STORAGE				X			X		ON
N1:M5-73	PHOTO	VSMOKE	1:M5-73 FLR 1W - HALL BY MICROBIOLOGY	X			X			X		ON
N1:M5-74	PHOTO	VSMOKE	1:M5-74 FLR 1 CENTRAL TWR MICROBIOLOGY		X		X			X		ON
N1:M5-75			SPARE	X	X		X			X		ON
N1:M5-76	PHOTO	VSMOKE	1:M5-76 FLR 1W - MICROBIOLOGY LAB			X	X			X		ON
N1:M5-77	PHOTO	VSMOKE	1:M5-77 FLR 1W - CENTRAL TWR A PIT RM 402	X		X	X			X		ON
N1:M5-78	GEMAM	WATER	1:M5-78 FLR 1W - BY BED STORAGE - FLOW		X	X				X		ON
N1:M5-79	PHOTO	VSMOKE	1:M5-79 FLR 1 CENTRAL TWR NEW CATH LAB	X	X	X	X			X		ON
N1:M5-80	PHOTO	VSMOKE	1:M5-80 FLR 1 CENTRAL TWR CATH LAB				X	X		X		ON
N1:M5-81	PHOTO	VSMOKE	1:M5-81 FLR 1 CENTRAL TWR CATH LAB	X			X	X		X		ON
N1:M5-82	PHOTO	VSMOKE	1:M5-82 FLR 1W - HALL BY SURGERY WAITING		X		X	X		X		ON
N1:M5-83	PHOTO	VSMOKE	1:M5-83 FLR 1W - HALL BY SURGERY WAITING	X	X		X	X		X		ON
N1:M5-84	PHOTO	VSMOKE	1:M5-84 FLR 1W - SURGERY WAITING AREA			X	X	X		X		ON
N1:M5-85	PHOTO	VSMOKE	1:M5-85 FLR 1W - SAME DAY SURG. BAY 5	X		X	X	X		X		ON
N1:M5-86	PHOTO	VSMOKE	1:M5-86 FLR 1W - SAME DAY SURG. BAY 6		X	X	X	X		X		ON
N1:M5-87	PHOTO	VSMOKE	1:M5-87 FLR 1W - SAME DAY SURG. BAY 1	X	X	X		X		X		ON
N1:M5-88	PHOTO	VSMOKE	1:M5-88 FLR 1W - HALL BY SAME DAY SURG.				X	X		X		ON
N1:M5-89	PHOTO	VSMOKE	1:M5-89 FLR 1W - SAME DAY SURG. BAY 8	X			X	X		X		ON
N1:M5-90	PHOTO	VSMOKE	1:M5-90 FLR 1W - SAME DAY SURG. BAY 9		X		X	X		X		ON
N1:M5-91	PHOTO	VSMOKE	1:M5-91 FLR 1W - SAME DAY SURG. OFFICE	X	X		X	X		X		ON
N1:M5-92	PHOTO	VSMOKE	1:M5-92 FLR 1W - SAME DAY SURG. BAY 11			X	X	X		X		ON
N1:M5-93	PHOTO	VSMOKE	1:M5-93 FLR 1W - MEDICAL STAFF OFFICE	X		X	X	X		X		ON
N1:M5-94	PHOTO	VSMOKE	1:M5-94 FLR 1W - MEDICAL STAFF OFFICE		X	X	X	X		X		ON
N1:M5-95	PHOTO	VSMOKE	1:M5-95 FLR 1W - SAME DAY SURG. BAY 12	X	X	X	X	X		X		ON
N1:M5-96	PHOTO	VSMOKE	1:M5-96 FLR 1W - SAME DAY SURG. BAY 10							X		ON
N1:M5-97	PHOTO	VSMOKE	1:M5-97 FLR 1W - SAME DAY SURG. BAY 10	X						X		ON
N1:M5-98	PHOTO	VSMOKE	1:M5-98 FLR 4 CENTRAL TWR A - BY RM 435		X					X		ON
N1:M5-99	PHOTO	VSMOKE	1:M5-99 FLR 1W - BED STORAGE RM	X	X					X		ON
N1:M5-100	PHOTO	VSMOKE	1:M5-100 FLR 1W - BED STORAGE RM			X				X		ON
N1:M5-101	PHOTO	VSMOKE	1:M5-101 FLR 1 CENTRAL TWR A - BY RM 401	X		X				X		ON
N1:M5-102	GEMAM	UTILITY	1:M5-102 FLR 1 SPARE 2 PT I/O		X	X				X		ON
N1:M5-103	RZAM	RELAY	1:M5-

FILE PATH: G:\Medical Center of Aurora\1501 S Potomac - Aurora South\South Tower - Node 1\20-MCOA Surgery Renovations FAS-2015-982434501\FIRE\Phase 1-3\FA-603.dwg LAST SAVED BY: CMADDEN LAST PRINTED: 8/24/2015 1:00:17 PM 24" x 36" - Arch D Size

MEDICAL CENTER OF AURORA SOUTH TOWER TRANSPONDER 3 4100es XPDR

Module	Qty	Description		Standby Current	Total Standby	Alarm Current	Total Alarm
Panel Equipment							
4100-9600	1	BASIC TRANSPONDER	*	0.0870	0.0870	0.0870	0.0870
4100-0634	1	POWER DISTRIBUTION MODULE 120V		0.0000	0.0000	0.0000	0.0000
4100-5311	1	ENHANCED POWER SUPPLY, 3 CHANNELS, IDNet, 120V		0.2250	0.2250	0.4900	0.4900
		Panel Totals			0.3120		0.5770
IDNet Addressable Devices (SLC)							
4090-9002	29	IDNET RELAY IAM	*				
4098-9714	42	TRUEALARM PHOTO SMOKE SENSOR					
△2 4098-9755	9	TRUEALARM DUCT SMOKE SENSOR W/O RELAY OUTPUT	*				
4098-9756	10	TRUEALARM DUCT SMOKE SENSOR W/ RELAY OUTPUT	*				
4009-9201	1	4009 IDNET NAC EXTENDER, 120 VAC	*				
4098-9792	42	TRUEALARM SENSOR BASE	*				
Miscellaneous Peripheral Devices That May Require System Power							
4098-9843	10	ENCAPSULATED RELAY PAM-SD		0.0000	0.0000	0.0150	0.1500
4098-9756	10	TRUEALARM DUCT SMOKE SENSOR W/ RELAY OUTPUT		0.0030	0.0300	0.0150	0.1500
2088-9021	14	ENCAPSULATED RELAY PAM-1		0.0000	0.0000	0.0150	0.2100
Notification Appliances							
49MTV-WRF	13	MULTI-TONE A/V, RED, WALL MOUNT	15	0.0016	0.0208	0.1450	1.8850
49MTV-WRF	1	MULTI-TONE A/V, RED, WALL MOUNT	30	0.0016	0.0016	0.1630	0.1630
49MTV-WRF	2	MULTI-TONE A/V, RED, WALL MOUNT	75	0.0016	0.0032	0.1980	0.3960
49VO-APPLW	4	VO APPLIANCE ONLY WALL MT	30	0.0008	0.0032	0.0570	0.2280
49VO-WRF	10	VO, WALL MT, RED, FIRE LABEL	15	0.0008	0.0080	0.0470	0.4700
49VO-WRF	2	VO, WALL MT, RED, FIRE LABEL	30	0.0008	0.0016	0.0570	0.1140
		Peripheral Totals			0.0684		3.7660
		Added Current for EPS Conversion of 24 to 29 Volt IDNac Devices			0.0000		1.8563
		RUI Totals	0		0.0000		0.0000
		Address Totals	91 Addresses		0.0728		0.0910
		System Totals*:		Standby	0.4532	Alarm	6.2903

* Device Address current draw included below (See Additional Current Draws):

Battery Set #1 (Cabinet/Charger #1)

			Standby Current	Standby Total	Alarm Current	Alarm Total
Select ALL Power Supplies on this battery set:						
EPS-1				0.3804		4.3430
			Sub Total	0.3804		4.3430
Additional Current Draws:						
IDNac Current Boost for 29vdc Regulated Output **				0.0000		1.8563
MAPNET/IDNet Device Address Communication Current		91	x 0.000800	= 0.0728	x 0.001000	= 0.0910
			Sub Total	0.4532		6.2903
Spare addressable point capacity	20%	19	x 0.0008	= 0.0152	x 0.001	= 0.0190
			Total	0.4684		6.3093
Standby Time =	4	Hrs	x 0.4684	= 1.8736	Standby Ah	
Alarm Time =	15	Min	0.25 x 6.3093	= 1.5773	Alarm Ah	
				3.4509		
Additional Spare Battery Capacity =	20%		+	0.6902		
				4.1411		
Battery Discharge Factor =	20%		+	0.8282		
Minimum Battery Required	2081-9272 6.2AH (2x)			4.9693		
Battery Supplied	2081-9287 25AH (2x)					

IDNET CHANNEL N1:T3:M10

Rev	Address	Device Type	Point Type	Location Description	1	2	3	4	5	6	7	8		9
	N1:T3:M10-1	PHOTO	SMOKE	FLR 1W ELEC 1-SS006 1:M10-1	X								ON	
	N1:T3:M10-2	PHOTO	SMOKE	FLR 1W ELEC 1-SS010 1:M10-2		X							ON	
	N1:T3:M10-3	PHOTO	SMOKE	FLR 1W CORR 1-SS043 1:M10-3	X	X							ON	
	N1:T3:M10-4	PHOTO	SMOKE	FLR 1W COMM 1-SS007 1:M10-4			X						ON	
	N1:T3:M10-5	PHOTO	SMOKE	FLR 1W EQ STG 1-SS001 1:M10-5	X		X						ON	
	N1:T3:M10-6	PHOTO	SMOKE	FLR 1W EQ STG 1-SS001 1:M10-6		X	X						ON	
	N1:T3:M10-7	PHOTO	SMOKE	FLR 1W EQ STG 1-SS001 1:M10-7	X	X	X						ON	
	N1:T3:M10-8	PHOTO	SMOKE	FLR 1W EQ STG 1-SS001 1:M10-8				X					ON	
	N1:T3:M10-9	PHOTO	SMOKE	FLR 1W CO2 MANIFOLD 1-SS008 1:M10-9	X			X					ON	
	N1:T3:M10-10	PHOTO	SMOKE	FLR 1W SURGERY VENDOR 1-SS009 1:M10-10		X		X					ON	
	N1:T3:M10-11	PHOTO	SMOKE	FLR 1W IR STOR 1-SS005 1:M10-11	X	X		X					ON	
△2	N1:T3:M10-12	RIAM	CDAMPER	FLR 1W EQUIP 1-SS002 SUP FSD 1:M10-12			X	X					ON	
△2	N1:T3:M10-13	RIAM	CDAMPER	FLR 1W OFFICE 1-SS003 RET FSD 1:M10-13	X		X	X					ON	
	N1:T3:M10-14	PHOTO	LSDUCT	FLR 1W EQUIP 1-SS002 SUP FSD 1:M10-14		X	X	X					ON	
	N1:T3:M10-15	PHOTO	LSDUCT	FLR 1W OFFICE 1-SS003 RET FSD 1:M10-15	X	X	X	X					ON	
	N1:T3:M10-16	PHOTO	LSDUCT	FLR 1W EQSTG 1-SS001 RET FSD 1:M10-16					X				ON	
	N1:T3:M10-17	PHOTO	LSDUCT	FLR 1W EQSTG 1-SS001 RTU-1 SUP 1:M10-17	X				X				ON	
	N1:T3:M10-18	PHOTO	LSDUCT	ROOF RTU-1 RET 1:M10-18		X			X				ON	
	N1:T3:M10-19	PHOTO	LSDUCT	ROOF RTU-1 OUTSIDE AIR M1-19	X	X			X				ON	
	N1:T3:M10-20	RIAM	RELAY	ROOF RTU-1 RET DET TO DDC 1:M10-20			X		X				ON	
	N1:T3:M10-21	RIAM	RELAY	ROOF RTU-1 SUP DET TO DDC 1:M10-21	X		X		X				ON	
	N1:T3:M10-22	RIAM	RELAY	ROOF RTU-1 OA DET TO DDC 1:M10-22		X	X		X				ON	
	N1:T3:M10-23	RIAM	RELAY	ROOF RTU-1 EXH FSD TO DDC 1:M10-23	X	X	X		X				ON	
	N1:T3:M10-24	RIAM	RELAY	ROOF RTU-1 ALARM TO DDC 1:M10-24				X	X				ON	
	N1:T3:M10-25	NAC4PT	SIGNAL	FLR 1W ELEC 1-SS010 NAC#1 1:M10-25	X			X	X				ON	
	N1:T3:M10-26	PHOTO	SMOKE	FLR 1W CORR 1-SS041 1:M10-26		X		X	X				ON	
	N1:T3:M10-27	PHOTO	SMOKE	FLR 1W CORR 1-SS041 1:M10-27	X	X		X	X				ON	
	N1:T3:M10-28	PHOTO	SMOKE	FLR 1W CORR 1-SS040 1:M10-28			X	X	X				ON	
	N1:T3:M10-29	PHOTO	SMOKE	FLR 1W CORR 1-SS040 1:M10-29	X		X	X	X				ON	
	N1:T3:M10-30	PHOTO	SMOKE	FLR 1W CORR 1-SS040 1:M10-30		X	X	X	X				ON	
	N1:T3:M10-31	RIAM	RRELAY	FLR 1W CORR 1-SS043 ACC CNTL 1:M10-31	X	X	X	X	X				ON	
	N1:T3:M10-32	RIAM	DHOLDER	FLR 1W CORR 1-SS043 DOOR CNTL 1:M10-32						X			ON	
△2	N1:T3:M10-33	RIAM	CDAMPER	FLR 1W EQSTG 1-SS001 RET FSD 1:M10-33	X					X			ON	
	N1:T3:M10-34			SPARE		X				X			ON	
	N1:T3:M10-35	RIAM	DHOLDER	FLR 1W CORR 1-SS019A DOOR CNTL 1:M10-35	X	X				X			ON	
	N1:T3:M10-36	PHOTO	SMOKE	FLR 1W CORR 1-SS019A @CORR 041 1:M10-36			X			X			ON	
	N1:T3:M10-37	PHOTO	SMOKE	FLR 1W CORR 1-SS019A @CORR 019 1:M10-37	X		X			X			ON	
	N1:T3:M10-38	PHOTO	SMOKE	FLR 1W CORR 1-SS019 @CORR 019A 1:M10-38		X	X			X			ON	
	N1:T3:M10-39	PHOTO	SMOKE	FLR 1W CORR 1-SS019 @CORR 014 1:M10-39	X	X	X			X			ON	
	N1:T3:M10-40	PHOTO	SMOKE	FLR 1W PUMP 1-SS018 1:M10-40				X		X			ON	
	N1:T3:M10-41	PHOTO	SMOKE	FLR 1W SOIL UTIL 1-SS020 1:M10-41	X			X		X			ON	
	N1:T3:M10-42	PHOTO	SMOKE	FLR 1W CORR 1-SS014 @SOIL UTIL 1:M10-42		X		X		X			ON	
	N1:T3:M10-43	PHOTO	SMOKE	FLR 1W CORR 1-SS014 @OR 10 1:M10-43	X	X		X		X			ON	
	N1:T3:M10-44	PHOTO	SMOKE	FLR 1W CORR 1-SS014 @EQ STG 1:M10-44			X	X		X			ON	
	N1:T3:M10-45	PHOTO	SMOKE	FLR 1W ISOL1-PA03 1:M10-45	X		X	X		X			ON	
	N1:T3:M10-46	PHOTO	SMOKE	FLR 1W ELEC 1-SS022 1:M10-46		X	X	X		X			ON	
	N1:T3:M10-47	PHOTO	SMOKE	FLR 1W VOICE/DATA 1:M10-47	X	X	X	X		X			ON	
	N1:T3:M10-48	PHOTO	SMOKE	FLR 1W EQ STG 1-SS012 1:M10-48					X	X			ON	
	N1:T3:M10-49	PHOTO	SMOKE	FLR 1W ANES. WK 1-SS012A 1:M10-49	X				X	X			ON	
	N1:T3:M10-50	PHOTO	SMOKE	FLR 1W OR 10 1-SS015 NE 1:M10-50		X			X	X			ON	
	N1:T3:M10-51	PHOTO	SMOKE	FLR 1W OR 10 1-SS015 SW 1:M10-51	X	X			X	X			ON	
	N1:T3:M10-52	PHOTO	SMOKE	FLR 1W OR 9 1-SS017 SE 1:M10-52			X		X	X			ON	
	N1:T3:M10-53	PHOTO	SMOKE	FLR 1W OR 9 1-SS017 NW 1:M10-53	X		X		X	X			ON	
△2	N1:T3:M10-54	RPHOTO	LSDUCT	FLR 1W 1-SS041 RTU1 SUP FSD 1:M10-54		X	X		X	X			ON	
△2	N1:T3:M10-55	RPHOTO	LSDUCT	FLR 1W 1-SS019A RTU1 RET FSD 1:M10-55	X	X	X		X	X			ON	
△2	N1:T3:M10-56	RPHOTO	LSDUCT	FLR 1W OR 9 1-SS017 SUP FSD 1:M10-56				X	X	X			ON	
△2	N1:T3:M10-57	RPHOTO	LSDUCT	FLR 1W OR 9 1-SS017 SUP FSD 1:M10-57	X			X	X	X			ON	
△2	N1:T3:M10-58	RPHOTO	LSDUCT	FLR 1W ELEC 1-PA05 SUP FSD 1:M10-58		X		X	X	X			ON	
△2	N1:T3:M10-59	RPHOTO	LSDUCT	FLR 1W OR 10 1-SS015 RET FSD 1:M10-59	X	X		X	X	X			ON	
△2	N1:T3:M10-60	RPHOTO	LSDUCT	FLR 1W OR 10 1-SS015 SUP FSD 1:M10-60			X	X	X	X			ON	
△2	N1:T3:M10-61	RPHOTO	LSDUCT	FLR 1W EQ STG 1-SS012 RET FSD 1:M10-61	X		X	X	X	X			ON	
△2	N1:T3:M10-62	RPHOTO	LSDUCT	FLR 1W EQ STG 1-SS012 SUP FSD 1:M10-62		X	X	X	X	X			ON	
△2	N1:T3:M10-63	RPHOTO	LSDUCT	FLR 1W EVS SUP FSD 1:M10-63	X	X	X	X	X	X			ON	
	N1:T3:M10-64	RIAM	RRELAY	FLR 1W CORR 1-SS019A ACC CNTL 1:M10-64							X		ON	
	N1:T3:M10-65	RIAM	DHOLDER	FLR 1W CORR 1-SS019 S DR CNTL 1:M10-65	X						X		ON	
	N1:T3:M10-66	RIAM	DHOLDER	FLR 1W CORR 1-SS019 N DR CNTL 1:M10-66		X					X		ON	
	N1:T3:M10-67	RIAM	RRELAY	FLR 1W CORR 1-SS014 ACC CNTL 1:M10-67	X	X					X		ON	
	N1:T3:M10-68	PHOTO	LSDUCT	ROOF RTU-2 SUP 1:M10-68 1:M10-68			X				X		ON	
	N1:T3:M10-69	PHOTO	LSDUCT	ROOF RTU-2 RET 1:M10-69 1:M10-69	X		X				X		ON	
	N1:T3:M10-70	PHOTO	LSDUCT	ROOF RTU-2 OUTSIDE AIR 1:M10-70		X	X				X		ON	
	N1:T3:M10-71	RIAM	RELAY	ROOF RTU-2 RET DET TO DDC 1:M10-71	X	X	X				X		ON	
	N1:T3:M10-72	RIAM	RELAY	ROOF RTU-2 SUP DET TO DDC 1:M10-72				X			X		ON	
	N1:T3:M10-73	RIAM	RELAY	ROOF RTU-2 OA DET TO DDC 1:M10-73	X			X			X		ON	
	N1:T3:M10-74	RIAM	RELAY	ROOF RTU-2 EXH FSD TO DDC 1:M10-74		X		X			X		ON	
	N1:T3:M10-75	RIAM	RELAY	ROOF RTU-2 ALARM TO DDC 1:M10-75	X	X		X			X		ON	
	N1:T3:M10-76	RIAM	RELAY	ROOF RTU-1 OR 9 ALARM TO DDC 1:M10-76			X	X			X		ON	
	N1:T3:M10-77	RIAM	RELAY	ROOF RTU-1 OR 10 ALARM TO DDC 1:M10-77	X		X	X			X		ON	
	N1:T3:M10-78	RIAM	DHOLDER	FLR 1W OR 9 1-SS017 DOOR CNTL 1:M10-78		X	X	X			X		ON	
	N1:T3:M10-79	RIAM	DHOLDER	FLR 1W OR 10 1-SS018 DOOR CNTL 1:M10-79	X	X	X	X			X		ON	
	N1:T3:M10-80	RIAM	DHOLDER	FLR 1W CORR 1-SS014 DOOR CNTL 1:M10-80					X		X		ON	
	N1:T3:M10-81			SPARE	X				X		X		ON	
	N1:T3:M10-82			SPARE		X			X		X		ON	
	N1:T3:M10-83			SPARE	X	X			X		X		ON	
	N1:T3:M10-84	PHOTO	SMOKE	FLR 1W OR 8 (CVOR) 1-SS024 SW 1:M10-84			X		X		X		ON	
	N1:T3:M10-85	PHOTO	SMOKE	FLR 1W OR 8 (CVOR) 1-SS024 NE 1:M10-85	X		X		X		X		ON	
	N1:T3:M10-86	PHOTO	SMOKE	FLR 1W SUB STERILE 1-SS027 1:M10-86		X	X		X		X		ON	
	N1:T3:M10-87	PHOTO	SMOKE	FLR 1W PUMP 1-SS025 1:M10-87	X	X	X		X		X		ON	
	N1:T3:M10-88	PHOTO	SMOKE	FLR 1W OR 7 (CVOR) 1-SS026 SW 1:M10-88				X	X		X		ON	
	N1:T3:M10-89	PHOTO	SMOKE	FLR 1W OR 7 (CVOR) 1-SS026 NE 1:M10-89	X			X	X		X		ON	
	N1:T3:M10-90	RIAM	RELAY	ROOF RTU-1 OR 8 ALARM TO DDC 1:M10-90		X		X	X		X		ON	
	N1:T3:M10-91	RIAM	RELAY	ROOF RTU-1 OR 7 ALARM TO DDC 1:M10-91	X	X		X	X		X		ON	
	N1:T3:M10-92	RIAM	DHOLDER	FLR 1W OR 8 1-SS024 DOOR CNTL 1:M10-92			X	X	X		X		ON	
	N1:T3:M10-93	RIAM	DHOLDER	FLR 1W OR 7 1-SS0026 DOOR CNTL 1:M10-93	X		X	X	X		X		ON	
	N1:T3:M10-94	PHOTO	SMOKE	FLR 1W CORR 1-SS029 @OR 8 1:M10-94		X	X	X	X		X		ON	
	N1:T3:M10-95	PHOTO	SMOKE	FLR 1W CORR 1-SS029 @OR 7 1:M10-95	X	X	X	X	X		X		ON	
	N1:T3:M10-96			SPARE						X	X		ON	
	N1:T3:M10-97			SPARE	X					X	X		ON	
	N1:T3:M10-98			SPARE		X				X	X		ON	
	N1:T3:M10-99			SPARE	X	X				X	X		ON	
	THRU												ON	
	N1:T3:M10-250			SPARE		X		X	X	X	X	X	ON	

NOTE: THE LABELS SHOWN ABOVE WILL BE USED FOR PROGRAMMING PURPOSES.
THE LABELS ARE BASED UPON INFORMATION SHOWN ON THE ARCHITECTURAL DRAWINGS.
ANY CHANGES TO THESE LABELS MUST BE NOTED ON THE SUBMITTAL REVIEW, PRIOR TO PROGRAMMING.
POINTS SHOWN IN ITALIC TEXT REFER TO EXISTING DEVICES.

MEDICAL CENTER OF AURORA SOUTH TOWER TRANSPONDER 3 – EPS-1 CIRCUIT SUMMARY & VOLTAGE DROP

Channel	Description	Alarm Current	% Drop	Unit Load*	Wire Length	Spare Current	Spare VoltageDrop
N1:T3:A1:1	FLR 1W OR 7-8, EQ STO	1.747A	2.12%	25	639	42%	90%
N1:T3:A1:2	FLR 1W OR 9-10	1.509A	4.78%	23	545	50%	77%
N1:T3:A1:3	SPARE	0.000A	0.00%	0	754	100%	100%

POINTS SHOWN IN ITALIC TEXT REFER TO EXISTING DEVICES.

N1:T3:A1: ENHANCED POWER SUPPLY – CHANNEL 1

IDNac Number	Device Type	PID	Candela	Custom Label (Max 40 Characters)	1								
N1:T3:A1:1-1	VO	49VO-WRF	30cd	FLR 1W ELEC 1-SS006 1:A1:1-1	X								ON
N1:T3:A1:1-2	VO	49VO-WRF	15cd	FLR 1W ELEC 1-SS010 1:A1:1-2		X							ON
N1:T3:A1:1-3	AV	49MTV-WRF	15cd	FLR 1W CORR 1-SS043 1:A1:1-3	X	X							ON
N1:T3:A1:1-4	AV	49MTV-WRF	15cd	FLR 1W COMM 1-SS007 1:A1:1-4			X						ON
N1:T3:A1:1-5	AV	49MTV-WRF	75cd	FLR 1W EQ STG 1-SS001 1:A1:1-5	X		X						ON
N1:T3:A1:1-6	AV	49MTV-WRF	30cd	FLR 1W EQ STG 1-SS001 1:A1:1-6		X	X						ON
N1:T3:A1:1-7	VO	49VO-WRF	30cd	FLR 1W EQ STG 1-SS001 1:A1:1-7	X	X	X						ON
N1:T3:A1:1-8	VO	49VO-WRF	15cd	FLR 1W CO2 MANIFOLD 1-SS008 1:A1:1-8				X					ON
N1:T3:A1:1-9	VO	49VO-WRF	15cd	FLR 1W SURGERY VENDOR 1-SS009	X			X					ON
N1:T3:A1:1-10	AV	49MTV-WRF	75cd	FLR 1W IR STOR 1-SS005 1:A1:1-10		X		X					ON
N1:T3:A1:1-11	VO	49VO-WRF	15cd	FLR 1W EQ STG 1-SS001 1:A1:1-11	X	X		X					ON
N1:T3:A1:1-12				SPARE			X	X					ON
N1:T3:A1:1-13				SPARE	X		X	X					ON
N1:T3:A1:1-14	AV	49MTV-WRF	15cd	FLR 1W CORR 1-SS029 @OR 8 1:A1:1-14		X	X	X					ON
N1:T3:A1:1-15	AV	49MTV-WRF	15cd	FLR 1W CORR 1-SS025 @OR 7 1:A1:1-15	X	X	X	X					ON
N1:T3:A1:1-16	VO	49VO-APPLW	30cd	FLR 1W OR 8 (CVOR) 1-SS024 1:A1:1-16					X				ON
N1:T3:A1:1-17	AV	49MTV-WRF	15cd	FLR 1W SUB STERILE 1-SS027 1:A1:1-17	X				X				ON
N1:T3:A1:1-18	VO	49VO-WRF	15cd	FLR 1W PUMP 1-SS025 1:A1:1-18		X			X				ON
N1:T3:A1:1-19	VO	49VO-APPLW	30cd	FLR 1W OR 7 (CVOR) 1-SS026 1:A1:1-19	X	X			X				ON
							X		X				ON

POINTS SHOWN IN ITALIC TEXT REFER TO EXISTING DEVICES.

N1:T3:A1: ENHANCED POWER SUPPLY – CHANNEL 2

IDNac Number	Device Type			Custom Label (Max 40 Characters)	1								
N1:T3:A1:2-1	AV	49MTV-WRF	15cd	FLR 1W CORR 1-SS041 1:A1:2-1	X								ON
N1:T3:A1:2-2	AV	49MTV-WRF	15cd	FLR 1W CORR 1-SS040 1:A1:2-2		X							ON
N1:T3:A1:2-3	AV	49MTV-WRF	15cd	FLR 1W CORR 1-SS019A SOUTH 1:A1:2-3	X	X							ON
N1:T3:A1:2-4	VO	49VO-WRF	15cd	FLR 1W CORR 1-SS019A NORTH 1:A1:2-4			X						ON
N1:T3:A1:2-5	VO	49VO-WRF	15cd	FLR 1W CORR 1-SS019 SOUTH 1:A1:2-5	X		X						ON
N1:T3:A1:2-6	AV	49MTV-WRF	15cd	FLR 1W CORR 1-SS019 NORTH 1:A1:2-6		X	X						ON
N1:T3:A1:2-7	AV	49MTV-WRF	15cd	FLR 1W CORR 1-SS014 NORTH 1:A1:2-7	X	X	X						ON
N1:T3:A1:2-8	AV	49MTV-WRF	15cd	FLR 1W CORR 1-SS014 WEST 1:A1:2-8				X					ON
N1:T3:A1:2-9	VO	49VO-APPLW	30cd	FLR 1W OR 9 1-SS017 1:A1:2-9	X			X					ON
N1:T3:A1:2-10	VO	49VO-APPLW	30cd	FLR 1W OR 10 1-SS015 1:A1:2-10		X		X					ON
N1:T3:A1:2-11	AV	49MTV-WRF	15cd	FLR 1W CORR 1-SS014 EAST 1:A1:2-11	X	X		X					ON
N1:T3:A1:2-12	AV	49MTV-WRF	15cd	FLR 1W EQ STG 1-SS012 1:A1:2-12			X	X					ON
N1:T3:A1:2-13	VO	49VO-WRF	15cd	FLR 1W PUMP 1-SS018 1:A1:2-13	X		X	X					ON
N1:T3:A1:2-14	VO	49VO-WRF	15cd	FLR 1W SOIL UTIL 1-SS020 1:A1:2-14		X	X	X					ON
N1:T3:A1:2-15	VO	49VO-WRF	15cd	FLR 1W ANES. WK. 1-SS012A 1:A1:2-15	X	X	X	X					ON
N1:T3:A1:2-16									X				ON
N1:T3:A1:2-17					X				X				ON

N1:T3:A1:1 — Notification SLC Distributed Load Voltage Drop

Allowable % Drop: 20.7% | Wire Gauge: 14ga | Starting Voltage: 29vdc | Wire Res. Per Ft. 0.0031 @ 75° Celsius | Min. Device Voltage: 23.vdc

Branch	Device #	From	Distance (Feet)	PID	Candela	Device Draw	Current at Device	Voltage Drop	Voltage at Device	% Vdrop Wire Length
1	N1:T3:A1:1-1	PANEL	22	49VO-WRF	30cd	0.0570	0.790	0.107	28.893	Branch 1: 1.74% Length: 338
1	N1:T3:A1:1-2	N1:T3:A1:1-1	22	49VO-WRF	15cd	0.0470	0.047	0.006	28.887	
1	N1:T3:A1:1-3	N1:T3:A1:1-1	31	49MTV-WRF	15cd	0.1450	0.686	0.131	28.763	
1	N1:T3:A1:1-4	N1:T3:A1:1-3	32	49MTV-WRF	15cd	0.1450	0.541	0.106	28.656	
1	N1:T3:A1:1-5	N1:T3:A1:1-4	20	49MTV-WRF	75cd	0.1980	0.396	0.049	28.608	
1	N1:T3:A1:1-6	N1:T3:A1:1-11	43	49MTV-WRF	30cd	0.1630	0.163	0.043	28.509	
1	N1:T3:A1:1-7	N1:T3:A1:1-5	30	49VO-WRF	30cd	0.0570	0.198	0.036	28.571	
1	TAP1	N1:T3:A1:1-7	6	JBOX		0.0000	0.141	0.005	28.566	
1	N1:T3:A1:1-8	TAP1	23	49VO-WRF	15cd	0.0470	0.094	0.013	28.553	
1	N1:T3:A1:1-9	N1:T3:A1:1-8	14	49VO-WRF	15cd	0.0470	0.047	0.004	28.549	
1	N1:T3:A1:1-10	N1:T3:A1:1-11	47	49MTV-WRF	75cd	0.1980	0.198	0.057	28.495	
1	N1:T3:A1:1-11	TAP1	48	49VO-WRF	15cd	0.0470	0.047	0.014	28.552	
2	N1:T3:A1:1-14	PANEL	139	49MTV-WRF	15cd	0.1450	0.596	0.509	28.491	Branch 2: 2.12% Length: 301
2	N1:T3:A1:1-15	N1:T3:A1:1-14	45	49MTV-WRF	15cd	0.1450	0.145	0.040	28.451	
2	N1:T3:A1:1-16	N1:T3:A1:1-14	26	49VO-APPLW	30cd	0.0570	0.306	0.049	28.442	
2	N1:T3:A1:1-17	N1:T3:A1:1-16	32	49MTV-WRF	15cd	0.1450	0.249	0.049	28.394	
2	N1:T3:A1:1-18	N1:T3:A1:1-17	33	49VO-WRF	15cd	0.0470	0.047	0.010	28.384	
2	N1:T3:A1:1-19	N1:T3:A1:1-17	26	49VO-APPLW	30cd	0.0570	0.057	0.009	28.384	
						0.0000	0.000	0.000	0.000	
						0.0000	0.000	0.000	0.000	

(Class B Calculations: Current at Device, Voltage Drop, Voltage at Device)

N1:T3:A1:2 — Distributed Load Voltage Drop

Allowable % Drop: 20.7% | Wire Gauge: 14ga | Starting Voltage: 29vdc | Wire Res. Per Ft. 0.0031 @ 75° Celsius | Min. Device Voltage: 23.vdc

Branch	Device #	From	Distance (Feet)	PID	Candela	Device Draw	Current at Device	Voltage Drop	Voltage at Device	Branch % Drop
Branch	Device #	From	(Feet)			0.0000	0.000	#VALUE!	#VALUE!	
1	TAP2	PANEL	11	JBOX		0.0000	1.509	0.102	28.898	Branch 1: 4.78% Length: 545
1	N1:T3:A1:2-1	TAP2	36	49MTV-WRF	15cd	0.1450	0.145	0.032	28.866	
1	N1:T3:A1:2-2	TAP2	84	49MTV-WRF	15cd	0.1450	0.145	0.075	28.823	
1	N1:T3:A1:2-3	TAP2	34	49MTV-WRF	15cd	0.1450	1.219	0.254	28.644	
1	N1:T3:A1:2-4	N1:T3:A1:2-3	31	49VO-WRF	15cd	0.0470	1.074	0.204	28.439	
1	N1:T3:A1:2-5	N1:T3:A1:2-4	23	49VO-WRF	15cd	0.0470	1.027	0.145	28.294	
1	N1:T3:A1:2-6	N1:T3:A1:2-5	38	49MTV-WRF	15cd	0.1450	0.980	0.229	28.065	
1	N1:T3:A1:2-7	N1:T3:A1:2-6	41	49MTV-WRF	15cd	0.1450	0.788	0.198	27.867	
1	N1:T3:A1:2-8	N1:T3:A1:2-7	24	49MTV-WRF	15cd	0.1450	0.596	0.088	27.779	
1	N1:T3:A1:2-9	N1:T3:A1:2-8	29	49VO-APPLW	30cd	0.0570	0.057	0.010	27.769	
1	N1:T3:A1:2-10	N1:T3:A1:2-8	31	49VO-APPLW	30cd	0.0570	0.057	0.011	27.768	
1	N1:T3:A1:2-11	N1:T3:A1:2-8	47	49MTV-WRF	15cd	0.1450	0.337	0.097	27.682	
1	N1:T3:A1:2-15	N1:T3:A1:2-11	35	49VO-WRF	15cd	0.0470	0.192	0.041	27.641	
1	N1:T3:A1:2-12	N1:T3:A1:2-15	31	49MTV-WRF	15cd	0.1450	0.145	0.028	27.613	
1	N1:T3:A1:2-13	N1:T3:A1:2-6	26	49VO-WRF	15cd	0.0470	0.047	0.008	28.058	
1	N1:T3:A1:2-14	N1:T3:A1:2-7	24	49VO-WRF	15cd	0.0470	0.047	0.007	27.860	

(Class B Calculations: Current at Device, Voltage Drop, Voltage at Device)

Revising Permit # 2015-967545-LT

Only highlighted or clouded revisions are approved on this review. All previous comments apply.

City of Aurora Building Division
Reviewed for Code Compliance
Approved as Noted: John J Van Essen
Date: Dec 01, 2015
2009 INTERNATIONAL CODES & 2014 NEC
RSN: 1064674
Permit #: 2015-1026387-LT

NICET CERTIFICATION

TECHNICAL AREA 00303: LEVEL 3
CERTIFICATE #: 93727
VALID THROUGH: 03/01/18

NANCY S. WILTSIE — DATE: 10/13/15

tyco SimplexGrinnell
Safer. Smarter. Tyco.™
DISTRICT - 419
6240 SMITH ROAD
DENVER, CO 80216
SERVICE: 303-355-0500
PHONE: 303-355-0500
FAX: 303-355-0615

MEDICAL CENTER OF AURORA SURGERY RENOVATIONS PHASES I-III

MEDICAL CENTER OF AURORA
1501 S POTOMAC STREET
AURORA, COLORADO 80012

ISSUE LOG: (Revisions shown with △# symbol)

MARK	DATE	CAD	CHK	DESCRIPTION
1	5/22/15	CPM	NSW	REV2 AND REV3 MODIFICATIONS
2	8/20/15	NSW	NSW	FSD CONTROL

DRAWN BY:	C. P. MADDEN
CHECKED BY:	N. S. WILTSIE
ISSUE DATE:	4/27/15
JOB #:	419435597
PROJECT #:	419:982434501

SIMPLEXGRINNELL © 2015

SYSTEM: FIRE ALARM SYSTEM

SHEET: NODE 1 TRANSPONDER 3 - CALCULATIONS AND SCHEDULES

FA-603

IMPORTANT NOTICE TO USER: By accepting or using this drawing and/or the information contained herein, the user agrees to the following terms and conditions: The electronic information in the drawing may be subject to intentional or unintentional alteration. Any use, reuse, copying modification or alteration of the information contained herein shall be at the sole risk of the user. This information may not be sold or transferred to any third party, used on other projects or additions to the project for which it was prepared, or used for completion of this project by any third party. SimplexGrinnell disclaims all liability for the use or reuse of altered files by the user or any third party and such use will be a user's sole risk. User shall, to the fullest extent permitted by law, defend, indemnify, and hold SimplexGrinnell harmless from any and all claims for loss, damage or injury arising directly or indirectly therefrom.

4098-9756 ADDRESSABLE ANALOG 4-WIRE DUCT SENSOR MAPNET II/IDNet SLC WITH 24VDC RELAY

PRODUCT INFORMATION

FEATURES:

COMPACT AIR DUCT SENSOR HOUSING WITH CLEAR COVER TO MONITOR FOR THE PRESENCE OF SMOKE. INCLUDES FACTORY INSTALL TRUEALARM PHOTOELECTRIC SMOKE DETECTOR AND FEATURES:

- INDIVIDUAL SENSOR INFORMATION PROCESSED BY THE HOST CONTROL PANEL TO DETERMINE SENSOR STATUS
- DIGITAL TRANSMISSION OF ANALOG SENSOR VALUES VIA MAPNET II OR IDNET SLC 2-WIRE COMMUNICATIONS
- PROGRAMMABLE SENSITIVITY, CONSISTENT ACCURACY, ENVIRONMENTAL COMPENSATION, STATUS TESTING, AND MONITORING OF SENSOR DIRT ACCUMULATION

MODEL:

- DUCT SENSOR HOUSING WITH SUPERVISED OUTPUT FOR MULTIPLE REMOTE RELAYS. REQUIRES SEPARATE 24 VDC (RELAYS ARE UNDER PANEL CONTROL AND CAN BE ACTIVATED MANUALLY OR BY A SEPARATE ALARM/INPUT)

GENERAL FEATURES:

- UL LISTED TO STANDARD 268A
- CLEAR COVER ALLOWS VISUAL INSPECTION
- TEST PORTS PROVIDE FUNCTIONAL SMOKE TESTING ACCESS WITH COVER IN PLACE
- MOUNTS TO RECTANGULAR DUCTS OR ROUND DUCTS (MINIMUM SIZE 8" SQUARE OR 18" DIAMETER)
- MAGNETIC TEST FEATURE FOR ALARM INITIATION AT HOUSING
- OPTIONAL WEATHERPROOF ENCLOSURE IS AVAILABLE SEPARATELY (REFER TO DATA SHEET S4098-0032)

DIAGNOSTIC LEDS (ON INTERFACE BOARD):

- RED ALARM/TROUBLE LED FOR SENSOR STATUS AND COMMUNICATIONS POLLING DISPLAY
- YELLOW LED FOR OPEN OR SHORTED TROUBLE INDICATION OF SUPERVISED RELAY CONTROL

SAMPLING TUBES (ORDERED SEPARATELY):

- AVAILABLE IN MULTIPLE LENGTHS TO MATCH DUCT SIZE
- INSTALLED AND SERVICED WITH HOUSING IN PLACE

REMOTE MODULE OPTIONS (ORDERED SEPARATELY):

- RED STATUS/ALARM LED (2098-9808)
- TEST STATION WITH LED (2098-9806)
- RELAYS USED (4098-9843)

SPECIFICATIONS:

GENERAL SPECIFICATIONS	
AIR VELOCITY RANGE (LINEAR FT/MIN)	300 TO 4000 FT/min (91 TO 1220 m/min)
SENSOR SENSITIVITY RANGE	0.2% TO 3.7% PER FOOT OF OBSCURATION, SELECTABLE AT HOST CONTROL PANEL
UL LISTED TEMPERATURE RANGE	32° F TO 100° F (0° C TO 38° C)
OPERATING TEMPERATURE RANGE	32° F TO 122° F (0° C TO 50° C)
STORAGE TEMPERATURE RANGE	0° F TO 140° F (-18° C TO 60° C)
HUMIDITY RANGE	10% TO 95% RH, NON-CONDENSING
HOUSING COLOR	BLACK BASE WITH CLEAR COVER
WIRING CONNECTIONS	TERMINAL BLOCKS, 18 TO 12 AWG
REMOTE STATUS/ALARM LED AND TEST STATION WITH REMOTE STATUS/ALARM LED	
REMOTE ALARM LED CURRENT	1.2 mA, NO IMPACT TO ALARM CURRENT (2098-9808 OR 2098-9806)
TEST STATION KEYSWITCH CURRENT	3.3 mA, NO IMPACT TO ALARM CURRENT (2098-9806)
REMOTE ALARM LED AND TEST STATION DISTANCE	250 FT. (76m) MAXIMUM
ADDRESSABLE OPERATION	
DATA COMMUNICATIONS	MAPNET II OR IDNET SLC COMMUNICATION, AUTO-SELECT 1 ADDRESS PER HOUSING, PROVIDES OPERATING POWER TO MODEL 4098-9755
MODEL 4098-9756 WITH SUPERVISED MULTIPLE RELAY CONTROL, REQUIRES SEPARATE FUSED 24 VDC FROM FIRE ALARM POWER SUPPLY	
INPUT VOLTAGE	17-32 VDC (24 VDC NOMINAL)
STANDBY CURRENT	3 mA @ 24 VDC
ALARM CURRENT	15 mA @ 24 VDC, ADD 15 mA ADDITIONAL FOR EACH 4098-9843 RELAY
4098-9843 RELAY OUTPUT RATINGS, SINGLE FORM C	
COIL CURRENT	15 mA @ 24 VDC UP TO 15 MAX. PER RELAY CONTROL OUTPUT
RELAY CONTACTS, RESISTIVE RATINGS	7 A @ 28 VDC & 120 VAC; 250 uA @ 5 VDC
LOCATION DISTANCE	500 FT. (152m) MAX. TO RELAY COILS; RELAY MUST BE WITHIN 3 FT. (1m) OF DEVICE BEING CONTROLLED PER NFPA 72, SECTION 3-9.2.1

DUCT DETECTOR SELECTION CHART

DUCT SMOKE SENSOR HOUSING WITH PHOTOELECTRIC SENSOR		
MODEL	DESCRIPTION	COMPATIBILITY
4098-9756	DUCT HOUSING WITH SUPERVISED MULTIPLE RELAY CONTROL FOR UP TO 15 - 4098-9843 RELAYS (ORDERED SEPARATELY). REQUIRES SEPARATE 24 VDC FIRE ALARM POWER AND RELAY END-OF-LINE RESISTOR	SIMPLEX FIRE ALARM CONTROL MODELS 4008, 4010, 4020, 4100, AND 4120.
REMOTE LED INDICATOR AND TEST STATION, SELECT ONE IF REQUIRED		
MODEL	DESCRIPTION	MOUNTING
2098-9808	RED LED STATUS INDICATOR	USE SINGLE GANG BOX, 3" H X 2" W X 2" D (76 mm X 51 mm X 51 mm)
2098-9806	TEST STATION WITH KEYSWITCH AND RED LED STATUS (TURNING SWITCH TO TEST INITIATES ALARM FOR SYSTEM TESTING	

2098-9808
REMOTE STATUS/ALARM INDICATOR

2098-9806
TEST STATION

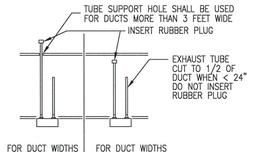

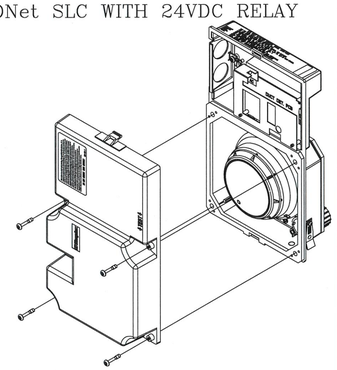

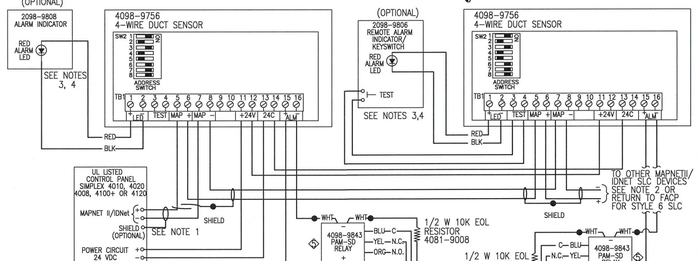

WIRING NOTES:

1. DUCT SENSOR WIRING IS 12 TO 18 AWG.
2. MAXIMUM QUANTITY OF DEVICES PER CIRCUIT IS 127 FOR 4020, 4100+, OR 4120, AND 250 FOR THE 4010 PANEL.
3. THE 2098-9806 AND 2098-9808 ARE POLARIZED, OBSERVE COLOR-CODED WIRING.
4. MAXIMUM WIRE LENGTH TO TEST TERMINALS AND REMOTE LED IS 250 FEET.
- ◇ 4098-9843 PAM-SD RELAY (AIR PRODUCTS & CONTROL LIMITED) ARE RATED AT 7 AMPS 28 VDC/10 AMPS @ 115 VAC. MAXIMUM WIRE LENGTH TO PAM-SD RELAYS IS 500 FT. (15 PAM-SD RELAYS MAX.). WIRING FROM THE RELAY TO THE DEVICE IT IS CONTROLLING SHOULD BE NO MORE THAN 3 FT. (PER NFPA 72).

4098-9755 ADDRESSABLE ANALOG 2-WIRE DUCT SENSOR MAPNET II/IDNET SLC

PRODUCT INFORMATION

FEATURES:

COMPACT AIR DUCT SENSOR HOUSING WITH CLEAR COVER TO MONITOR FOR THE PRESENCE OF SMOKE. INCLUDES FACTORY INSTALL TRUEALARM PHOTOELECTRIC SMOKE DETECTOR AND FEATURES:

- INDIVIDUAL SENSOR INFORMATION PROCESSED BY THE HOST CONTROL PANEL TO DETERMINE SENSOR STATUS
- DIGITAL TRANSMISSION OF ANALOG SENSOR VALUES VIA MAPNET II OR IDNET SLC 2-WIRE COMMUNICATIONS
- PROGRAMMABLE SENSITIVITY, CONSISTENT ACCURACY, ENVIRONMENTAL COMPENSATION, STATUS TESTING, AND MONITORING OF SENSOR DIRT ACCUMULATION

MODEL:

- BASIC DUCT SENSOR HOUSING (NO RELAY OUTPUT) POWERED BY MAPNETII/IDNET SLC COMMUNICATIONS

GENERAL FEATURES:

- UL LISTED TO STANDARD 268A
- CLEAR COVER ALLOWS VISUAL INSPECTION
- TEST PORTS PROVIDE FUNCTIONAL SMOKE TESTING ACCESS WITH COVER IN PLACE
- MOUNTS TO RECTANGULAR DUCTS OR ROUND DUCTS (MINIMUM SIZE 8" SQUARE OR 18" DIAMETER)
- MAGNETIC TEST FEATURE FOR ALARM INITIATION AT HOUSING
- OPTIONAL WEATHERPROOF ENCLOSURE IS AVAILABLE SEPARATELY (REFER TO DATA SHEET S4098-0032)

DIAGNOSTIC LEDS (ON INTERFACE BOARD):

- RED ALARM/TROUBLE LED FOR SENSOR STATUS AND COMMUNICATIONS POLLING DISPLAY

SAMPLING TUBES (ORDERED SEPARATELY):

- AVAILABLE IN MULTIPLE LENGTHS TO MATCH DUCT SIZE
- INSTALLED AND SERVICED WITH HOUSING IN PLACE

REMOTE MODULE OPTIONS (ORDERED SEPARATELY):

- RED STATUS/ALARM LED (2098-9808)
- TEST STATION WITH LED (2098-9806)

SPECIFICATIONS:

GENERAL SPECIFICATIONS	
AIR VELOCITY RANGE (LINEAR FT/MIN)	300 TO 4000 FT/min (91 TO 1220 m/min)
SENSOR SENSITIVITY RANGE	0.2% TO 3.7% PER FOOT OF OBSCURATION, SELECTABLE AT HOST CONTROL PANEL
UL LISTED TEMPERATURE RANGE	32° F TO 100° F (0° C TO 38° C)
OPERATING TEMPERATURE RANGE	32° F TO 122° F (0° C TO 50° C)
STORAGE TEMPERATURE RANGE	0° F TO 140° F (-18° C TO 60° C)
HUMIDITY RANGE	10% TO 95% RH, NON-CONDENSING
HOUSING COLOR	BLACK BASE WITH CLEAR COVER
WIRING CONNECTIONS	TERMINAL BLOCKS, 18 TO 12 AWG
REMOTE STATUS/ALARM LED AND TEST STATION WITH REMOTE STATUS/ALARM LED	
REMOTE ALARM LED CURRENT	1.2 mA, NO IMPACT TO ALARM CURRENT (2098-9808 OR 2098-9806)
TEST STATION KEYSWITCH CURRENT	3.3 mA, NO IMPACT TO ALARM CURRENT (2098-9806)
REMOTE ALARM LED AND TEST STATION DISTANCE	250 FT. (76m) MAXIMUM
ADDRESSABLE OPERATION	
DATA COMMUNICATIONS	MAPNET II OR IDNET SLC COMMUNICATION, AUTO-SELECT 1 ADDRESS PER HOUSING, PROVIDES OPERATING POWER TO MODEL 4098-9755

DUCT DETECTOR SELECTION CHART

DUCT SMOKE SENSOR HOUSING WITH PHOTOELECTRIC SENSOR		
MODEL	DESCRIPTION	COMPATIBILITY
4098-9755	BASIC DUCT SENSOR HOUSING, OPERATING POWER IS SUPPLIED BY EITHER MAPNETII OR IDNet COMMUNICATIONS (NO RELAY OUTPUT)	SIMPLEX FIRE ALARM CONTROL MODELS 4008, 4010, 4020, 4100, 4120. ALSO 2120 CDT IF CONFIGURED FOR MAPNETII, TRUEALARM OPERATION
REMOTE LED INDICATOR AND TEST STATION, SELECT ONE IF REQUIRED		
MODEL	DESCRIPTION	MOUNTING
2098-9808	RED LED STATUS INDICATOR	USE SINGLE GANG BOX, 3" H X 2" W X 2" D (76 mm X 51 mm X 51 mm)
2098-9806	TEST STATION WITH KEYSWITCH AND RED LED STATUS (TURNING SWITCH TO TEST INITIATES ALARM FOR SYSTEM TESTING)	

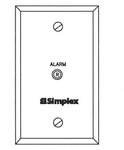

2098-9808
REMOTE STATUS/ALARM INDICATOR

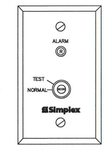

2098-9806
TEST STATION

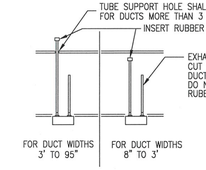

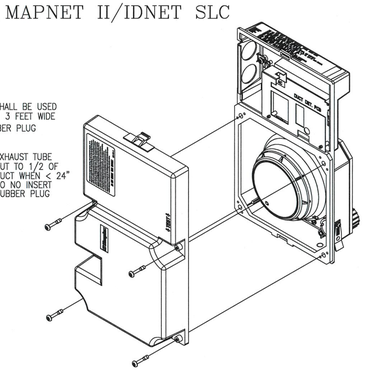

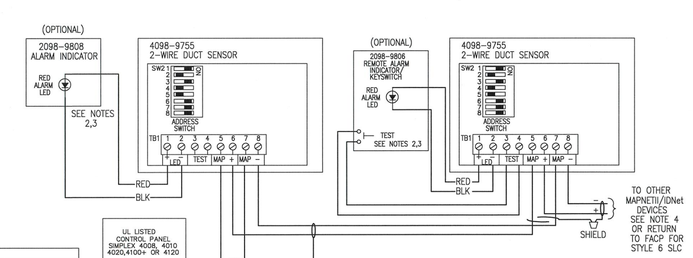

WIRING NOTES:

1. DUCT SENSOR WIRING IS 12 TO 18 AWG.
2. MAXIMUM WIRE LENGTH TO TEST TERMINALS AND REMOTE LED IS 250 FEET.
3. THE 2098-9806 AND 2098-9808 ARE POLARIZED, OBSERVE COLOR-CODED WIRING.
4. MAXIMUM QUANTITY OF DEVICES PER CIRCUIT IS 127 FOR 4020, 4100+, OR 4120, 128 FOR THE 2120 CDT PANEL, AND 250 FOR THE 4010 PANEL.

4090-9002 IDNet SLC, INDIVIDUAL ADDRESSABLE OUTPUT MODULE RELAY (AOM)

PRODUCT INFORMATION

FEATURES:

- UL LISTED
- A SINGLE ADDRESSABLE POINT BOTH CONTROLS A 2A FORM "C" CONTACT AND TRACKS ITS STATUS
- COMPATIBLE WITH SIMPLEX MODEL 4010 AND 4100 ADDRESSABLE FIRE ALARM CONTROL PANEL
- LATCHING RELAY DESIGN ALLOWS DATA AND POWER TO BE BOTH SUPPLIED BY IDNet COMMUNICATIONS
- COMPACT, SEALED CONSTRUCTION:
  - SCREW TERMINALS FOR WIRING CONNECTIONS
  - REDUCES DUST INFILTRATION

SPECIFICATIONS:

- RELAY IAM POWER: SUPPLIED BY IDNet COMMUNICATIONS
- RELAY IAM CONTACTS (FORM "C", SPDT)
- POWER LIMITED RATING: 2A @ 24VDC, TRANSIENT SUPPRESSED LOADS, 1A @ 24VDC FOR INDUCTIVE LOADS
- NON POWER LIMITED RATING: 1/2A @ 24VAC, TRANSIENT SUPPRESSED LOADS, 1A @ 24 VDC FOR INDUCTIVE LOADS
- WIRE CONNECTIONS: SCREW TERMINALS FOR IN/OUT WIRING, #18 TO #14 AWG WIRE
- COMPATIBLE WITH SIMPLEX 2081-9044 OVER VOLTAGE PROTECTORS
- DIMENSIONS: 4 1/8"H x 4 1/8"W x 1 3/8"D (105mm x 105mm x 35mm)
- HOUSING MATERIAL: BLACK THERMOPLASTIC
- MOUNTING PLATE MATERIAL: SHEET METAL, GALVANIZED
- TEMPERATURE RANGE: 32° F TO 120° F (0° C TO 49° C) INTENDED FOR INDOOR OPERATION
- HUMIDITY RANGE UP TO 93% RH AT 100° F (38° C)

DESCRIPTION:

IDNet SLC RELAY MODULES ALLOW THE SIMPLEX FIRE ALARM CONTROL PANEL TO CONTROL A REMOTELY LOCATED FORM "C" CONTACT USING IDNet ADDRESSABLE COMMUNICATIONS FOR BOTH DATA AND POWER. TYPICAL APPLICATIONS WOULD BE FOR SWITCHING LOCAL POWER FOR CONTROL FUNCTIONS SUCH AS ELEVATOR CAPTURE, OR CONTROL OF HVAC COMPONENTS, PRESSURIZATION FANS, DAMPERS, ETC. RELAY STATUS IS ALSO COMMUNICATED REQUIRING ONLY ONE DEVICE ADDRESS.

WIRING NOTES:

1. IDNet LINES ARE TO BE #18 AWG TWISTED PAIR (CONSULT SC SALES ENGINEERING FOR EXCEPTIONS).
2. MAXIMUM ALLOWABLE LINE RUN, FROM THE F.A.C.P. TO THE FARTHEST DEVICE, NOT TO EXCEED 2500 FEET.
3. MAXIMUM QUANTITY OF DEVICES PER CIRCUIT: CONTROL PANEL MODULE DEPENDENT
4. CONTRACTOR WIRING TO RELAY CONTACTS IS UNSUPERVISED. USE #14 AWG WIRE TO LOCAL CODE.
5. RELAY CONTACTS RATED 2A, 24VDC (1A FOR INDUCTIVE LOAD) RELAY CONTACTS RATED 0.5A 120VAC (NON POWER LIMITED) FOR POWER-LIMITED OPERATION, POWER MUST BE PROVIDED FROM FACP OR POWER-LIMITED POWER SUPPLY LISTED FOR FIRE PROTECTIVE SIGNALING USE.
6. SEE INSTALLATION INSTRUCTIONS 574-184.
7. IF SHIELD IS PRESENT, CONNECT TO THE OUTGOING IDNet SHIELD TO PROVIDE A CONTINUOUS SHIELD OVER THE LENGTH OF THE IDNet CHANNEL. METHOD OF SPLICE DETERMINED BY AHJ.
8. WHEN CONNECTED TO A NON POWER-LIMITED SOURCE, THE WIRING MUST MAINTAIN A MINIMUM 1/4 INCH SEPARATION FROM IDNet WIRING.
9. WHEN USED WITH NON POWER-LIMITED SOURCE, THE "POWER LIMITED WIRING" INDICATION ON THE DEVICE LABEL MUST BE OBLITERATED.
10. WHEN BOTH POWER-LIMITED AND NON POWER-LIMITED SOURCES ARE PRESENT, USE TYPE FPL, FPLR OR FPLP POWER LIMITED CABLE FOR POWER-LIMITED CIRCUITS.
11. MAXIMUM TOTAL WIRE (INCLUDING ALL T-TAPS) ON CIRCUIT, FROM THE F.A.C.P. NOT TO EXCEED 10,000 FEET OR .58uF. (CLASS B ONLY)
12. REFER TO FIELD WIRING DIAGRAM 842-073

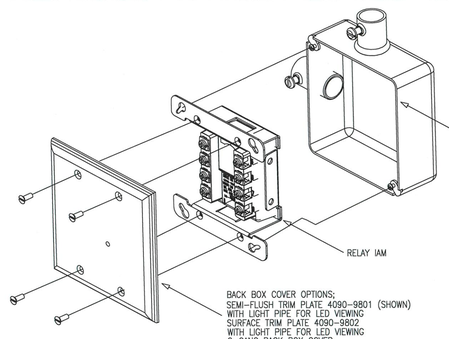

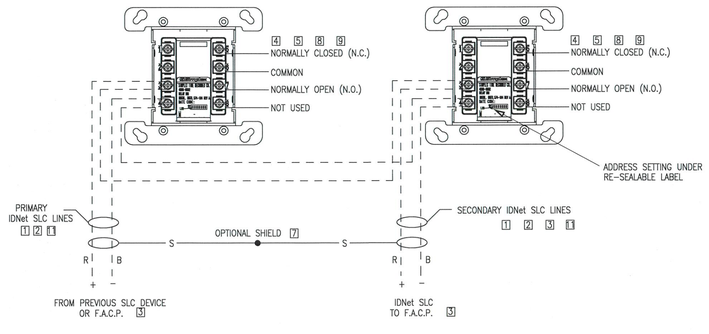

AIR PRODUCTS PAM-1 MULTI-VOLTAGE CONTROL RELAY

(SIMPLEX 2088-9021)

SPECIFICATIONS:

- POWER REQUIREMENTS: 15 mA PER POSITION @ 24 VDC, 24VAC, 115 VAC
- RELAY: U.L. RECOGNIZED SPDT
- CONTACT RATING: 10 AMPS @ 115VAC
- AMBIENT TEMPERATURE: -58° F TO 185 °F (-50°C TO 85°C)
- APPROVALS: U.L. RECOGNIZED COMPONENTS
- DIMENSIONS: 1-1/2"H X 1" W X 7/8" D (38.1mm H X 25.4mm W X 22.225mm D)
- 6" 18 AWG WIRE LEADS

WIRING:

- ALL WIRING TO COMPLY WITH LOCAL CODE.
- MAINTAIN CORRECT POLARITY
- CONDUCTORS MUST TEST FREE OF ALL GROUNDS.

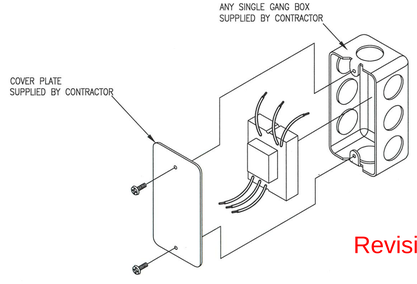

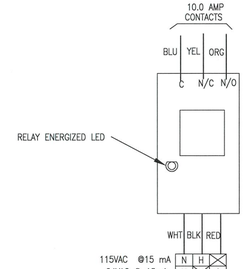

Revising Permit # 2015-967545-LT

Only highlighted or clouded revisions are approved on this review. All previous comments apply.

City of Aurora Building Division
Reviewed for Code Compliance
Approved as Noted: John J Van Essen
Date: Dec 01, 2015
2009 INTERNATIONAL CODES & 2014 NEC

RSN: 1064674
Permit #2015-1026387-LT

NICET CERTIFICATION

TECHNICAL AREA 00303: LEVEL 3
CERTIFICATE #: 93727
VALID THROUGH: 03/01/18

NANCY S. WILTSIE — DATE 10/13/15

tyco SimplexGrinnell
Safer. Smarter. Tyco.™

DISTRICT 419
DENVER CO 80216
SERVICE 303-355-0500

PHONE 303-355-0500
FAX: 303-355-0515

MEDICAL CENTER OF AURORA
SURGERY RENOVATIONS PHASES I-III

MEDICAL CENTER OF AURORA
1501 S POTOMAC STREET
AURORA, COLORADO 80012

ISSUE LOG:

MARK	DATE	CAD	CHK	DESCRIPTION
1	5/22/15	CPM	NSW	REV2 AND REV3 MODIFICATIONS
2	8/20/15	NSW	NSW	FSD CONTROL

Revisions shown with △ symbol

DRAWN BY:	C. P. MADDEN
CHECKED BY:	N. S. WILTSIE
ISSUE DATE:	4/27/15
JOB #:	419435597
PROJECT #:	419.982434501
SIMPLEXGRINNELL ©	2015
SYSTEM:	FIRE ALARM SYSTEM
SHEET:	WIRING TYPICALS

FA-702

IMPORTANT NOTICE TO USER: By accepting or using this drawing and/or the information contained herein, the user agrees to the following terms and conditions: The electronic information in the drawing may be subject to intentional or unintentional alteration. Any use, reuse, copying, modification or alteration of the information contained in files by the user or any third party and such use will be a user's own risk. User shall, to the fullest extent permitted by law, defend, indemnify, and hold SimplexGrinnell harmless from any and all claims for loss, damage or injury arising directly or indirectly therefrom.

FILE PATH: G:\Medical Center of Aurora\1501 S Potomac - Aurora South\South Tower - Node 1\20-MCOA Surgery Renovations FAS-2015-982434501\FIREPhase 1-3\FA-701.dwg
LAST SAVED BY: CMADDEN
LAST PRINTED: 8/24/2015 1:00:25 PM
24" x 36" - Arch D Size