City of Aurora Public Works Department

BUILDING PERMIT APPLICATION

Building Division • 15151 E. Alameda Parkway, Ste 2400 • Aurora, CO 80012 • 303-739-7420 • Fax: 303-739-7412
Email: ***permitcounter@auroragov.org***

Project Address 1400 S. Potomac #215			**Unit #** 20
Project Name: Colorado Complete Health			
Contractor Company Name All Pro Fire Protection		**Phone** 303 902 3603	**Fax**
Contact Person James		**Phone** 303 902 3603	
Email James@AllProFire.net			**Fax**
Architect and/or Engineer Contact information for correction items			
Architect or Engineer name [redacted] AL Bruch		**Email**	
Phone 720 227 3331		**Fax**	
Owner (Required for Certificate of Occupancy) only			
Owner address			
Email			
Valuation / FDA:$ 1600		**Materials Cost: $**	

FDA = Fee Determination Assessment. (Also known as the value of project) has no relationship to the construction costs for the building which can vary greatly. Rather, The assessment is used only to determine the appropriate level of fees to fund our code compliance activities.

Describe The Work You Will Be Doing: Relocating - 8

Adding - 4

I declare under penalty that this application has been examined by me and that the statements made herein are made in good faith pursuant to City of Aurora tax and licensing regulations; and to the best of my knowledge and belief are true, correct and complete.

Print Name James Lennon **Signature** [signature] **Date** 8/3/15

BOARD OF APPEALS: Contractor's Appeals and Standards Board. Applicants have the right to have the board hear appeals of orders, decisions or determinations made by the building official relative to the application and interpretation of the building code. Any application for appeal to the board shall be based on a claim that the true intent of the code or the rules legally adopted there under have been incorrectly interpreted, the provisions of the building code do not fully apply or an equally good or better form of construction is proposed.

THIS SPACE FOR OFFICE USE ONLY

Fee Determination Assessment: $ 1600

Change of occupancy/use: ☐ Yes ☐ No

REVIEWS
- ☐ Structural
- ☐ Mechanical
- ☐ Plumbing
- ☐ Electrical
- ☐ Fire-Life Safety
- ☐ Building Life Safety

INSPECTIONS
- ☐ Structural
- ☐ Mechanical
- ☐ Plumbing
- ☐ Electrical
- ☒ Life Safety
- ☐ Gate/Hazard

Intake Date:

Balance Due: $

PRE APPROVAL Initial ☐ Zoning ☐ Water

Exterior changes? ☐ Yes ☐ No

Homeowner verified: ☐ Yes ☐ No

2015-991980-CT

Permit Type: C

Mid roof / Ave Bldg Height: MR

Parent Permit RSN: 1025587

Plans Examiner: JMK

Subtype: Sprinkler

RSN: 1039119

Plans Picked Up By:

Company Name: RSN: 1039119

Phone Number Permit #: 2015-991980-CT

Submit to Aurora

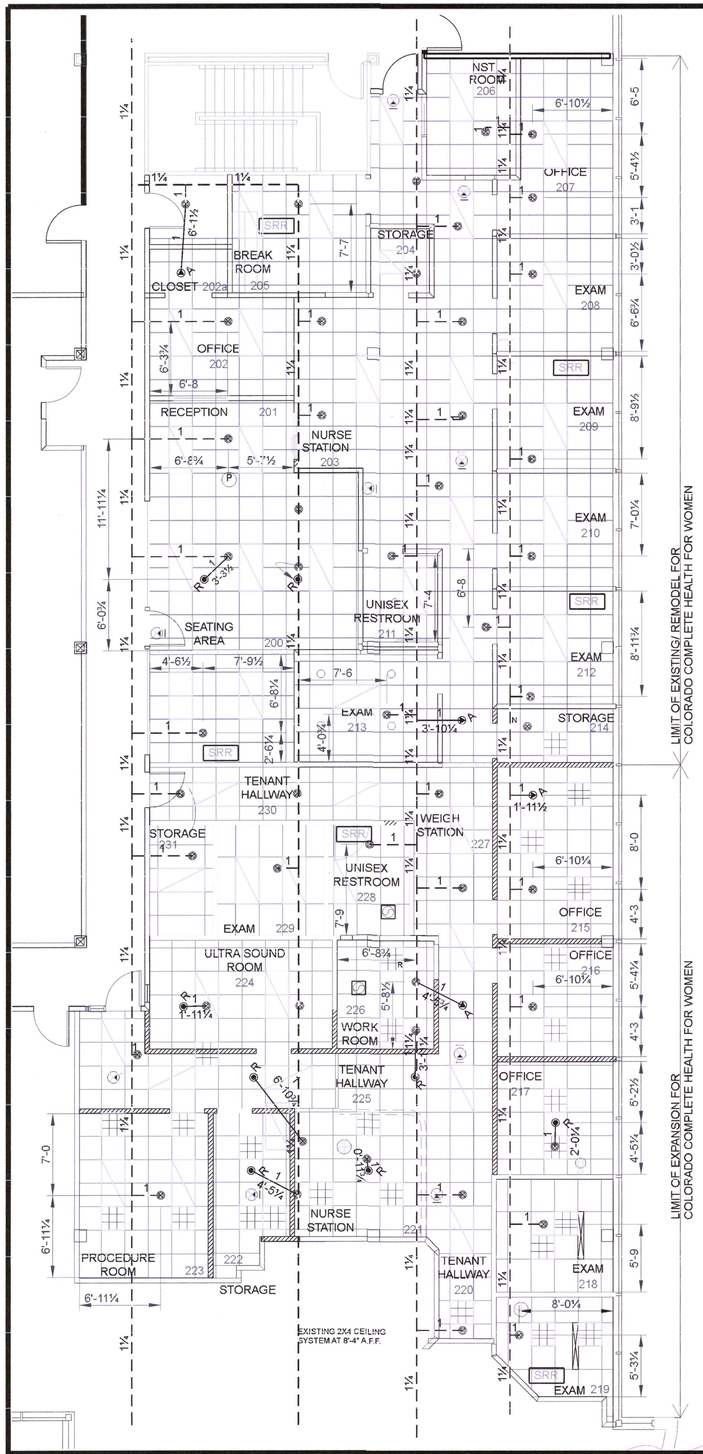

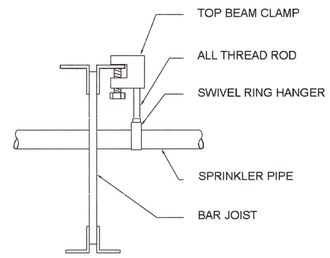

HANGER DETAIL #1

NOT TO SCALE

STEEL PIPE HANGER SPACING UNDER 100 PSI					
PIPE SIZE	DISTANCE	TO END OF LINE		MAX ARM-OVER	
1"	12'-0"	(SSP) 3'-0"	(SSU) 3'-0"	(SSP) 2'-0"	(SSU) 2'-0"
1¼"	12'-0"	(SSP) 4'-0"	(SSU) 4'-0"	(SSP) 2'-0"	(SSU) 2'-0"
1½"	12'-0"	(SSP) 5'-0"	(SSU) 5'-0"	(SSP) 2'-0"	(SSU) 2'-0"
2"	12'-0"	(SSP) 5'-0"	(SSU) 5'-0"	(SSP) 2'-0"	(SSU) 2'-0"
2½"	15'-0"	(SSP) 5'-0"	(SSU) 5'-0"	(SSP) 2'-0"	(SSU) 2'-0"
3"	15'-0"	(SSP) 5'-0"	(SSU) 5'-0"	(SSP) 2'-0"	(SSU) 2'-0"
4"	15'-0"	(SSP) 5'-0"	(SSU) 5'-0"	(SSP) 2'-0"	(SSU) 2'-0"

N.F.P.A. 13, 2002 TABLE 8.6.5.1.2 POSITIONING OF SPRINKLERS TO AVOID OBSTRUCTIONS TO DISCHARGE (SSU/SSP)	
DISTANCE FROM SPRINKLERS TO SIDE OF OBSTRUCTION	MAXIMUM ALLOWABLE DISTANCE OF DEFLECTOR ABOVE BOTTOM OF OBSTRUCTION
LESS THAN 1 FT	0
1 FT TO LESS THAN 1 FT 6 IN	2 1/2
1 FT 6 IN TO LESS THAN 2 FT	3 1/2
2 FT TO LESS THAN 2 FT 6 IN	5 1/2
2 FT 6 IN TO LESS THAN 3 FT	7 1/2
3 FT TO LESS THAN 3 FT 6 IN	9 1/2
3 FT 6 IN TO LESS THAN 4 FT	12
4 FT TO LESS THAN 4 FT 6 IN	14
4 FT 6 IN TO LESS THAN 5 FT	16 1/2
5 FT AND GREATER	18

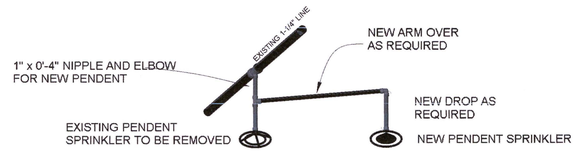

SPRINKLER RELOCATION DETAIL

1/2"=1'-0"

- EXISTING QR RECESSED PENDENT SPRINKLER
- EXISTING PIPE
- 1 / 7'-4½ — NEW PIPE
- ★ 8'-4 FF ℄ — PIPE CENTERLINE A.F.F.
- (9-0) — CEILING HEIGHT
- 1 — 2 x 1 MECH. TEE
- SRR — SMALL ROOM RULE SPACING

BUILDING INFORMATION
OCCUPANCY: B BUSINESS
CONSTRUCTION TYPE: I-A
FIRE SPRINKLERS: FULLY SPRINKLED
HAZARD CLASSIFICATION: LIGHHT
AREA OF WORK: SECOND FLOOR
NUMBER OF STORIES: TWO

SCOPE OF WORK
1.ADD AND RELOCATE SPRINKLERS FOR NEW CEILINGS AND WALLS.

APPROVED
City of Aurora Building Division
Date: 8/3/15
2007, NFPA 13
Permit # 30015 - 551980 - 15
RSW 103115

GENERAL NOTES
1. REMODEL AREA IS 4,169 SQ. FT.
2. FIRE SPRINKLER SYSTEM DESIGN PER N.F.P.A. 13, 2010, LOCAL JURISDICTION REQUIREMENTS.
3. GENERAL CONTRACTOR TO COORDINATE WITH ALARM CONTRACTOR FOR SYSTEM SHUT DOWN TO PERFORM SYSTEM MODIFICATIONS.
4. PIPING WILL NOT BE HYDROSTATICALLY TESTED.
5. ALL HANGERS AND SUPPORTS SHALL BE IN ACCORDANCE WITH N.F.P.A. 13, 2010.
6. IT IS THE RESPONSIBILITY OF THE OWNER TO PROTECT THE SYSTEM FROM FREEZING.
7. ALL PIPE AND FITTING 1" TO 2" DIAMETER TO BE DYNATHREAD 40 WITH DUCTILE IRON FITTINGS.
8. CONTRACT DOCUMENTS DO NOT REQUIRE SPRINKLERS TO BE CENTERED IN TILE. SOME ROOMS MAY USE QUARTER POINT TILE TO AVOID EXCESSIVE NUMBER OF SPRINKLER.
9. RELOCATION OF EXISTING LINES AND MAINS, PAINT, PATCH, WIRING, DEMOLITION WORK, SPRINKLERS CENTERED IN TILES, CUSTOM COLOR SPRINKLERS, AND BACKFLOW DEVICES ARE EXCLUDED FROM THIS CONTRACT.

SPRINKLER LEGEND					
SYMBOL	DESCRIPTION	ORIF.	TEMP.	FINISH	QTY.
◉R	EXISTING QR REC. PENDENT-RELO	1/2"	155	CHROME	8
▶A	VIKING M QR REC. PENDENT ADD	1/2"	155	CHROME	4
	TOTAL SPRINKLERS ON THIS SHEET				12

CONT.C.I.N. AFP180715-2
DRAWN BY: AWB
CHECKED BY: AWB
DATE: 07/18/15
4' 2' 0 10'
SCALE: 1/8" = 1'-0"

ALAN W. BRUCH
NICET LEVEL IIi
CERTIFICATION NO. 108440
7-18-15
DATE
Alan W. Bruch
SIGNATURE

ALLPRO FIRE PROTECTION
6058 S. PENNSYLVANIA ST.
CENTENNIAL, CO 80121
Phone: 303-656-6137
COLORADO STATE REGISTRATION NO. 15-1306

COLO. COMPLETE HEALTH

1400 S. POTOMAC, #215
AURORA, CO

FIRE SPRINKLER PIPING PLAN

AREA
2ND FLOOR
TENANT SPACE

SHEET NUMBER
FP-1
1 OF 1

RSN: 1039119
Permit #: 2015-991980-CT

VIKING®

TECHNICAL DATA

MICROFAST® AND MicrofastHP® QUICK RESPONSE PENDENT SPRINKLERS

The Viking Corporation, 210 N Industrial Park Drive, Hastings MI 49058
Telephone: 269-945-9501 Technical Services: 877-384-5464 Fax: 269-818-1680 Email: techsvcs@vikingcorp.com

1. DESCRIPTION

Viking Microfast® and MicrofastHP® Quick Response Pendent Sprinklers are small, thermosensitive, glass-bulb spray sprinklers available in several different finishes and temperature ratings and K-Factors to meet design requirements. The special Polyester,Polytetrafluoroethylene (PTFE), and Electroless Nickel PTFE (ENT) coatings can be used in decorative applications where colors are desired. In addition, these coatings have been investigated for installation in corrosive atmospheres and are listed/approved as corrosion resistant as indicated in the Approval Charts. (Note: **FM Global approves ENT finish as corrosion resistant.** FM Global has no approval classification for PTFE and Polyester coatings as corrosion resistant.)

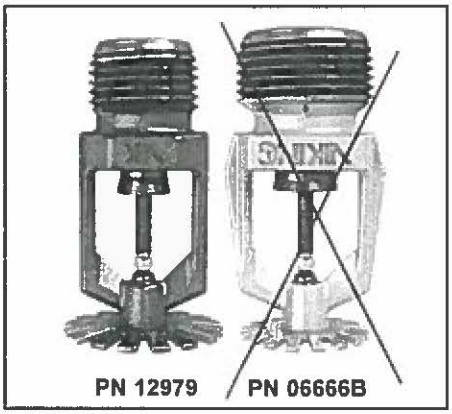

PN 12979 PN 06666B

2. LISTINGS AND APPROVALS

cULus Listed: Category VNIV
FM Approved: Classes 2001, 2002, 2015, and 2017
NYC Approved: Calendar Number 219-76-SA and MEA 89-92-E, Volume 16
ABS Certified: Certificate 04-HS407984C-PDA
VdS Approved: Certificates G4040095, G4040097, G4060056, G4060057, G4880045, G4930038, and G4980021
LPC Approved: Ref. Nos. 096e/03 and 096e/04
CE Certified: Standard EN 12259-1, EC-certificates of conformity 0786-CPD-40130, 0786-CPD-40170 and 0786-CPD-40279, 0832-CPD-2001, and 0832-CPD-2003
MED Certified: Standard EN 12259-1, EC-certificate of conformity 0832-MED-1003 and 0832-MED-1008
NOTE: Other International approval certificates are available upon request.

Refer to Approval Chart 1 and Design Criteria on page 41d for cULus Listing requirements and refer to Approval Chart 2 and Design Criteria on page 41f for FM Approval requirements that must be followed.

3. TECHNICAL DATA

Specifications:
Available since 1987.
Minimum Operating Pressure: 7 psi (0.5 bar)*
Maximum Working Pressure: Sprinklers 12282 and 12290 are rated for use with water working pressures ranging from the minimum 7 psi (0.5 bar) up to 250 psi (17 bar) for high-pressure systems. High-pressure (HP) sprinklers can be identified by locating "250" stamped on the deflector. All other Part Nos. not mentioned above are rated to a maximum 175 psi (12 bar) wwp.
Factory tested hydrostatically to 500 psi (34.5 bar)
Thread size: Refer to the Approval Charts
Nominal K-Factor: Refer to the Approval Charts
Glass-bulb fluid temperature rated to -65 °F (-55 °C)
Overall Length: Refer to the Approval Charts

Viking Technical Data may be found on The Viking Corporation's Web site at http://www.vikinggroupinc.com. The Web site may include a more recent edition of this Technical Data Page.

*cULus Listing, FM Approval, and NFPA 13 installs require a minimum of 7 psi (0.5 bar). The minimum operating pressure for LPCB and CE Approvals ONLY is 5 psi (0.35 bar).

Material Standards:
Frame Casting: Brass UNS-C84400 or QM Brass for Sprinklers 12979 and 12282. Brass UNS-C84400 for all other sprinklers.
Deflector: Phosphor Bronze UNS-C51000 or Copper UNS-C19500 for Sprinklers 12979, 06666B, and 06765B. Copper UNS-C19500 for Sprinkler 12282. Phosphor Bronze UNS-C51000, Copper UNS-C19500 or Brass UNS-C26000 for Sprinkler 06720B. Brass UNS-C26000 for all other Sprinklers.
Bushing (for Sprinklers 06718B, 06720B, and 12290): Brass UNS-C36000
Bulb: Glass, nominal 3 mm diameter
Belleville Spring Sealing Assembly: Nickel Alloy, coated on both sides with PTFE Tape
Screw: Brass UNS-C36000
Pip Cap and Insert Assembly: Copper UNS-C11000 and Stainless Steel UNS-S30400
For PTFE Coated Sprinklers: Belleville Spring-Exposed, Screw-Nickel Plated, Pip Cap-PTFE Coated
For Polyester Coated Sprinklers: Belleville Spring-Exposed
For ENT Coated Sprinklers: Belleville Spring-Exposed, Screw and Pipcap - ENT coated.

Replaces page 41a-f, dated June 5, 2013.
(ENT finish is now approved as corrosion resistant.)

RSN: 1039119
Permit #: 2015-991980-CT

VIKING® TECHNICAL DATA

MICROFAST® AND MicrofastHP® QUICK RESPONSE PENDENT SPRINKLERS

The Viking Corporation, 210 N Industrial Park Drive, Hastings MI 49058
Telephone: 269-945-9501 Technical Services: 877-384-5464 Fax: 269-818-1680 Email: techsvcs@vikingcorp.com

Ordering Information: (Also refer to the current Viking price list.)
Order Microfast® and MicrofastHP® Quick Response Pendent Sprinklers by first adding the appropriate suffix for the sprinkler finish and then the appropriate suffix for the temperature rating to the sprinkler base part number.
Finish Suffix: Brass = A, Chrome = F, White Polyester = M-/W, Black Polyester = M-/B, Black PTFE = N, and ENT = JN
Temperature Suffix: 135 °F (57 °C) = A, 155 °F (68 °C) = B, 175 °F (79 °C) = D, 200 °F (93 °C) = E, and 286 °F (141 °C) = G
For example, sprinkler VK302 with a 1/2" thread, Brass finish and a 155 °F (68 °C) temperature rating = Part No. 12979AB

Available Finishes And Temperature Ratings:

Refer to Table 1.

Accessories: (Also refer to the "Sprinkler Accessories" section of the Viking data book.)

Sprinkler Wrenches:

A. Standard Wrench: Part No. 10896W/B (available since 2000).
B. Wrench for Recessed Pendent Sprinklers: Part No. 16036W/B* (available since 2011)
C. Optional Protective Sprinkler Cap Remover/Escutcheon Installer Tool** Part No. 15915 (available since 2010.)
*A ½" ratchet is required (not available from Viking).
**Allows use from the floor by attaching a length of 1" diameter CPVC tubing to the tool. Ideal for sprinkler cabinets. Refer to Bulletin F_051808.

Sprinkler Cabinets:

A. Six-head capacity: Part No. 01724A (available since 1971)
B. Twelve-head capacity: Part No. 01725A (available since 1971)

4 INSTALLATION

Refer to appropriate NFPA Installation Standards.

5. OPERATION

During fire conditions, the heat-sensitive liquid in the glass bulb expands, causing the glass to shatter, releasing the pip cap and sealing spring assembly. Water flowing through the sprinkler orifice strikes the sprinkler deflector, forming a uniform spray pattern to extinguish or control the fire.

6. INSPECTIONS, TESTS AND MAINTENANCE

Refer to NFPA 25 for Inspection, Testing and Maintenance requirements.

7. AVAILABILITY

The Viking Microfast® and MicrofastHP® Quick Response Pendent Sprinklers are available through a network of domestic and international distributors. See The Viking Corporation web site for the closest distributor or contact The Viking Corporation.

8. GUARANTEE

For details of warranty, refer to Viking's current list price schedule or contact Viking directly.

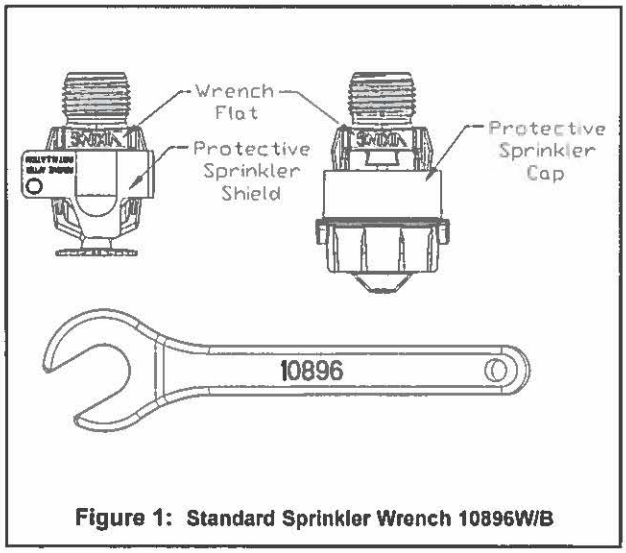

Figure 1: Standard Sprinkler Wrench 10896W/B

RSN: 1039119
Permit #: 2015-991980-CT

VIKING®

TECHNICAL DATA

MICROFAST® AND MicrofastHP® QUICK RESPONSE PENDENT SPRINKLERS

The Viking Corporation, 210 N Industrial Park Drive, Hastings MI 49058
Phone: 269-945-9501 Technical Services: 877-384-5464 Fax: 269-818-1680 Email: techsvcs@vikingcorp.com

TABLE 1: AVAILABLE SPRINKLER TEMPERATURE RATINGS AND FINISHES

Sprinkler Temperature Classification	Sprinkler Nominal Temperature Rating[1]	Maximum Ambient Ceiling Temperature[2]	Bulb Color
Ordinary	135 °F (57 °C)	100 °F (38 °C)	Orange
Ordinary	155 °F (68 °C)	100 °F (38 °C)	Red
Intermediate	175 °F (79 °C)	150 °F (65 °C)	Yellow
Intermediate	200 °F (93 °C)	150 °F (65 °C)	Green
High	286 °F (141 °C)	225 °F (107 °C)	Blue

Sprinkler Finishes: Brass, Chrome, White Polyester, Black Polyester, Black PTFE, and ENT

Corrosion-Resistant Coatings[3]: White Polyester, Black Polyester, and Black PTFE. ENT in all temperature ratings except 135 °F (57 °C).

Footnotes

[1] The sprinkler temperature rating is stamped on the deflector.

[2] Based on NFPA-13. Other limits may apply, depending on fire loading, sprinkler location, and other requirements of the Authority Having Jurisdiction. Refer to specific installation standards.

[3] The corrosion-resistant coatings have passed the standard corrosion test required by the approving agencies indicated in the Approval Charts. These tests cannot and do not represent all possible corrosive environments. Prior to installation, verify through the end-user that the coatings are compatible with or suitable for the proposed environment. For automatic sprinklers, the coatings indicated are applied to the exposed exterior surfaces only. Note that the spring is exposed on sprinklers with Polyester, PTFE, and ENT coatings. For ENT coated automatic sprinklers, the waterway is coated.

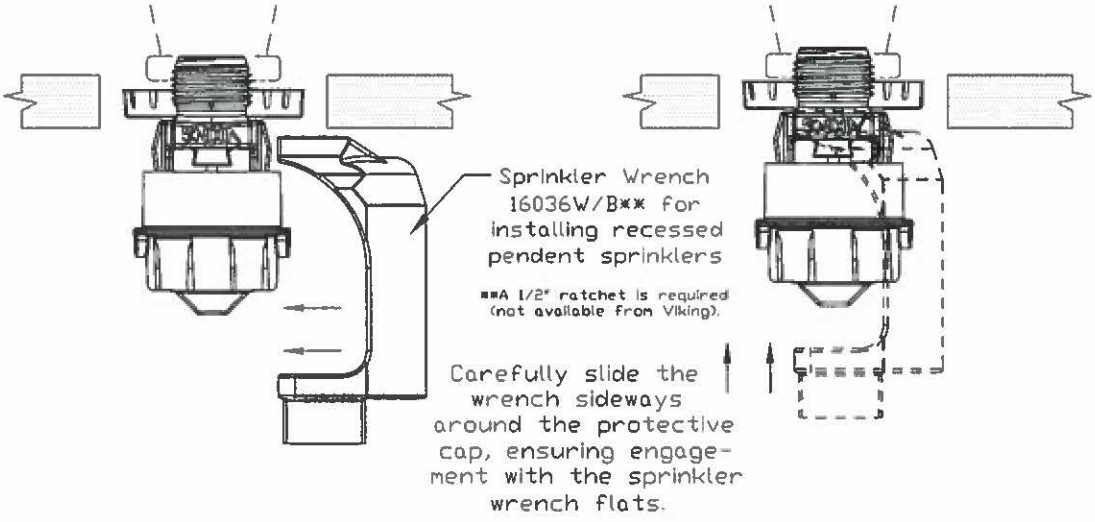

Figure 2: Wrench 16036W/B for Recessed Pendent Sprinklers

RSN: 1039119
Permit #: 2015-991980-CT

VIKING®

TECHNICAL DATA

MICROFAST® AND MicrofastHP® QUICK RESPONSE PENDENT SPRINKLERS

The Viking Corporation, 210 N Industrial Park Drive, Hastings MI 49058
Telephone: 269-945-9501 Technical Services: 877-384-5464 Fax: 269-818-1680 Email: techsvcs@vikingcorp.com

Approval Chart 1 (UL)

Microfast® and MicrofastHP® Quick Response Pendent Sprinklers
Maximum 175 PSI (12 bar) WWP

KEY: A1X ← Temperature, Finish, Escutcheon (if applicable)

Sprinkler Base Part No.[1]	SIN	Thread Size		Nominal K-Factor		Overall Length		Listings and Approvals[3] (Refer also to Design Criteria on page 41e.)					
		NPT	BSP	U.S.	metric[2]	Inches	mm	cULus[4]	NYC[5]	VdS	LPCB	CE	⊛
Standard Orifice													
12979	VK302	1/2"	15 mm	5.6	80.6	2-1/4"	57	A1X, B1Y, C4, E4Z	A1X, B1Y	--	--	--	--
18021	VK302	1/2"	15 mm	5.6	80.6	2-1/4"	58	A1X, B1Y	A1X, B1Y	A2	A2X, B2Y	C2X, E2Y[11]	C2X, E2Y[14]
Large Orifice													
06666B	VK352	3/4"	20 mm	8.0	115.2	2-3/8"	60	A1X, B1Y, C4, E4Z	A1X, B1Y	A2	A2X	C2[11]	--
06765B[15]	VK352	1/2"	15 mm	8.0	115.2	2-3/8"	60	A1X, B1Y, C4, E4Z	A1X, B1Y	A2	--	A2[12]	--
Small Orifice[8]													
06718B[9]	VK329	1/2"	15 mm	2.8	40.3	2-3/16"	56	A1X, B1Y	A1X, B1Y	--	--	--	--
06720B[9]	VK331	1/2"	15 mm	4.2	57	2-1/4"	58	A1X, B1Y	A1X, B1Y	--	--	--	--
06932B	VK331	--	10 mm	4.2	57	2-3/8"	60	--	--	A2	--	G3[13]	--

Maximum 250 PSI (17 bar) WWP
Standard Orifice

Sprinkler Base Part No[1]	SIN	Thread Size		Nominal K-Factor		Overall Length		Listings and Approvals[3] (Refer also to Design Criteria on page 41e.)					
		NPT	BSP	U.S.	metric[2]	Inches	mm	cULus[4]	NYC[10]	VdS	LPCB	CE	⊛
12282	VK317	1/2"	15 mm	5.6	80.6	2-1/4"	58	A1X, B1Y	A1X	--	--	--	--
Maximum 250 PSI (17 bar) WWP Small Orifice[8]													
12290[10]	VK342	1/2"	15 mm	2.8	40.3	2-3/16"	56	A1X, B1Y	A1X	--	--	--	--

Approved Temperature Ratings

A - 135 °F (57 °C), 155 °F (68 °C), 175 °F (79 °C), 200 °F (93 °C), and 286 °F (141 °C)
B - 135 °F (57 °C), 155 °F (68 °C), 175 °F (79 °C), and 200 °F (93 °C)
C - 155 °F (68 °C), 175 °F (79 °C), 200 °F (93 °C), and 286 °F (141 °C)
D - 135 °F (57 °C), 155 °F (68 °C), 175 °F (79 °C), and 286 °F (141 °C)
E - 155 °F (68 °C), 175 °F (79 °C), and 200 °F (93 °C)
F - 155 °F (68 °C), 175 °F (79 °C), and 286 °F (141 °C)
J - 155 °F (68 °C)

Approved Finishes

1 - Brass, Chrome, White Polyester[6,7], Black Polyester[6,7], and Black PTFE[6]
2 - Brass, Chrome, White Polyester[7], and Black Polyester[7]
3 - Brass and Chrome
4 - ENT[6]

Approved Escutcheons

X - Standard surface-mounted escutcheon or the Viking Microfast® Model F-1 Adjustable Escutcheon
Y - Standard surface-mounted escutcheon or the Viking Microfast® Model F-1 Adjustable Escutcheon or recessed with the Viking Micromatic® Model E-1 or E-2 Recessed Escutcheon
Z - Standard surface-mounted escutcheon or recessed with the Viking Micromatic® Model E-1

Footnotes

[1] Base part number is shown. For complete part number, refer to Viking's current price schedule.
[2] Metric K-factor measurement shown is when pressure is measured in Bar. When pressure is measured in kPa, divide the metric K-factor shown by 10.0.
[3] This table shows the listings and approvals available at the time of printing. Check with the manufacturer for any additional approvals.
[4] Listed by Underwriters Laboratories Inc. for use in the U.S. and Canada.
[5] Accepted for use, City of New York Board of Standards and Appeals, Calendar Number 219-76-SA.
[6] cULus Listed as corrosion resistant.
[7] Other colors are available on request with the same Listings and Approvals as the standard colors.
[8] Listings and Approvals limited to Light Hazard Occupancies where allowed by the installation standards being applied, with hydraulically calculated wet systems only. **Exception:** 4.2K sprinklers may be installed on hydraulically calculated dry pipe systems where piping is corrosion resistant or internally galvanized.
[9] The sprinkler orifice is bushed.
[10] Accepted for use, City of New York Department of Buildings, MEA Number 89-92-E, Vol. 16.
[11] CE Certified, Standard EN 12259-1, EC-certificates of conformity 0832-CPD-2001 and 0832-CPD-2003.
[12] CE Certified, Standard EN 12259-1, EC-certificate of conformity 0786-CPD-40279.
[13] CE Certified, Standard EN 12259-1, EC-certificate of conformity 0786-CPD-40130 and 0786-CPD-40170.
[14] ⊛ MED Certified, Standard EN 12259-1, EC-certificates of conformity 0832-MED-1003 and 0832-MED-1008.
[15] The 1/2" NPT Large Orifice Sprinkler is Listed and Approved for retrofit only.

RSN: 1039119
Permit #: 2015-991980-CT

VIKING®

TECHNICAL DATA

MICROFAST® AND MicrofastHP® QUICK RESPONSE PENDENT SPRINKLERS

The Viking Corporation, 210 N Industrial Park Drive, Hastings MI 49058
Telephone: 269-945-9501 Technical Services: 877-384-5464 Fax: 269-818-1680 Email: techsvcs@vikingcorp.com

DESIGN CRITERIA - UL

(Also refer to Approval Chart 1 on page 41d)

cULus Listing Requirements:

Microfast® and MicrofastHP® Quick Response Pendent Sprinklers are cULus Listed as indicated in the Approval Chart for installation in accordance with the latest edition of NFPA 13 for standard spray sprinklers.

- Designed for use in Light and Ordinary Hazard occupancies *(exception: small orifice sprinklers are limited to Light Hazard where allowed by the installation standards being applied, with hydraulically calculated wet systems only).*
- The sprinkler installation rules contained in NFPA 13 for standard spray pendent sprinklers must be followed.

IMPORTANT: Always refer to Bulletin Form No. F_091699 - Care and Handling of Sprinklers. Also refer to page 1-3 for general care, installation, and maintenance information. Viking sprinklers are to be installed in accordance with the latest edition of Viking technical data, the appropriate standards of NFPA, LPCB, APSAD, VdS or other similar organizations, and also with the provisions of governmental codes, ordinances, and standards, whenever applicable.

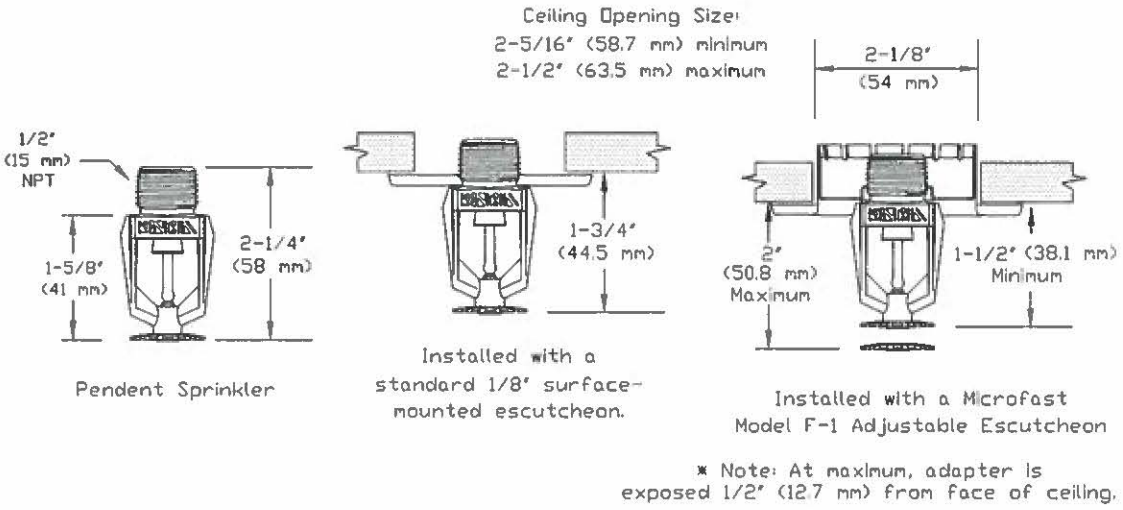

Figure 3: Sprinkler VK302 Dimensions with a Standard Escutcheon and the Model F-1 Adjustable Escutcheon

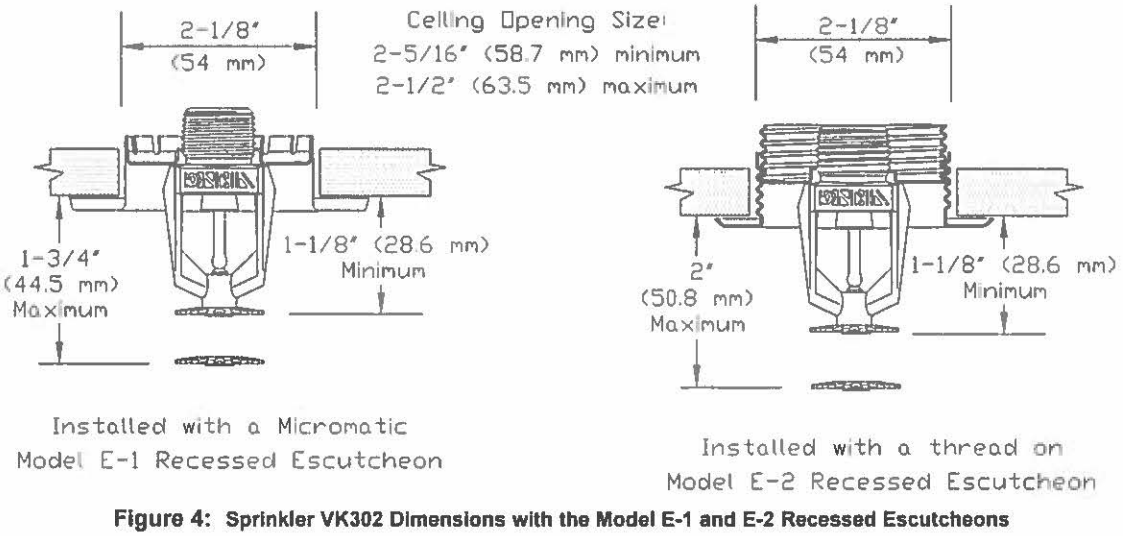

Figure 4: Sprinkler VK302 Dimensions with the Model E-1 and E-2 Recessed Escutcheons

RSN: 1039119

Permit #: 2015-991980-CT

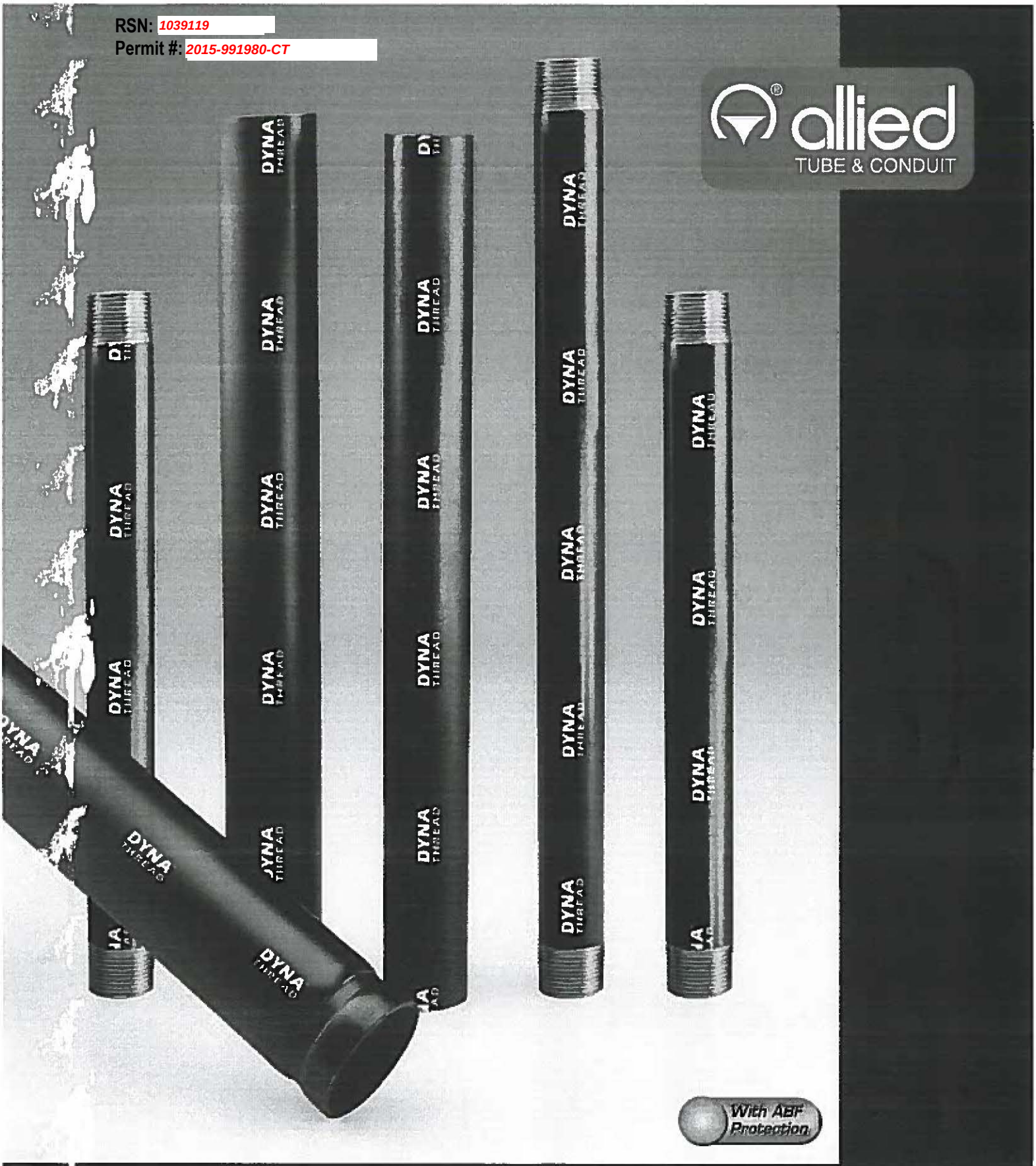

DYNA THREAD®

RSN: 1039119
Permit #: 2015-991980-CT

Dyna-Thread®

Full Line Sch-40 Replacement

Dyna-Thread® offers the life expectancy of Sch-40 with superior hydraulics and greater value.

Dyna-Thread sprinkler pipe represents an engineering advancement for the sprinkler pipe industry. It combines the safety and longevity of traditional Sch-40 pipe with quality and superior hydraulic advantages.

Comparison to Schedule 40

- Dyna-Thread's inside diameter is up to 3.6% larger than Sch-40 giving it superior hydraulics. And, when used in combination with Dyna-Flow pipe, down sizing often occurs.

  Dyna-Thread is fully listed and approved by UL, ULC, and FM for fire sprinkler applications.
- The life expectancy of Dyna-Thread and Sch-40 are equal based on the calculated wall thicknesses per UL.
- The consistent quality of steel used to make Dyna-Thread facilitates smooth threading and lower maintenance costs.
- The exterior of Dyna-Thread is protected by a clean, durable mill coating for extended shelf life and easy paint application.
- With its increased strength and lighter weight, Dyna-Thread reduces installation fatigue and is ideal for retro-fit applications.

Corrosion Resistance Ratio (CRR) is a UL (Underwriters Laboratory) term for the estimated life expectancy of a pipe joint. This is based on the calculated wall thickness at the base of the first exposed thread, assumed to be the weakest point of the pipe length. Dyna-Thread and Sch-40 have the same calculated wall thicknesses at this point and are both assigned the same CRR of 1.00.

The internal surface of all black Allied Tube & Conduit Fire Sprinkler pipe products up to 4.5000" in diameter is coated with our new Antibacterial Formula, "ABF". In scientific laboratory test, ABS proved to have superior resistance to microbial colonization of pipe walls, thereby delaying or possibly preventing the onset of Microbiologically Influenced corrosion (MIC) when the First Sprinkler System is first installed.

Listed Approved Listed

Comparison to L.W.T. Pipes

- More wall thickness at the thread (CRR=1.00) gives Dyna-Thread better life expectancy than lightwall threadable pipe joints.
- Unlike lightwall threadable pipe, Dyna-Thread has no thread gauge warning.
- Dyna-Thread is approved for standard hanger spacing (15 ft. O.C.), can be used as earthquake sway bracing, and is safe to use as drops.
- Dyna-Thread is safer to weld on.
- Dyna-Thread is more widely accepted than lightwall threadable where Sch-40 is specified.

Specifications & Approvals

Super 40/Dyna-Thread pipe is manufactured to meet: ASTM A-135, Grade A and is in compliance with NFPA-13. All sizes of Super 40/Dyna-Thread are rated at 300 psi working pressure. Super 40/Dyna-Thread is UL and ULC Listed for wet, dry deluge and pre-action sprinkler systems and FM Approved for use in wet systems. Super 40/Dyna-Thread can be "hot-dip" galvanized to meet FM requirement for dry systems. Super 40/Dyna-Thread is approved for all threaded couplings and welded outlets and is suitable for all roll-grooved, and plain-end fittings. (See listing information).

Specifications

NPS *In; mm*	Nominal I.D. *In; mm*	Wt. *Lbs/Ft; Kg/m*	Wt. (H2O Filled) *Lbs/Ft; Kg/m*	Pcs/ *Lift*	Wt/Lift (21') *Lbs; Kg*	Wt/Lift (24') *Lbs; Kg*	Wt/Lift (25') *Lbs; Kg*
1"	1.080	1.330	1.75	70	1955	2234	2327
25	*27.4*	*2.0*	*2.60*	*70*	*887*	*1013*	*1056*
1¼"	1.408	1.870	2.54	51	2002	2288	2384
32	*35.8*	*2.8*	*3.78*	*51*	*908*	*1038*	*1081*
1½"	1.639	2.290	3.22	44	2115	2418	2519
40	*41.6*	*3.4*	*4.79*	*44*	*959*	*1097*	*1143*
2"	2.104	3.050	4.57	30	1921	2196	2287
50	*53.4*	*4.5*	*6.80*	*30*	*871*	*996*	*1037*

tyco / Flow Control

allied TUBE & CONDUIT

16100 S. Lathrop • Harvey, IL 60426
11350 Norcom Rd. • Philadelphia, PA 19154
2525 N. 27 th Ave. • Phoenix, AZ 85009

Customer Service:
(800) 882-5543
Fax 708-339-1806

90° ELBOW

SPF/ANVIL

AnvilStar
Fire Products Division of Anvil International

Ductile Iron



MATERIAL SPECIFICATIONS

Ductile iron threaded fittings are UL & ULC Listed & Factory Mutual Approved for 500 psi service.

Ductile iron per ASTM A536 Class 65-45-12

Dimensions conform to ASME B16.14

Threads are NPT per ANSI/ASME B1.20.1.

NOTICE Ductile iron fittings have higher tensile strength than that of steel pipe. Therefore, over tightening can cause damage to pipe threads which may cause leakage. Ductile iron fittings should be tightened three turns beyond hand tight, but no more than four turns.

UL ULC FM
APPROVED

For Listing/Approval Details and Limitations visit our Web Site www.anvilintl.com or contact an Anvil®/AnvilStar™ Sales Representative.

90° ELBOW

Nominal Size	Anvil Item Number	Universal Number	Max. Working Pressure*	Dimensions		Approx. Wt. Each
				A	B	
in. (mm)			PSI (kPa)	in. (mm)	in. (mm)	Lbs. (kg)
1 (25)	840000004	0890033	500 (3450)	1.50 (38.10)	1.50 (38.10)	0.62 (0.28)
1¼ (32)	840000012	0890044	500 (3450)	1.75 (44.45)	1.75 (44.45)	0.90 (0.41)
1½ (40)	840000020	0890055	500 (3450)	1.94 (49.276)	1.94 (49.276)	1.20 (0.54)
2 (50)	840000038	0890066	500 (3450)	2.25 (57.15)	2.25 (57.15)	1.85 (0.84)

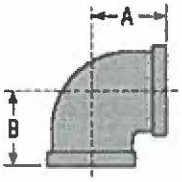

* UL, ULC & FM Pressure Ratings

For additional listings and approvals, see the technical data section.

RSN: 1039119
Permit #: 2015-991980-CT

Victaulic

IPS CARBON STEEL PIPE HOLE CUT PRODUCTS 10.52

Style 922 FireLock™ Outlet-T

PRODUCT DESCRIPTION



See Victaulic publication 10.01 for details.

The Style 922 Outlet-T provides a convenient method of incorporating ½, ¾, and 1" (15, 20 and 25 mm) outlets for directly connecting sprinkler heads, drop nipples, sprigs, gauges, drains and other outlet products. Available for 1¼ through 2½" (32 to 65 mm) piping systems, Style 922 outlets are UL/ULC Listed, LPC, Vds/FM approved for branch connections on wet and dry systems.

The locating collar engages into the hole prepared in the pipe. When tightened, the assembly compresses the gasket onto the OD of the pipe. Style 922 Outlet-T is rated to 175 psi (1200 kPa) for fire protection systems.

Style 922 is suitable for use on standard, lightwall, Schedule 5 and other specialty pipes.* It is supplied with a clear, rust inhibitive coating. Contact Victaulic for other optional coatings.

*Consult Section 10.01 for specific listings/approvals.

DIMENSIONS

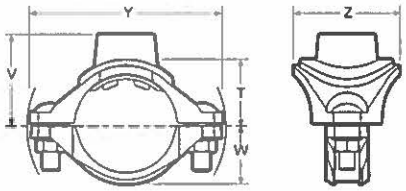

Nominal Size Inches/mm Run × Branch FPT†	Required Hole Saw Size	Dimensions – Inches/millimeters T*	V	W	Y	Z	Approx. Weight Each lbs/kg
1¼ × ½	1⅜₁₆	1.30	1.83	1.10	3.87	2.56	1.0
32 × 15	30.2	33.0	46.5	27.9	98.3	65.0	0.45
1¼ × ¾	1⅜₁₆	1.28	1.83	1.10	3.87	2.56	1.1
32 × 20	30.2	32.5	46.5	27.9	98.3	65.0	0.50
1¼ × 1	1⅜₁₆	1.52	2.18	1.10	3.87	2.56	1.2
32 × 25	30.2	38.6	55.4	27.9	98.3	65.0	0.54
1½ × ½	1⅜₁₆	1.42	1.95	1.22	4.08	2.56	1.2
40 × 15	30.2	36.1	49.5	31.0	103.6	65.0	0.54
1½ × ¾	1⅜₁₆	1.40	1.95	1.22	4.08	2.56	1.2
40 × 20	30.2	35.6	49.5	31.0	103.6	65.0	0.54
1½ × 1	1⅜₁₆	1.64	2.30	1.22	4.08	2.56	1.3
40 × 25	30.2	41.7	58.4	31.0	103.6	65.0	0.59
2 × ½	1⅜₁₆	1.66	2.19	1.46	4.60	2.56	1.3
50 × 15	30.2	42.2	55.6	37.1	116.8	65.0	0.59
2 × ¾	1⅜₁₆	1.64	2.19	1.46	4.60	2.56	1.4
50 × 20	30.2	41.7	55.6	37.1	116.8	65.0	0.64
2 × 1	1⅜₁₆	1.88	2.54	1.46	4.60	2.56	1.5
50 × 25	30.2	47.8	64.5	37.1	116.8	65.0	0.68
2½ × ½	1⅜₁₆	1.91	2.44	1.71	5.40	2.56	1.6
65 × 15	30.2	48.5	62.0	43.4	137.2	65.0	0.73
2½ × ¾	1⅜₁₆	1.89	2.44	1.71	5.40	2.56	1.6
65 × 20	30.2	48.0	62.0	43.4	137.2	65.0	0.73
2½ × 1	1⅜₁₆	2.13	2.79	1.71	5.40	2.56	1.6
65 × 25	30.2	54.1	70.9	43.4	137.2	65.0	0.73

Victaulic female threaded products are designed to accommodate standard NPT or BSPT (optional) male pipe threads only. Use of male threaded products with special features, such as probes, dry pendent sprinkler heads, etc., should be verified as suitable for use with this Victaulic product. Failure to verify suitability in advance may result in assembly problems or leakage.
*Center of run to engaged pipe end for NPT threads (dimensions are approximate).

VICTAULIC® IS AN ISO 9001 CERTIFIED COMPANY

Victaulic Company of America
Phone: 1-800-PICK-VIC (1-800-742-5842)
Fax: 610-250-8817
e-mail:pickvic@victaulic.com

Victaulic Company of Canada
Phone: 416-675-5575
Fax: 416-675-5565
e-mail: viccanada@victaulic.com

Victaulic Europe
Phone:32-9-381-1500
Fax: 32-9-380-4438
e-mail: viceuro@victaulic.be

Victaulic America Latina
Phone: 610-559-3300
Fax: 610-559-3608
e-mail: vical@victaulic.com

Victaulic Asia Pacific
Phone: 65-235-3035
Fax: 65-235-0535
e-mail: vicap@victaulic.com

3355 Rev A 3/02
® Registered Trademark of Victaulic © Copyright 2002 Victaulic Printed in U.S.A.

RSN: 1039119
Permit #: 2015-991980-CT

PERFORMANCE

Nominal Size Inches/mm	Equivalent Length of 1" Pipe Feet meters
1¼ × 1	8.5
1½ × 1	8.5
2 × 1	8.5
2½ × 1	8.5

MATERIAL SPECIFICATIONS

Housing: Ductile iron conforming to ASTM A-395, grade 65-45-15, and ASTM A-536, grade 65-45-12

Gasket:

❑ **Grade "E" EPDM - Type A** (Violet color code). FireLock products have been Listed by Underwriters Laboratories Inc. and Approved by Factory Mutual Research for wet and dry (oil free air) sprinkler services up to the rated working pressure using the Grade "E" Type A Gasket System.

Bolts/Nuts: Heat treated carbon steel zinc electroplated track head bolt with a minimum tensile strength of 110,000 psi (758340 kPa). Flanged hex nut, zinc electroplated.

This product shall be manufactured by Victaulic Company. All products shall be installed in accordance with current Victaulic installation/assembly instructions. Victaulic reserves the right to change product specifications, designs and standard equipment without notice and without incurring obligations.

RSN: 1039119
Permit #: 2015-991980-CT

TOLCO
INCORPORATED
CORONA, CA (909)737-5599

Fig. 65 and Fig. 66
Reversible C-Type Beam Clamps
3/4 and 1-1/4 Inch Throat Openings

Size Range – (Fig. 65 and Fig. 66) 3/8, 1/2, AND 5/8 inch rod.
Material – Carbon Steel with hardened cup point set screw and jam nut.
Function – Recommended for hanging from steel beam where flange thickness does not exceed 3/4 inch (Fig. 65) or 1-1/4" (Fig. 66)
Features – All steel construction eliminates structural deficiencies associated with casting type beam clamps. May be used on top or bottom flange of the beam. (Beveled lip allows hanging from top flange where clearance is limited.) May be installed with set screw in up or down position. Offset design permits unlimited rod adjustment by allowing the rod to be threaded completely through the clamp. Open design permits inspection of thread engagement.
Approvals– Underwriters' Laboratories Listed in the USA (UL) and Canada (cUL). Factory Mutual Engineering Approved. Conforms to Federal Specification Society SP-69, type 19 and 23. Exceeds requirements of the National Fire Protection Association (NFPA), Pamphlet #13, 3/8 inch rod will support 1/2 thru 4 inch pipe, 1/2 inch rod will support 1/2 thru 8 inch pipe.
Finish – Plain.
Note—Available in Electro-Galvanized and HDG finish.
Order By—Figure number, rod size, and finish.
Fig. 65 Patent #4,570,885

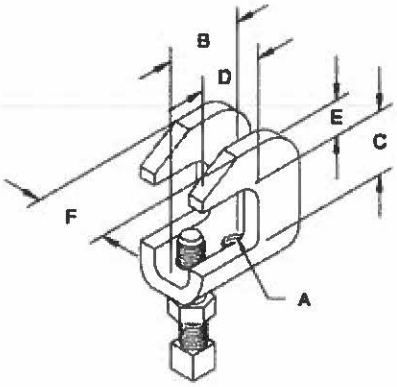

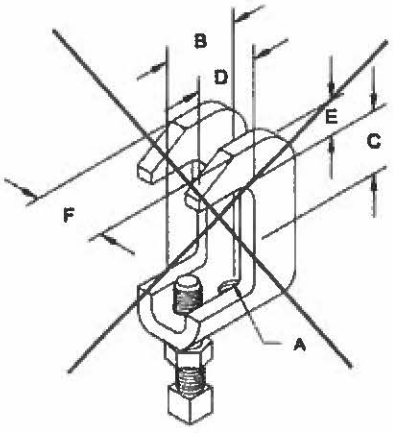

FIG. 65 TABLE

ROD SIZE A	B	C	D	E	F	MAX. REC. LOAD LBS.*	APPROX WT./100
3/8	1-3/16	3/4	1	7/16	1	610	28
1/2	1-1/2	3/4	1	9/16	1-1/4	1130	55
5/8	1-1/2	3/4	1	9/16	1-1/4	1130	55

*Max. loads for clamp with set screw in up or down position.

FIG. 66 TABLE

ROD SIZE A	B	C	D	E	F	MAX. REC. LOAD LBS.*	APPROX WT./100
3/8	1-3/16	1-1/4	1	7/16	1	610	28
1/2	1-1/2	1-1/4	1	9/16	1-1/4	1130	55
5/8	1-1/2	1-1/4	1	9/16	1-1/4	1130	55

*Max. loads for clamp with set screw in up or down position.

RSN: 1039119
Permit #: 2015-991980-CT

TOLCO
INCORPORATED
CORONA, CA (909)737-5599

Fig. 98
Rod Stiffener

Size Range—Secures 3/8 thru 7/8 inch hanger rod.
Material – Carbon Steel.
Function—Secures channel to hanger rod for vertical seismic bracing.
Finish—Electro Galvanized.
Order By—Figure number.
Note—Available in HDG finish or Stainless Steel materials.

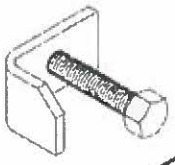

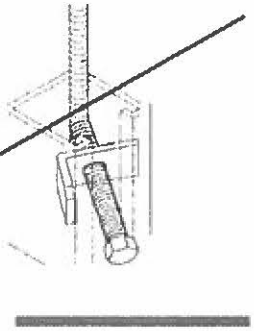

Fig. 99
All Thread Rod Cut To Length

Size Range-3/8 thru 7/8 inch rod in 1 inch increments.
Material – Carbon Steel.
Maximum Temperature-750°F.
Finish— Plain.
Order By—Figure number, rod diameter, rod length, and finish.
Note—Available in Electro-Galvanized and HDG finish or Stainless Steel materials.



ROD SIZE	MAX. REC. LOAD LBS. FOR SERVICE TEMPS 650°F	750°F
3/8	610	540
1/2	1130	1010
5/8	1810	1610
3/4	2710	2420
7/8	3770	3360

Fig. 100
All Thread Rod Full Lengths

Size Range-3/8 thru 7/8 inch rod in 10 foot lengths.
Material – Carbon Steel.
Maximum Temperature-750°F.
Finish— Plain.
Order By—Figure number, rod diameter, and finish. Note—Available in Electro-Galvanized and HDG finish or Stainless Steel materials.

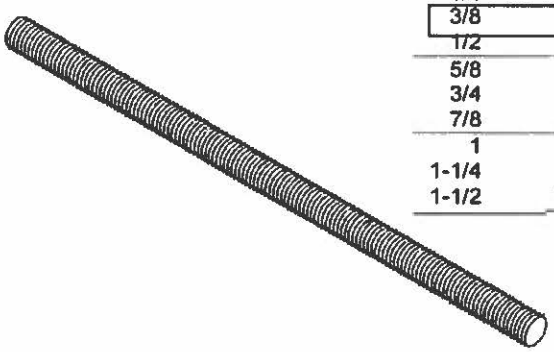

ROD SIZE	MAX. REC. LOAD LBS. FOR SERVICE TEMPS 650°F	750°F	APPROX. WEIGHT PER 100FT.
1/4	240	215	12
3/8	610	540	29
1/2	1130	1010	53
5/8	1810	1610	84
3/4	2710	2420	123
7/8	3770	3360	169
1	4960	4420	222
1-1/4	8000	7140	360
1-1/2	11630	10370	510

RSN: 1039119
Permit #: 2015-991980-CT

Tolco
INCORPORATED
CORONA, CA (909)737-5599

Fig. 200

®C® "Trimline" Adjustable Band Hanger

Size Range — 1/2 thru 8 inch pipe.
Material — Carbon Steel, Mil. Galvanized to G-90 specifications.
Function — For fire sprinkler and other general piping purposes. Knurled swivel nut design permits hanger adjustment after installation.
Features
• (1/2 thru 2 inch) Flared edges ease installation for all pipe types and protect CPVC plastic pipe from abrasion. Captured design keeps adjusting nut from separating with hanger. Hanger is easily installed around pipe.
• (2-1/2 thru 8 inch) Spring tension on nut holds it securely in hanger before installation. Adjusting nut is easily removed.
Approvals— Underwriters' Laboratories Listed (1/2" thru 8") in the U.S. (UL) and Canada (cUL) for steel and CPVC plastic pipe and Factory Mutual Engineering Approved (3/4" thru 8"). Conforms to Federal Specifications WW-H-171 E, Type 10, and Manufacturers Standardization Society SP-69, type 10.
Maximum Temperature - 650°F.
Finish — Mil. Galvanized, for Stainless Steel materials order Tolco Fig. 200WON.
Order By— Figure number and pipe size.

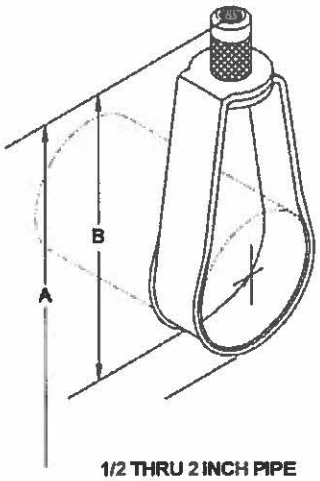

1/2 THRU 2 INCH PIPE

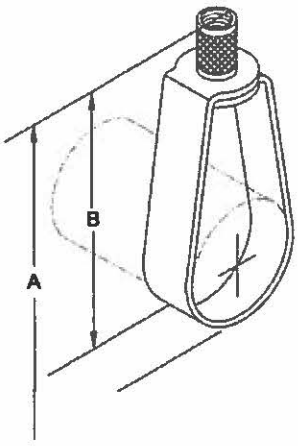

2 1/2 THRU 8 INCH PIPE

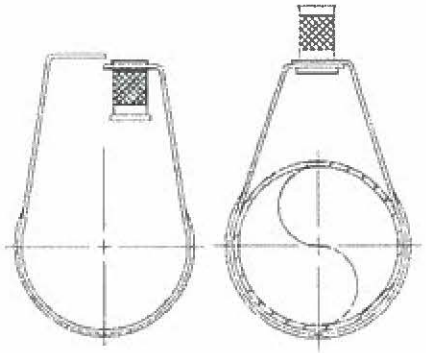

PIPE SIZE	ROD SIZE INCH	ROD SIZE METRIC*	A	B	MAX. REC. LOAD LBS.	APPROX. WT./100
1/2	3/8	8mm or 10mm	3-1/8	2-5/8	400	11
3/4	3/8	8mm or 10mm	3-1/8	2-1/2	400	11
1	3/8	8mm or 10mm	3-3/8	2-5/8	400	12
1-1/4	3/8	8mm or 10mm	3-3/4	2-7/8	400	13
1-1/2	3/8	8mm or 10mm	3-7/8	2-7/8	400	14
2	3/8	8mm or 10mm	4-1/2	3	400	15
2-1/2	3/8	10mm	5-5/8	4-1/8	600	27
3	3/8	10mm	5-7/8	4	600	29
3-1/2	3/8	10mm	7-3/8	5-1/4	600	34
4	3/8	10mm	7-3/8	5	1000	35
5	1/2	12mm	9-1/8	6-1/4	1250	66
6	1/2	12mm	10-1/8	6-3/4	1250	73
8	1/2	12mm	13-1/8	8-3/4	1250	136

*Order Fig. 200M

RSN: 1039119
Permit #: 2015-991980-CT

Contractor's Material and Test Certificate for Aboveground Piping

PROCEDURE

Upon completion of work, inspection and tests shall be made by the contractor's representative and witnessed by the property owner or their authorized agent. All defects shall be corrected and system left in service before contractor's personnel finally leave the job.

A certificate shall be filled out and signed by both representatives. Copies shall be prepared for approving authorities, owners, and contractor. It is understood the owner's representative's signature in no way prejudices any claim against contractor for faulty material, poor workmanship, or failure to comply with approving authority's requirements or local ordinances.

Property name	Date
Property address	

Plans

Accepted by approving authorities (names)

Address

Installation conforms to accepted plans	☒ Yes	☐ No
Equipment used is approved	☒ Yes	☐ No
If no, explain deviations		

Instructions

Has person in charge of fire equipment been instructed as to location of control valves and care and maintenance of this new equipment?	☒ Yes	☐ No
If no, explain		
Have copies of the following been left on the premises?	☐ Yes	☐ No
1. System components instructions	☐ Yes	☐ No
2. Care and maintenance instructions	☐ Yes	☐ No
3. NFPA 25	☐ Yes	☐ No

Location of system

Supplies buildings

Sprinklers

Make	Model	Year of manufacture	Orifice size	Quantity	Temperature rating
Viking	Micro Ace	2013	1/2"		155

Pipe and fittings

Type of pipe Youngstown Sch 30

Type of fittings Anvil

Alarm valve or flow indicator

N/A

Alarm device			Maximum time to operate through test connection	
Type	Make	Model	Minutes	Seconds

Dry pipe operating test

Dry valve			Q. O. D.		
Make	Model	Serial no.	Make	Model	Serial no.
N/A					

	Time to trip through test connection[a,b]		Water pressure	Air pressure	Trip point air pressure	Time water reached test outlet[a,b]		Alarm operated properly	
	Minutes	Seconds	psi	psi	psi	Minutes	Seconds	Yes	No
Without Q.O.D.									
With Q.O.D.									

If no, explain

© 2012 National Fire Protection Association

[a] Measured from time inspector's test connection is opened.
[b] NFPA 13 only requires the 60-second limitation in specific sections.

FIGURE 25.1 Contractor's Material and Test Certificate for Aboveground Piping.

RSN: 1039119
Permit #: 2015-991980-CT

Deluge and preaction valves — N/A

Operation ☐ Pneumatic ☐ Electric ☐ Hydraulics

Piping supervised ☐ Yes ☐ No | Detecting media supervised ☐ Yes ☐ No

Does valve operate from the manual trip, remote, or both control stations? ☐ Yes ☐ No

Is there an accessible facility in each circuit for testing? ☐ Yes ☐ No | If no, explain

Make	Model	Does each circuit operate supervision loss alarm? Yes	No	Does each circuit operate valve release? Yes	No	Maximum time to operate release: Minutes	Seconds

Pressure-reducing valve test — N/A

Location and floor	Make and model	Setting	Static pressure: Inlet (psi)	Static pressure: Outlet (psi)	Residual pressure (flowing): Inlet (psi)	Residual pressure (flowing): Outlet (psi)	Flow rate: Flow (gpm)

Backflow device forward flow test

Indicate means used for forward flow test of backflow device: _____

When means to test device was opened, was system flow demand created? ☐ Yes ☐ No ☐ N/A

Test description

Hydrostatic: Hydrostatic tests shall be made at not less than 200 psi (13.6 bar) for 2 hours or 50 psi (3.4 bar) above static pressure in excess of 150 psi (10.2 bar) for 2 hours. Differential dry pipe valve clappers shall be left open during the test to prevent damage. All aboveground piping leakage shall be stopped.

Pneumatic: Establish 40 psi (2.7 bar) air pressure and measure drop, which shall not exceed 1½ psi (0.1 bar) in 24 hours. Test pressure tanks at normal water level and air pressure and measure air pressure drop, which shall not exceed 1½ psi (0.1 bar) in 24 hours.

Tests

All piping hydrostatically tested at ____ psi (____ bar) for ____ hours ☐ Yes ☐ No | If no, state reason

Dry piping pneumatically tested ☐ Yes ☐ No

Equipment operates properly ☐ Yes ☐ No

Do you certify as the sprinkler contractor that additives and corrosive chemicals, sodium silicate or derivatives of sodium silicate, brine, or other corrosive chemicals were not used for testing systems or stopping leaks? ☒ Yes ☐ No

Drain test	Reading of gauge located near water supply test connection: ____ psi (____ bar)	Residual pressure with valve in test connection open wide: ____ psi (____ bar)

Underground mains and lead-in connections to system risers flushed before connection made to sprinkler piping

Verified by copy of the Contractor's Material and Test Certificate for Underground Piping. ☐ Yes ☐ No | Other | Explain

Flushed by installer of underground sprinkler piping ☐ Yes ☐ No

If powder-driven fasteners are used in concrete, has representative sample testing been satisfactorily completed? ☐ Yes ☐ No | If no, explain

Blank testing gaskets

Number used	Locations	Number removed

Welding — N/A

Welding piping ☐ Yes ☐ No

If yes . . .

Do you certify as the sprinkler contractor that welding procedures used complied with the minimum requirements of AWS B2.1, ASME Section IX *Welding and Brazing Qualifications*, or other applicable qualification standard as required by the AHJ? ☐ Yes ☐ No

Do you certify that all welding was performed by welders or welding operators qualified in accordance with the minimum requirements of AWS B2.1, ASME Section IX *Welding and Brazing Qualifications*, or other applicable qualification standard as required by the AHJ? ☐ Yes ☐ No

Do you certify that the welding was conducted in compliance with a documented quality control procedure to ensure that (1) all discs are retrieved; (2) that openings in piping are smooth, that slag and other welding residue are removed, (3) the internal diameters of piping are not penetrated, (4) completed welds are free from cracks, incomplete fusion, surface porosity greater than 1/16 in. diameter, undercut deeper than the lesser of 25% of the wall thickness or 1/32 in.; and (5) completed circumferential butt weld reinforcement does not exceed 3/32 in.? ☐ Yes ☐ No

© 2012 National Fire Protection Association NFPA 13 (p. 2 of 3)

FIGURE 25.1 *Continued*

RSN: 1039119
Permit #: 2015-991980-CT

Cutouts (discs)	Do you certify that you have a control feature to ensure that all cutouts (discs) are retrieved? ☐ Yes ☐ No	
Hydraulic data nameplate	Nameplate provided ☐ Yes ☒ No	If no, explain: Existing System
Sprinkler contractor removed all caps and straps? ☒ Yes ☐ No		
Remarks	Date left in service with all control valves open	
Signatures	Name of sprinkler contractor: All Pro Fire Protection, LLC	
	Tests witnessed by	
	The property owner or their authorized agent (signed)	Title / Date
	For sprinkler contractor (signed)	Title / Date
Additional explanations and notes		

© 2012 National Fire Protection Association NFPA 13 (p. 3 of 3)

FIGURE 25.1 *Continued*