Permit: 2021-2063821-CT
RSN: 1584536
Sheet 1 of 20

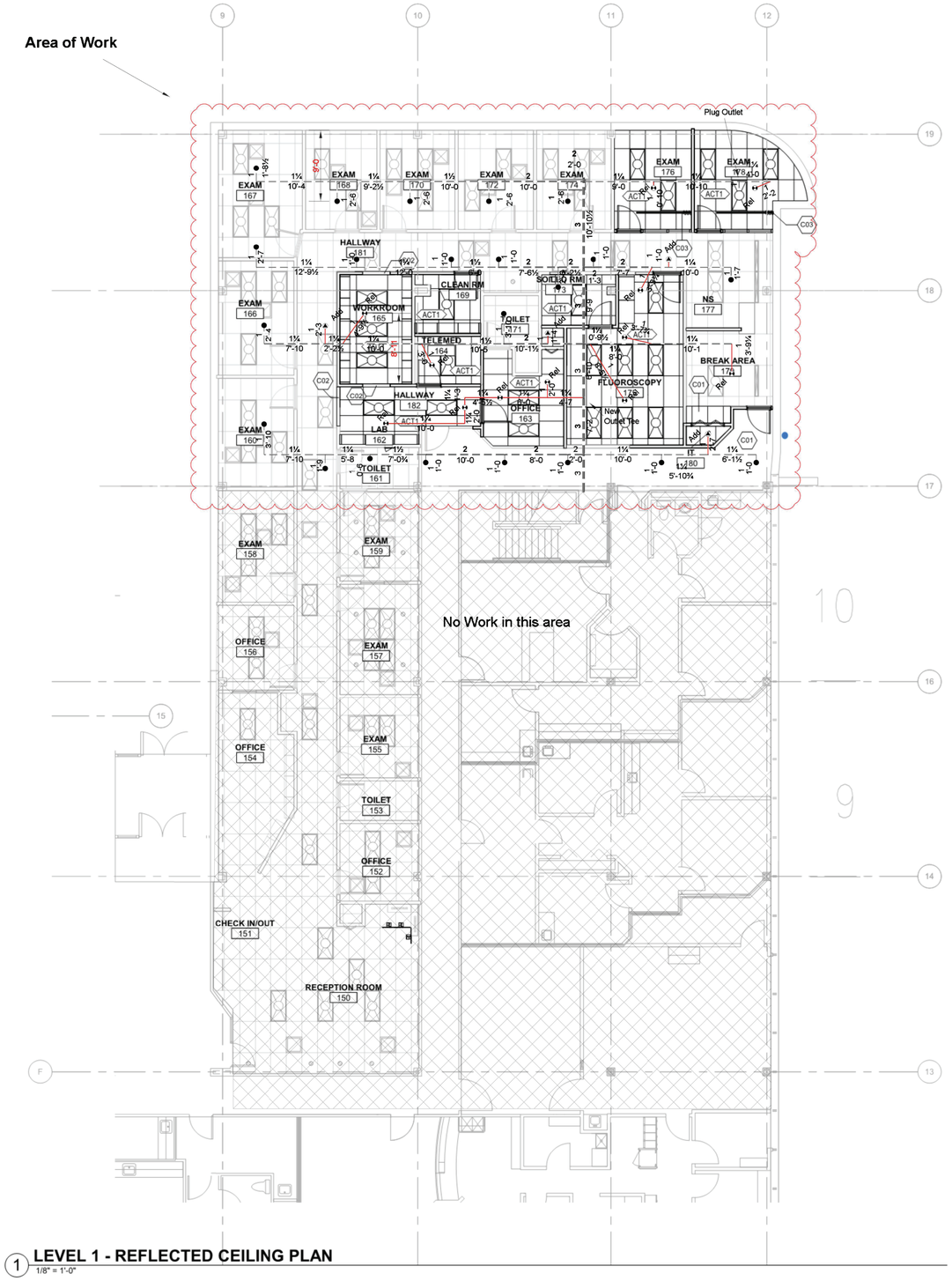

1 **LEVEL 1 - REFLECTED CEILING PLAN**
1/8" = 1'-0"

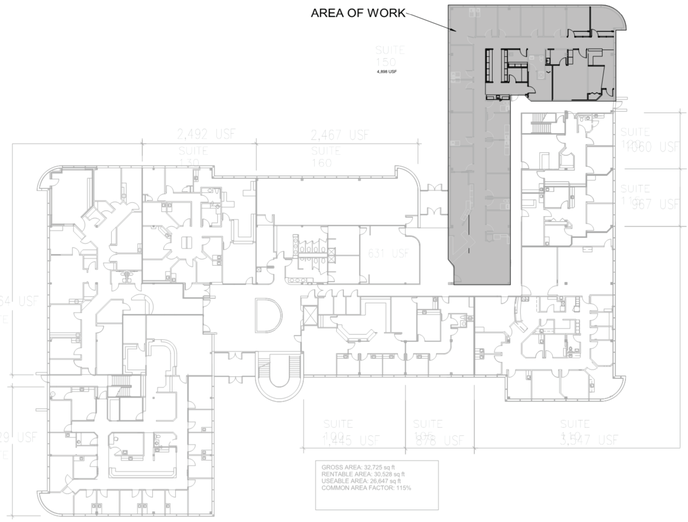

1 **LEVEL 1 - OVERALL KEY PLAN**
Not To Scale

CODES AND STANDARDS

2015 INTERNATIONAL BUILDING CODE
2015 INTERNATIONAL FIRE CODE
2013 NFPA #13

BUILDING INFORMATION

BUILDING TYPE: II-B FULLY SPRINKLERED
OCCUPANCY: B - OFFICE- 1,445 FT2

SCOPE OF WORK-

THIS EXISTING TENANT AREA IS BEING REMODELED.
RELOCATED SPRINKLERS ARE BEING SUPPLIED FROM EXISTING 1" OUTLETS
ALL ADDED OR RELOCATED SPRINKLERS WILL BE NEW STANDARD RESPONSE TO MATCH EXISTING
ALL NEW AND EXISTING SPRINKLERS ARE TO BE STANDARD RESPONSE

HYDRAULIC CALCULATIONS:

SPRINKLER SYSTEM:

NEW HYDRAULIC CALCULATIONS HAVE NOT BEEN PROVIDED

THE EXISTING HYDRAULIC CALCULATIONS ARE BASED ON
LIGHT HAZARD OCCUPANCY.

THE MODIFICATIONS SHOWN ARE CONSISTENT WITH A LIGHT HAZARD DESIGN.
MODIFICATIONS DO NO HAVE AN ADVERSE AFFECT ON THE SYSTEM.

NEW PIPING NOTES

1. NEW PIPING IS TO BE SCHEDULE 40 TO MATCH THE EXISTING PIPING

HANGERS

PIPE HANGERS SHALL BE IN ACCORDANCE WITH NFPA #13 AND ARE LISTED BY U/L LABORATORIES. HANGER ROD DIAMETERS SHALL BE AS FOLLOWS:
1" THROUGH 4" PIPE 3/8" ROD

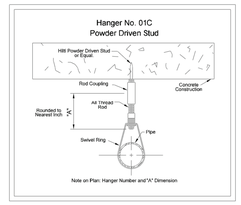

Remodel Floor Plan

Scale 1/8" = 1'-0"

0 2' 4' 8'

– – – Existing Piping
—— New Schedule 40 Pipe

Existing Sprinkler Legend

Symbol	Quantity	Type	Size	Temperature	Finish	K-Factor	Response	Model	SIN	Note
●	22	Pendent	½	165°F	Chrome	5.6	Standard	G/F1	R1015	Reliable Recessed

Relocated Sprinkler Legend

Symbol	Quantity	Type	Size	Temperature	Finish	K-Factor	Response	Model	SIN	Note
◗◖	12	Pendent	½	165°F	Chrome	5.6	Standard	G/F1	R1015	Reliable Recessed
	Total = 12									

Added Sprinkler Legend

Symbol	Quantity	Type	Size	Temperature	Finish	K-Factor	Response	Model	SIN	Note
▲	4	Pendent	½	165°F	Chrome	5.6	Standard	G/F1	R1015	Reliable Recessed
	Total = 4									

City of Aurora Building Division
Counter Permit intake by: TAC
Date: Oct 20, 2021
RSN: 1584536
Permit: 2021-2063821-CT
2015 INTERNATIONAL CODES & 2018 NEC Scope of permit to be field verified

Reviewed By:
Howard Hansen
Nicet Certification #074855
Water Based Systems Layout - Level III
Certification Expires 11-1-22

CHECKED BY
Howard Hansen
Nicet Level 3 #074855

AnS FIRE PROTECTION
11480 Kalispell Street
Commerce City, Colorado 80022
Phone 720-435-3663
State Registration #21-S-10772

NORTH

ALLPRIA
1400 S. POTOMAC ST
SUITE 150
AURORA, CO 80012

SUITE 150 REMODEL PLAN

DRAWING NO.
FP-1
of 1

DATE 10/18/21

Permit: 2021-2063821-CT
RSN: 1584536
Sheet 2 of 20

Allpria

1400 S. Potomac St
Suite 150
Aurora, Colorado

Equipment Submittal

AnS Fire Protection
11480 Kalispell Street
Commerce City, Colorado 80022
720-435-3663

Allpria
1400 S. Potomac St
Suite 150
Aurora, Colorado

INDEX

ITEM	MAKE	MODEL
NEW PIPE	**BULLMOOSE**	**PIPE SCHED 40**
NEW SPRINKLERS	**RELIABLE**	**RECESSED PENDENT** SR 165 G/F1 K5.6 CHROME ½" R1015
FITTINGS	**ANVIL**	THREADED FITTINGS, DI, CI, MI
	VICTAULIC	OUTLET TEE #922
HANGERS	**PHD**	#141 RING HANGER #20 & #21 ALL THREAD ROD
	HILTI	POWDER DRIVEN STUD W10-30-32P10

Permit: 2021-2063921-CT
RSN: 15845536
Sheet 4 of 20

SCHEDULE 10 & 40

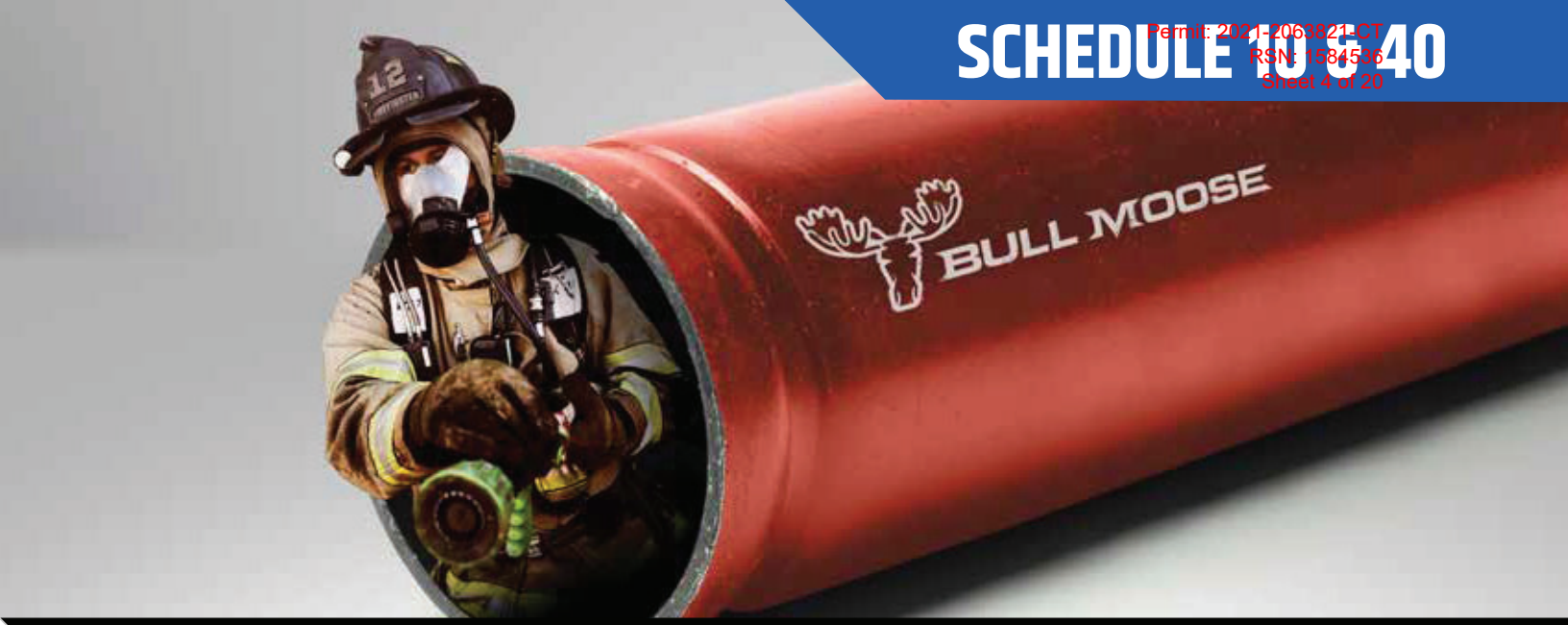

Always ready to protect your most valuable assets.

As the leading supplier of steel sprinkler pipe, we understand that there are no second chances in fire suppression. You need products of enduring quality and exceptional strength–plus reliable service. You need Bull Moose.

Bull Moose Fire Sprinkler Pipe Product Information

Nominal Pipe Size (Inches)		1"	1-1/4"	1-1/2"	2"	2-1/2"	3"	4"	6"	8"
SCHEDULE 10	O.D. (in)	1.315	1.660	1.900	2.375	2.875	3.500	4.500	6.625	8.625
	I.D. (in)	1.097	1.442	1.682	2.157	2.635	3.260	4.260	6.357	8.249
	Empty Weight (lb/ft)	1.410	1.810	2.090	2.640	3.530	4.340	5.620	9.290	16.940
	Water Filled Weight (lb/ft)	1.820	2.518	3.053	4.223	5.893	7.957	11.796	23.038	40.086
	C.R.R.	15.27	9.91	7.76	6.27	4.92	3.54	2.50	1.158	1.805
	Pieces per Lift	91	61	61	37	30	19	19	10	7
	Lift Weight (lbs) 21' lengths	2,695	2,319	2,677	2,051	2,224	1,732	2,242	1,951	2,490
	Lift Weight (lbs) 24' lengths	3,079	2,650	3,060	2,344	2,542	1,979	2,563	2,230	2,848
	Lift Weight (lbs) 25' lengths	3,208	2,760	3,187	2,442	2,648	2,062	2,670		

NPS (In.)	1"	1-1/4"	1-1/2"	2"	2-1/2"	3"	4"
SCHEDULE 40	1.315	1.660	1.900	2.375	2.875	3.500	4.500
	1.049	1.380	1.610	2.067	2.469	3.068	4.026
	1.680	2.270	2.720	3.660	5.800	7.580	10.800
	2.055	2.918	3.602	5.114	7.875	10.783	16.316
	1.00	1.00	1.00	1.00	1.00	1.00	1.00
	70	51	44	30	30	19	19
	2,470	2,431	2,513	2,306	3,654	3,024	4,309
	2,822	2,778	2,872	2,635	4,176	3,456	4,925
	2,940	2,894	2,992	2,745	4,350	3,601	5,130

SCHEDULE 10 & 40 ADVANTAGES:

- UL listed (US & Canada) and FM approved
- ASTM A135 and A795 Type E, Grade A Certified
- Complies with NFPA-13, 13R and 14
- Industry-leading hydraulic characteristics
- CRR of 1.0 and greater
- All pipe NDT weld tested

OTHER BENEFITS/SERVICES:

- We have the most stocking locations in the industry, for best delivery and availability
- Plain end or roll groove
- Eddy Guard II™ bacterial-resistant internal coating
- Custom length options
- Hot dipped galvanization
- Reddi-Pipe® red or black pipe eliminates field painting
- Compatible for use in wet, dry, preaction and deluge sprinkler systems
- The only maker with EPDs (to help earn LEED points).

Exclusive maker of Reddi-Pipe®
RED OR BLACK PAINTED PIPE.

CERTIFIED ENVIRONMENTAL PRODUCT DECLARATION UL.COM/EPD

c UL us LISTED

FM APPROVED

NFPA

AFSA American Fire Sprinkler Association

NFSA The Voice of the Fire Sprinkler Industry

BULL MOOSE TUBE

800.325.4467
sales@BullMooseIndustries.com
BullMooseTube.com

Permit: 2021-2063821-CT
RSN: 1584536
Sheet 5 of 20

Reliable®

Model G/F1 Recessed Automatic Sprinkler

Bulletin 120 August 2020

Features

1. Highly decorative and adjustable recessed pendent sprinkler.
2. Rapid and easy installation.
3. Compensating angular ceiling alignment.
4. ¾" (19mm) Adjustment to flush pendent position.
5. ½" (13mm) Adjustment for recessed position with ¼" (6mm) minimum recess.
6. Various finishes available to match any decor.



Listings and Approvals

1. Underwriters Laboratories Inc. (UL)
2. Underwriters' Laboratories of Canada (ULC)
3. NYC BS&A No. 587-75-SA
4. Loss Prevention Council (LPC, UK)
   • XLH, OHI and OHII Occupancies Only

Note: Unless otherwise indicated, approvals are ordinary hazard without limitations. Small orifice sprinklers are limited to light hazard occupancies.

Product Description

Attractively versatile is the description for the Reliable Model G/F1 Recessed Automatic Sprinkler. The Model G/F1 Recessed Sprinkler facilitates a rapid and perfect installation. When this sprinkler is used in place of any standard pendent sprinkler a more attractive and easier installation is the result.

The Model G/F1 Recessed escutcheon is highly adjustable. The two piece construction makes field installation a very easy and rapid task. The escutcheon collar threads onto the sprinkler inlet end and the sprinkler and collar are easily installed into the drop nipple using the Model RC1 Sprinkler Wrench. The escutcheon sleeve is then simply pushed onto the collar after the ceiling panels are installed. This also allows the ceiling panels to later be removed without shutting down the sprinkler system protection, thus facilitating maintenance of above ceiling services.

The impressively large adjustment in the escutcheon eliminates the expense of re-cutting drop nipples as is necessary with the non–adjustable pendent sprinklers.

This recessed sprinkler's small profile does not disrupt the overhead aesthetics, and yet one glance upward gives visual assurance of the finest in fire protection and decorative appearance of an automatic sprinkler system.

The Reliable Model G Automatic Sprinkler is the heart of the Model G/F1 Recessed Sprinkler. This sprinkler utilizes the center strut solder in compression principle of construction. The fusible alloy, captured in the cylinder of a small solder capsule by a stainless steel ball, acts as the trigger of the sprinkler. When the fusible alloys melts, the sprinkler's operating parts spring free from the sprinkler clearing the waterway and allowing the deflector to distribute the discharging water.

Reliable sprinklers should be installed in accordance with the standards of the government body or Authority Having Jurisdiction. The sprinklers must also be installed with the Model RC1 Sprinkler Wrench, specifically designed by Reliable for use with these sprinklers.

Installation Data:

Orifice Size	Nominal K Factor		Thread	Height	Approvals	Sprinkler Identification Number (SIN)
	US	Metric				
½ (15mm)	5.6	80	½" NPT (R ½)	2 7/8" (73mm)	UL, ULC, BS&A, LPC UK	R1015
7/16" (11mm)	4.2	60	½" NPT (R ½)	2 7/8" (73mm)	UL, ULC, BS&A,	R1013
3/8" (9.5mm)	2.8	40	½" NPT (R ½)	2 7/8" (73mm)	UL, ULC, BS&A,	R1011
17/32" (13.5mm)	8.0	115	¾" NPT (R¾)	2 15/16" (74.5mm)	UL, ULC	R1017

Standard Finishes	
Sprinkler	**Escutcheon**
Bronze	Brass Plated
Chrome Plated	Chrome Plated
White Polyester Coated[1]	White Painted

[1] Only frame and deflector are coated, operating parts are chrome plated. UL Listed and BS&A Approved only.

Ordering Information

1. Temperature rating
2. Sprinkler finish
3. Escutcheon finish
4. Orifice size
5. Inlet thread

Note: Sprinkler and escutcheon are packaged separately. Other finishes and colors are available on special order, consult factory for details.

Temperature Ratings

Classification	Sprinkler Temperature		Frame Color	Maximum Ambient Temperature	
	°F	°C	(As Required)	°F	°C
Ordinary	135	57	Uncolored	100	38
Ordinary	165	74	Uncolored	100	38
Intermediate	212	100	White	150	66

Maintenance

Model G/F1 Recessed Sprinklers® should be inspected and the sprinkler system maintained in accordance with NFPA 25. Do not clean sprinklers with soap and water, ammonia or any other cleaning fluids. Remove any sprinkler that has been painted (other than factory applied) or damaged in any way. A stock of spare sprinklers should be maintained to allow quick replacement of damaged or operated sprinklers. Prior to installation, sprinklers should be maintained in the original cartons and packaging to minimize the potential for damage to sprinklers that would cause improper operation or non-operation.

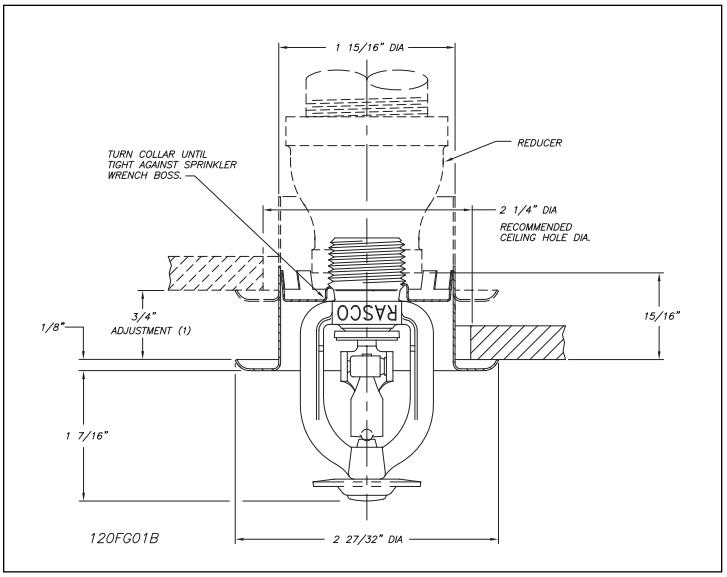

[2] A recessed sprinkler installed directly into a tee reduces the adjustment of the escutcheon.

The equipment presented in this bulletin is to be installed in accordance with the latest published Standards of the National Fire Protection Association, Factory Mutual Research Corporation, or other similar organizations and also with the provisions of governmental codes or ordinances whenever applicable.

Products manufactured and distributed by Reliable have been protecting life and property for over 90 years, and are installed and serviced by the most highly qualified and reputable sprinkler contractors located throughout the United States, Canada and foreign countries.

Manufactured by

Reliable®

The Reliable Automatic Sprinkler Co., Inc.
(800) 431-1588 Sales Offices
(800) 848-6051 Sales Fax
(914) 829-2042 Corporate Offices
www.reliablesprinkler.com Internet Address

Recycled Paper

Revision lines indicate updated or new data.

EG. Printed in U.S.A. 08/20 P/N 9999970013

Permit: 2021-2063821-CT
RSN: 1584536
Sheet 7 of 20

SPF™ Cast Iron Threaded Fittings

UL ULC FM APPROVED

SPF™ Cast Iron Threaded Fittings are UL/ULC Listed and FM Approved for 300 psi service. These fittings are available in a range of styles and specifications. All SPF™ Cast Iron Threaded Fittings dimensions conform to ANSI B16.4 Class 125 requirements, and threads are NPT per ANSI/ASME B1.20.1.



Project Information:		Approval Stamp:
Project: undefined		
Date: undefined	**Phone:** undefined	
Architect / Engineer: undefined		
Contractor: undefined		
Address: undefined		
Notes 1: undefined		
Notes 2: undefined		

 For the latest UL/ULC Listed and FM Approved pressure ratings, versus pipe schedule, go to www.anvilstar.com or contact your local AnvilStar representative

Permit: 2021-2063821-CT
RSN: 1584536
Sheet 8 of 20

SPF™ Ductile Iron Threaded Fittings

UL ULC FM APPROVED

SPF™ Ductile Iron Threaded Fittings are UL/ULC Listed and FM Approved for 500 psi service. These fittings provide a dependable threaded connection and are available in a range of styles and specifications. All SPF™ Ductile Iron Threaded Fittings dimensions conform to ANSI B16.3 Class 150 requirements, and threads are NPT per ANSI/ASME B1.20.1.



Project Information:		Approval Stamp:
Project: undefined		
Date: undefined	**Phone:** undefined	
Architect / Engineer: undefined		
Contractor: undefined		
Address: undefined		
Notes 1: undefined		
Notes 2: undefined		

 For the latest UL/ULC Listed and FM Approved pressure ratings, versus pipe schedule, go to www.anvilstar.com or contact your local AnvilStar representative

Permit: 2021-2063821-CT
RSN: 1584536
Sheet 9 of 20

Anvil® Malleable Iron Threaded and Flanged Fittings

UL ULC FM APPROVED

AnvilStar™ offers the most complete line of Cast Iron and Malleable Iron Threaded Fittings in the industry. Our versatile range of fittings is designed to provide dependable, fire-rated service.

Malleable Iron Fittings are available in a number of classes, including Class 150 (standard weight) and Class 300 XS/XH (with extra-heavy banded pattern fittings). In both classes, all Elbows and Tees 3/8" and larger are 100% gas tested at a minimum of 100 psi (6.9 bar).



Project Information:		Approval Stamp:
Project: undefined		
Date: undefined	**Phone:** undefined	
Architect / Engineer: undefined		
Contractor: undefined		
Address: undefined		
Notes 1: undefined		
Notes 2: undefined		

 For the latest UL/ULC Listed and FM Approved pressure ratings, versus pipe schedule, go to www.anvilstar.com or contact your local AnvilStar representative

Victaulic® FireLock™ Outlet-T
Style 922



1.0 PRODUCT DESCRIPTION

Available Sizes

- 1 ¼ – 2 ½"/DN32 – DN65
- **Threaded Outlet Sizes:** ½"/DN15, ¾"/DN20, and 1"/DN25

NOTE

- IGS Grooved 1"/DN25 Outlets available for this product. See publication 10.54.

Maximum Working Pressure

- 300 psi/2068 kPa/21 Bar

Application

- Provides a convenient method of incorporating outlets for directly connecting sprinklers, drop nipples, sprigs, gauges, drains and other outlet products

Pipe Material

- Carbon steel
- Contact Victaulic for use on additional pipe types and wall thicknesses

2.0 CERTIFICATION/LISTINGS

LPS 1186: Issue 3.1
Cert/LPCB Ref. 491a/27

NOTES

- See Section 7.2 REFERENCE MATERIALS for additional certification information.

ALWAYS REFER TO ANY NOTIFICATIONS AT THE END OF THIS DOCUMENT REGARDING PRODUCT INSTALLATION, MAINTENANCE OR SUPPORT.

© 2021 Victaulic Company. All rights reserved.

Permit: 2021-2063821-CT
RSN: 1584536
Sheet 11 of 20

3.0 SPECIFICATIONS - MATERIAL

Housing: Ductile iron conforming to ASTM A536, Grade 65-45-12. Ductile iron conforming to ASTM A395, Grade 65-45-15, is available upon special request.

Housing Coating: (specify choice)

☐ Orange enamel (North America, Latin America, Asia Pacific).

☐ Red enamel (Europe).

☐ Optional: Contact Victaulic with your requirements for other coatings.

Gasket[1]:

☐ **Grade "E" EPDM (Type A)**

EPDM (Violet color code) Applicable for wet and dry (oil-free air) sprinkler services only. Listed/Approved for continuous use in wet and dry systems. Listed/Approved for dry systems at -40˚F/-40˚C and above. NOT COMPATIBLE FOR USE WITH HOT WATER SERVICES OR STEAM SERVICES.

[1] Services listed are General Service Guidelines only. It should be noted that there are services for which these gaskets are not compatible. Reference should always be made to the latest Victaulic Seal Selection Guide for specific gasket service guidelines and for a listing of services which are not compatible.

Bolts/Nuts:

☐ Standard: Carbon steel oval neck track bolts meeting the mechanical property requirements of ASTM A449 (imperial) and ISO 898-1 Class 9.8 (metric). Carbon steel hex flange nuts meeting the mechanical property requirements of ASTM A563 Grade B (imperial – hex nuts) and ASTM A563M Class 9 (metric – hex nuts). Track bolts and hex flange nuts are zinc electroplated per ASTM B633 Fe/Zn 5, finish Type III (imperial) or Type II (metric).

 © 2021 Victaulic Company. All rights reserved.

Permit: 2021-2063821-CT
RSN: 1584536

4.0 DIMENSIONS

Style 922

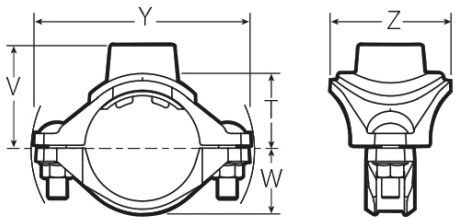

Style 922

Size						Bolt/Nut		Dimensions					Weight
Nominal Run x Branch FPT[2] inches DN			Actual Outside Diameter inches mm			Qty.	Size inches mm	T[3] inches mm	V inches mm	W inches mm	Y inches mm	Z inches mm	Approximate (Each) lb kg
1 ¼ DN32	x	½ DN15	1.660 42.4	x	0.840 21.3	2	⅜ x 1 ⅜	1.30 33	1.83 47	1.10 28	3.87 98	2.56 65	1 0.5
		¾ DN20			1.050 26.9	2	⅜ x 1 ⅜	1.28 33	1.83 47	1.10 28	3.87 98	2.56 65	1 0.5
		1 DN25			1.315 33.7	2	⅜ x 1 ⅜	1.52 39	2.18 55	1.10 28	3.87 98	2.56 65	1 0.5
1 ½ 40	x	½ DN15	1.900 48.3	x	0.840 21.3	2	⅜ x 1 ⅜	1.42 36	1.95 50	1.22 31	4.08 104	2.56 65	1 0.5
		¾ DN20			1.050 26.9	2	⅜ x 1 ⅜	1.40 36	1.95 50	1.22 31	4.08 104	2.56 65	1 0.5
		1 DN25			1.315 33.7	2	⅜ x 1 ⅜	1.64 42	2.30 58	1.22 31	4.08 104	2.56 65	1 0.6
2 50	x	½ DN15	2.375 60.3	x	0.840 21.3	2	⅜ x 1 ⅜	1.66 42	2.19 56	1.46 37	4.60 117	2.56 65	1 0.6
		¾ DN20			1.050 26.9	2	⅜ x 1 ⅜	1.64 42	2.19 56	1.46 37	4.60 117	2.56 65	1 0.6
		1 DN25			1.315 33.7	2	⅜ x 1 ⅜	1.88 48	2.54 65	1.46 37	4.60 117	2.56 65	2 0.7
2 ½	x	½ DN15	2.875 73.0	x	0.840 21.3	2	⅜ x 1 ⅜	1.91 49	2.44 62	1.71 43	5.40 137	2.56 65	2 0.7
		¾ DN20			1.050 26.9	2	⅜ x 1 ⅜	1.89 48	2.44 62	1.71 43	5.40 137	2.56 65	2 0.7
		1 DN25			1.315 33.7	2	⅜ x 1 ⅜	2.13 54	2.79 71	1.71 43	5.40 137	2.56 65	2 0.7
DN65	x	½ DN15	3.000 76.1	x	0.840 21.3	2	⅜ x 1 ⅜	1.91 49	2.44 62	1.71 43	5.50 140	2.56 65	2 0.7
		¾ DN20			1.050 26.9	2	⅜ x 1 ⅜	1.89 48	2.44 62	1.71 43	5.50 140	2.56 65	2 0.7
		1 DN25			1.315 33.7	2	⅜ x 1 ⅜	2.13 54	2.79 71	1.71 43	5.50 140	2.56 65	2 0.8

[2] Victaulic female threaded products are designed to accommodate standard NPT or BSPT (optional) male pipe threads only. Refer to the specific literature for these types of special male-threaded products for guidance and possible limitations for use. Failure to verify suitability in advance may result in assembly problems or leakage.

[3] Center of run to engaged pipe end for NPT threads (dimensions are approximate).

 © 2021 Victaulic Company. All rights reserved.

Permit: 2021-2063821-CT
RSN: 1584536
Sheet 13 of 20

5.0 PERFORMANCE

Style 922

Run Size x Outlet Size inches DN			Equivalent Length of 1 inch Schedule 40 Steel Pipe (per UL 213, Section 16) (C=120)[4]	
			Threaded feet meters	Grooved[5] feet meters
1 ¼ DN32	x	1 DN25	8.5 2.6	12.5 3.8
1 ½ DN40	x	1 DN25	8.5 2.6	12.5 3.8
2 DN50	x	1 DN25	8.5 2.6	12.5 3.8
2 ½	x	1 DN25	8.5 2.6	12.5 3.8
DN65	x	1 DN25	8.5 2.6	12.5 3.8

[4] Hazen-Williams coefficient of friction is 120.
[5] 1" FireLock™ Innovative Groove System (IGS) outlet

6.0 NOTIFICATIONS

WARNING



- **Read and understand all instructions before attempting to install, remove, adjust, or maintain any Victaulic piping products.**
- **Depressurize and drain the piping system before attempting to install, remove, adjust, or maintain any Victaulic piping products.**
- **Wear safety glasses, hardhat, and foot protection.**

Failure to follow these instructions could result in death or serious personal injury and property damage.

7.0 REFERENCE MATERIALS

	Dimensions	
	Minimum Hole Diameter/ Hole Saw Size inches mm	Maximum Hole Diameter/ Hole Saw Size inches mm
All Outlet Sizes	1 3/16	1 ¼
	30	32

 © 2021 Victaulic Company. All rights reserved.

Permit: 2021-2063821-CT
RSN: 1584536
Sheet 14 of 20

7.1 REFERENCE MATERIALS

Size	Services Pressures per Regulatory Approvals and Listings[6]					
Nominal inches DN	**UL** psi kPa	**ULC** psi kPa	**FM** psi kPa	**VdS** psi kPa	**LPCB** psi kPa	**CNBOP** psi kPa
1 ¼ x ½ DN32 X DN15	300 2068	300 2068	300 2068	232 1600	232 1600	232 1600
1 ¼ x ¾ DN32 X DN20	300 2068	300 2068	300 2068	232 1600	232 1600	232 1600
1 ¼ x 1 DN32 X DN25	300 2068	300 2068	300 2068	232 1600	232 1600	232 1600
1 ½ x ½ DN40 X DN15	300 2068	300 2068	300 2068	232 1600	232 1600	232 1600
1 ½ x ¾ DN40 X DN20	300 2068	300 2068	300 2068	232 1600	232 1600	232 1600
1 ½ x 1 DN40 X DN25	300 2068	300 2068	300 2068	232 1600	232 1600	232 1600
2 x ½ DN50 X DN15	300 2068	300 2068	300 2068	232 1600	232 1600	232 1600
2 x ¾ DN50 X 20	300 2068	300 2068	300 2068	232 1600	232 1600	232 1600
2 x 1 DN50 X DN25	300 2068	300 2068	300 2068	232 1600	232 1600	232 1600
2 ½ x ½	300 2068	300 2068	300 2068	232 1600	232 1600	232 1600
2 ½ x ¾	300 2068	300 2068	300 2068	232 1600	232 1600	232 1600
2 ½ x 1	300 2068	300 2068	300 2068	232 1600	232 1600	232 1600
DN65 X DN15	–	–	300 2068	232 1600	232 1600	232 1600
DN65 X DN20	–	–	300 2068	232 1600	232 1600	232 1600
DN65 X DN25	–	–	300 2068	232 1600	232 1600	232 1600

[6] Pressures listed in this chart are based upon standard wall pipe. Approved and Listed pressures may vary by pipe schedule.

NOTE

- Consult regulatory agency websites for details and the most recent regulatory information.

7.2 REFERENCE MATERIALS

05.01: Victaulic Seal Selection Guide

29.01: Victaulic Terms and Conditions of Sale

I-100: Installation Instructions

I-922: Installation Instructions FireLock™ Outlet-T

User Responsibility for Product Selection and Suitability
Each user bears final responsibility for making a determination as to the suitability of Victaulic products for a particular end-use application, in accordance with industry standards and project specifications, and the applicable building codes and related regulations as well as Victaulic performance, maintenance, safety, and warning instructions. Nothing in this or any other document, nor any verbal recommendation, advice, or opinion from any Victaulic employee, shall be deemed to alter, vary, supersede, or waive any provision of Victaulic Company's standard conditions of sale, installation guide, or this disclaimer.

Intellectual Property Rights
No statement contained herein concerning a possible or suggested use of any material, product, service, or design is intended, or should be constructed, to grant any license under any patent or other intellectual property right of Victaulic or any of its subsidiaries or affiliates covering such use or design, or as a recommendation for the use of such material, product, service, or design in the infringement of any patent or other intellectual property right. The terms "Patented" or "Patent Pending" refer to design or utility patents or patent applications for articles and/or methods of use in the United States and/or other countries.

Note
This product shall be manufactured by Victaulic or to Victaulic specifications. All products to be installed in accordance with current Victaulic installation/assembly instructions. Victaulic reserves the right to change product specifications, designs and standard equipment without notice and without incurring obligations.

Installation
Reference should always be made to the Victaulic installation handbook or installation instructions of the product you are installing. Handbooks are included with each shipment of Victaulic products, providing complete installation and assembly data, and are available in PDF format on WeChat.

Warranty
Refer to the Warranty section of the current Price List or contact Victaulic for details.

Trademarks
Victaulic and all other Victaulic marks are the trademarks or registered trademarks of Victaulic Company, and/or its affiliated entities, in the U.S. and/or other countries.

 © 2021 Victaulic Company. All rights reserved.

BAND HANGERS

www.phd-mfg.com

NFPA SWIVEL RING HANGER — FIG. 141 & 141F

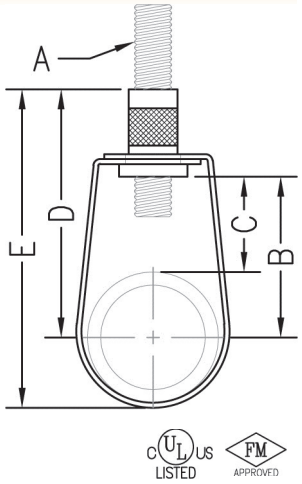

Function: Designed for the suspension of non-insulated stationary pipe lines. The knurled insert nut that allows a vertical adjustment after installation, is tapped to NFPA reduced rod size standards. Captured knurled insert nut present on pipe sizes ½" (15mm) to 2" (50mm). The capture is permanent in the bottom portion of the band, allowing the hanger to be opened during installation if desired, but preventing the knurled insert nut from falling completely out. Fig. 141F has a layer of felt which separates the pipe from the hanger to reduce vibration and sound.

Material: Carbon steel

Finish: Pre-galvanized **(Fig. 141)** or pre-galvanized with felt lining **(Fig. 141F)**

Approvals: Underwriters' Laboratories Listed in the U.S. (UL), Canada (CUL), for use with standard steel pipe sizes ¾" (20mm) to 8" (200mm) and CPVC pipe size ¾" (20mm) to 4" (100mm). Factory Mutual Approved for steel pipe sizes ¾" (20mm) to 8" (200mm). Complies with Federal Specifications A-A-1192A (Type 10), and Manufacturers' Standardization Society ANSI/MSS SP-58 (Type 10) which supersedes ANSI/MSS SP-69.

Ordering: Specify figure number and pipe size.

NOTE: If ordering Fig. 141F felt lined hangers for pipe sizes of 3½"(90mm) or under, order the next largest size to allow for the thickness of the felt lining. Metric knurl insert nuts available upon request.

Pipe Size		Rod Size	B		Adj. C		D		E		Max. Rec. Load		Wt. Each	
											lbs.	kN	lbs.	kg
½	(15)	3/8	1 7/8	(47.63)	1 7/16	(36.51)	2 3/4	(69.85)	3 1/16	(77.79)	300	(1.33)	.10	(.05)
¾	(20)	3/8	1 11/16	(42.86)	1 1/8	(28.58)	2 1/2	(63.50)	3 1/16	(77.79)	300	(1.33)	.10	(.05)
1	(25)	3/8	1 5/8	(41.28)	1	(25.40)	2 1/2	(63.50)	3 3/16	(80.96)	300	(1.33)	.10	(.05)
1¼	(32)	3/8	1 15/16	(49.21)	1 1/16	(26.99)	2 13/16	(71.44)	3 9/16	(90.49)	300	(1.33)	.11	(.05)
1½	(40)	3/8	2 1/8	(53.98)	1 1/16	(26.99)	3 1/8	(79.38)	3 7/8	(98.43)	300	(1.33)	.11	(.05)
2	(50)	3/8	2 7/16	(61.91)	1 1/8	(28.58)	3 5/16	(84.14)	4 3/8	(111.13)	300	(1.33)	.14	(.06)
2½	(65)	3/8	3 1/16	(77.79)	1 5/8	(41.28)	3 15/16	(100.01)	5 3/8	(136.53)	525	(2.34)	.19	(.09)
3	(80)	3/8	3 11/16	(93.66)	1 7/8	(47.63)	4 9/16	(115.89)	6 5/16	(160.34)	525	(2.34)	.23	(.10)
3½	(90)	3/8	3 3/4	(95.25)	1 7/8	(47.63)	4 5/8	(117.48)	6 5/8	(168.28)	525	(2.34)	.25	(.11)
4	(100)	3/8	4 3/16	(106.36)	1 7/8	(47.63)	5 1/16	(128.59)	7 5/16	(185.74)	650	(2.89)	.30	(.14)
5	(125)	1/2	4 5/8	(117.48)	1 5/8	(41.28)	5 5/8	(142.88)	8 3/8	(212.73)	1000	(4.45)	.50	(.23)
6	(150)	1/2	5 5/8	(142.88)	2 1/4	(57.15)	6 1/2	(165.10)	9 13/16	(249.24)	1000	(4.45)	.58	(.26)
8	(200)	1/2	6 13/16	(173.04)	2 7/16	(61.91)	7 15/16	(201.61)	12 1/4	(311.15)	1000	(4.45)	.90	(.41)

Unless otherwise specified, all dimensions on drawings and in charts are in inches and dimensions shown in parentheses are in millimeters.

www.phd-mfg.com

THREADED ACCESSORIES

FIG. 20 & 21 CONTINUOUS THREADED ROD

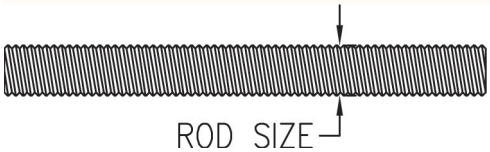

Function: Useful in applications where stud lengths cannot be predetermined.
Material: Carbon steel (Type 304 or 316 Stainless Steel upon request)
Finish: Plain **(Fig. 20)** or electro-galvanized Finish **(Fig. 21)** (Hot dipped galvanized upon request)
Ordering: Specify figure number, rod size, length, material, and finish.

Rod Size	Packaging Feet Per Bundle						Max. Rec. Load				Wt. Per Foot	
							650°F (343°C)		750°F (399°C)			
	6ft.	(1.83)	10ft.	(3.05)	12ft.	(3.66)	lbs.	kN	lbs.	kN	lbs.	kg
1/4-20	300	(91.44)	500	(152.4)	600	(182.88)	240	(1.07)	188	(0.84)	.12	(.05)
3/8-16	150	(45.72)	250	(76.2)	240	(73.15)	730	(3.25)	572	(2.54)	.29	(.13)
1/2-13	72	(21.95)	120	(36.58)	144	(43.90)	1350	(6.01)	1057	(4.70)	.54	(.25)
5/8-11	48	(14.63)	80	(24.38)	96	(29.26)	2160	(9.61)	1692	(7.52)	.83	(.38)
3/4-10	30	(9.14)	50	(15.24)	60	(18.29)	3230	(14.37)	2530	(11.25)	1.25	(.57)
7/8-9	24	(7.32)	40	(12.19)	48	(14.63)	4480	(19.93)	3508	(15.61)	1.65	(.75)
1-8	12	(3.66)	20	(6.10)	24	(7.32)	5900	(26.24)	4620	(20.55)	2.25	(1.02)

The following pages are an excerpt from the North American Product Technical Guide, Volume 1: Direct Fastening Technical Guide, Edition 18.

Please refer to the publication in its entirety for complete details on this product including data development, base materials, general suitability, installation, corrosion, and product specifications.

http://submittals.us.hilti.com/PTGVol1/

To consult directly with a team member regarding our direct fastening products, contact Hilti's team of technical support specialists between the hours of 7:00am - 6:00pm CST.

US: 877-749-6337 or HNATechnicalServices@hilti.com
CA: 1-800-363-4458 ext. 6 or CATechnicalServices@hilti.com

Hilti, Inc.
7250 Dallas Parkway, Suite 1000
Plano, TX 75024

1-800-879-8000
www.hilti.com

Permit: 2021-2063821-CT
RSN: 1584536
Sheet 18 of 20

3.2.11 STUD FASTENERS FOR ATTACHMENT TO CONCRETE

3.2.11.1 PRODUCT DESCRIPTION

The Hilti threaded stud program is for use with Hilti powder-actuated tools to provide a fast and reliable solution for making attachments to concrete base materials. Threaded studs are available in standard carbon steel. The X-W6 and W10 threaded studs have varying shank lengths to provide reliable fastenings to standard and high strength concrete. Thread diameters of 1/4" have thread lengths ranging from 1/2" through 1-1/2". The 3/8" thread diameter has a single thread length of 1-3/16".

3.2.11.1 Product description
3.2.11.2 Material specifications
3.2.11.3 Technical data
3.2.11.4 Installation instructions
3.2.11.5 Ordering information



X-W6 W10

3.2.11.2 Material specifications

Fastener designation	Fastener material	Fastener plating
X-W6	Carbon Steel	5 µm Zinc[1]
W10	Carbon Steel	5 µm Zinc[1]

1 ASTM B633, SC1, Type III. Refer to Section 2.3.3.1 for more information.

3.2.11.3 Technical data

Fastener designation	Thread designation	Thread length in. (mm)	Shank length in. (mm)
X-W6-20-22	UNC 1/4-inch	**3/4** (20)	**7/8** (22)
X-W6-20-27	UNC 1/4-inch	**3/4** (20)	**1** (27)
X-W6-38-27	UNC 1/4-inch	**1-1/2** (38)	**1** (27)
W10-30-27	UNC 3/8-inch	**1-3/16** (30)	**1** (27)
W10-30-32	UNC 3/8-inch	**1-3/16** (30)	**1-1/4** (32)
W10-30-42	UNC 3/8-inch	**1-3/16** (30)	**1-5/8** (42)

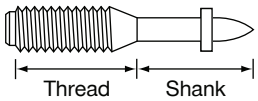

Listings/Approvals

ICC-ES (International Code Council)
ESR-1663

COLA (City of Los Angeles)
RR 25646

FM (Factory Mutual)
W10-30-27P10, W10-30-32P10 and W10-30-42P10 Fasteners for Sprinkler Pipe Hangers

UL (Underwriters Laboratories)
W10-30-32P10 and W10-30-42P10, Fasteners for Sprinkler Pipe Hangers - Up to 2-1/2" diameter pipe

Allowable loads in normal weight concrete[1,2]

Description	Fastener	Shank diameter in. (mm)	Minimum embedment in. (mm)	Concrete compressive strength			
				2000 psi		4000 psi	
				Tension lb (kN)	Shear lb (kN)	Tension lb (kN)	Shear lb (kN)
1/4–20 Threaded stud	X-W6	**0.145** (3.7)	**3/4** (19)	**40** (0.18)	**55** (0.24)	**40** (0.18)	**55** (0.24)
			1 (25)	**85** (0.38)	**195** (0.87)	**110** (0.49)	**225** (1.00)
3/8–16 Threaded stud	W10	**0.205** (5.2)	**1** (25)	**85** (0.38)	**95** (0.42)	**100** (0.44)	**105** (0.47)
			1-1/4 (32)	**175** (0.78)	**345** (1.53)	**200** (0.89)	**380** (1.69)
			1-5/8 (41)	**285** (1.27)	**380** (1.69)	**385** (1.71)	**395** (1.76)

1 The tabulated allowable load values are for the low-velocity fasteners only, using a safety factor that is greater than or equal to 5.0, calculated in accordance with ICC-ES AC70. Wood or steel members connected to the substrate must be investigated in accordance with accepted design criteria.

2 Multiple fasteners are recommended for any attachment.

Allowable Loads in Minimum f'_c = 3000 psi Structural Lightweight Concrete[1,4]

Fastener description	Fastener	Shank dia. in. (mm)	Min. embed. in. (mm)	Fastener location				
				Installed into concrete		Installed through 3" deep metal deck into concrete[2,3]		
				Tension lb (kN)	Shear lb (kN)	Tension lb (kN)		Shear lb (kN)
						Upper flute	Lower flute	
1/4–20 Threaded Stud	X-W6	**0.145** (3.7)	**3/4** (20)	**125** (0.56)	**185** (0.82)	**125** (0.56)	**115** (0.54)	**185** (0.82)
			1 (25)	**175** (0.78)	**185** (0.82)	**160** (0.71)	**180** (0.80)	**185** (0.82)
3/8–16 Threaded Stud	W10	**0.205** (5.2)	**1** (25)	**265** (1.18)	**190** (0.85)	**160** (0.71)	–	**185** (0.82)
			1-1/4 (32)	**280** (1.25)	**380** (1.69)	**160** (0.71)	**210** (0.93)	**470** (2.09)
			1-5/8 (41)	**445** (1.98)	**540** (2.40)	**435** (1.93)	**325** (1.45)	**675** (3.00)

1 The tabulated allowable load values are for the low-velocity fasteners only, using a safety factor that is greater than or equal to 5.0, calculated in accordance with ICC-ES AC70. Wood or steel members connected to the substrate must be investigated in accordance with accepted design criteria.

2 The steel deck profile is 3" deep composite floor deck with a thickness of 20 gauge (0.0358"). Figure 1 (Section 3.2.1.6) shows the nominal flute dimensions, fastener locations and load orientations for the deck profile.

3 Structural lightweight concrete fill above top of metal deck shall be a minimum of 3-1/4" deep.

4 Multiple fasteners are recommended for any attachment.

Allowable Loads in Concrete Masonry Units[1,2,3,4,5,8]

Fastener description	Fastener	Shank diameter in. (mm)	Minimum embedment in. (mm)	Hollow CMU				Grout filled CMU			
				Face shell[6]		Mortar joint[6]		Face shell[6]		Mortar joint[6]	
				Tension lb (kN)	Shear lb (kN)	Tension lb (kN)	Shear[7] lb (kN)	Tension lb (kN)	Shear lb (kN)	Tension lb (kN)	Shear[7] lb (kN)
1/4-20 Threaded Stud	X-W6	**0.145** (3.7)	**1** (25)	**105** (0.47)	**175** (0.78)	**80** (0.36)	**110** (0.49)	**125** (0.56)	**175** (0.78)	**135** (0.60)	**150** (0.67)

1 The tabulated allowable load values are for the low-velocity fastener only, using a safety factor of 5.0 or higher. Wood or steel members connected to the substrate must be investigated in accordance with accepted design criteria.

2 The tabulated allowable load values are for low-velocity fasteners installed in normal weight or lightweight concrete masonry units conforming to ASTM C90.

3 The tabulated allowable load values are for low-velocity fasteners installed in concrete masonry units with mortar conforming to ASTM C270, Type N.

4 The tabulated allowable load values are for low-velocity fasteners installed in concrete masonry units with grout conforming to ASTM C476, as coarse grout.

5 The tabulated allowable load values are for one low-velocity fastener installed in an individual masonry unit cell and at least 4" from the edge of the wall.

6 Fastener can be located anywhere on the face shell or mortar joint as shown in the figure to the right.

7 Shear direction can be horizontal or vertical (Bed Joint or T-Joint) along the CMU wall plane.

8 Multiple fasteners are recommended for any attachment.

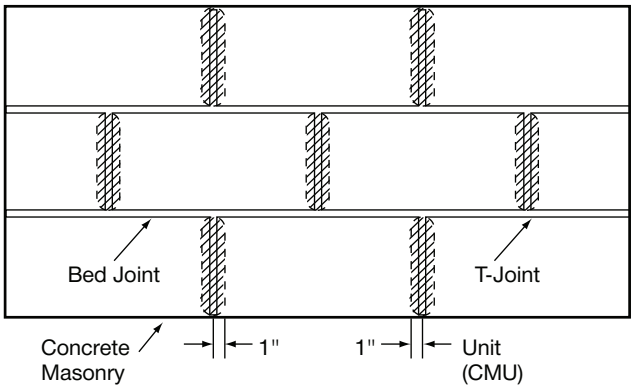

Acceptable locations (NON-SHADED AREAS) for threaded studs in CMU walls

Allowable bending moments for threaded stud fasteners installed in minimum 2,000 psi concrete[1,2]

Fastener designation	M_{rec} ft-lb (Nm)
X-W6	**3.6** (4.9)
W10	**10.0** (13.6)

1 Based on a safety factor greater than or equal to 2.0.

2 For more information on bending moments, reference Section 3.2.2.7.

3.2.11.4 INSTALLATION INSTRUCTIONS*

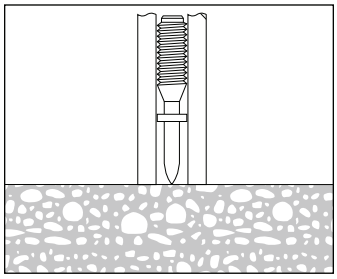

1. Press tip of fastener to concrete base material. Drive fastener with Hilti powder-actuated tool.

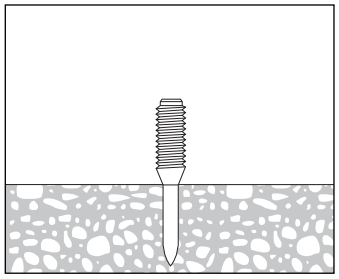

2. Ensure proper threaded stud embedment.

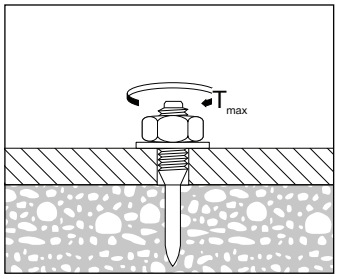

3. Make attachment. Do not exceed Maximum Tightening Torque, T_{max}.

* These are abbreviated instructions which may vary by application. **ALWAYS** review/follow the instructions accompanying the product.

Maximum tightening torque, T_{max}, for threaded studs driven into concrete, ft-lb (Nm)

Stud type	
X-W6	W10
3.0 (4.0)	**4.5** (6.0)

3.2.11.5 ORDERING INFORMATION

Fastener description	Shank length in. (mm)	Shank Ø in. (mm)	Thread length in. (mm)	Thread Ø	Guidance washer Ø	Packaging quantity
X-W6-20-22 FP8	**7/8** (22)	**0.145** (3.7)	**3/4** (20)	UNC 1/4-inch	8 mm plastic	100 pcs
X-W6-20-27 FP8	**1** (27)	**0.145** (3.7)	**3/4** (20)	UNC 1/4-inch	8 mm plastic	100 pcs
X-W6-38-27 FP8	**1** (27)	**0.145** (3.7)	**1-1/2** (38)	UNC 1/4-inch	8 mm plastic	100 pcs
W10-30-27 P10	**1** (27)	**0.205** (5.2)	**1-3/16** (30)	UNC 3/8-inch	10 mm plastic	100 pcs
W10-30-32 P10	**1-1/4** (32)	**0.205** (5.2)	**1-3/16** (30)	UNC 3/8-inch	10 mm plastic	100 pcs
W10-30-42 P10	**1-5/8** (42)	**0.205** (5.2)	**1-3/16** (30)	UNC 3/8-inch	10 mm plastic	100 pcs





X-W6



W10*

* W10 threaded stud installation requires a 10mm fastener base plate.