City of Aurora Public Works Department

SIGN PERMIT APPLICATION

Building Division • 15151 E. Alameda Parkway, Ste 2400 • Aurora, CO 80012 • 303-739-7420 • Fax: 303-739-7412
Email completed application to: permitcounter@auroragov.org

Project Address 1400 S. POTOMAC STREET		**Unit #**
Project Name/Subdivision MEDICAL CENTER OF AURORA		
Contractor YESCO LLC	**Phone** 720-458-7104	**Fax** 303-375-9111
Contact Person Chuck Boncordo	**Phone** 720-458-7104	**Fax** 303-375-9111
Email cboncordo@yesco.com		
Valuation (FDA) $ 19,924	**Materials Cost** $ 12,698	
Describe the work you will be doing REPLACE EXISTING JOINT ID SIGN WITH NEW FREESTANDING MONUMENT SIGN CONTAINING ONLY AN ADDRESS. FINAL ELECTRICAL CONNECTION TO EXISTING CIRCUIT BY YESCO LLC.		

Building Frontage in LF: 255 Number of existing signs: 1 TO BE REMOVED List the quantity of existing sign sf: 0

Illuminated? ☑ Yes ☐ No Electrician (required for all illuminated signs): YESCO #6604

Monument sign? ☑ Yes ☐ No Is height from grade more than 6': ☑ Yes ☐ No Any existing waivers? ☐ Yes ☐ No

I declare under penalty that this application has been examined by me; and that the statements made herein are made in good faith pursuant to the City of Aurora tax and licensing regulations; and to the best of my knowledge and belief, are true, correct and complete. Note: If submitted electronically typing in name constitutes agreement to the above statement.

Name	Signature	Date
Chuck Boncordo	Chuck Boncordo	

Note: If submitted electronically typing in name constitutes agreement to the above statement.

THIS SPACE FOR OFFICE USE ONLY

Fee Determination Assessment: $ _____

REVIEWS
- ☐ Sign
- ☑ Structural
- ☐ Electrical

INSPECTIONS
- ☑ Structural
- ☐ Electrical

Balance Due: $ _____

Plans Picked Up By: _____

Company Name: _____

Phone Number _____

Intake Date: _____ RSN: 935948

2014-885312 LT

#14-885312

935948

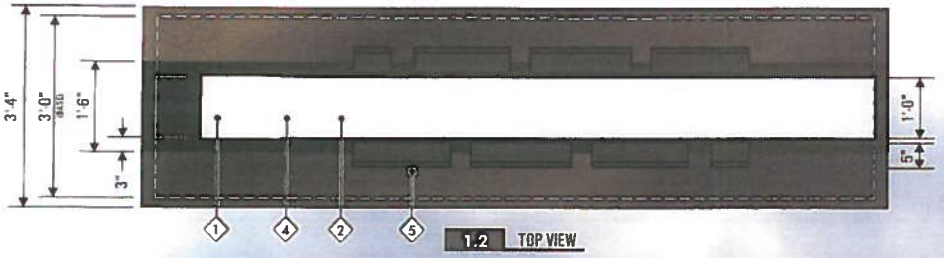

1.2 TOP VIEW

COLOR KEY		
1	PAINT	FAUX DARK WOOD TO MATCH EXISTING
2	PAINT	SHERWIN WILLIAMS TO MATCH BENJAMIN MOORE AF-5 FROSTINE
3	PAINT	SHERWIN WILLIAMS TO MATCH BENJAMIN MOORE 2130-10 BLACK BEAN SOUP
4	PAINT	SHERWIN WILLIAMS EZ1100
5	PAINT	PRE-PAINTED BRONZE
6	VINYL	3M PERFORATED BLACK

NOTE: UNLESS OTHERWISE NOTED, THE COLORS DEPICTED ON THIS RENDERING MAY NOT MATCH ACTUAL COLORS OR FINISHED DISPLAY. PLEASE REFER TO COLOR CALLOUTS AND THEIR APPROPRIATE VENDOR SPECIFIED SAMPLES FOR APPROVED COLOR SPECIFICATIONS

SCOPE OF WORK:
REMOVE & JUNK EXISTING SIGN CABINET. ALL NEW STEEL & FOOTING.
MANUFACTURE & INSTALL NEW MONUMENT SIGN.
-NUMERALS TO BE DUAL ILLUMINATED.
-PRICE OPTION TO LAMP BEHIND FACE (CALLOUT 'D') TO ACCOMMODATE FUTURE TENANTS
-STONE BASE TO MATCH EXISTING MONUMENT

PERMITTING	SIGN1 AREA: 61.28 ft²
FINAL ELECTRICAL CONNECTION BY:	NOT INCLUDED

REMOVE & DISPOSE EXISTING SIGN

EXISTING SIGN TO BE REPLACED

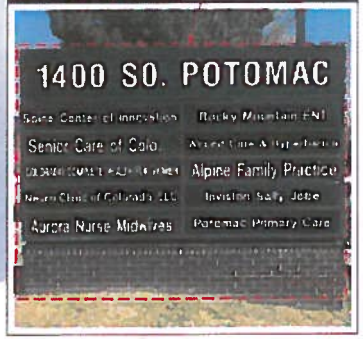

FABRICATION SPECIFICATIONS			
A	CABINET	MATERIAL	ALUMINUM
		LIGHTING	FLUORESCENT (H.O.)
		PAINT	SEE COLOR KEY
		FINISH	SEMI-GLOSS
B	DUAL-LIT PCL	LIGHTING	LED
		FACE ILLUM.	WHITE
		HALO ILLUM.	WHITE
	FACE	TYPE	ACRYLIC
		COLOR	WHITE
	VINYL ON FACE	LAYER	1st SURFACE
		COLOR	BLACK PERF
	RETAINER	TYPE	TRIM CAP
		SIZE	1"
		PAINT	SEE COLOR KEY
	RETURNS	DEPTH	5"
		PAINT	BRONZE
	BACKS	MATERIAL	POLYCARBONATE
		COLOR	CLEAR
	STAND-OFF	TYPE	SLEEVED ALL-THREAD
		SIZE	1"
		PAINT	PRE-PAINTED BRONZE
C	CAP	MATERIAL	ALUMINUM
		PAINT	SEE COLOR KEY
		FINISH	SEMI-GLOSS
D	FACE	TYPE	ALUMINUM
		THICKNESS	0.90"
		PAINT	SEE COLOR KEY
E	STONE BASE	TYPE	STONE (TO MATCH EXISTING) 8"x24" COLORADO SANDSTONE BLOCK

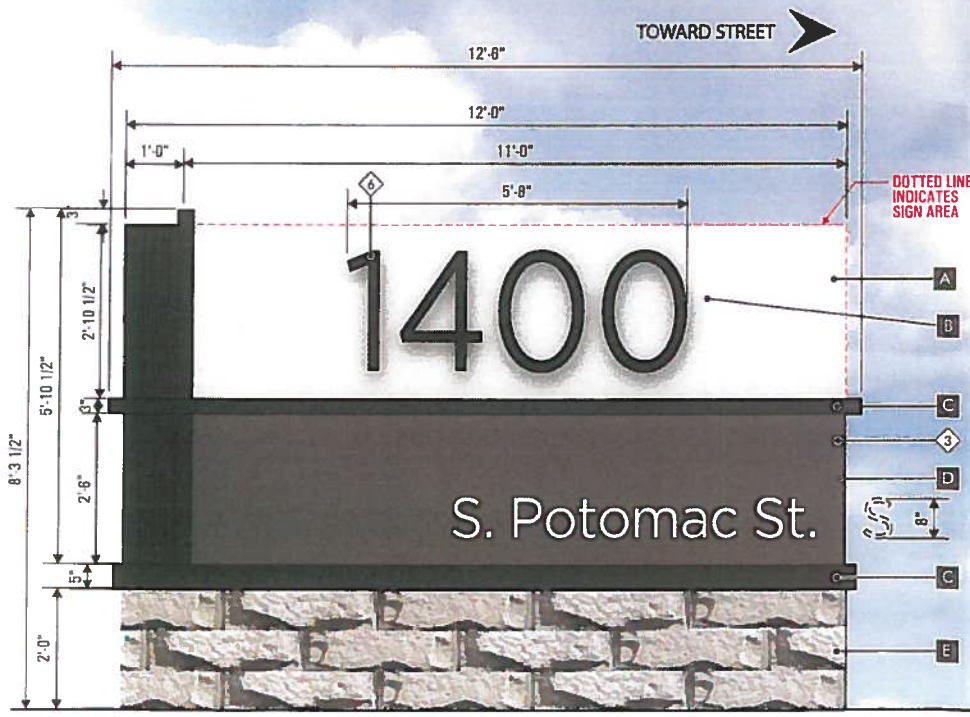

1 D/F MONUMENT SIGN SCALE: ½" = 1'-0"
QUANTITY: 1 MANUFACTURE & INSTALL

SIGN STYLE TO MATCH

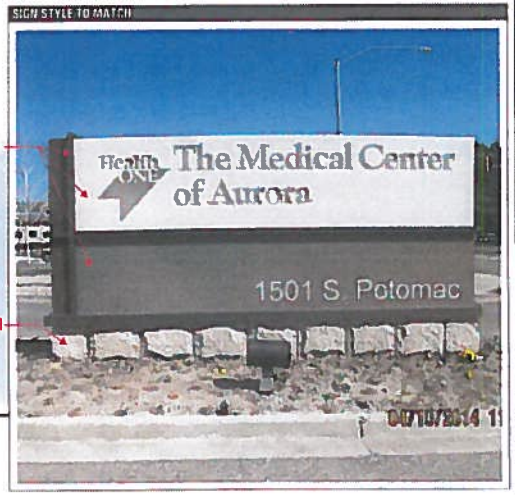

YESCO
Denver Region
Denver
2760 Inca St.
Denver, CO 80211
303.295.9377
Colorado Springs
5311 Lot Drive
Colorado Springs, CO 80915
719.359.0140
www.yesco.com

CLIENT: 1400 S POTOMAC
ADDRESS: 1400 S POTOMAC ST
CITY / STATE / ZIP: AURORA, CO
ACCOUNT REP: JIM MALM
DESIGNER: Buck Boyer
ORIGINAL DATE: 4.10.2014

Client Signature / Date
Landlord Signature / Date

VOLTS AMPS

703001 R2

PAGE 1 OF 1

#14-885312

935948

EAST BY SOUTHEAST FILING No. 3

A PLANNED BUILDING GROUP SUBMITTAL

EAST BY SOUTHEAST SUBDIVISION FILING NO 2 (M-1)

OWNER: EAST BY SOUTHEAST VENTURE C/O ALVIN STEMAN 50 SOUTH BEMISTON CLAYTON, MISSOURI 63105

OWNER GARY A. PASHEL & GENE F. REARDON SUITE 600 5251 SOUTH HAVANA STREET AURORA, COLORADO 80010

UNPLATTED (R-4)

E ARKANSAS AVE. (PUBLIC 60' ROW)

S POTOMAC STREET

INTERSTATE - 225

N

SCALE 1" = 50'

EXTENDICARE SUBDIVISION FILING NO 2 (R-4)

OWNER EXTENDICARE OF COLORADO, INC C/O EXTENDICARE HEALTH & CO PO BOX 3499 ABILENE, TEXAS 79604

N89°28'18"E 1 498.98'

Replacement sign to be placed 4' north of existing sign maintaining the same 21' setback from flow line.

BLD'G. 'E' FF = 98.5

PHASE 1 2 STORY

PHASE 3 1 STORY

BLD'G FF = ?

TRUE POINT OF BEGINNING

See 2004-6050-00

UNPLATTED (M-1)

OWNER EAST BY SOUTHEAST VENTURE C/O ALVIN STEMAN 50 S BEMISTON CLAYTON, MISSOURI 63105

SOUTH LINE, SE 1/4, SEC. 24

S1/4 CORNER, SECTION 24, T4S, R67W, 6th PM, FND NO 6 STEEL PIN

POINT OF BEGINNING: SE CORNER, SECTION 24, T4S, R67W, 6th PM, FND 3 1/2" BRASS CAPPED MONUMENT IN CDA RANGE BOX

EAST BY SOUTHEAST SUBDIVISION FILING No. 3

VICINITY MAP NO SCALE

SIGN DETAIL

PARKING SPACE DETAIL

ELEVATION OF TENANT IDENTIFICATION SIGNS

NOTE: W DENOTES HANDICAP PARKING SPACE; L DENOTES LOADING SPACE

ADM AMDT SEPT. 9, 1987 ADD BATTALION COMMUNICATIONS ANTENNA TO THE NINE TOP OF ROOF, MAX. HEIGHT 8' ABOVE TOP OF THE ADJ'C TALL

ADMIN AMDT. 12-5-94 REMOVE EXISTING JOINT ID SIGN, INSTALL NEW JOINT ID SIGN

ADMIN AMDT. 8-23-95 INSTALL NEW HANDICAPPED RAMP & CURB CUT.

ADMIN AMDT. 6-5-01 ADD NEW DOOR ON N. SIDE OF BLDG.

Sept. Mylar Change 5-16-01 North east corner of the building remove existing windows and replace with dual height windows.

ADM AMDT. 8-11-94 HANDICAP ACCESS RAMP

ADM AMDT: 7-19-82, 11-4-83, 4-25-84, 6-25-86, MAY 8-11-94, 12-5-94

EAST BY SOUTHEAST No. 3

BI-6056-1

9/11/2014
11:31 AM

Structural Engineering

1400 S. POTOMAC

1400 S. Potomac Street
Aurora, CO

8'-3 1/2" OAH Monument Sign

General Structural Notes:

Governing Building Code: **IBC 2009**

Dead:	15	psf
Live:	N/A	psf
Snow:	30	psf, flat roof
Wind:	Basic wind speed = 100	mph, 3 second gust
	Exposure= C, open terrain	
	Importance Factor = 0.87	
Seismic:	< Wind	

Index to Calculations:

Title	1
Material Notes	2
Column Design	3
Footing Design	4
Drawing	S-1

YESCO
Corporate Engineering
1605 South Gramercy Rd.
Salt Lake City, UT 84104
801-487-8481

COLORADO REGISTERED
BENJAMIN JONES
27864
PROFESSIONAL ENGINEER
9/15/14

STRUCTURAL PLAN REVIEW IS LIMITED TO A GENERAL SURVEY FOR CODE COMPLIANCE. NO REVIEW IS IMPLIED NOR WAS UNDERTAKEN TO VERIFY STRUCTURAL ADEQUACY.

CITY OF AURORA
BUILDING DIVISION
APPROVED AS NOTED C. MACY
DATED OCT 07 2014

Sign Engineering 4.0
(C) 2007 Young Electric Sign Company

#14-885312

#14-885312

CITY OF AURORA
BUILDING DIVISION
APPROVED AS NOTED C. MACY
DATED OCT 07 2014

STRUCTURAL PLAN REVIEW IS LIMITED TO A GENERAL SURVEY FOR CODE COMPLIANCE. NO REVIEW IS IMPLIED NOR WAS UNDERTAKEN TO VERIFY STRUCTURAL ADEQUACY.

GENERAL STRUCTURAL NOTES

DESIGN CRITERIA
1. BUILDING CODE: IBC 2009
2. DEAD LOAD: SIGN CABINETS = 15 PSF FRONT ELEVATION AREA
3. WIND LOAD: V = 100 MPH (3 SECOND GUST), EXPOSURE C (OPEN TERRAIN, SCATTERED OBSTRUCTIONS)
4. SNOW LOAD: 30 PSF (ROOF)

STRUCTURAL STEEL
5. DESIGN AND FABRICATION ACCORDING TO AISC-ASD, 14TH EDITION
6. PIPE: (HSS ROUND) ASTM A53 GRADE B, FY= 35 KSI
7. STEEL TUBE (HSS): ASTM A500 GRADE B, FY= 46 KSI

WELDING
8. DESIGN AND FABRICATION ACCORDING TO AWS D1.1, CURRENT EDITION.
9. E70XX ELECTRODES FOR SMAW PROCESS
10. 3/16" MIN FILLET WELD UNLESS OTHERWISE NOTED

FOUNDATION
11. CONCRETE COMPRESSIVE STRENGTH, f'c = 2500 PSI AT 28 DAYS MIN.
12. CONCRETE POURED AGAINST UNDISTURBED NATIVE SOILS
13. SOIL ALLOWABLE LATERAL BEARING CAPACITY = 100 PSF/FT
14. ALLOWABLE BEARING AT GRADE= 1500 PSF

OTHER NOTES
15. SEE ART DRAWINGS FOR SIGN FINISHES, COLORS, AND LIGHTING SPECIFICATIONS
16. PROVIDE DIELECTRIC PROTECTION BETWEEN DISSIMILAR METALS, TYP.

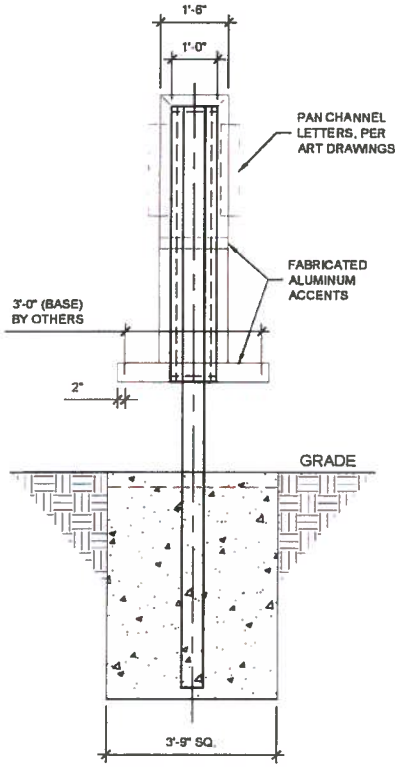

2 SIDE VIEW
SCALE: 3/8" = 1'-0"

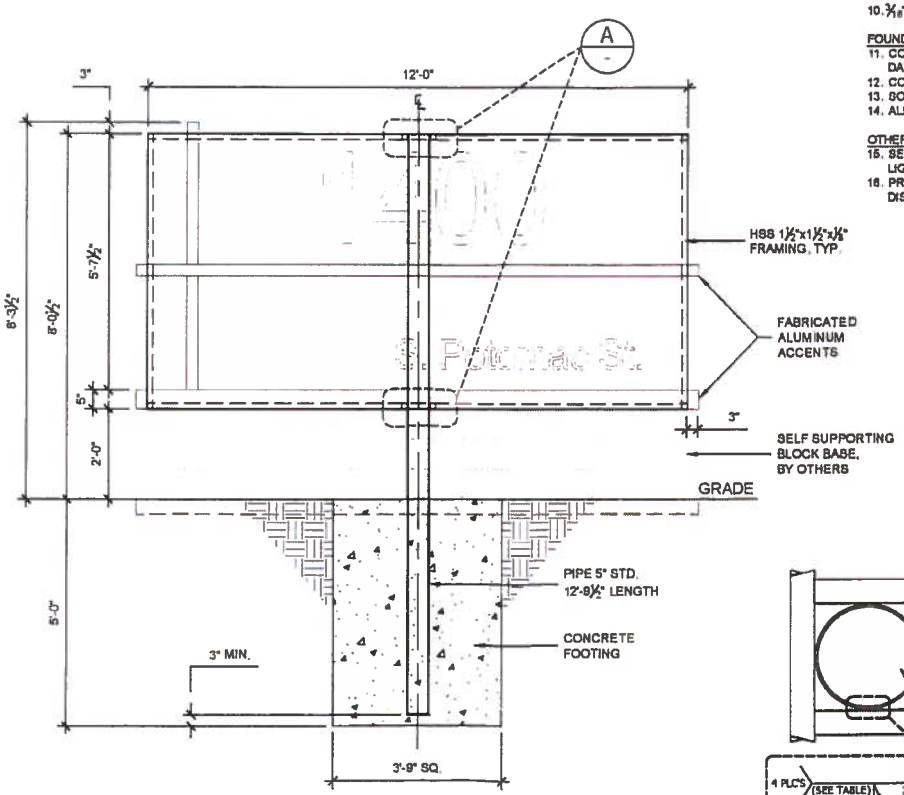

1 FRONT ELEVATION
SCALE: 3/8" = 1'-0"

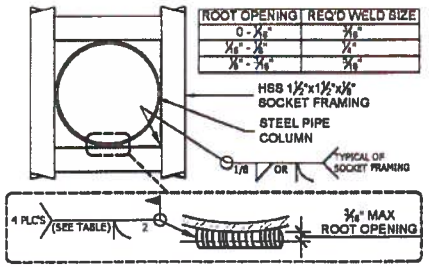

A TYP. POLE POCKET
SCALE: N.T.S.

YESCO
ENGINEERING
1605 South Gramercy Rd.
Salt Lake City, UT 84104
(801) 487-8481
www.yesco.com

© 2014 YESCO LLC, All rights reserved

Revisions

No.	Description
Sta	09/11/2014
1	
2	
3	
4	
5	

COLORADO REGISTERED BENJAMIN JONES 27864 PROFESSIONAL ENGINEER 9/13/14

Drawn by BARNEY W
Checked by BJ

1400 S. POTOMAC
AURORA, CO

Engineer Ben Jones
Account Exec. Jim Melm
Designer Buck Seymer

Date: 09/11/2014

Project No.
703001

S1.0

#14-885312

SIGN COLUMN DESIGN

Project: *1400 S. POTOMAC*

Descript: *8'-3 1/2" OAH Monument Sign*

Ref: *Steel Construction Manual, 13th Edition, ASD*

Areas Subject to Wind Forces — Basic Wind Speed: 100 | Exposure: C

Description	Height (s) (ft)	Width (B) (ft)	Area (sqft)	Centroid (ft)	Top (h) (ft)	Wind (psf)
1) sign cabinet	6.290	12.250	77.053	5.145	8.290	22.54
2) column	2.000	0.500	1.000	1.000	2.000	22.54

Calculation of Design Forces at Critical Heights

y (ft)	M (kip ft)	M (kip in)	V (kips)
@ grade	9.0	107.5	1.8
8.29			

Column Support Design Table — **NOTE: Use actual O.D. and t only**

Pipes - Fy = 35 ksi, Tubes - Fy=46 ksi

# of Cols	Column Type (P,TS)	Column Size	Length (ft)	Start Elev (ft)	End Elev (ft)	Sleeve Depth (in)	M req with P-Δ (kip ft)	M all (kip ft)
1	p	5.56x.26	13.54	-5.25	8.29	N/A	9.0	11.9

Sign Engineering 4.0
(C) 2007 Young Electric Sign Company

MATERIALS

Project: *1400 S. POTOMAC*
Descript: *8'-3 1/2" OAH Monument Sign*

Structural Steel

All shapes and plates: **ASTM A36**, except as noted otherwise
Rect. and Sq. hollow structural sections (HSS): **ASTM A500 GR B**, Fy=46 ksi)
Pipe: **ASTM A53 GR B**, Fy=35 ksi
Welding Electrodes: **E70XX** filler steel

Concrete

Compressive Strength: f'_c **= 2500 psi** at 28 days min.
Cement: **Type II**, portand standard

Soil

Type: **Sandy clay**, type 5
Allowable Foundation Pressure: **1500 psf** with increases
Lateral Bearing: **100 psf /ft** with increases

(C) 2007 Young Electric Sign Company

#14-885312

9/11/2014
11:31 AM

LATERAL BEARING PIER AND CAISSON FOOTINGS

Project: *1400 S. POTOMAC*
Descript: *8'-3 1/2" OAH Monument Sign*
Ref: *IBC 2009 Section 1807.3.2.1*

# Footings=	1		Moment/Footing, M=	9,047	lb-ft
Pass lat soil res, q=	100	psf	Shear/Footing, P=V=	1,759	lb
			Composite Centroid, h=	5.14	ft

Unconstrained Rectangular Pier

Width, W=	3.8	ft, parallel to sign face
Length, L=	3.8	ft, perpendicular to sign face
Depth, D= (A/2)(1+ SQR(1 + (4.36h)/A))=	5.0	ft
Actual Depth, D=	5	ft
S1= (2)(q)(D/3)=	333	psf
b= Sqrt(W^2 + L^2)=	5.3	ft
A= (2.34)(P) / (S1)(b)=	2.3	

Sign Engineering 4.0
(C) 2007 Young Electric Sign Company