THE MEDICAL CENTER OF AURORA

1501 S. POTOMAC ST.,
AURORA, CO 80012

City of Aurora Building Division
Project: *TMCA CATH LAB DEHIMIDIFICATION*
Address: *1501 S POTOMAC ST*
Occupancy Group: *I1.1*
Construction Type: *UBC IFR-SPK*
RSN: *1743619*
Permit: *2023 2378137-LT*

City of Aurora Building Division
Reviewed for Code Compliance
Approved as Noted: Kirk Nagle
Date: Sep 08, 2023
2021 INTERNATIONAL CODES & 2023 NEC

Code violations that are found during inspection are required to be corrected. Permit issuance does not grant approval of a code violation.

Field Inspection consultation is available upon request. Call 303-739-7420 to request a consultation

Structural plan review is limited to a general survey for code compliance. No review is implied nor was undertaken to verify structural adequacy.

TMAC CATH LAB HVAC DEHUMIDIFICATION

ISSUED FOR CONSTRUCTION SET
08/01/2023

MUST BE AVAILABLE ON SITE
FULL SIZE AND IN COLOR FOR
INSPECTIONS

CHANGES TO PLANS AFTER THE PERMIT IS ISSUED
WILL REQUIRE A REVISION SUBMITTED AND AN
APPROVED REVISION PLAN SET ONSITE FOR INSPECTIONS

During construction, maintain required exits, existing structural elements, fire protection devices and sanitary safeguards . 2021 IBC 3302.1

MAY BE REQUIRED BASED ON WORK

SEPARATE FIRE ALARM PERMIT REQUIRED:
Due to the proposed work the general contractor is required to obtain the services of a fire alarm contractor to determine if a separate alarm permit is required. If it is determined that the spacing of the fire alarm devices is not in compliance, then a separate fire alarm permit is required. Approval of the documents is required prior to system installation or any request for inspection. A certificate of occupancy or final approval cannot be issued by the Building Division without this fire protection system. 2015 IFC, Section 105.7.6.

SEPARATE FIRE SPRINKLER PERMIT REQUIRED:
Due to the proposed work the general contractor is required to obtain the services of a fire sprinkler contractor to determine if a separate sprinkler permit is required. If it is determined that the spacing of the fire sprinkler heads is not incompliance, then a separate fire sprinkler permit is required. Approval of the documents is required prior to system installation or any requires for inspection. A Certificate of Occupancy or final approval cannot be issued by the Building Division without this fire protection system. 2021 IFC, Section 105.6.1

302.2Penetrations of floor/ceiling assemblies and fire-resistance-rated assemblies. Penetrations of floor/ceiling assemblies and assemblies required to have a fire-resistance rating shall be protected in accordance with Chapter 7 of the International Building Code.

VICINITY MAP

TITLE SHEET INDEX

SHEET NUMBER	SHEET NAME
G-000	TITLE SHEET
M-001	MECHANICAL ABBREVIATIONS, SYMBOLS AND INDEX
M-002	MECHANICAL SPECIFICATIONS
M-100	30% GLYCOL / CHILLED WATER MECHANICAL P&ID
M-101	MECHANICAL AHU - CONTROL DIAGRAM AND SEQUENCE OF OPERATION
M-102	MECHANICAL PARTIAL FIRST FLOOR HVAC & PIPING PLAN
M-103	MECHANICAL PARTIAL SECOND FLOOR ROOF PLAN
M-104	MECHANICAL SECOND FLOOR PENTHOUSE PARTIAL PLAN
M-105	MECHANICAL EQUIPMENT SCHEDULES
M-106	PACKAGE PUMP HOUSE ENCLOSURE SPECIFICATIONS
M-107	MECHANICAL DETAILS
M-108	MECHANICAL DETAILS
MD-102	MECHANICAL PARTIAL FIRST FLOOR DEMOLITION PLAN
E-001	ELECTRICAL SYMBOLS, ABBREVIATIONS, & NOTES
E-002	ELECTRICAL SPECS & DEMO NOTES
E-003	ELECTRICAL ONE-LINE DIAGRAM
E-004	ELECTRICAL PANEL SCHEDULES
E-005	ELECTRICAL PARTIAL FIRST FLOOR POWER PLAN
E-006	ELECTRICAL PARTIAL SECOND FLOOR POWER PLAN
S-001	GENERAL STRUCTURAL NOTES
S-002	SPECIAL INSPECTIONS
S-003	PARTIAL SECOND FLOOR ROOF PLAN

Salas O'Brien
salasobrien.com
Dublin
2751 Tuller Pkwy
Dublin, OH 43017
Registration:

CONFIDENTIAL
THIS DRAWING AND ASSOCIATED DESIGN ELEMENTS ARE CONFIDENTIAL AND THE PROPERTY OF SALAS O'BRIEN, WHICH RETAINS ALL COMMON LAW, COPYRIGHT, STATUTORY AND OTHER RIGHTS THERETO. COPYRIGHT INFRINGEMENT OR MISAPPROPRIATION IS PROHIBITED, UNLESS OTHERWISE AGREED TO BY SALAS O'BRIEN, THIS DRAWING (AS WELL AS ANY COPIES) SHALL BE RETURNED TO SALAS O'BRIEN UPON REQUEST.

PROFESSIONAL SEAL

COLORADO LICENSED
MICHAEL P THOMPSON
50150
PROFESSIONAL ENGINEER
8/14/2023

ISSUE DATE	DESCRIPTION
08/01/2023	100% CD

2023-00034-00
HEALTHTRUST
FACILITIGROUP

TMCA CATH LAB HVAC DEHUMIDIFICATION

1501 S. POTOMAC ST,
AURORA, CO 80012

REVISIONS

Δ	DESCRIPTION	DATE
0	ISSUED FOR CONSTRUCTION	08/01/23

CHECKED BY Checker
DRAWN BY Author

SHEET NAME

TITLE SHEET

SHEET NUMBER G-000
REVISION 0

Autodesk Docs://080-2023-0034 TMCA Cathlab Dehumidification Upgrades/2023-00034 TMCA Cathlab-Mech_R22_R2.rvt
8/1/2023 11:40:26 AM

RSN 1743619 Permit #2023 2378137-LT

MECHANICAL ABBREVIATIONS

AAV	AUTOMATIC AIR VENT (VALVE)
AB	AIR BLENDER
AC	AIR CONDITIONING UNIT OR AIR COMPRESSOR
ACH	AIR CHANGES PER HOUR
AD	ACCESS DOOR
AF	AIR FILTER
AFC	AUTOMATIC FLOW CONTROL DEVICE
AFF	ABOVE FINISHED FLOOR
AHU	AIR HANDLING UNIT
ALUM	ALUMINUM
AMP	AMPERE
AMS	AIR FLOW MEASURING STATION
AP	ACCESS PANEL
APD	AIR PRESSURE DROP
ARCH	ARCHITECT/ARCHITECTURAL
AS	AIR SEPARATOR
AUTO	AUTOMATIC
AVG	AVERAGE
BAS	BUILDING AUTOMATION SYSTEM
BD	BALANCING DAMPER
BDD	BACK-DRAFT DAMPER
BHP	BRAKE HORSEPOWER
BOD	BOTTOM OF DUCT
BOP	BOTTOM OF PIPE
BTUH	BRITISH THERMAL UNIT PER HOUR
CAP	CAPACITY
CC	COOLING COIL
CCW	COUNTER CLOCKWISE
CD	CONDENSATE DRAIN
CF	CUBIC FEET
CFH	CUBIC FEET PER HOUR
CFM	CUBIC FEET PER MINUTE
CH	CHILLER
CL	CENTER LINE
CO	CLEAN OUT OR CARBON MONOXIDE
CONT	CONTINUOUS, CONTINUATION
CP	COIL PUMP
CT	COOLING TOWER
CU	CONDENSING/ER UNIT
CU FT	CUBIC FEET
CV	CONSTANT AIR VOLUME
CW	COLD WATER OR CLOCKWISE
D	DRAIN
DB	DECIBEL OR DRY BULB TEMPERATURE
DDC	DIRECT DIGITAL CONTROL
DE	DRYER EXHAUST
DER	DRYER EXHAUST RISER
DEG.F	DEGREE FARENHEIT
DG	DOOR GRILLE
DIA	DIAMETER
DIFF	DIFFUSER
DISCH	DISCHARGE
DN	DOWN
DP	DIFFERENTIAL PRESSURE
DWG	DRAWING
DX	DIRECT EXPANSION
(E)	EXISTING
E	EXHAUST
EA	EACH
EAT	ENTERING AIR TEMPERATURE
EBB	ELECTRIC BASEBOARD HEATER
EC	ELECTRICAL CONTRACTOR
ECH	ELECTRIC CABINET HEATER
EER	ENERGY EFFICIENCY RATIO
EF	EXHAUST FAN
EFF	EFFICIENCY
EG	ETHYLENE GLYCOL-WATER SOLUTION (% GLYCOL BY VOLUME)
EHC	ELECTRIC HEATING COIL
ELEC	ELECTRIC/ELECTRICAL
EL/ELEV	ELEVATION
ENT	ENTERING
EQUIP OR EQT	EQUIPMENT
E/RF	EXHAUST/RETURN FAN
ESP	EXTERNAL STATIC PRESSURE
ET	EXPANSION TANK
EUH	ELECTRIC UNIT HEATER
EWT	ENTERING WATER TEMPERATURE
EXH	EXHAUST
EXIST	EXISTING
F	FILTER
°F	DEGREE FARENHEIT
FA	FREE AREA
FD	FIRE DAMPER
FLA	FULL LOAD AMPERES
FLEX	FLEXIBLE
FOR	FUEL OIL RETURN
FOS	FUEL OIL SUPPLY
FOV	FUEL OIL VENT

FPB	FAN POWERED TERMINAL UNIT
FP	FIRE PROTECTION
FPM	FEET PER MINUTE
FPS	FEET PER SECOND
FS	FREEZE STAT
F/SD	COMBINATION FIRE/SMOKE DAMPER
FT	FEET OR FLASH TANK
FTR	FIN TUBE RADIATION (HOT WATER)
FV	FACE VELOCITY
GA	GAUGE
GAL	GALLON
GC	GENERAL CONTRACTOR
GD	GRAVITY DAMPER
GEN	GENERAL
GE	GENERAL EXHAUST
GER	GENERAL EXHAUST RISER
GPH	GALLONS PER HOUR
GPM	GALLONS PER MINUTE
H	HUMIDISTAT
HC	HEATING COIL
HORIZ	HORIZONTAL
HP	HORSEPOWER OR HEAT PUMP
HR	HOUR
HTG	HEATING
HUM	HUMIDIFIER
HVAC	HEATING, VENTILATION & AIR CONDITIONING
HX	HEAT EXCHANGER
HZ	HERTZ
ID	INSIDE DIAMETER
IN OR "	INCH
INSUL.	INSULATION
IN W.C.	INCHES WATER COLUMN
IN W.G.	INCHES WATER GAUGE
KE	KITCHEN EXHAUST
KER	KTICHEN EXHAUST RISER
KW	KILOWATT
KWH	KILOWATT HOUR
LAT	LEAVING AIR TEMPERATURE
LBS	POUNDS
LL	LOW LIMIT OR LANDLORD
LP	LOW PRESSURE GAS
LRA	LOCKED ROTOR AMPERES
LVG	LEAVING
LWT	LEAVING WATER TEMPERATURE
MAX	MAXIMUM
MB	MIXING BOX
MBH	THOUSAND BTU PER HOUR
MIN	MINIMUM OR MINUTE(S)
MD	MOTORIZED DAMPER
MP	MEDIUM PRESSURE GAS
NC	NORMALLY CLOSE OR NOISE CRITERIA
NIC	NOT IN CONTRACT
NK	NECK
NO	NORMALLY OPEN
NO OR #	NUMBER
NR	NOT REQUIRED
NTS	NOT TO SCALE
NV	NATURAL VENTILATION
OA	OUTSIDE AIR
OAI	OUTSIDE AIR INTAKE
OBD	OPPOSED BLADE DAMPER
OD	OUTSIDE DIAMETER
OPNG	OPENING
OV	OUTLET VELOCITY OR OVAL
P	PUMP
CTP	COOLING TOWER PUMP
CWP	CONDENSER WATER PUMP
PC	PLUMBING CONTRACTOR
PCD	PUMPED CONDENSATE DISCAHRGE
PG	PROPYLENE GLYCOL-WATER SOLUTION (%GLYCOL BY VOLUME)
PLBG	PLUMBING
PRESS	PRESSURE
PRV	PRESSURE REDUCING VALVE
PSIA	POUNDS PER SQUARE INCH ABSOLUTE
PSIG	POUNDS PER SQUARE INCH GAUGE
R	RETURN OR RISER
RA	RETURN AIR
REQ'D	REQUIRED
RH	RELATIVE HUMIDITY
RHC	REHEAT COIL
RO	RELIEF OPENING
RP	RADIANT PANEL
RPM	REVOLUTIONS PER MINUTE
RV	RELIEF VALVE (VENT) OR ROOF VENTILATOR
S	SUPPLY
SA	SOUND ATTENUATOR

SF	SUPPLY FAN OR SQUARE FEET
SHT	SHEET
SL	SENSIBLE LOAD
SP	STATIC PRESSURE
SPECS	SPECIFICATIONS
SQ	SQUARE
SQ.FT.	SQUARE FEET
SS	STAINLESS STEEL
STD	STANDARD
STRUC	STRUCTURE/STRUCTURAL
T	THERMOSTAT/TEMPERATURE SENSOR
TD	TEMPERATURE DIFFERENCE OR TRANSFER DUCT
TEF	TOILET EXHAUST FAN
TER	TOILET EXHAUST RISER
TEMP	TEMPERATURE
TO	TRANSFER OPENING
TSP	TOTAL STATIC PRESSURE
TYP	TYPICAL
UC	UNDER-CUT (DOOR)
UH	UNIT HEATER
UON	UNLESS OTHERWISE NOTED
V	VENT
VAV	VARIABLE AIR VOLUME
VD	VOLUME DAMPER
VEL	VELOCITY
VERT	VERTICAL
VFD	VARIABLE FREQUENCY DRIVE
VOL	VOLUME
VSD	VARIABLE SPEED DRIVE
W	WATT
W/	WITH
WC	WATER COLUMN
WFD	WATER PRESSURE DROP
WMS	WIRE MESH SCREEN
WT	WEIGHT
XA	VARIABLE LENGTH ACCESS

DUCTWORK SYMBOLS

DOUBLE LINE

- (E)12X12 — EXISTING DUCT
- EXISTING DUCT OR ITEM TO BE REMOVED
- EXISTING DUCT OR ITEM TO REMAIN
- BRANCH TAKE-OFF
- RADIUS ELBOW
- SQUARE TAP COLLAR
- RADIUS TEE
- BELLMOUTH CONNECTION TO RECT. DUCT
- CONICAL TEE
- WYE OR TEE
- EXHAUST/RETURN AIR DEVICE
- 24X12 — RECT. DUCT DIMENSIONS (SIZE IN INCHES. FIRST DIM. IS SHOWN)
- 24Ø — ROUND DUCT DIMENSIONS DIAMETERS
- 24/12 — FLAT OVAL (SIZE IN INCHES) (FIRST DIM. IS SHOWN)
- DUCT TRANSITION
- ELBOW TURNED DOWN
- ROUND DUCT DN
- SUPPLY AIR DUCT
- EXHAUST AND RETURN DUCT
- OUTSIDE AIR INTAKE
- FLEX. DUCT CONNECTION
- FIRE DAMPER (FD)
- CLEAN OUT
- MANUAL DAMPER
- MOTORIZED (AUTOMATIC) DAMPER (MD)
- LOW LEAKAGE MOTORIZED DAMPER (LLMD)
- ACCESS DOOR (AD)
- CAP
- DUCT OFF-SET DN (IN DIRECTION OF FLOW) (DN)
- DUCT OFF-SET UP (IN DIRECTION OF FLOW) (UP)
- FLEXIBLE DUCT
- AIR TERMINAL UNIT
- AIR TERMINAL UNIT W/REHEAT
- SOUND ATTENUATOR
- UC OR DG — DG: DOOR GRILLE; UC: DOOR UNDERCUT
- T — THERMOSTAT
- T — THERMOSTAT MOUNTED TO THERMOISOLATING PAD IF ON EXTERIOR COLUMN
- T — DUCT MOUNTED THERMOSTAT
- H — HUMIDISTAT
- SD — SMOKE DETECTOR
- CD — CARBON MONOXIDE DETECTOR
- CO_2 — CARBON DIOXIDE DETECTOR
- TS — TEMPERATURE SENSOR
- N.I.C. - FUTURE TENANT BUILDOUT
- REQUIRED MAINTENANCE CLEARANCE

IDENTIFICATION SYMBOLS

- X — KEYED NOTE TAG
- X / X — EQUIPMENT TAG; EQUIPMENT TAG NO.
- X / M-X — SECTION NUMBER; DRAWING ON WHICH SECTION IS SHOWN

AIR DEVICES DATA TAG

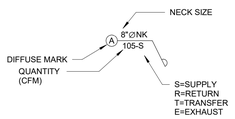

PIPING SYMBOLS

- (E)SERVICE — EXISTING PIPE
- EXISTING PIPE OR ITEM TO BE REMOVED
- EXISTING PIPE OR ITEM TO REMAIN
- CD — CONDENSATE DRAIN
- CWR — CHILLED WATER RETURN
- CWS — CHILLED WATER SUPPLY
- CTWR — COOLING TOWER WATER RETURN
- CTWS — COOLING TOWER WATER SUPPLY
- D — DRAIN
- G — NATURAL GAS
- HWR — HOT WATER HEATING RETURN
- HWS — HOT WATER HEATING SUPPLY
- V — V — VENT
- AIR SEPARATOR
- DIRECTION OF FLOW ARROW
- CONCENTRIC REDUCER
- ECCENTRIC REDUCER
- TEE
- TEE TURNED DOWN
- TEE TURNED UP
- ELBOW 45°
- ELBOW TURNED UP
- ELBOW TURNED DOWN
- PRESSURE GAUGE
- FLANGE
- CAPPED END CONNECTION
- EXPANSION JOINT
- FLEXIBLE CONNECTION
- FM — FLOW METER
- EXPANSION COMPENSATOR
- BALL VALVE
- PRESSURE INDEPENDANT FLOW CONTROL AND SHUT-OFF VALVE
- BUTTERFLY VALVE
- CHECK VALVE
- HOSE END DRAIN VALVE
- TRIPLE DUTY CHECK VALVE
- GATE VALVE
- MOTOR OPERATED VALVE
- GLOBE VALVE
- MANUAL AIR VENT
- M / M — MOTORIZED 2-WAY OR 3-WAY CONTROL VALVE
- SOLENOID VALVE
- PRESSURE REDUCING VALVE
- PRESSURE RELIEF VALVE
- GAS COCK
- PIPE UNION
- STRAINER
- SAFETY VALVE
- VACUUM BREAKER
- IN-LINE PUMP
- PRESSURE GAUGE WITH COCK
- THERMOMETER
- FLOW SWITCH
- PIPE ANCHOR
- PIPE GUIDE
- UNION
- Y-TYPE STRAINER
- Y-TYPE STRAINER WITH HOSE ENDED DRAIN VALVE
- BASKET STRAINER
- FILTER/DRYER
- M — MOTOR ACTUATOR
- T — CONDENSATE TRAP
- PRESSURE-TEMPERATURE PORT
- HEAT TRACE AND INSULATION

MECHANICAL CODE REFERENCE

2021 CITY OF AURORA BUILDING CODES AND AMENDMENTS
2015 INTERNATIONAL EXISTING BUILDING CODE (IEBC)
2015 INTERNATIONAL BUILDING CODE (IBC)
2015 INTERNATIONAL MECHANICAL CODE (IMC)
2015 INTERNATIONAL PLUMBING CODE (IPC)
2015 INTERNATIONAL ENERGY CONSERVATION CODE (IECC)

This sheet of drawings has not been reviewed for code compliance.

Salas O'Brien
salasobrien.com
Dublin
2751 Tuller Pkwy
Dublin, OH 43017
Registration:

CONFIDENTIAL
THIS DRAWING AND ASSOCIATED DESIGN ELEMENTS ARE CONFIDENTIAL AND THE PROPERTY OF SALAS O'BRIEN, WHICH RETAINS ALL COMMON LAW, COPYRIGHT, STATUTORY AND OTHER RIGHTS THERETO. ANY USE, DISCLOSURE, REPRODUCTION OR RETENTION IS PROHIBITED, UNLESS OTHERWISE AGREED TO BY SALAS O'BRIEN. THIS DRAWING (AS WELL AS ANY COPIES) SHALL BE RETURNED TO SALAS O'BRIEN UPON REQUEST.

PROFESSIONAL SEAL

COLORADO LICENSED MICHAEL P THOMPSON 50150 PROFESSIONAL ENGINEER

8/14/2023

ISSUE DATE	DESCRIPTION
08/01/2023	100% CD

2023-00034-00
HEALTHTRUST FACILITIGROUP

TMCA CATH LAB HVAC DEHUMIDIFICATION

1501 S. POTOMAC ST,
AURORA, CO 80012

REVISIONS

Δ	DESCRIPTION	DATE
0	ISSUED FOR CONSTRUCTION	08/01/23

CHECKED BY: EBM
DRAWN BY: KDR

SHEET NAME

MECHANICAL ABBREVIATIONS, SYMBOLS AND INDEX

SHEET NUMBER: M-001
REVISION: 0

Autodesk Docs://080-2023-0034 TMCA Cathlab Dehumidification Upgrades/2023-00034 TMCA Cathlab-Mech_R22_R2.rvt
8/1/2023 11:40:26 AM

RSN 1743619 Permit #2023 2378137-LT

MECHANICAL SPECIFICATIONS

GENERAL SPECIFICATIONS

1. HCA MAINTAINS PURCHASING AGREEMENTS FOR SELECT EQUIPMENT AND MATERIALS WHICH ARE OUTLINED IN THE HCA INNOVATION MEMORANDUMS. ALL MATERIALS AND EQUIPMENT PURCHASED UNDER THIS CONTRACT SHALL COMPLY WITH THE INNOVATION MEMORANDUMS. ALL PIPING RELATED ITEMS ARE TO BE PURCHASED THROUGH FERGUSON ENTERPRISE (ALTON LASSITER - 615-316-1848, ALTON.LASSITER@FERGUSON.COM).

2. WORK UNDER THIS SECTION IS SUBJECT TO THE REQUIREMENTS OF THE CONTRACT DOCUMENTS, INCLUDING THE DRAWINGS, GENERAL AND SUPPLEMENTARY CONDITIONS OF THE ARCHITECTURAL SPECIFICATIONS.

3. THE DRAWINGS AND SPECIFICATIONS SHALL BE UNDERSTOOD TO COVER SYSTEMS OF HEATING, VENTILATION AND AIR CONDITIONING, INSULATION, BUILDING AUTOMATION SYSTEMS AND TEMPERATURE CONTROL, AND TESTING AND BALANCING. THE DRAWINGS AND SPECIFICATIONS ARE TO BE TAKEN TOGETHER. WORK SPECIFIED AND NOT SHOWN, OR WORK SHOWN AND NOT SPECIFIED, SHALL BE AS BINDING AS THOUGH REQUIRED BY BOTH THE DRAWINGS AND SPECIFICATIONS.

4. MINOR ITEMS AND ACCESSORIES OR DEVICES REASONABLY INFERABLE AS NECESSARY TO THE COMPLETE AND PROPER OPERATION OF ANY SYSTEM SHALL BE PROVIDED FOR SUCH SYSTEMS, WHETHER OR NOT THEY ARE SPECIFICALLY CALLED FOR BY THE SPECIFICATIONS OR THE DRAWINGS.

5. THE CONTRACTOR SHALL PROCURE AND PAY FOR ALL NECESSARY PERMITS AND LICENSE FEES, MAKE ARRANGEMENTS FOR INSPECTIONS, PAY ALL FEES IN CONNECTION THEREWITH, EXCEPT BUILDING PERMIT, AND PAY ALL APPLICABLE FEDERAL, STATE AND LOCAL TAXES.

6. THE CONTRACTOR SHALL GUARANTEE ALL WORK TO BE FREE FROM DEFECTS IN MATERIALS AND WORKMANSHIP FOR A PERIOD OF ONE (1) YEAR IN ACCORDANCE WITH THE GENERAL CONDITIONS, UNLESS A LONGER PERIOD IS STIPULATED UNDER SPECIFIED HEADINGS. HE SHALL REPAIR OR REPLACE, AT NO ADDITIONAL COST TO THE OWNER, ANY MATERIAL OR EQUIPMENT DEVELOPING DEFECTS. REPAIRS OR REPLACEMENTS SHALL BEAR AN ADDITIONAL TWELVE (12) MONTHS GUARANTEE FROM THE TIME THE REPAIR OR REPLACEMENT IS COMPLETE. THIS REQUIREMENT SHALL BE BINDING, EVEN THOUGH IT WILL EXCEED PRODUCT GUARANTEES NORMALLY FURNISHED BY SOME MANUFACTURERS.

7. THE CONTRACTOR SHALL SUBMIT HIS OWN AND EACH MANUFACTURERS' WRITTEN CERTIFICATES AND WARRANTIES WHICH INDICATE THAT EACH ITEM OF EQUIPMENT FURNISHED, COMPLIES WITH ALL REQUIREMENTS OF THE DRAWINGS AND SPECIFICATIONS. GUARANTEES AND WARRANTIES SHALL COMMENCE FROM THE DATE OF THE SIGNED ACCEPTANCE BY THE OWNER OF A PARTICULAR ITEM OF EQUIPMENT OR A PARTICULAR DEFINED PORTION OF THE WORK.

8. ALL WORK SHALL BE INSTALLED IN CONFORMITY WITH ALL GOVERNMENTAL JURISDICTIONAL AUTHORITIES REGULATIONS, LAWS, RULES, OR ORDINANCES IN EFFECT AND GOVERNING SAME; SUCH RULES AND REGULATIONS AND LOCAL ORDINANCES TO BE CONSIDERED PART OF SPECIFICATIONS. MECHANICAL CONTRACTOR SHALL BE HELD STRICTLY RESPONSIBLE FOR ANY VIOLATION AND SHALL CHANGE HIS WORK TO CONFORM WITHOUT ADDITIONAL COST TO OWNER.

9. ALL WORK SHALL ALSO CONFORM TO THE PUBLISHED STANDARDS OF THE NATIONAL FIRE PROTECTION ASSOCIATION, AND ELECTRICAL WORK AND EQUIPMENT SHALL CONFORM TO REQUIREMENTS OF THE CURRENT ISSUE OF THE NATIONAL ELECTRICAL CODE. ALL MATERIALS, IN GENERAL, SHALL BE UNDERWRITERS' LABORATORIES LISTED AND SHALL BEAR UL LABEL WHERE LABELING SERVICE IS AVAILABLE.

10. WHERE JURISDICTIONAL RULES REQUIRE ASSISTANCE OF MECHANICS OF TRADES OTHER THAN THOSE ORDINARILY EMPLOYED BY A PARTICULAR MECHANICAL CONTRACTOR IN THE HANDLING, STORAGE OR SETTING OF SPECIAL EQUIPMENT, THE MECHANICAL CONTRACTOR SHALL EMPLOY SUCH TRADESMEN SO AS TO BE IN CONFORMANCE WITH LOCAL JURISDICTIONAL AGREEMENTS.

11. ANY SHUTDOWNS OF HVAC SYSTEMS SHALL BE COORDINATED WITH THE OWNER AND ASSUMED TO TAKE PLACE OVER NIGHTS AND WEEKENDS. ANY WORK REQUIRING OVERTIME SHALL INCLUDE THE COST FOR SUCH OVERTIME WORK AS A PART OF THE BASE BID PROPOSAL.

12. THE MECHANICAL CONTRACTOR SHALL BE RESPONSIBLE FOR ANY INTERFERENCE WITH OR DAMAGE TO ANY EXISTING UTILITIES AND SHALL REPAIR OR REPLACE ANY DAMAGED UTILITIES WITH THE LEAST POSSIBLE DELAY AND HOLD THE OWNER HARMLESS IN THE EVENT THAT THERE IS ANY DAMAGE.

13. CERTAIN ITEMS OF EQUIPMENT ARE SPECIFIED ON THE DRAWING EQUIPMENT SCHEDULES OR IN NOTES AS THE PRODUCT OF A SPECIFIC MANUFACTURER INCLUDING THE TRADE NAME, SIZE AND MODEL NUMBER. THIS IS TO ESTABLISH A STANDARD OF QUALITY AND TO MAKE PROVISIONS FOR POWER, SPACE ALLOWANCE, AND CONNECTIONS BY OTHER TRADES.

14. IF ALTERNATE MANUFACTURERS OTHER THAN THOSE NAMED IN THE DOCUMENTS ARE PROPOSED TO BE USED, THE BIDDER SHALL LIST SUCH OTHER ALTERNATE MANUFACTURERS ALONG WITH ANY COST ADDITIONS OR DEDUCTIONS FROM THE BASE BID PROPOSAL. IF THE OWNER ACCEPTS THE ALTERNATE MANUFACTURER, THE CONTRACT WILL SO STATE. IF THE CONTRACT DOES NOT CONTAIN THE NAMES OF ALTERNATE MANUFACTURERS, THE CONTRACTOR SHALL SUBMIT ONLY MANUFACTURERS NAMED IN THE DOCUMENTS.

15. IF THE MECHANICAL CONTRACTOR PROPOSES TO USE THE PRODUCT OF A MANUFACTURER OTHER THAN THE ONE NAMED IN THE DOCUMENTS, HE SHALL BE RESPONSIBLE FOR THAT ITEM OF EQUIPMENT FITTING IN PLACE WITH ADEQUATE CLEARANCES. FURTHER, IF DIFFERENT CONNECTIONS OR PROVISIONS ARE REQUIRED TO BE FURNISHED BY OTHER TRADES FROM THE PRODUCT NAMED IN THE DOCUMENTS, THE MECHANICAL CONTRACTOR SHALL BE RESPONSIBLE FOR NOTIFYING THE OTHER TRADES OF ANY CHANGES, AND IF ADDITIONAL COSTS ARE REQUIRED BY THE OTHER TRADES, HE SHALL PAY SUCH COSTS.

16. THE ENGINEER HAS NO CONTRACTUAL RESPONSIBILITY IN CONNECTION WITH JOB SITE SAFETY MEASURES OR PRECAUTIONS AS RELATED TO MEANS, METHODS, TECHNIQUES, SEQUENCES OR PROCEDURES IN THAT REGARD. THE MECHANICAL CONTRACTOR SHALL BE SOLELY AND COMPLETELY RESPONSIBLE FOR CONDITIONS OF THE JOB SITE, INCLUDING SAFETY OF ALL PERSONS AND PROPERTY DURING PERFORMANCE OF THE WORK. THIS REQUIREMENT WILL APPLY CONTINUOUSLY AND NOT BE LIMITED TO NORMAL WORKING HOURS. THE ARCHITECT/ENGINEER'S OBSERVATIONS OF THE MECHANICAL CONTRACTOR'S PERFORMANCE ARE NOT INTENDED TO INCLUDE REVIEW OF THE ADEQUACY OF THE MECHANICAL CONTRACTOR'S SAFETY MEASURES IN, ON OR NEAR THE CONSTRUCTION SITE. IT SHALL BE THE MECHANICAL CONTRACTOR'S RESPONSIBILITY TO COMPLY WITH "SAFETY AND HEALTH REGULATIONS FOR CONSTRUCTION", VOLUME 36, NO.75, PART II OF THE FEDERAL REGISTER BY THE U.S. DEPARTMENT OF LABOR. THE MECHANICAL CONTRACTOR SHALL BE RESPONSIBLE FOR PROVIDING ALL SUCH SAFETY MEASURES AND SHALL CONSULT WITH THE STATE OR FEDERAL SAFETY INSPECTOR FOR INTERPRETATION WHENEVER IN DOUBT AS TO WHETHER SAFE CONDITIONS DO OR DO NOT EXIST; OR WHETHER HE IS OR IS NOT IN COMPLIANCE WITH STATE OR FEDERAL REGULATIONS.

17. THE DRAWINGS ARE DIAGRAMMATIC IN NATURE AND SHOW GENERAL ARRANGEMENT OF ALL EQUIPMENT, PIPING, DUCTWORK, SERVICES, ETC. BECAUSE OF THE SMALL SCALE OF THE DRAWINGS, IT IS NOT POSSIBLE TO SHOW ALL OFFSETS, FITTINGS, AND ACCESSORIES WHICH MAY BE REQUIRED. FURNISH ALL FITTINGS, AND ACCESSORIES THAT MAY BE REQUIRED TO MEET SUCH CONDITIONS AND TO FIT WORK OF OTHER TRADES.

18. FURNISH ONE DIGITAL AND THREE (3) HARD COPY SETS OF SHOP DRAWINGS, SHOWING ALL DETAILS OF CONSTRUCTION FOR THE FOLLOWING:
    A. DUCTWORK LAYOUTS
    B. HYDRONIC PIPING ACCESSORIES
    C. AIR TERMINALS
    D. CONTROLS
    E. PRELIMINARY TEST AND BALANCE REPORT
    F. FINAL TEST AND BALANCE REPORT

19. REVIEW OF THE SHOP DRAWINGS IS RENDERED AS A SERVICE ONLY AND SHALL NOT BE CONSIDERED AS A GUARANTEE OF MEASUREMENTS OR OF BUILDING CONDITIONS; NOR SHALL IT BE CONSTRUED AS RELIEVING THE MECHANICAL CONTRACTORS OF BASIC RESPONSIBILITIES UNDER HIS CONTRACT.

20. ALL EQUIPMENT SUBMITTED AS SHOP DRAWINGS SHALL BE APPROVED BY THE GOVERNING JURISDICTIONAL AUTHORITIES PREVIOUS TO SUBMITTAL. SUBMISSION OF A SHOP DRAWING SHALL MEAN THAT APPROVAL HAS BEEN OBTAINED FOR INSTALLATION OF THE EQUIPMENT SUBMITTED FOR REVIEW.

21. AT COMPLETION OF THE PROJECT, ALL CHANGES AND DEVIATIONS FROM THE CONTRACT DOCUMENTS SHALL BE RECORDED BY THE MECHANICAL CONTRACTOR ON AS-BUILT DRAWINGS. SUPPLY TO THE ARCHITECT/ENGINEER DIGITAL COPIES AND FOUR PAPER BLUE LINE SETS.

22. THE OWNER, ARCHITECT, ENGINEER OR OTHERS WHO THEY MAY DESIGNATE SHALL BE PRIVILEGED TO ENTER AND OCCUPY THE BUILDING OR PORTIONS THEREOF, AT ANY TIME PRIOR TO COMPLETION OF THE MECHANICAL WORK WITHOUT PREJUDICE.

23. BEFORE MAKING ANY INSTALLATION, THE MECHANICAL CONTRACTOR SHALL CONFER WITH ALL OTHER CONTRACTORS WHOSE WORK MAY AFFECT THE WORK UNDER THEIR SECTIONS AND MAKE THE NECESSARY CHANGES TO AVOID INTERFERENCES OR IMPROPER EFFECT ON WORK TO BE PERFORMED BY ALL OTHER TRADES. IN THE EVENT THAT INTERFERENCES DEVELOP, THE ARCHITECT'S DECISION WILL BE FINAL AND NO ADDITIONAL COMPENSATION WILL BE ALLOWED FOR MOVING OF MISPLACED PIPING, DUCTS, CONDUIT AND/OR EQUIPMENT.

24. ALL MATERIALS AND/OR EQUIPMENT SHALL BE INSTALLED IN ACCORDANCE WITH MANUFACTURER'S RECOMMENDATIONS AND INSTRUCTIONS.

25. EACH MAJOR COMPONENT OF THE EQUIPMENT SHALL HAVE THE MANUFACTURER'S NAME, ADDRESS, MODEL NUMBER AND RATING ON A PLATE SECURELY AFFIXED IN A CONSPICUOUS PLACE. THE NAMEPLATE OF A DISTRIBUTING AGENT IS NOT ACCEPTABLE. ASME CODE RATINGS, OR OTHER DATA WHICH IS DIE-STAMPED INTO THE SURFACE OF THE EQUIPMENT SHALL BE IN A VISIBLE LOCATION.

26. USE ONLY NEW MATERIALS OF THE BEST QUALITY OF THEIR RESPECTIVE KINDS; LABOR SHALL BE DONE IN A THOROUGH WORKMANLIKE MANNER TO THE SATISFACTION OF THE ARCHITECT.

27. MATERIALS SHALL BE MANUFACTURED BY REPUTABLE MANUFACTURERS WHO HAVE BEEN PRODUCING THIS TYPE OF MATERIAL TO BE SOLD IN MAJOR CITIES IN THE UNITED STATES FOR A PERIOD OF AT LEAST FIVE (5) YEARS, UNLESS OTHERWISE NOTED HEREIN.

28. THE INSTALLATION OF ANY ACCESS PANEL IS STRICTLY LIMITED TO LOCATIONS AS INDICATED ON THE ARCHITECTURAL DRAWINGS OR APPROVED BY ARCHITECT.

29. FIRE STOPPING SHALL BE REQUIRED AT ALL FLOOR AND FIRE RATED WALL/PARTITION PENETRATIONS. FIRE STOPPING SYSTEMS SHALL BE AS DETAILED ON ARCHITECTURAL DRAWINGS.

30. DUCTWORK BEHIND THE GRILLES, REGISTERS, DIFFUSERS, ETC. WHICH IS EXPOSED TO VIEW THROUGH THE UNITS, SHALL BE GIVEN ONE (1) COAT OF PRIMER AND A FINISH COAT OF FLAT BLACK PAINT.

31. ALL WORKMANSHIP SHALL BE FIRST CLASS IN EVERY RESPECT AND SHALL BE PERFORMED ONLY BY SKILLED MECHANICS, RECOGNIZED AS SUCH IN THEIR RESPECTIVE TRADES.

32. FURNISH NECESSARY SCAFFOLDING, STAGING OR CRIBBING REQUIRED FOR THE COMPLETION OF THE WORK. SUCH SCAFFOLDING, ETC., SHALL BE REMOVED FROM THE PREMISES WHEN ITS USE IS NO LONGER REQUIRED ON THE JOB.

33. SHOULD DAMAGE TO ANY MECHANICAL, ELECTRICAL OR ARCHITECTURAL PART OF THE BUILDING OCCUR, PAY ALL COSTS TO THE RESPECTIVE SUBCONTRACTORS AFFECTED ON THE JOB TO MAKE REPAIRS AND/OR TEMPORARY CONNECTIONS REQUIRED.

34. OPENINGS MADE IN A FIRE RATED WALL, CEILING OR FLOOR SHALL BE EFFECTIVELY CLOSED AND REPAIRED SO THE FIRE RATING IS NOT REDUCED BELOW ORIGINAL FIRE RATING REQUIREMENTS.

35. FURNISH 8 COMPLETE PORTFOLIOS TO THE OWNER'S REPRESENTATIVE, CONTAINING AS- BUILT SHOP DRAWINGS, TEST AND BALANCE REPORTS, OPERATING INSTRUCTIONS, WARRANTIES, PARTS LISTS, WIRING DIAGRAMS, ETC., ON ALL EQUIPMENT FURNISHED UNDER THIS CONTRACTOR.

36. THE CONTRACTOR SHALL FURNISH A COMPETENT INSTRUCTOR TO ADVISE THE OWNER'S OPERATING PERSONNEL AS TO THE PROPER OPERATION, SERVICING, ETC., OF ALL EQUIPMENT AND SYSTEMS INSTALLED.

37. AT THE COMPLETION OF THE WORK, CONTRACTOR SHALL CLEAN ALL OF HIS WORK, EQUIPMENT, ETC., FREE FROM DUST, ETC., AND LEAVE THE WORK IN GOOD HOUSEKEEPING FASHION IN A MANNER ACCEPTABLE TO THE OWNER'S REPRESENTATIVE. PROVIDE NECESSARY FITTINGS, LAMPS, VALVES, ETC., AND LEAVE THE WORK CLEAN AND IN PERFECT OPERATING CONDITION.

38. WHEN DIRECTED, DURING CONSTRUCTION PERIOD, OPERATE SYSTEM WITH ALL FILTERS IN PLACE AND ALL CAULKING COMPLETE. DO NOT OPERATE OR PERMIT SUPPLY SYSTEM TO BE OPERATED WITHOUT FILTERS.

39. UNDER NO CIRCUMSTANCES SHALL ANY ITEMS OF NEW AIR HANDLING EQUIPMENT BE OPERATED FOR TEMPORARY HEAT OR VENTILATION WITHOUT FILTERS IN PLACE. IF THE UNIT IS USED BEFORE CONSTRUCTION IS COMPLETED, THE FILTERS SHALL BE REPLACED, THE UNIT AND COILS SHALL BE CLEANED AND THIS SET OF FILTERS SHALL NOT BE CONSIDERED AS THE SPARE SET OF FILTERS.

40. THE CONTRACTORS SHALL PROVIDE TEMPORARY HEAT AS REQUIRED FOR CONSTRUCTION AND FREEZE PROTECTION.

41. ALL TENDERS SUBMITTED ON THESE DRAWINGS AND SPECIFICATIONS SHALL BE BASED ON NEW MATERIALS AND APPARATUS OF MAKE AND QUALITY AS SPECIFIED. IF THE CONTRACTOR DESIRES, HE MAY ALSO TENDER ON MATERIALS AND APPARATUS WHICH SHALL BE OF SAME QUALITY AND OF SIMILAR SPECIFICATIONS TO THOSE AS HEREIN SPECIFIED, IN WHICH CASE HE SHALL STATE IN HIS TENDER ALL ADDITIONS OR DEDUCTIONS INVOLVED IN THE ALTERNATE MATERIALS AND APPARATUS, AND SHALL SPECIFY THE NAME OR MAKE ON WHICH HIS ALTERNATE IS BASED. WHEN NO ALTERNATES ARE GIVEN OR ACCEPTED PRIOR TO CONTRACT AWARD, THE MAKE SPECIFIED SHALL BE INSTALLED.

HVAC SYSTEM

1. THESE SPECIFICATIONS AND ACCOMPANYING DRAWINGS ARE TO COVER THE FURNISHINGS OF ALL LABOR, MATERIALS, EQUIPMENT, APPARATUS, SERVICE PERMANENT AND TEMPORARY FACILITIES AS NECESSARY TO THE HEATING AND AIR CONDITIONING WORK INVOLVED IN THE FURNISHING, INSTALLING, TESTING, ADJUSTING, RETESTING, READJUSTMENT AS REQUIRED AND DIRECTED, AND PLACING INTO APPROVED SATISFACTORY OPERATION THE COMPLETE RESPECTIVE SYSTEMS AS SHOWN ON THE DRAWINGS, CALLED FOR IN THE SPECIFICATIONS, AND AS REQUIRED BY THE JOB CONDITIONS.

2. BEFORE BEGINNING WORK, THE CONTRACTOR SHALL REVIEW THE MEDICAL EQUIPMENT VENDOR FINAL SHOP DRAWINGS FOR COORDINATION AND MEDICAL EQUIPMENT VENDOR EXPECTATIONS.

3. FURNISH AND INSTALL A COMPLETE AND OPERABLE SYSTEM FOR VENTILATING, HEATING AND AIR CONDITIONING CONSISTING OF, BUT NOT LIMITED TO:
    A. SUPPLY AND EXHAUST/RETURN DUCT SYSTEM
    B. GRILLES, DIFFUSERS, REGISTERS AND MANUAL VOLUME DAMPERS
    C. TESTING AND BALANCING

4. FURNISH ACCESS DOORS TO CEILING CONTRACTOR FOR ACCESS TO VALVES AND DAMPERS. ALL CONTROL DEVICES AND DAMPERS ABOVE INACCESSIBLE CEILINGS. LAY IN CEILINGS SHALL BE CONSIDERED ACCESSIBLE. PROVIDE 12"X12" (MIN.) ACCESS DOORS IN DUCTS FOR ACCESS TO FIRE DAMPERS, DUCT MOUNTED APPARATUSES, AND WHERE INDICATED FOR MAINTENANCE.

5. FURNISH AND INSTALL ALL INSULATION AS SPECIFIED.

6. FURNISH CUTTING AND CORING FOR INSTALLATION OF DUCTS AND EQUIPMENT. APPLICABLE STANDARDS AND CODES OF THE FOLLOWING:

   THE WORK UNDER THIS SECTION SHALL COMPLY WITH THE LATEST EDITION OF:
    A. IMC - INTERNATIONAL MECHANICAL CODE
    B. ASME - AMERICAN SOCIETY OF MECHANICAL ENGINEERS.
    C. ASHRAE - AMERICAN SOCIETY OF HEATING, REFRIGERATING AND AIR CONDITIONING
    D. ARI - AIR CONDITIONING AND REFRIGERATION INSTITUTE
    E. ASTM - AMERICAN SOCIETY FOR TESTING MATERIALS
    F. AABC - ASSOCIATED AIR BALANCE COUNCIL NFPA -NATIONAL FIRE PROTECTION ASSOCIATION
    G. SMACNA - SHEET METAL AND AIR CONDITIONING CONTRACTORS NATIONAL ASSOCIATION

7. EXERCISE CARE IN TRANSPORTING AND HANDLING TO AVOID DAMAGE TO FIXTURES, EQUIPMENT AND MATERIALS.

8. STORE MATERIALS ON THE SITE SO AS TO PREVENT DAMAGE.

9. KEEP EQUIPMENT AND MATERIALS CLEAN, DRY AND FREE FROM DELETERIOUS CONDITIONS.

10. ALL DUCTWORK SHALL BE FABRICATED FROM GALVANIZED SHEET STEEL OUTSIDE THE SHIELDING. THE DUCTS SHALL BE AIRTIGHT AND SHALL BE ANCHORED, BRACED AND REINFORCED TO PREVENT VIBRATION, LEAKAGE AND OIL CANNING. THE SPACING OF STIFFENERS SHALL BE CONSTRUCTED IN ACCORDANCE WITH SMACNA.

11. THE DUCTWORK SHALL BE SUPPORTED FROM THE BUILDING STRUCTURE WITH 1 INCH X 1/8 INCH SOLID GALVANIZED STRAP HANGERS (BOTH SIDES OF DUCT AT POINT OF SUPPORT) WITH GAGES AND SPACING AS SPECIFIED IN SMACNA.

12. UNLESS OTHERWISE NOTED, ALL ROUND ELBOWS SHALL HAVE CENTER LINED RADIUS EQUAL TO 1-1/2 TIMES THE WIDTH OF THE DUCT. IF SPACE DOES NOT PERMIT, THEN PROVIDE 6" THROAT WITH SPLITTER VANES. SEE DUCT CONSTRUCTION DETAILS.

13. ALL DUCTS SHALL BE CONSTRUCTED IN ACCORDANCE WITH SMACNA STANDARDS. DUCTWORK UPSTREAM OF VAV BOXES SHALL BE +4" PRESSURE CLASS. DUCTWORK DOWNSTREAM OF VAV BOXES SHALL BE +2" AND ALL EXHAUST/RETURN DUCTWORK SHALL BE -2" PRESSURE CLASS. ALL DUCTWORK SHALL BE SEAL CLASS A.

14. ALL DUCTWORK SHALL BE 22 GAUGE MINIMUM.

15. ROUND DUCTS AND FITTINGS SHALL BE FACTORY FABRICATED SPIRAL LOCK SEAM DUCT WITH MACHINE FORMED FITTINGS AS MANUFACTURED BY UNITED SHEET METAL. ALL FITTINGS SHALL BE SEALED WITH FIRE RETARDANT DUCT SEALER.

16. FLEXIBLE DUCTS SHALL BE FLEX MASTER OR APPROVED EQUAL. INSULATED FLEXIBLE DUCTS, SECURED WITH WORM DRIVE STAINLESS STEEL CLAMPS. DUCTS SHALL BE U.L. LISTED AND HAVE 2" W.G. GAUGE WORKING PRESSURE. 4'-0" MAXIMUM LENGTH.

17. FOR ALL OPERABLE DEVICES IN WALLS OR ABOVE INACCESSIBLE SUSPENDED CEILINGS, PROVIDE MILCOR ACCESS DOORS WITH SAME KEYED LOCKS AND CONCEALED HINGES. LAY IN CEILINGS ARE CONSIDERED ACCESSIBLE. SIZE AS REQUIRED FOR ACCESS.
    A. STYLE DW IN DRYWALL NO. 16 GA. FRAME NO. 14 GA. PANEL
    B. STYLE AP IN PLASTER NO. 16 GA. FRAME NO. 14 GA. PANEL
    C. STYLE M IN MASONRY NO. 16 GA. FRAME NO. 14 GA. PANEL

18. PROVIDE AN ADJUSTABLE BUTTERFLY OR OPPOSED MULTI BLADE VOLUME DAMPERS IN DUCTWORK ON EVERY BRANCH SERVING AIR TERMINAL DEVICES ON ALL SUPPLY, RETURN AND EXHAUST AIR DUCTWORK. DAMPERS SHALL BE 2 GAGES HEAVIER THAN DUCT IN WHICH THE DAMPER IS INSTALLED. CONSTRUCTION SHALL BE GALVANIZED SHEET METAL. EACH DAMPER SHALL BE PROVIDED WITH DAMPER ROD HELD IN PLACE WITH A CLAMPING DEVICE. VISIBLE END OF THE DAMPER RODS SHALL BE FILE MARKED WITH MARKS PARALLEL TO THE BLADES.

19. FIRE DAMPERS SHALL BE COMPLETE WITH WALL FRAME, SLEEVES, ANGLE IRON STOPS, LATCHES, SPRINGS AND FUSIBLE LINK, ETC., AND SHALL BE INSTALLED WHERE SHOWN ON THE DRAWINGS AND ELSEWHERE AS REQUIRED IN ACCORDANCE WITH NATIONAL BUREAU OF FIRE UNDERWRITER REGULATION BULLETIN 90-A. AND THE CITY OF CHICAGO FIRE PREVENTION BUREAU. THE FIRE DAMPERS SHALL BEAR UL LABEL. FIRE DAMPER SHALL BE 98% FREE AREA, AND BE OF THE LOW RESISTANCE TYPE WITH 1-1/2 HOUR OR 3 HOUR FIRE RATING CORRESPONDING TO THE ASSOCIATED WALL/BARRIER RATING AS MANUFACTURED BY PHILLIPS-AIRE AMERICAN WARNING AND VENTILATING, INC., AIR BALANCE, INC., OR RUSKIN MANUFACTURING.

20. ALL SUPPLY, RETURN, AND EXHAUST AIR OUTLETS SHALL BE MOUNTED TIGHTLY WITH RUBBER GASKETS TO PREVENT AIR LEAKAGE.

21. OUTLETS SHALL BE SELECTED AND GUARANTEED BY THE MANUFACTURER TO HANDLE THE AIR QUANTITIES AS SHOWN ON THE DRAWINGS WITH MAXIMUM PRESSURE DROP THROUGH THE OUTLET NOT EXCEEDING 0.10 IN OF WATER.

22. UNLESS OTHERWISE NOTED, DIFFUSERS, REGISTERS OR GRILLES SHALL BE FABRICATED FROM ALUMINUM OR STEEL AND SHALL BE PROVIDED WITH A FINISH COAT OF WHITE BAKED ENAMEL PAINT, UNLESS NOTED OTHERWISE. DIFFUSERS, REGISTERS AND GRILLES SHALL BE AS MANUFACTURED BY TITUS, OR APPROVED EQUAL.

23. DRILLED-IN THREADED INSERTS: PHILLIPS "REDHEAD" DRILLED-IN THREADED INSERTS SHALL BE PROVIDED. INSTALL IN ACCORDANCE WITH MANUFACTURER'S RECOMMENDATIONS.

24. PROVIDE ANCHOR BOLTS, NUTS SLEEVES FOR ANCHORING FANS, MOTORS AND ANY OTHER POWER-OPERATED EQUIPMENT.

25. ALL CONDITIONED SUPPLY AIR DUCTS SHALL BE INSULATED WITH 1 1/2" THICK FIBERGLASS INSULATION.

DUCTWORK:

1. DUCTWORK SHALL BE GALVANIZED SHEET METAL CONSTRUCTED & INSTALLED IN ACCORDANCE WITH THE SHEET METAL AND AIR CONDITIONING CONTRACTORS NATIONAL ASSOCIATION HVAC DUCT CONSTRUCTION STANDARDS, EXCEPT AS FOLLOWS:

2. INTERNAL LINING OF DUCTWORK SHALL NOT BE PERMITTED.

3. DUCTWORK THICKNESS SHALL BE 22 GAUGE MINIMUM EXCEPT FOR THE FOLLOWING:
    A. WHERE ANY WELDING OTHER THAN LONGITUDINAL SEAM IS PERFORMED, THE THICKNESS SHALL BE 18 GAUGE MINIMUM.

4. ROUND:
    A. ROUND DUCTS MAY BE SPIRAL OR LONGITUDINAL SEAM. LONGITUDINAL SEAMS SHALL BE CONTINUOUSLY WELDED. SNAPLOCK SEAMS ARE NOT PERMITTED.
    B. CRIMP JOINTS ARE NOT PERMITTED.
    C. PLEATED ELBOWS ARE NOT PERMITTED.
    D. ADJUSTABLE ELBOWS ARE NOT PERMITTED.
    E. MITERED ELBOWS WITH TURNING VANES ARE NOT PERMITTED IN ROUND DUCTWORK. USE RADIUS ELBOWS WITH CENTERLINE RADIUS AT LEAST AS GREAT AS THE DUCT WIDTH.

5. RECTANGULAR:
    A. BUTTON PUNCH SNAPLOCK SEAMS ARE NOT PERMITTED.
    B. TRANSVERSE (GIRTH) JOINTS T-4, 9, 17, 18, 20, AND 23 ARE NOT PERMITTED.
    C. MITERED ELBOWS WITH TURNING VANES ARE PERMITTED ONLY WHERE RADIUS ELBOWS WITH CENTERLINE RADIUS AT LEAST AS GREAT AS THE DUCT WIDTH IS NOT POSSIBLE.

6. SIZES OF NEW DUCT SHOWN ON DRAWINGS ARE FREE AIRWAYS SIZES, NOT OUTSIDE DIMENSIONS.

7. TEES SHALL HAVE 45° BOOTS AND TAPS ARE TO BE CONICAL.

8. FOR FINAL CONNECTIONS TO DIFFUSERS AND MODULATING DAMPER BOXES, FLEXIBLE DUCTS MAY BE USED FOR A MAXIMUM OF 2'-0" FEET. FLEXIBLE DUCTS SHALL BE U.L. LISTED, WITH 1" THICK FIBERGLASS INSULATION W/ VAPOR BARRIER. INSTALL FULLY EXTENDED W/ A MAXIMUM OF ONE 90° CHANGE OF DIRECTION, IN LENGTHS NO GREATER THAN NECESSARY. USE GENEROUS RADIUS TURNS AND SUPPORT AS REQUIRED TO PREVENT EXCESSIVE SAGGING. FLEXIBLE ELBOWS AT THE DIFFUSER INLET IS NOT PERMITTED.

9. PROVIDE ADJUSTABLE OPPOSED BLADE OR BUTTERFLY DAMPERS FOR ALL NEW LOW PRESSURE SUPPLY & RETURN BRANCHES. EXTRACTORS AND SPLITTER DAMPERS ARE NOT PERMITTED.

10. SEAL ALL JOINTS OF NEW DUCTWORK. INSPECT EXISTING DUCTWORK FOR LEAKS & REPORT RESULTS BEFORE CONNECTING NEW DUCTWORK. ALL DUCTWORK WITHIN THE CONSTRUCTION LIMIT LINE IS SUBJECT TO LEAK TESTS AS REQUIRED AND WITNESSED BY THE OWNER. SEE LATEST BUILDING CONSTRUCTION STANDARDS FOR SPECIFIC TESTING REQUIREMENTS. ALL MEDIUM PRESSURE DUCTWORK UPSTREAM OF VAV AND FAN POWERED BOXES SHALL BE 3" W.G. PRESSURE CLASS, SEAL CLASS A. DUCT SEALANT SHALL BE WATER-BASED-UNITED McGILL OR APPROVED EQUAL. PRESSURE SENSITIVE TAPE IS UNACCEPTABLE. GASKETED FLANGES SHALL BE SEALED WITH A MASTIC.

11. PROTECT NEW & EXISTING DUCT OPENINGS FROM DUST & DIRT. CLEAN INSIDE & OUTSIDE OF NEW & EXISTING DUCTWORK IN AREA OF NEW WORK. REPLACE FILTERS AS REQUIRED DURING CONSTRUCTION PERIOD AND PROVIDE NEW SETS OF FILTERS AFTER COMPLETION OF WORK.

12. INSULATION
    A. INSULATION SHALL BE OWENS-CORNING, CERTAINTEED, ARMSTRONG, OR GUSTIN-BACON. NEW SUPPLY AIR DUCTWORK ABOVE CEILINGS SHALL BE INSULATED WITH MIN. 1-1/2" THICK, 1# DENSITY FIBERGLASS WRAP WITH FIRE RETARDANT VAPOR-BARRIER COVERING TO PROVIDE A MAXIMUM INSTALLED CONDUCTANCE OF 0.16.
    B. OVERLAP ALL SEAMS AND JOINTS & SECURE WITH MANUFACTURER APPROVED ADHESIVE TO PROVIDE CONTINUITY OF VAPOR BARRIER.
    C. ALL NEW SUPPLY DUCTWORK SHALL BE INSULATED.
    D. ALL EXTERIOR HVAC DUCTING SHALL BE INSULATED USING CLOSED CELL INSULATION AND WEATHER JACKETED USING POLYGUARD ALUMAGUARD SELF-ADHERING CLADDING AND SEALING TAPE. INSULATION AND DUCTWORK TO BE PROTECTED FROM HAIL DAMAGE.

PIPING:

1. HEATING WATER 2" OR SMALLER SHALL COPPER PIPE TYPE L WITH SOLDER JOINTS.

2. DIELECTRIC FITTINGS SHALL BE USED BETWEEN STEEL AND COPPER PIPING.

3. VICTAULIC AND "PRESSFIT" SHALL NOT BE USED FOR ANY HVAC PIPING. PRESSURE AND GROOVED FITTINGS ARE NOT ALLOWED.

4. PIPING AND BUFFER TANK INSULATION
    A. HEATING WATER PIPING INSULATION TO BE MIN. 1-1/2" THICK FOR PIPING 1-1/4" AND SMALLER, AND MIN. 2" THICK FOR PIPING 1-1/2" AND LARGER.
    B. HEATING WATER PIPING SHALL BE INSULATED WITH MOLDED FIBERGLASS WITH ASJ FINISH.
    C. PROVIDE HIGH DENSITY INSULATION INSERTS FOR PIPING LARGER THAN 2" DIAMETER.

5. GENERAL INSULATION
    A. FITTINGS ON FIBERGLASS PIPE INSULATION SHALL BE MITERED INSULATION UP TO 2" DIAMETER AND MOLDED FITTINGS FOR 2-1/2" AND LARGER. ALL INDOOR FITTING INSULATION SHALL BE COVERED WITH A TIGHT FITTING PVC JACKET.
    B. PROVIDE A SEMI-CYLINDRICAL GALVANIZED SHEET METAL INSULATION SHIELD AT ALL HANGERS TO REDUCE COMPRESSION OF INSULATION.
    C. CHILLED WATER SUPPLY AND RETURN PIPING SHALL BE INSULATED WITH 1 1/2" CELLULAR GLASS INSULATION AND ALUMINUM JACKET.
    D. 30% GLYCOL CHILLED WATER SUPPLY AND RETURN PIPING SHALL BE INSULATED WITH 2" CELLULAR GLASS INSULATION AND ALUMINUM JACKET.
    E. 30% CHILLED WATER BUFFER TANK SHALL BE INSULATED WITH 2" CELLULAR GLASS INSULATION AND ALUMINUM JACKET.
    F. FITTINGS ON FOAM GLASS INSULATION SHALL BE MITERED SECTIONS OF FOAM GLASS INSULATION AND ALUMINUM JACKET.

6. VALVES
    A. ACCEPTABLE MANUFACTURERS:
        a. BRONZE BODY VALVES: KITZ, NIBCO, GRINNELL, MILWAUKEE, OR KENNEDY
        b. BALL VALVES: KITZ, NIBCO, APOLLO, WATTS, MILWAUKEE, OR HAMMOND
    B. CLEANING AND FLUSHING
        a. FLUSH ALL PIPING WITH A MINIMUM VELOCITY OF 5 FT/SECOND FOR 30 MINUTES. ADD CLEANING MATERIALS AS RECCOMENDED BY CHEMAQUA AND BLOWDOWN STRAINER SCREENS. DRAIN THE SYSTEM AFTER CIRCULATING CHEMICAL CLEANER FOR 12 HOURS. AFTER SYSTEM IS DRAINED, REFILL WITH WATER AND SYSTEM CHEMICALS AS RECCOMENDED BY CHEMAQUA.
    C. PROVIDE CLAMP LOCK HAND LEVER OPERATORS ON VALVES LESS THAN 8".
    D. SHUTOFF VALVES FOR WATER PIPING 2" AND SMALLER SHALL BE BALL TYPE.
    E. HYDRONIC VALVES
        a. VALVES SHALL BE MANUFACTURED IN ACCORDANCE WITH THE MANUFACTURER'S SPECIFICATIONS AND SHALL COMPLY WITH THE PERFORMANCE REQUIREMENTS OF ASTM F 2389 OR CSA B137.11. THE VALVES SHALL CONTAIN NO REWORK OR RECYCLED THERMOPLASTIC MATERIALS EXCEPT THAT GENERATED IN THE MANUFACTURER'S OWN PLANT FROM RESIN OF THE SAME SPECIFICATION FROM THE SAME RAW MATERIAL.
        b. VALVES, OR ALTERNATES SPECIFICALLY DESIGNED FOR, SHALL BE NIRON AVAILABLE FROM NUPI AMERICAS AND PRODUCED USING MANUFACTURER AUTHORIZED MATERIALS.
    F. BALL VALVES
        a. APPLICATION: SHUTOFF 2" AND SMALLER
        b. BODY: BRONZE WITH <15% ZINC
        c. BALL AND TRIM: STAINLESS STEEL, VENTED BALL
        d. CONNECTIONS: THREADED OR SOLDER ENDS
        e. PRESSURE RATING: 125 PSI
        f. ALLOWABLE SEAT/SEAL MATERIALS: PTFE, EPDM, NEOPRENE, BUNA-N
    G. STRAINERS
        a. APPLICATION: 2" AND SMALLER
        b. BODY: BRONZE WITH <15% ZINC
        c. PRESSURE RATING: 125 PSI
        d. STRAINER SCREEN: STAINLESS STEEL WITH 3/64" MESH
        e. CONNECTIONS: SCREWED ENDS
        f. GENERALS: PROVIDE WITH THREADED NIPPLE AND SHUTOFF VALVE FOR BLOWDOWN

VIBRATION ISOLATION:

1. EXHAUST FAN
    A. PROVIDE SPRING ISOLATED BASE FOR EXHAUST FAN.
    B. MINIMUM DEFLECTION OF SPRINGS SHALL BE 3/4".
    C. SPRINGS SHALL BE COATED OR RATED FOR OUTDOOR ENVIRONMENT.
    D. STRUCTURAL MEMBERS SHALL BE GALVANIZED.

2. ACCEPTABLE MANUFACTURERS:
    A. MASON INDUSTRIES, KINETICS NOISE CONTROL, VIBRATION ELIMINATOR CO., VIBRATION MOUNTINGS & CONTROLS, INC., KORFUND CO., AMBER BOOTH, VIBRO-ACOUSTICS, OR HYSPAN.

PIPE LABELING:

1. PROVIDE ADHESIVE BACKED PIPE MARKERS ON ALL PIPING IN THE PRIMARY AREA OF WORK.

2. LETTERING SHALL BE AT LEAST 1-1/2" HIGH.

3. PROVIDE FLOW DIRECTION ARROWS WRAPPING AROUND THE ENTIRE CIRCUMFERENCE OF THE PIPE ON BOTH THE UPSTREAM AND DOWNSTREAM ENDS OF THE PIPE LABEL.

4. HEATING WATER SHALL USE WHITE LETTERING ON GREEN BACKGROUND.

5. PROVIDE LABELS AT LEAST ONCE EVERY 20 FEET OR AT LEAST ONE IN EACH ROOM AT A MINIMUM.

6. APPLICATION SCHEDULE:
    A. "HEATING WATER SUPPLY": WHITE LETTERS ON GREEN BACKGROUND
    B. "HEATING WATER RETURN": WHITE LETTERS ON GREEN BACKGROUND
    C. "DOMESTIC COLD WATER": WHITE LETTERS ON GREEN BACKGROUND
    D. "45°F CHILLED WATER SUPPLY": WHITE LETTERS ON DARK BLUE BACKGROUND
    E. "45°F CHILLED WATER RETURN": WHITE LETTERS ON LIGHT BLUE BACKGROUND
    F. "35°F 30% GLYCOL WATER SUPPLY": WHITE LETTERS ON DARK PURPLE BACKGROUND
    G. "35°F 30% GLYCOL WATER RETURN": WHITE LETTERS ON LIGHT PURPLE BACKGROUND
    H. SANITARY SEWER: BLACK LETTERS ON YELLOW BACKGROUND

VALVE TAGS:

1. PROVIDE BRASS TAGS HUNG FROM VALVES WITH MINIMUM 1" HIGH ENGRAVED LETTERING FOR ALL NEW VALVES.

2. PROVIDE VALVE DIRECTORY IN CLOSEOUT DOCUMENTS.

CEILING INDICATORS:

1. PROVIDE COLORED MARKERS ON THE CEILING GRID INDICATING VALVE AND VAV BOX LOCATION ABOVE THE CEILING.

TEMPERATURE CONTROLS:

1. EXISTING TEMPERATURE CONTROLS SYSTEM BY JOHNSON CONTROLS INC TO REMAIN. NEW EQUIPMENT TO TIE INTO EXISTING BAS.

2. COORDINATE ALL CONTROL WIRING AND POWER REQUIREMENTS WITH ELECTRICAL CONTRACTOR. CONTROL CONTRACTOR SHALL TERMINATE ALL POWER AND CONTROL WIRING TO CONTROL DEVICES.

TESTING AND BALANCING OF AIR SYSTEMS:

1. TESTING AND BALANCING OF AIR SYSTEMS SHALL BE PERFORMED BY AN INDEPENDENT SUB-CONTRACTOR DIRECT TO THE GENERAL CONTRACTOR SPECIALIZING IN SUCH WORK AND IS A MEMBER OF THE ASSOCIATED AIR BALANCE COUNCIL.

2. BALANCE AND TESTING SHALL NOT BEGIN UNTIL EACH SYSTEM HAS BEEN COMPLETED AND IS IN FULL WORKING ORDER. CONTRACTORS SHALL PUT ALL THEIR EQUIPMENT INTO FULL OPERATION AND SHALL CONTINUE THE OPERATION OF SAME DURING EACH WORKING DAY OF TESTING AND BALANCING.

3. TESTING AND BALANCING SHALL BE PERFORMED IN COMPLETE ACCORDANCE WITH THE SMACNA MANUAL OR THE AABC NATIONAL STANDARDS FOR FIELD MEASUREMENT AND INSTRUMENTATION AND THE LEGACY SPECIFICATIONS, SECTION.

4. UPON COMPLETION OF THE WORK, THE BALANCE CONTRACTOR SHALL COMPILE ALL TEST DATA AND SUBMIT 8 TYPEWRITTEN COPIES OF THE COMPLETE TEST DATA TO THE ARCHITECT FOR EVALUATION AND APPROVAL. ALL REPORTS SHALL BE MADE ON FORMS AS RECOMMENDED BY EITHER AGENCY.

5. PERFORM A PRE-BALANCE OF EXHAUST FAN EF-97-3 AND ALL ASSOCIATED AIR TERMINALS AS FOLLOWS:
    A. CATH LAB 4 AHU
        a. TAG NAME
        b. SERVICE
        c. MANUFACTURER
        d. MODEL
        e. EXHAUST AIRFLOW (CFM)
        f. TOTAL STATIC PRESSURE (IN. W.C.)
        g. MOTOR HORSEPOWER (HP)
        h. MOTOR AMPS (EA. PHASE)
    B. AIR TERMINALS (GRILLES):
        a. ROOM NAME & NUMBER
        b. GRILLE # (EACH ROOM)
        c. DESIGN CFM (FROM EXISTING DRAWINGS - AS INDICATED)
        d. ACTUAL EXHAUST AIRFLOW (CFM)

6. THE BALANCE CONTRACTOR SHALL PERFORM THE FOLLOWING TESTS, AND BALANCE EACH SYSTEM IN ACCORDANCE WITH THE FOLLOWING REQUIREMENTS:
    A. ADJUST ALL SUPPLY, RETURN AND EXHAUST AIR DUCTS TO PROPER DESIGN AIR FLOWS.
    B. ADJUST AND RECORD ALL ZONES TO PROPER DESIGN AIR FLOWS, BY MEANS OF DUCT TRAVERSE METHOD.
    C. TEST AND ADJUST EACH DIFFUSER, GRILLE AND REGISTER TO WITHIN PLUS OR MINUS 10% OF DESIGN REQUIREMENTS. EACH GRILLE, DIFFUSER AND REGISTER SHALL BE IDENTIFIED AS TO LOCATION, SIZE, TYPE, MANUFACTURER OF AND ALL TESTED EQUIPMENT SHALL BE IDENTIFIED AND LISTED. MANUFACTURER'S RATINGS ON ALL EQUIPMENT SHALL BE USED TO MAKE REQUIRED CALCULATIONS AND FINAL DATE BALANCED.
    D. READINGS AND TEST OF DIFFUSERS, GRILLES AND REGISTERS SHALL INCLUDE REQUIRED FPM VELOCITY, TEST RESULTANT VELOCITY, REQUIRED CFM, TEST RESULTANT CFM AFTER ADJUSTMENTS AND FINAL DATE BALANCED.
    E. IN COOPERATION WITH THE EQUIPMENT OR CONTROL MANUFACTURER'S REPRESENTATIVE, ADJUST AUTOMATICALLY OPERATED DAMPERS TO OPERATE AS SPECIFIED, INDICATED AND/OR NOTED.
    F. ADJUST ALL DIFFUSERS, GRILLES AND REGISTERS TO PROVIDED PROPER AIR DISTRIBUTION AND TO MINIMIZE DRAFTS IN ALL AREAS.
    G. ADJUSTMENT OF ALL DAMPERS, FANS OR BLOWER SPEED, BELT TENSION, ETC., SHALL BE BY THIS CONTRACTOR. PROVIDE NEW SHEAVES OR BELTS IF REQUIRED FOR BALANCING.

7. AFTER THE AIR BALANCING WORK HAS BEEN COMPLETED, IT MAY BE NECESSARY TO PROVIDE COMFORT REBALANCE. THIS CONTRACTOR SHALL PROVIDE ALL BALANCE WORK FOR READJUSTMENTS.

This sheet of drawings has not been reviewed for code compliance.

Salas O'Brien
salasobrien.com
Dublin
2751 Tuller Pkwy
Dublin, OH 43017
Registration:

CONFIDENTIAL
THIS DRAWING AND ASSOCIATED DESIGN ELEMENTS ARE CONFIDENTIAL AND THE PROPERTY OF SALAS O'BRIEN, WHICH RETAINS ALL COMMON LAW, COPYRIGHT, STATUTORY AND OTHER RIGHTS THERETO. ANY UNAUTHORIZED USE, REUSE OR REPRODUCTION IS PROHIBITED. UNLESS OTHERWISE AGREED TO BY SALAS O'BRIEN, THIS DRAWING (AS WELL AS ANY COPIES) SHALL BE RETURNED TO SALAS O'BRIEN UPON REQUEST.

PROFESSIONAL SEAL

8/14/2023

ISSUE DATE	DESCRIPTION
08/01/2023	100% CD

2023-00034-00
HEALTHTRUST FACILITIGROUP

TMCA CATH LAB HVAC DEHUMIDIFICATION

1501 S. POTOMAC ST,
AURORA, CO 80012

REVISIONS

Δ	DESCRIPTION	DATE
0	ISSUED FOR CONSTRUCTION	08/01/23

CHECKED BY EBM **DRAWN BY** KDR

SHEET NAME
MECHANICAL SPECIFICATIONS

SHEET NUMBER M-002 **REVISION** 0

Autodesk Docs://080-2023-0034 TMCA Cathlab Dehumidification Upgrades/2023-00034 TMCA Cathlab-Mech_R22_R2.rvt
8/1/2023 11:40:27 AM

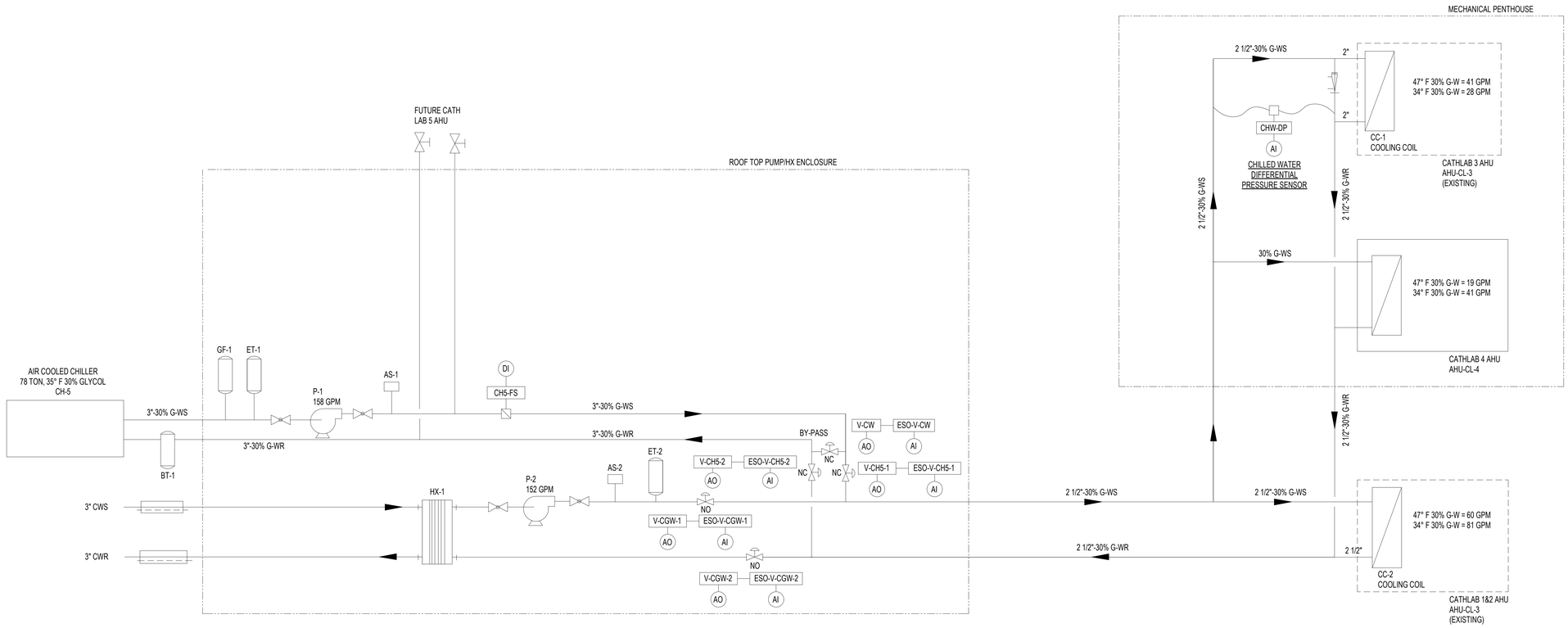

30% GLYCOL/CHILLED WATER P&ID

PENETRATIONS -ANNULAR SPACES SHALL COMPLY WITH IPC 315.1 IBC 714

City of Aurora Building Division
Reviewed for Code Compliance
Approved as Noted: Kirk Nagle
Date: Sep 08, 2023
2021 INTERNATIONAL CODES & 2023 NEC

LOW TEMP CHILLED WATER SYSTEM DIAGRAM AND SEQUENCE OF OPERATION

GENERAL DESCRIPTION

THE EXISTING JCI BAS SHALL CONTROL, MONTOR AND AUTOMATE THE OPERATION OF THE CHILLED GLYCOL WATER (CGW) SYSTEM. THIS CONFIGURATION CONSISTS OF ONE AIR COOLED CHILLER AND ONE CGW SYSTEM THAT CAN BE OPERATED AT TWO TEMPERATURE SET POINTS.

NORMAL COOLING – CHILLER NO.5 WILL NOT BE OPERATING. PUMP 2 WILL BE OPERATING TO CIRCULATE CGW FROM HX1 TO THE 3 AHU COOLING COILS.

HIGH SPACE HUMIDITY – WHEN ONE OF THE THREE THE SPACE HUMIDISTATS CAN NOT MAINTAIN SETPOINT FOR MORE THAN 10 MINUTES AND THE REQUIRED WET BULB COOLING TEMPERATURE IS BELOW 48°F, CHILLER NO.5 WILL BE OPERATING WITH PUMP#1 CIRCULATING 34°F CGW TO THE THREE AHU'S COOLING COILS.

STARTING THE LOW TEMP. CHILLER

THE BAS WILL MONITOR THE THREE RA HUMIDISTATS AND IF ANY OF THE RA HUMIDISTATS CANNOT MAINTAIN SET POINT FOR 10 MINUTES, CHILLER #5 AND PUMP1 WILL BE STARTED WITH THE BY-PASS VALVE OPEN. ONCE THE CGW TEMPERATURE HAS REACHED 34°F, THE CHILLER ISOLATION VALVES WILL BE OPENED, THE 48°F CGW VALVES WILL BE CLOSED AND PUMP 2 WILL BE STOPPED.MODE CALCULATE THE REQUIRED LEAVING AIR TEMPERTURE.

STOPPING LOW TEMP. CHILLER

THE BAS WILL MONITOR THE THREE RA HUMIDISTATS AND CALCULATE THE REQUIRED LEAVING AIR TEMPERTURES. IF THE LEAVING AIR TEMPERTURE IS ABOVE 48°F FOR 10 MINUTES, THE 48°F ISOLATION VALVE WILL BE OPENED AND PUMP 2 WILL BE STARTED. THE CHILLER BY-PASS VALVE WILL BE OPENED, THE ISOLATION VALVES WILL BE CLOSED, CHILLER #5 WILL BE UNLOADED, CHILLER #5 WILL BE STOPPED AND PUMP 1 WILL BE STOPPED.

CGW TEMPERATURE CONTROL

WHEN OPERATING ON PUMP2 USING PLANT CHILLED WATER FOR COOLING THROUGH HX1, NO TEMPERATURE CONTROL WILL BE REQUIRED. WHEN OPERATING ON CHILLER #5 AND PUMP1, THE CGW SUPPLY SET POINT SHALL BE 34°F (ADJ.) DURING NORMAL OPERATION CHILLER #5 CONTROLLERS SHALL MODULATE THE CHILLER TO ACHIEVE TEMPERATURE SET POINT PROVIDED BY THE BAS.

CGW PUMP SPEED CONTROL

THEOPERATING CGW PUMP SPEED SHALL BE MAINTAINED THROUGH A PID LOOP CONTROL. THE SPEED OF THE CGW PUMPS SHALL BE MODULATED TO MANINTAIN THE SYSTEM DIFFERENTIAL PRESSURE AS SENSED BY THE DIFFERENTIAL PRESSURE SENSOR INSTALLED ACROSS THE REMOTE SUPPLY AND RETURN LINES.

HYDRONIC TESTING AND BALANCE

1. PREPARATION – PREPARE TAB PLAN THAT INCLUDES STRATAGIES AND STEP-BT-STEP PROCEDURES.
2. COMPLATE THE SYSTEM READINESS CHECKS AND PRPARE SYSTEM READINESS REPORTS. VERIFY THE FOLLOWING
   a. PERMANENT ELECTRICAL POWER AND WIRING IS COMPLETE.
   b. HYDRONIC SYSTEMS ARE FILLED, CLEAN AND FREE OF AIR.
   c. ISOLATING AND BALANCING VALVES ARE OPEN AND OPERATIONAL.
3. PERFORM TESTING AND BALNCING PROCEDURES ON EACH SYSTEM ACCORDING TO THE PROCEDURES CONTAINED IN NEBB'S "PROCEDURAL STANDARDS FOR TESTING, ADJUSTING AND BALANCING ENVIRONMENTAL SYSTEMS" AND THIS SECTION.
4. CUT INSULATION ON PIPES FOR INSTALLATION OF TEST PROBES TO THE MINIMUM EXTENT NECESSARY TO ALLOW ADEQUATE PERFORMANCE OF PROCEDURES. AFTER TESTING AND BALANCING, CLOSE OPENINGS AND PATCH INSULATION WITH NEW MATERIAL IDENTICAL TO THOSE REMOVED.
5. MARK EQUIPMENT AND BALANCE DEVICE SETTINGS WITH PERMANENT IDENTIFICATION MATERIAL TO SHOW FIANL SETTINGS.
6. PREPARE TEST REPORTS WITH PERTINENT DESIGN DATA AND NUMBER AT PUMP TO END OF SYSTEM. CHECK THE SUM OF BRANCH-CIRCUIT FLOWS AGAINST APPROVED PUMP FLOW RATE. CORRECT VARIATIONS THAT EXCEED PLUS OR MINUS 5 PERCENT.
7. PREPARE SCHEMATIC DAIGRAMS OF SYSTEM "AS-BUILT" PIPING LAYOUT.
8. PREPARE HYDRONIC SYSTEM FOR TESTING AND BALANCING ACCORDING TO THE FOLLOWING. IN ADDITION TO THE GENERAL PREPARATION PROCEEDURES ABOVE:
   a. OPEN ALL MANUAL VALVES FOR MAXIMUM FLOW.
   b. CHECK BUFFER TANK LIQUID LEVEL.
   c. CHECK EXPANSION TANK LIQUID LEVEL.
   d. CHECK EXPANSION TANK PRESSURE GAGE FOR ADEQUATE PRESSURE AT HIGHEST VENT.
   e. CHECK FLOW-CONTROL VALVES FOR SPECIFIED SEQUENCE OF OPERATION AND SET AT INDICATED FLOW.
   f. SET SYSTEM CONTROLS SO AUTOMATIC VALVES ARE WIDE OPEN TO HEAT EXCHANGERS AND COOLING COILS.
   g. CHECK PUMP-MOTOR LOAD. IF MOTOR IS OVERLOADED THROTTLE MAIN FLOW SO MOTOR NAMEPLATE RATING IS NOT EXCEEDED.
9. PROCEDURE FOR VARIABLE FLOW HYDRONIC SYSTEMS – BALANCE SYSTEM CONTROLS WITH AUTOMATIC CONTROL VALVES BY SETTING MAXIMUM FLOW THROUGH HEAT EXCHANGER AND COOLING COILS. PROCEED AS SPECIFIED ABOVE FOR HYDRONIC SYSTEMS.
10. PROCEDURE FOR PLATE HEAT EXCHANGER
    a. ENTERING AND LEAVING CHILLED GLYCOL WATER TEMPERATURE.
    b. ENTERING AND LEAVING CHILLED GLYCOL WATER TEMPERATURE.
    c. CHILLED WATER FLOW.
    d. CHILLED WATER PRESSURE DROP.
    e. CHILLED GLYCOL FLOW.
    f. CHILLED GLYCOL PRESSURE DROP.
11. PROCEDURE FOR COOLING COILS – MEASURE THE FOLLOWING DATA FOR EACH COIL:
    a. ENTERING AND LEAVING CHILLED GLYCOL WATER TEMPERATURE.
    b. WATER TEMPERTAURE FLOW RATE.
    c. WATER PRESSURE DROP
    d. ENTERING AND LEAVING AIR DRY BULB TEMPERATURE.
    e. ENTERING AND LEAVING AIR WET BULB TEMPERATURE.
    f. AIR FLOW.
    g. AIR PRESSURE DROP.
12. FINAL REPORT SHALL BE TYPE WRITTEN OR COMPUTER PRINT OUT IN LETTER QUALITY FONT ON STANDARD BOND PAPER. IN THREE RING BINDER TABULATED AND DIVIDED INTO SECTIONS INCLUDING THE FOLLOWING AND THE DATA ABOVE.
13. UNIT DATA
    a. AHU, PUMP, CHILLER UNIT, COOLING COIL, OR HEAT EXCHANGER IDENTIFICATION
    b. MANUFACTURER AND MODEL NUMBER
    c. NAME PLATE CAPACITY
14. MOTOR DATA:
    a. MAKE AND FRAME TYPE AND SIZE
    b. HORSEPOWER AND RPM
    c. VOLTS, PHASE, AND HERTZ
    d. FULL LOAD AMPS AND SERVICE FACTOR
15. INSTRUMENT CALIBRATION REPORTS:
    a. INSTRUMENT TYPE AND MAKE
    b. SERIAL NUMBER
    c. APPLICATION
    d. DATES OF USE
    e. DATES OF CALIBRATION

Salas O'Brien
salasobrien.com
Dublin
2751 Tuller Pkwy
Dublin, OH 43017
Registration:

CONFIDENTIAL
THIS DRAWING AND ASSOCIATED DESIGN ELEMENTS ARE CONFIDENTIAL AND THE PROPERTY OF SALAS O'BRIEN, WHICH RETAINS ALL COMMON LAW, COPYRIGHT, STATUTORY AND OTHER RIGHTS THERETO. COPYING, USE OR DISCLOSURE WITHOUT PERMISSION IS PROHIBITED, UNLESS OTHERWISE AGREED TO BY SALAS O'BRIEN, THIS DRAWING (AS WELL AS ANY COPIES) SHALL BE RETURNED TO SALAS O'BRIEN UPON REQUEST.

PROFESSIONAL SEAL

COLORADO LICENSED MICHAEL P THOMPSON 52150 PROFESSIONAL ENGINEER
8/14/2023

ISSUE DATE	DESCRIPTION
08/01/2023	100% CD

2023-00034-00
HEALTHTRUST FACILITIGROUP

TMCA CATH LAB HVAC DEHUMIDIFICATION

1501 S. POTOMAC ST,
AURORA, CO 80012

REVISIONS

Δ	DESCRIPTION	DATE
0	ISSUED FOR CONSTRUCTION	08/01/23

CHECKED BY EBM
DRAWN BY KDR

SHEET NAME

30% GLYCOL / CHILLED WATER MECHANICAL P&ID

SHEET NUMBER M-100
REVISION 0

Autodesk Docs://080-2023-0034 TMCA Cathlab Dehumidfication Upgrades/2023-00034 TMCA Cathlab-Mech_R22_R2.rvt
8/1/2023 11:40:27 AM

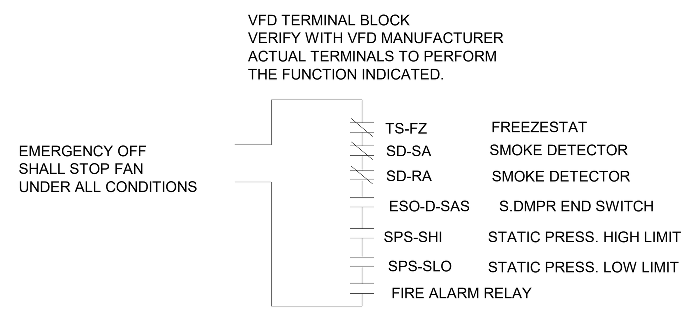

AHU SUPPLY FAN SAFETY WIRING

HARDWIRED SAFETIES IN ADDITION TO NETWORK INTERFACE BETWEEN VFD AND DDC CONTROL SYSTEM.

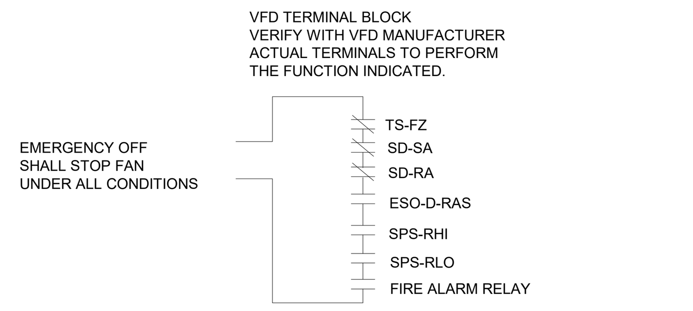

AHU RETURN FAN SAFETY WIRING

HARDWIRED SAFETIES IN ADDITION TO NETWORK INTERFACE BETWEEN VFD AND DDC CONTROL SYSTEM.

PENETRATIONS -ANNULAR SPACES SHALL COMPLY WITH IPC 315.1 IBC 714

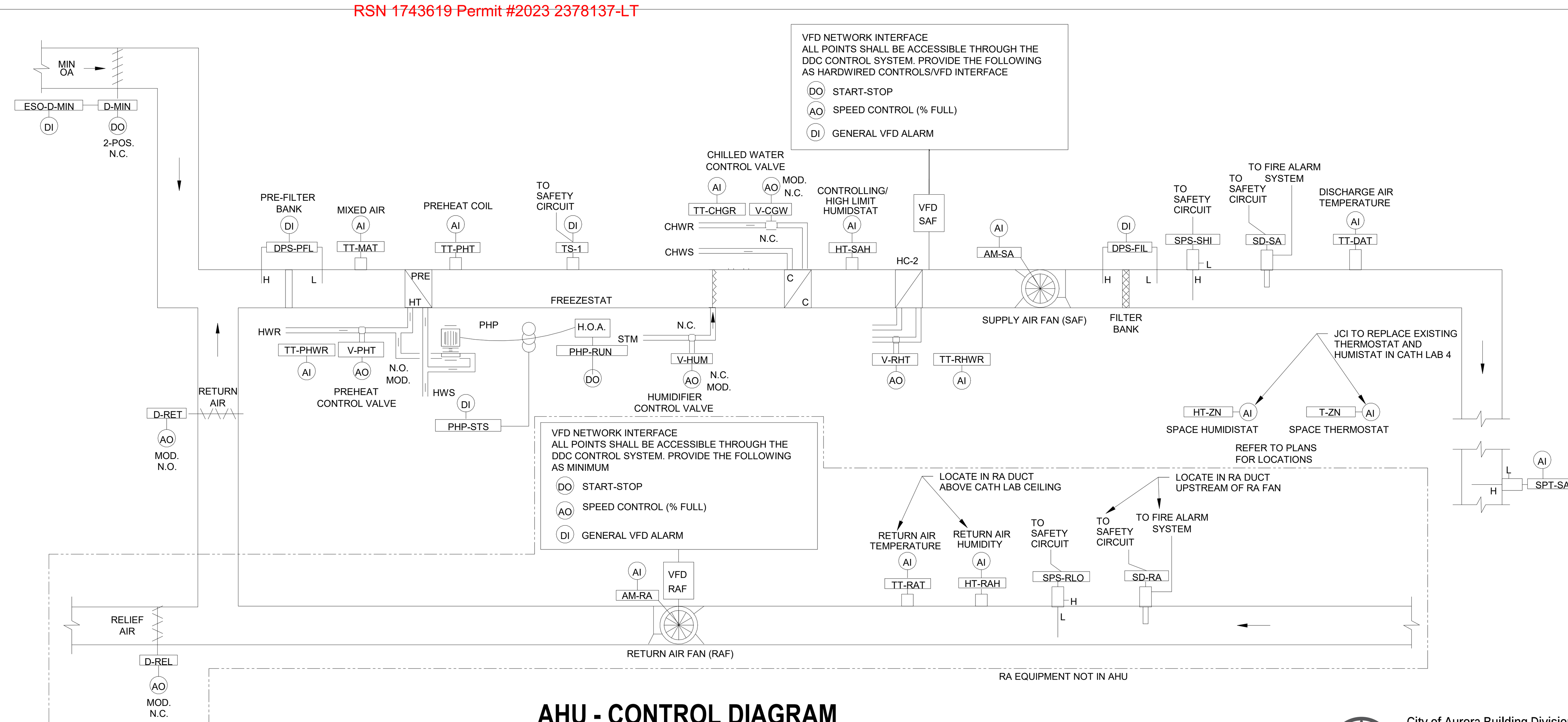

AHU - CONTROL DIAGRAM

City of Aurora Building Division
Reviewed for Code Compliance
Approved as Noted: Kirk Nagle
Date: Sep 08, 2023
2021 INTERNATIONAL CODES & 2023 NEC

DDC INPUT / OUTPUT POINTS LIST

					HARDWARE																																SOFTWARE																								
					OUTPUT										INPUT																						ALARMS					CALCULATED VALUE							PROGRAMS												
					DIGITAL						ANALOG				DIGITAL											ANALOG																																			
POINT DESCRIPTION	DESIGNATION	NOTES	QUANTITY	GRAPHIC DISPLAY	DAMPER OPEN / CLOSE	VALVE OPEN / CLOSE	START / STOP	FORCE ON	FORCE OFF	ENABLE / DISABLE	DAMPER CONTROL	VALVE CONTROL	CONTROL	FIXED PRESET	END SWITCH	RELAY CONTACTS	HAND SWITCH	CURRENT RELAY	PRESSURE SWITCH	DIFFERENTIAL PRESS	FLOW SWITCH	AUX CONTACTS	STATUS	ALARM	FAULT RESET	PRESSURE	DIFFERENTIAL PRESS	FLOW METER	KW	HERTZ REFERENCE	TEMPERATURE (DB)	RELATIVE HUMIDITY	DEW POINT	MEASURE	SPEED / POSITION	PULSE	STATUS FAILURE	HIGHLIMIT	LOW LIMIT	SMOKE	MAINTENANCE	KW	BTUH	CFM	GPM	RUN TIME	INTEGRATOR	GALLONS / TON	AUTO RESTART	CHILLER OPTIMIZATION	COND WATER RESET	DEMAND LIMITING	EVENT PROGRAMS	FAIL MODE (CLOSED)	FAIL MODE (OPEN)	LIGHTING CONTROL	RUN TIME	SCHEDULED START / STOP	LEAD / LAG	SUPPLY AIR RESET	TREND LOGGING
MISC POINTS																																																													
OUTSIDE AIR TEMP	TT-OA	5	1	X																											X																														X
OUTSIDE AIR HUMIDITY	HT-OA	5	1	X																												X																													X
SENSORS																																																												
TEMPERATURE TRANSMITTERS																																																												
SUPPLY TEMP	TT-DAT		1	X																											X							X	X																						X	X
RETURN TEMP	TT-RAT		1	X																											X							X	X																							X
MIXED AIR TEMP	TT-MAT		1	X																											X								X															X								X
PREHEAT DISCH TEMP	TT-PHT		1	X																											X								X															X								X
CHILLED WATER RETURN TEMP	TT-CHWR		1	X																											X							X	X																							X
HEATING WATER RETURN TEMP	TT-PHWR		1	X																											X							X	X																							X
REHEAT WATER RETURN TEMP	TT-RHWR		1	X																											X							X	X																							X
TEMPERATURE SWITCHES																																																											
FREEEZESTAT	TS-FZ		1	X												X																					X																X								
HUMIDISTATS																																																												
RETURN HUMID	HT-RAH		1	X																												X						X	X																							X
HUMIDIFIER DISCH/HI LIMIT	HT-SAH		1	X																												X						X																								X
SPACE HUMIDITY	HT-ZN		1	X																												X						X	X																							X
SUP DUCT STATIC	SPT-SA		1	X																							X											X	X																						X	X
SUP FAN HIGH STATIC	SPS-SHI		1																X																		X																									
SUP FAN LOW STATIC	SPS-SLO		1																X																		X																									
RET FAN HIGH STATIC	SPS-RHI		1																X																		X																									
RET FAN LOW STATIC	SPS-RLO		1																X																		X																									
PRE FILTER DP	DPS-FIL		1	X																X																					X																						
POST FILTER DP	DPS-PFL		1	X																X																					X																						
SUPPLY FAN AIRFLOW	AM-SA		1	X																														X										X																		X
RETURN FAN AIRFLOW	AM-RA		1	X																														X										X																		X
OUTSIDE AIR FLOW	OAF		1	X																																		X	X					X																		X
SUP AIR SMOKE DET	SD-SA	1	1													X																								X													X								
RET AIR SMOKE DET	SD-RA	1	1													X																								X													X								
DAMPERS																																																											
RET AIR DPR O/C	D-RET		1	X							X																																													X						
REL AIR DPR O/C	D-REL		1	X							X																																												X							
ECON O.A. DPR O/C	D-EOA		1	X							X																																																		
SUPPLY SMOKE DAMPER	D-SAS	3,4	1		X																																																								
RETURN SMOKE DAMPER	D-RAS	3,4	1		X																																																								
END SWITCHES	ESO																																																											
MIN O.A. DPR	ESO-D-MIN		1												X																						X																X								
SA SMOKE DAMPER	ESO-D-SAS		1												X																						X																X								
RA SMOKE DAMPER	ESO-D-RAS		1												X																						X																X								
VALVES																																																											
CGW VLV COMMAND	V-CGW		1	X								X																																										X							X
PREHEAT VLV COMMAND	V-PHT		1	X								X																																										X							X
HUMIDIFIER VALVE	V-HUM		1	X								X																																										X							X
REHEAT COIL VALVE	V-RHT		1	X								X																																										X							X
MOTOR/VFD'S																																																											
SUPPLY FAN VFD	VFD-SAF	2	1																																																										
SUP FAN VFD S/S	SF-RUN		1	X			X																																										X								X	X			
SUP FAN VFD SPEED	SF-SPD		1	X									X																																																X
SUP FAN VFD SPEED MON	SF-SPD-PF		1	X																										X																															X
SUP FAN VFD GEN ALRM	SF-ALM		1																					X													X																									
SUP FAN VFD BYP STATUS	SF-BYP		1													X																									X												X								
SUP FAN STATUS	SF-STS		1																				X														X																				X				
RETURN FAN VFD	VFD-RAF	2	1																																																										
RET FAN VFD S/S	RF-RUN		1	X			X																																										X								X	X			
RET FAN VFD SPEED	RF-SPD		1	X									X																																																X
RET FAN VFD SPEED MON	RF-SPD-PF		1	X																										X																															X
RET FAN VFD GEN ALRM	RF-ALM		1																					X													X																									
RET FAN VFD BYP STATUS	RF-BYP		1													X																									X												X								
RET FAN STATUS	RF-STS		1																				X														X																				X				
PREHEAT PUMP																																																											
PREHEAT PUMP S/S	PHP-RUN		1	X			X																																		X																				
PREHEAT PUMP STATUS	PHP-STS		1	X																			X														X																				X				X

1. SMOKE DETECTORS SHALL BE FURNISHED BY F/A CONTR.
2. VFD'S SHALL HAVE NETWORK INTERFACE. ALL POINTS SHALL BE AVAILABLE OVER THE CONTROL SYSTEM. THE FOLLOWING IS A LIST OF MINIMUM SOFTWARE POINTS TO BE SPECIFICALLY AVAILABLE FOR CONTROL AND ALARM.
3. DAMPERS FURNISHED WITH AHU. (NOT REQUIRED FOR AHU 49)
4. DAMPERS TO BE RATED SMOKE DAMPERS
5. REFERENCE FROM EXISITNG BUILDING AUTOMATION SYSTEM

SEQUENCE OF OPERATION

SUPPLY AIR AND RETURN AIR FAN
SUPPLY AIR AND RETURN AIR FANS SHALL BE ENERGIZED/DE-ENERGIZED FROM THE VFD IN HAND POSITION OR THE DDC SYSTEM WHEN IN AUTO MODE. THE DDC CONTROL SYSTEM SHALL SENSE WHEN THE FAN IS IN HAND POSITION BY THE FAN STATUS VERIFICATION AND INITIATE THE AHU CONTROL SEQUENCE.

IN AUTO MODE THE TWO-POSITION MINIMUM OUTSIDE AIR DAMPER (D-MIN) SHALL OPEN. ONCE THE DAMPER IS OPEN, THE SUPPLY FAN SHALL START; THE DDC SYSTEM SHALL SIGNAL THE ASSOCIATED RETURN AND EXHAUST FANS TO START. IF FAN STARTED IN HAND THE TWO POSITION MINIMUM OUTSIDE AIR DAMPER SHALL OPEN IMMEDIATELY UPON SENSING FAN STATUS AS ON.

FANS SHALL SHUT DOWN FROM A SIGNAL FROM:
- THE FIRE ALARM PANEL THRU THE F/A RELAY.
- THE SUPPLY AIR SMOKE DETECTOR(S) (SD-SA)
- THE RETURN AIR SMOKE DETECTOR(S) (SD-RA)
- FREEZE STAT, (TS-FRZ).
- THE HIGH/LOW LIMIT STATIC PRESSURE SWITCHES (SPS-SHI & RLO).

WHEN THE SUPPLY FAN SHUTS DOWN THE FOLLOWING SHALL OCCUR:
- THE MINIMUM OUTSIDE AIR DAMPER (D-MIN) SHALL CLOSE.
- THE ECONOMIZER OUTSIDE AIR DAMPER (D-EOA) SHALL CLOSE.
- THE RELIEF DAMPER (D-REL) SHALL CLOSE.
- THE RETURN DAMPER (D-RET) SHALL OPEN
- THE CHILLED WATER VALVE (V-CHW) SHALL CLOSE
- THE PREHEAT COIL (V-HTG) SHALL REMAIN UNDER CONTROL OF THE PREHEAT DISCHARGE TEMPERATURE SENSOR (TT-PHT).
- THE RETURN FAN AND THE ASSOCIATED EXHAUST FANS SHALL SHUTDOWN.

SUPPLY FAN SPEED CONTROL
THE SUPPLY FAN SPEED SHALL BE CONTROLLED BY THE VARIABLE FREQUENCY DRIVE (VFD) TO MAINTAIN A CONSTANT VOLUME OF AIR (VFD SPEED TO BE VERIFIED BY THE T.A.B. CONTRACTOR). THE VFD SHALL OUTPUT THE % FULL SPEED TO THE DDC SYSTEM BY THE NETWORK INTERFACE.

SPS-SHI SHALL SHUTDOWN THE FANS WHENEVER IT SENSES A HIGH STATIC PRESSURE, ALARM THE DDC SYSTEM AND REQUIRE A LOCAL MANUAL RESET TO RESTART THE FAN. SPS-RLO SHALL SHUTDOWN THE FANS WHENEVER IT SENSES A LOW STATIC PRESSURE AND ALARM THE DDC SYSTEM AND REQUIRE A LOCAL MANUAL RESET TO RESTART THE FAN

VOLUMETRIC TRACKING
THE RETURN AIR FAN VFD SHALL BE CONTROLLED FROM AN OUTSIDE AIR QUANTITY SOFTWARE SETPOINT (SCHEDULED OUTSIDE AIR QUANTITY, ADJUSTABLE) USING AIRFLOW MEASURING DEVICES AND TRANSMITTERS AM-SA AND AM-RA INSTALLED AT THE INLET OF THE SUPPLY AND RETURN FANS. AM-SA SHALL MEASURE THE TOTAL AIRFLOW OF THE SUPPLY FAN AND AM-RA SHALL MEASURE THE TOTAL AIRFLOW OF THE RETURN FAN. THE AIRFLOW MEASURING TRANSMITTERS SHALL OUTPUT THE TOTAL CFM READING TO THE DDC SYSTEM. THE DDC SYSTEM SHALL CALCULATE THE DIFFERENCE OF THE TOTAL SUPPLY AIR AND THE TOTAL RETURN AIR TO MAKE AN OUTSIDE AIR QUANTITY SOFTWARE POINT. THE DDC SYSTEM SHALL MODULATE THE SPEED OF THE RETURN AIR FAN VFD TO MAINTAIN THE CALCULATED OUTSIDE AIR QUANTITY WITHIN 2% OF THE OUTSIDE AIR QUANTITY SETPOINT.

AIR HANDLER OPERATING STATES
THE AIR HANDLING UNIT SHALL OPERATE IN FOUR DISTINCT STATES. CRITERIA TO TRANSITION BETWEEN STATES ARE INDICATED BELOW. TO TRANSITION BETWEEN STATES THE CRITERIA SHALL BE MEET FOR AN ADJUSTABLE MINIMUM PERIOD OF TIME REFERRED TO AS "TRANSITION TIME".

THE DISCHARGE AIR TEMPERATURE SENSOR, TT-DAT, SET POINT SHALL BE SET BY SPACE THERMOSTAT, TT-ZN, AS NEEDED TO MAINTAIN THE SPACE TEMPERATURE (68°F, ADJ.)

STATE 1 - FULL COOLING COIL
ECONOMIZER OUTSIDE AIR DAMPERS SHALL BE CLOSED. THE COOLING COIL CONTROL VALVE, V-CHW, SHALL BE CONTROLLED BY A CONTROL LOOP WITH THE DISCHARGE TEMPERATURE TRANSMITTER, TT-DAT, AS THE INPUT, AND A SETPOINT EQUAL TO THE DISCHARGE AIR SETPOINT OF (55 F, ADJUSTABLE). ON A RISE IN TEMPERATURE ABOVE TT-DAT SETPOINT, THE VALVE SHALL MODULATE OPEN. ON A FALL IN TEMPERATURE BELOW TT-DAT SETPOINT, THE VALVE SHALL MODULATE CLOSED. TT-DAT SHALL ALARM THE DDC SYSTEM WHENEVER THE DISCHARGE TEMPERATURE IS TOO HIGH OR LOW. THE COOLING COIL CONTROL LOOP SHALL CONTROL THE LEAVING AIR TEMPERATURE WITHIN +/- 0.5 DEGREE F.

TRANSITION FROM STATE 1 TO STATE 2:
THERE SHALL BE AN ADJUSTABLE OUTSIDE AIR ECONOMIZER ENABLE TEMPERATURE (65 DEGREES F) AND AN ADJUSTABLE DEAD BAND (2 DEGREES F). THE UNIT SHALL TRANSITION FROM STATE 1 TO STATE 2 WHENEVER THE OUTSIDE AIR TEMPERATURE IS BELOW THE ECONOMIZER ENABLE TEMPERATURE LESS THE DEAD BAND (65-2=63) FOR AN ADJUSTABLE TRANSITION TIME (20 MINUTES).

TRANSITION FROM STATE 2 TO STATE 1:
THE UNIT SHALL TRANSITION FROM STATE 2 TO STATE 1 WHENEVER THE OUTSIDE AIR TEMPERATURE IS ABOVE THE ECONOMIZER ENABLE TEMPERATURE PLUS THE DEAD BAND (65+2=67) FOR AN ADJUSTABLE TRANSITION TIME (20 MINUTES).

STATE 2 - FULL ECONOMIZER WITH COOLING COIL
ECONOMIZER OUTSIDE AIR DAMPERS SHALL BE FULLY OPEN. THE COOLING COIL CONTROL VALVE, V-CHW, SHALL BE CONTROLLED BY A CONTROL LOOP WITH THE DISCHARGE TEMPERATURE TRANSMITTER, TT-DAT, AS THE INPUT, AND A SETPOINT EQUAL TO THE DISCHARGE AIR SETPOINT OF (55 F, ADJUSTABLE.).

TRANSITION FROM STATE 2 TO STATE 3:
THE UNIT SHALL TRANSITION FROM STATE 2 TO STATE 3 WHENEVER THE COOLING COIL CONTROL LOOP HAS AN OUTPUT OF 0% OPEN FOR AN ADJUSTABLE TRANSITION TIME (10 MINUTES).

TRANSITION FROM STATE 3 TO STATE 2:
THE UNIT SHALL TRANSITION FROM STATE 3 TO STATE 2 WHENEVER THE ECONOMIZER DAMPER CONTROL LOOP HAS AN OUTPUT OF 100% OPEN FOR AN ADJUSTABLE TRANSITION TIME (10 MINUTES).

STATE 3 - FREE COOLING:
THE COOLING COIL VALVE SHALL CLOSE AND THE ECONOMIZER AIR DAMPER (D-EOA), RELIEF AIR DAMPER (D-REL), AND THE RETURN AIR DAMPER (D-RET) SHALL MODULATE TO MAINTAIN THE DISCHARGE AIR TEMPERATURE AT THE DISCHARGE AIR TEMPERATURE SETPOINT. THE DAMPERS SHALL BE CONTROLLED BY SELECTING THE MINIMUM OUTPUT OF A DISCHARGE TEMPERATURE CONTROL LOOP AND A LOW LIMIT CONTROL LOOP.

THE DISCHARGE AIR TEMPERATURE CONTROL LOOP SHALL HAVE THE UNIT DISCHARGE AIR TEMPERATURE TRANSMITTER (TT-DAT) AS THE INPUT AND A SETPOINT EQUAL TO THE COOLING COIL SETPOINT (55). ON A RISE IN DISCHARGE AIR TEMPERATURE THE ECONOMIZER OUTSIDE AIR AND RELIEF AIR DAMPERS SHALL MODULATE OPEN AND THE RETURN AIR DAMPER SHALL MODULATE CLOSED. ON A FALL IN DISCHARGE AIR TEMPERATURE THE ECONOMIZER OUTSIDE AIR DAMPER AND RELIEF AIR DAMPER SHALL MODULATE CLOSED AND THE RETURN AIR DAMPER SHALL MODULATE OPEN. DAMPERS SHALL MAINTAIN DAT TO WITHIN +/- ½ DF OF SETPOINT.

THE MIXED AIR LOW LIMIT CONTROL LOOP SHALL HAVE THE MIXED AIR TEMPERATURE AS SENSED BY TT-MAT AS INPUT AND A SETPOINT OF THE DISCHARGE AIR TEMPERATURE CONTROL LOOP MINUS 6 DEGREES (ADJ.) (55 - 6 = 49) ON A RISE IN MIXED AIR TEMPERATURE ABOVE TT-MAT SETPOINT, TT-MAT SHALL, THROUGH THE DDC SYSTEM, MODULATE OPEN THE ECONOMIZER AIR DAMPER (D-EOA) AND RELIEF AIR DAMPER (D-REL) AND MODULATE CLOSED THE RETURN AIR DAMPER (D-RET). ON A FALL IN MIXED AIR TEMPERATURE AS SENSED BY TT-MAT, TT-MAT SHALL, THROUGH THE DDC SYSTEM, MODULATE CLOSED THE ECONOMIZER OUTSIDE AIR DAMPER (D-EOA) AND RELIEF AIR DAMPER (D-REL) AND MODULATE OPEN THE RETURN AIR DAMPER (D-RET) TO MAINTAIN TT-MAT'S SETPOINT.

BOTH THE DISCHARGE AIR TEMPERATURE CONTROL LOOP AND LOW LIMIT CONTROL LOOP SHALL BE PROPORTIONAL INTEGRAL. (PROPORTIONAL ONLY OR LINEAR ONLY IS NOT ACCEPTABLE) TT-MAT SHALL OVERRIDE ALL OTHER CONTROLS EXCEPT HARDWIRED SAFETY DEVICES.

IF THE MIXED AIR TEMPERATURE TRANSMITTER, TT-MAT, FALLS MORE THAN 10 DEGREES (ADJ.) BELOW SUPPLY SETPOINT (55-10=45), THE FOLLOWING SHALL OCCUR:
- AN ALARM SHALL BE ISSUED TO THE OPERATOR.
- STATE 2 AND STATE 3 SHALL BE DE-ACTIVATED REQUIRING AN OPERATOR RESET AT THE WORK STATION.
- THE ECONOMIZER DAMPER (D-EOA) SHALL CLOSE
- THE MINIMUM OUTSIDE AIR DAMPER (D-MIN) SHALL REMAIN OPEN,
- THE RELIEF DAMPERS (D-REL) SHALL BE CLOSED
- THE RETURN DAMPERS (D-RET) SHALL BE OPEN
- THE CHILLED WATER VALVE (V-CHW) SHALL BE FULLY OPENED
- THE CHILLED WATER PUMPS SHALL BE COMMANDED "ON"

TRANSITION FROM STATE 3 TO STATE 4:
THE UNIT SHALL TRANSITION FROM STATE 3 TO STATE 4 WHENEVER THE ECONOMIZER DAMPER CONTROL LOOP HAS AN OUTPUT OF 0% OPEN FOR AN ADJUSTABLE TRANSITION TIME (10 MINUTES).

TRANSITION FROM STATE 4 TO STATE 3:
THE UNIT SHALL TRANSITION FROM STATE 3 TO STATE 2 WHENEVER THE PREHEAT VALVE CONTROL LOOP HAS AN OUTPUT OF 0% OPEN FOR AN ADJUSTABLE TRANSITION TIME (10 MINUTES).

STATE 4 - PREHEAT:
WHEN THE UNIT IS IN STATE 4 THE PREHEAT HOT WATER VALVE, V-HTG, SHALL BE CONTROLLED BY A SELECTING THE MAXIMUM OUTPUT OF THE PREHEAT MINIMUM TEMPERATURE CONTROL LOOP (AS DESCRIBED BELOW) AND THE DISCHARGE AIR TEMPERATURE CONTROL LOOP. THE DISCHARGE AIR TEMPERATURE CONTROL LOOP SHALL HAVE THE UNIT DISCHARGE AIR TEMPERATURE TRANSMITTER (TT-DAT) AS INPUT AND A SETPOINT OF THE DISCHARGE AIR SETPOINT (55 DEGREES F).

PRE-HEAT COIL MINIMUM DISCHARGE TEMP
PRE-HEAT COIL CONTROL VALVE, V-HTG, SHALL BE CONTROLLED AT ALL TIMES, INCLUDING WHEN THE UNIT IS DE-ENERGIZED, TO MAINTAIN A MINIMUM PREHEAT COIL DISCHARGE TEMPERATURE. A CONTROL LOOP WITH THE PREHEAT COIL DISCHARGE TEMPERATURE TRANSMITTER, TT-PHT, AS INPUT, AND A SETPOINT OF 40 F (ADJ.).

PRE-HEAT PUMP
THE PRE-HEAT PUMP SHALL BE ENERGIZED WHENEVER THE OUTSIDE AIR TEMPERATURE FALLS BELOW 40 DEGREES F (ADJ.) AND SHALL DE-ENERGIZE WHENEVER THE OUTSIDE TEMPERATURE RISES ABOVE 45 DEGREES F. (ADJ.)

FREEZESTAT
WHENEVER FREEZESTAT, TS-FZ, SENSES A TEMPERATURE BELOW 36 DEGREES F (ADJ.), IT SHALL PERFORM THE FOLLOWING:
- THE RETURN FAN AND THE ASSOCIATED EXHAUST FANS SHALL SHUTDOWN.
- START PRE-HEAT RE-CIRCULATING PUMP
- THE MINIMUM OUTSIDE AIR DAMPER (D-MIN) SHALL CLOSE.

STATE 5 DE-HUMID CONTROL
THE UNIT SHALL TRANSITION TO DE-HUMIDIFICATION MODE WHEN THE RETURN AIR HUIMIDISTAT IS ABOVE THE SET POINT (50%RH) FOR MORE THAN 20 MINUTES. ECONOMIZER OUTSIDE AIR DAMPERS WILL BE CLOSED. THE 35 DEGREE F- 30% GLYCOL CHILLER WILL BE ENABELED AND THE COOLING COIL SET POINT WILL BE RE-SET TO 42.8 F. THE REHEAT COIL CONTROL WILL BE ENABELED TO MEET DISCHARGE AIR SET POINT TO MAINTAIN SPACE TEMPERATURE.

REHEAT COIL
THE REHEAT COIL CONTROL LOOP WILL BE ENABELED WHEN DE-HUMIDIFCATION STATE 5 IS OPERATING TO CONTROL THE REHEAT HOT WATER VALVE, V-RHT, TO MEET THE SET POINT OF THE DISCHARGE AIR TO MAINTAIN SPACE TEMPERATURE (65 DEGREES F).

Salas O'Brien
salasobrien.com
Dublin
2751 Tuller Pkwy
Dublin, OH 43017
Registration:

CONFIDENTIAL
THIS DRAWING AND ASSOCIATED DESIGN ELEMENTS ARE CONFIDENTIAL AND THE PROPERTY OF SALAS O'BRIEN, WHICH RETAINS ALL COMMON LAW, COPYRIGHT, STATUTORY AND OTHER RIGHTS THERETO. ANY UNAUTHORIZED USE, REUSE OR REPRODUCTION IS PROHIBITED. UNLESS OTHERWISE AGREED TO BY SALAS O'BRIEN, THIS DRAWING (AS WELL AS ANY COPIES) SHALL BE RETURNED TO SALAS O'BRIEN UPON REQUEST.

PROFESSIONAL SEAL

COLORADO LICENSED MICHAEL P THOMPSON 53150 PROFESSIONAL ENGINEER
8/14/2023

ISSUE DATE	DESCRIPTION
08/01/2023	100% CD

2023-00034-00
HEALTHTRUST FACILITIGROUP

TMCA CATH LAB HVAC DEHUMIDIFICATION

1501 S. POTOMAC ST,
AURORA, CO 80012

REVISIONS

Δ	DESCRIPTION	DATE
0	ISSUED FOR CONSTRUCTION	08/01/23

CHECKED BY	DRAWN BY
EBM	KDR

SHEET NAME

MECHANICAL AHU - CONTROL DIAGRAM AND SEQUENCE OF OPERATION

SHEET NUMBER	REVISION
M-101	0

Autodesk Docs://080-2023-0034 TMCA Cathlab Dehumidification Upgrades/2023-00034 TMCA Cathlab-Mech_R22_R2.rvt
8/1/2023 11:40:28 AM

RSN 1743619 Permit #2023 2378137-LT

MECHANICAL PARTIAL FIRST FLOOR DEMOLITION PLAN

SCALE: 3/16" = 1'-0"

MECHANICAL DEMOLITION KEYNOTES

1. REMOVE FAN FILTER DIFFUSER UNIT. ONLY REMOVE DUCT NECESSARY FOR NEW DIFFUSER INSTALLATION.
2. CAP (E)OA DUCT AT BRANCH AND SEAL.
3. REMOVE AHU-4 LOCATED ABOVE CEILING.
4. REMOVE ONE (1)DX UNIT OUTSIDE OF BUILDING AND CONNECTING REFRIGERANT PIPING, PIPING SUPPORTS AND INSULATION.

GENERAL NOTES

1. CONTRACTOR TO FIELD VERIFY ALL EQUIPMENT AND DUCTWORK TO BE REMOVED AND OBTAIN OWNER'S REPRESENTATIVE APPROVAL BEFORE STARTING DEMOLITION.
2. DEMOLITION OF AIR HANDLER UNIT WILL REQUIRE THE REMOVAL AND REPLACEMENT OF CEILING TILES AND CEILING TILE SUPPORT RAILS. CONTRACTOR SHALL REPLACE CEILING TILES AND SUPPORT RAILS TO MATCH AND COMPLETE CEILING.
3. DEMOLITION AND REMOVAL OF POWERED HEPA DIFFUSER UNITS WILL REQUIRE THE REMOVAL OF GYPSUM CEILING. CONTRACTOR SHALL REPLACE GYPSUM CEILING, SPACKLE JOINTS AND PAINT CEILING. COORDINATE WITH FACILITY REPRESENTATIVE FOR PAINT TYPE AND COLOR.

This sheet of drawings has not been reviewed for code compliance.

Salas O'Brien
salasobrien.com
Dublin
2751 Tuller Pkwy
Dublin, OH 43017
Registration:

CONFIDENTIAL
THIS DRAWING AND ASSOCIATED DESIGN ELEMENTS ARE CONFIDENTIAL AND THE PROPERTY OF SALAS O'BRIEN, WHICH RETAINS ALL COMMON LAW, COPYRIGHT, STATUTORY AND OTHER RIGHTS THERETO. ANY REPRODUCTION, PUBLICATION OR DISTRIBUTION IS PROHIBITED, UNLESS OTHERWISE AGREED TO BY SALAS O'BRIEN. THIS DRAWING (AS WELL AS ANY COPIES) SHALL BE RETURNED TO SALAS O'BRIEN UPON REQUEST.

PROFESSIONAL SEAL

COLORADO LICENSED MICHAEL P THOMPSON 52150 PROFESSIONAL ENGINEER

8/14/2023

ISSUE DATE	DESCRIPTION
08/01/2023	100% CD

2023-00034-00
HEALTHTRUST FACILITIGROUP

TMCA CATH LAB HVAC DEHUMIDIFICATION

1501 S. POTOMAC ST,
AURORA, CO 80012

REVISIONS

Δ	DESCRIPTION	DATE
0	ISSUED FOR CONSTRUCTION	08/01/23

CHECKED BY EBM
DRAWN BY KDR

SHEET NAME

MECHANICAL PARTIAL FIRST FLOOR DEMOLITION PLAN

SHEET NUMBER MD-102
REVISION 0

Autodesk Docs://080-2023-0034 TMCA Cathlab Dehumidification Upgrades/2023-00034 TMCA Cathlab-Mech_R22_R2.rvt
8/1/2023 12:12:38 PM

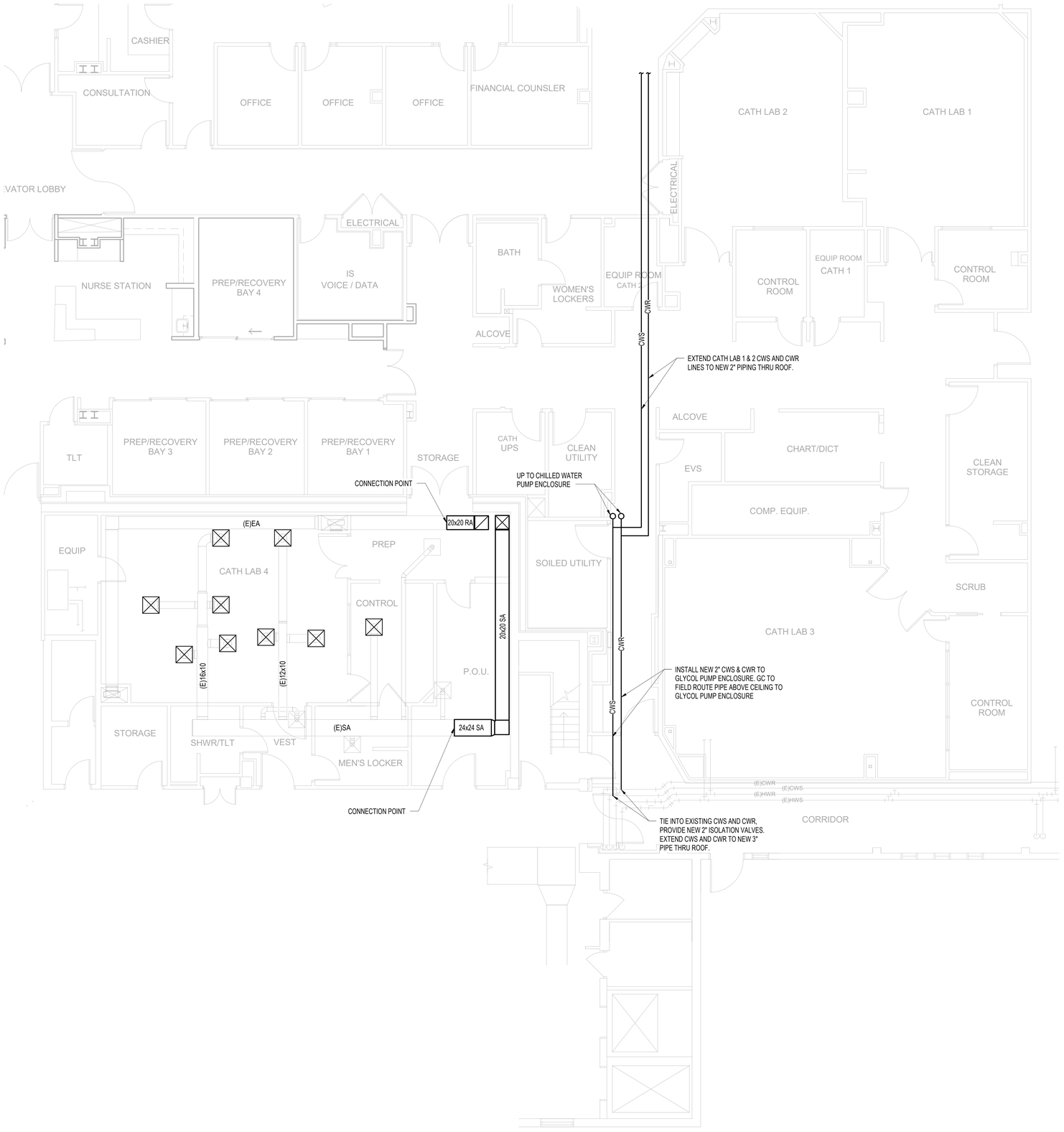

MECHANICAL PARTIAL FIRST FLOOR HVAC & PIPING PLAN

SCALE: 3/16" = 1'-0"

MECHANICAL NOTES

1. PROVIDE NEW DIFFUSER, INSULATED FLEXIBLE DUCT AND SUPPORT HARDWARE AT EXISTING HEPA FILTER WITH BOOSTER FAN LOCATIONS. DIFFUSERS TO MATCH EXISTING DIFFUSERS IN CATH LAB 4 AREA.
2. INSULATE AND HEAT TRACE CHILLED WATER LINES EXPOSED ABOVE THE ROOF AND EXTERIOR TO PUMP ENCLOSURE.
3. CONTRACTOR TO ROUTE NEW 3" CWS & CWR ABOVE CEILING AND PROVIDE PIPE SUPPORTS FROM EXISTING STRUCTURAL STEEL.

City of Aurora Building Division
Reviewed for Code Compliance
Approved as Noted: Kirk Nagle
Date: Sep 08, 2023
2021 INTERNATIONAL CODES & 2023 NEC

Salas O'Brien

salasobrien.com

Dublin
2751 Tuller Pkwy
Dublin, OH 43017

Registration:

CONFIDENTIAL
THIS DRAWING AND ASSOCIATED DESIGN ELEMENTS ARE CONFIDENTIAL AND THE PROPERTY OF SALAS O'BRIEN, WHICH RETAINS ALL COMMON LAW, COPYRIGHT, STATUTORY AND OTHER RIGHTS THERETO. ANY UNAUTHORIZED USE, REUSE OR REPRODUCTION IS PROHIBITED. UNLESS OTHERWISE AGREED TO BY SALAS O'BRIEN, THIS DRAWING (AS WELL AS ANY COPIES) SHALL BE RETURNED TO SALAS O'BRIEN UPON REQUEST.

PROFESSIONAL SEAL

COLORADO LICENSED PROFESSIONAL ENGINEER MICHEL P THOMPSON 53150
8/14/2023

ISSUE DATE	DESCRIPTION
08/01/2023	100% CD

2023-00034-00
HEALTHTRUST FACILITIGROUP

TMCA CATH LAB HVAC DEHUMIDIFICATION

1501 S. POTOMAC ST,
AURORA, CO 80012

REVISIONS

Δ	DESCRIPTION	DATE
0	ISSUED FOR CONSTRUCTION	08/01/23

CHECKED BY	DRAWN BY
EBM	KDR

SHEET NAME

MECHANICAL PARTIAL FIRST FLOOR HVAC & PIPING PLAN

SHEET NUMBER	REVISION
M-102	0

Autodesk Docs://080-2023-0034 TMCA Cathlab Dehumidification Upgrades/2023-00034 TMCA Cathlab-Mech_R22_R2.rvt
8/1/2023 11:40:28 AM

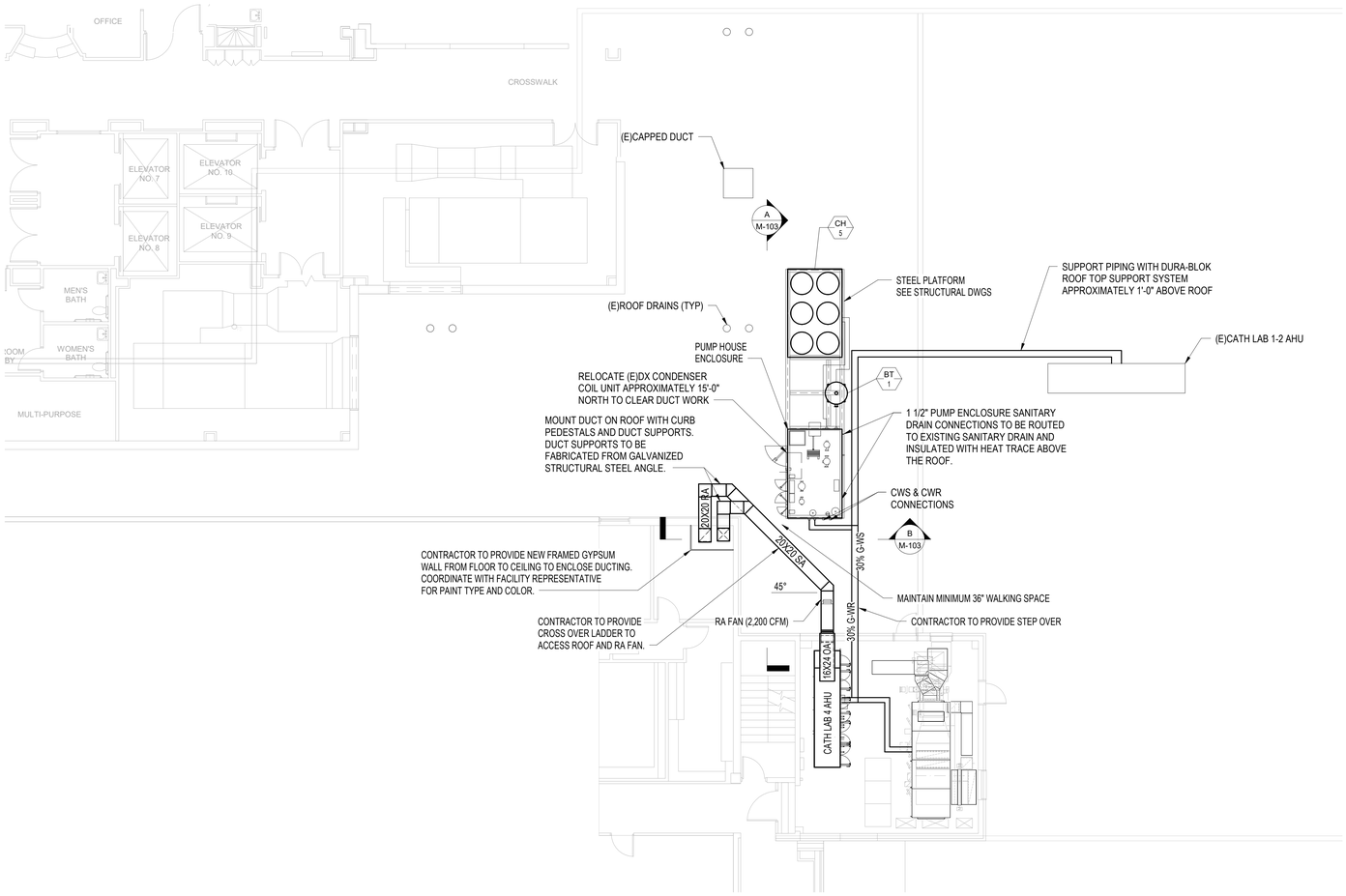

N

MECHANICAL PARTIAL SECOND FLOOR ROOF PLAN
SCALE: 1/8" = 1'-0"

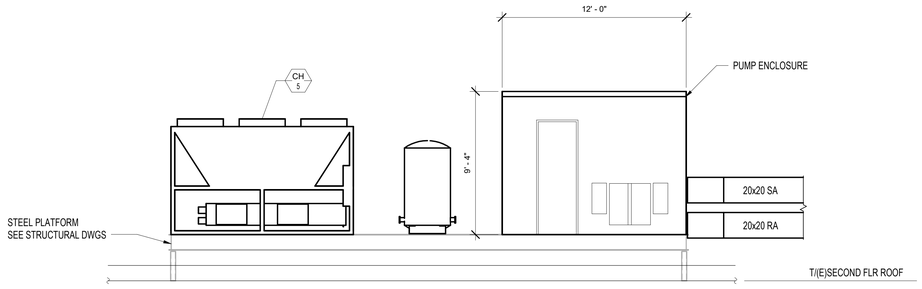

SECTION A
SCALE: 1/4" = 1'-0"

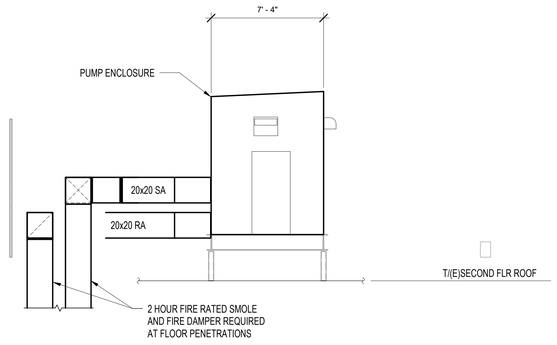

SECTION B
SCALE: 1/4" = 1'-0"

City of Aurora Building Division
Reviewed for Code Compliance
Approved as Noted: Kirk Nagle
Date: Sep 08, 2023
2021 INTERNATIONAL CODES & 2023 NEC

Salas O'Brien
salasobrien.com
Dublin
2751 Tuller Pkwy
Dublin, OH 43017
Registration:

CONFIDENTIAL
THIS DRAWING AND ASSOCIATED DESIGN ELEMENTS ARE CONFIDENTIAL AND THE PROPERTY OF SALAS O'BRIEN, WHICH RETAINS ALL COMMON LAW, COPYRIGHT, STATUTORY AND OTHER RIGHTS THERETO. COPYING, USE OR DISCLOSURE WITHOUT WRITTEN PERMISSION IS PROHIBITED, UNLESS OTHERWISE AGREED TO BY SALAS O'BRIEN, THIS DRAWING (AS WELL AS ANY COPIES) SHALL BE RETURNED TO SALAS O'BRIEN UPON REQUEST.

PROFESSIONAL SEAL

COLORADO LICENSED
RACHEL P THOMPSON
50150
PROFESSIONAL ENGINEER
8/14/2023

ISSUE DATE	DESCRIPTION
08/01/2023	100% CD

2023-00034-00
HEALTHTRUST FACILITIGROUP

TMCA CATH LAB HVAC DEHUMIDIFICATION

1501 S. POTOMAC ST,
AURORA, CO 80012

REVISIONS

Δ	DESCRIPTION	DATE
0	ISSUED FOR CONSTRUCTION	08/01/23

CHECKED BY	DRAWN BY
EBM	KDR

SHEET NAME

MECHANICAL PARTIAL SECOND FLOOR ROOF PLAN

SHEET NUMBER	REVISION
M-103	0

Autodesk Docs://080-2023-0034 TMCA Cathlab Dehumidification Upgrades/2023-00034 TMCA Cathlab-Mech_R22_R2.rvt
8/1/2023 11:40:30 AM

RSN 1743619 Permit #2023 2378137-LT

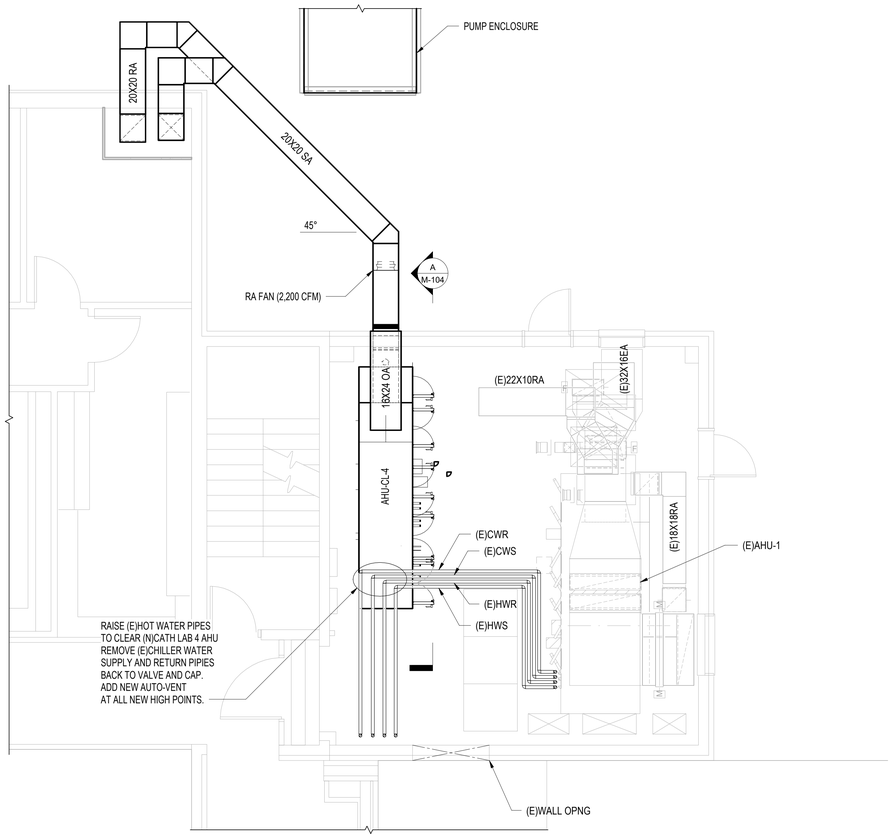

MECHANICAL SECOND FLOOR PENTHOUSE PARTIAL PLAN
SCALE: 1/4" = 1'-0"

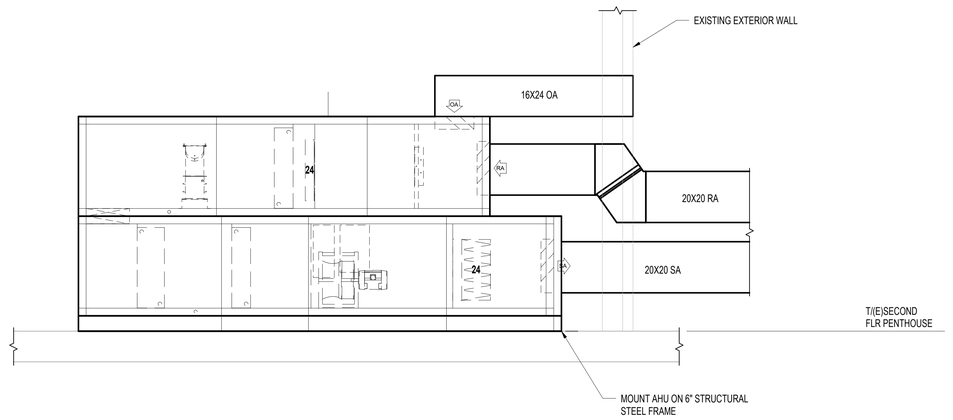

SECTION A
SCALE: 1/2" = 1'-0"

City of Aurora Building Division
Reviewed for Code Compliance
Approved as Noted: Kirk Nagle
Date: Sep 08, 2023
2021 INTERNATIONAL CODES & 2023 NEC

Salas O'Brien
salasobrien.com
Dublin
2751 Tuller Pkwy
Dublin, OH 43017
Registration:

CONFIDENTIAL
THIS DRAWING AND ASSOCIATED DESIGN ELEMENTS ARE CONFIDENTIAL AND THE PROPERTY OF SALAS O'BRIEN, WHICH RETAINS ALL COMMON LAW, COPYRIGHT, STATUTORY AND OTHER RIGHTS THERETO. UNAUTHORIZED USE, REPRODUCTION OR DISTRIBUTION IS PROHIBITED, UNLESS OTHERWISE AGREED TO BY SALAS O'BRIEN, THIS DRAWING (AS WELL AS ANY COPIES) SHALL BE RETURNED TO SALAS O'BRIEN UPON REQUEST.

PROFESSIONAL SEAL

COLORADO LICENSED
MICHAEL P THOMPSON
50150
PROFESSIONAL ENGINEER
8/14/2023

ISSUE DATE	DESCRIPTION
08/01/2023	100% CD

2023-00034-00
HEALTHTRUST
FACILITIGROUP

TMCA CATH LAB HVAC DEHUMIDIFICATION

1501 S. POTOMAC ST,
AURORA, CO 80012

REVISIONS

Δ	DESCRIPTION	DATE
0	ISSUED FOR CONSTRUCTION	08/01/23

CHECKED BY EBM
DRAWN BY KDR

SHEET NAME

MECHANICAL SECOND FLOOR PENTHOUSE PARTIAL PLAN

SHEET NUMBER M-104
REVISION 0

Autodesk Docs://050-2023-0034 TMCA Cathlab Dehumidification Upgrades/2023-00034 TMCA Cathlab-Mech_R22_R2.rvt
8/1/2023 11:40:31 AM

RSN 1743619 Permit #2023 2378137-LT

AIR HANDLING UNIT SCHEDULE

SYMBOL	AHU-CL-4	
SERVICE	CATH LAB 4	
SUPPLY FAN		
CFM	2,200	
MINIMUM CFM	TBD	
EXTERNAL STATIC PRESSURE	1.50	
TYPE	BLOW THRU	
FAN RPM	3,358	
BHP	2.62	
MHP	5	
DISCONNECT BY	MFG	
DISCONNECT TYPE	F	
CONTROLLER/STARTER BY	MFG	
CONTROLLER/STARTER TYPE	VFD	
MINIMUM OUTSIDE AIR CFM		
VOLT- PHASE	460/3/60	
HEATING COIL - HOT WATER	HC-1	HC-2
EAT °F	20	42
LAT °F	83.5	92.2
EWT °F	140	140
LWT °F	110	110
GPM	9.3	7.0
MBH	137.0	104.0
MAX. A.P.D. IN. W.C.	0.06	0.06
W.P.D. FEET HEAD	2.7	1.6
COOLING COIL (1 COIL WITH TWO EWT'S)	45FCW TO 48F GLYCOL	30% 34F GLYCOL
EAT °F DB	80	66.3
EAT °F WB	67	57.3
MAX. LAT °F DB	50.8	43
LAT °F WB	51	42.8
EWT °F	48	34
LWT °F	54.76	39.6
GPM	19	28
SENSIBLE MBH	43.3	47
TOTAL MBH	61.1	74.0
MAX. A.P.D. IN. W.C.	0.16	0.33
W.P.D. FEET HEAD	7.6	16.3
FILTER		
TYPE	STEAM	
ENTERING AIR TEMP. (EAT)	55	
LEAVING RH(%)	50	
ABSORBANCE DISTANCE (IN)	8	
RESISTIVE GENERATOR CAPACITY (LBS/HR)	45	
HUIMIDIFIER		
TYPE - PRE	MERV11	
PRE-FILTER MAX. PRESSURE DROP (IN. WC.) - CLEAN/DIRTY	TBD	
TYPE - FINAL	MERV14	
FINAL-FILTER MAX. PRESSURE DROP (IN. WC.) - CLEAN/DIRTY	TBD	
VELOCITY PRE/FINAL (FPM)	TBD	
VIBRATION ISOLATION		
TYPE	2" SPRING	
DEFLECTION	TBD	
MANUFACTURER	YORK	
MODEL NUMBER	XTI-39 X 42	
REMARKS	DOUBLE STACK	

NOTES:
1. CONTRACTOR TO DISASSEMBLE OWNER PROVIDED AHU TO SECTIONS SMALL ENOUGH TO INSTALL INTO MECHANICAL PENTHOUSE AND REASSEMBLE.
2. CONTRACTOR TO INSTALL RESISITIVE ELEMENT STEAM GENERATOR, DRAIN COOLER, AND AIR PROVIDING SWITCH.

CHILLER SCHEDULE (AIR COOLED)

TAG	SERVES	REFRIGERANT	AMBIENT TEMP. (°F)	MIN. OPERATING AMBIENT (°F)	CAPACITY (PERFORMANCE BASED ON GLYCOL 30% SCHEDULED)		CONDENSER TYPE	COMPRESSOR TYPE	NUMBER OF COMPRESSORS	INDEPENDENT REFRIGERANT CIRCUITS	EVAPORATOR PERFORMANCE							MAXIMUM SOUND POWER (dBA)	ELECTRICAL (SINGLE-POINT POWER CONNECTION)									MANUFACTURER	MODEL	NOTES
					TONS	STAGES OF UNLOADING					EWT (°F)	LWT (°F)	MINIMUM REQ'D. GPM	DESIGN GPM	FLUID	MAX PRESSURE DROP (FT. W.G.)	FOULING FACTOR (ft2 h °F/Btu x 10000)		VOLT	PHASE	MCA	MOCP	SCCR (AMPS)	DISCONNECT BY	DISCONNECT TYPE	CONTROLLER/STARTER BY	CONTROLLER/STARTER TYPE			
CH-5	CATH LAB 1-4	R454B	95	TBD	78	TBD	AIR COOLED	SCROLL-HERMETIC	5	2	41	34	277.5	400	30% GLYCOL - WATER	28.4	0.000100	93	460	3	229.0	250	TBD	MFR	NF	MFR	FV	YORK	YLAA101HJ46XF	1 - 10

NOTES:
1. UNIT SHALL BE EQUIPPED WITH LOW-SOUND PACKAGE.
2. FREEZE PROTECTION.
3. SUCTION SERVICE VALVES.
4. MICRO-CHANNEL CONDENSER FINS.
5. UNIT MOUNTED CONTROLLER WITH DISPLAY AND BACnet COMMUNICATIONS.
6. FLOW SWITCH FURNISHED BY UNIT MANUFACTURER AND INSTALLED BY M.C.
7. VARIABLE CONDENSER FANS (6 TOTAL).
8. COMPRESSORS SHALL BE PROVIDED WITH SOUND BLANKETS.
9. PROVIDE NEOPRENE VIBRATION ISOLATORS.
10. PROVIDE CONTROL POWER TRANSFORMER.
11. CONTRACTOR TO RECEIVE OWNER PROVIDED CHILLER, STORE AND PROTECT IF NECESSARY TO MEET INSTALLATION SCHEDULE, INSTALL SEISMIC ISOLATORS, AND INSTALL ANY SHIPPED LOOSE CONNECTIONS.

PUMP ENCLOSURE EQUIPMENT

PUMP SCHEDULE

TAG	BD	PUMP TYPE	DESIGN FLOW (GPM)	DESIGN HEAD (FT. HD)	PUMP EFFICIENCY (%)	MOTOR			ELECTRICAL						PUMP SIZE (IN.)		IMPELLER SIZE (IN.)	WEIGHT (LBS)	FRAME SIZE	MANUFACTURER	MODEL	NOTES
						BHP	HP	RPM	VOLT	PHASE	FREQUENCY (HZ)	DISCONNECT		CONTROLLER/STARTER		SUCTION	DISCHARGE					
												BY	TYPE	BY	TYPE								
P-1	35F GLYCOL LOOP	SPLIT COUPLED VERTICAL INLINE	158.0	45	62.4	2.9	5.0	1,604	460	3	60	MFR	F	MFR	VFD	2	2	8.19	275	184TC	ARMSTRONG	SERIES 4300-2x2x8-4P-SHP	3,4,5,6
P-2	45F GLYCOL HX-1	SPLIT COUPLED VERTICAL INLINE	152.0	45	63.0	2.8	5.0	1,586	460	3	60	MFR	F	MFR	VFD	2	2	8.19	275	184TC	ARMSTRONG	SERIES 4300-2x2x8-4P-SHP	3,4,5,6
PHP-4	HOT WATER	DRY ROTOR CIRCULATOR	10.0	15	NA	NA	0.167	2,000	120	1	60	EC	F	EC	FV	1.25	1.25	2.07	13.21	NA	ARMSTRONG	R20-35-DI	

NOTES:

HEAT EXCHANGER SCHEDULE - LIQUID TO LIQUID

TAG	LOCATION	SERVES	WATER SIDE				30% GLYCOL SIDE				HEATING SURFACE (SF)	FOULING FACTOR	MANUFACTURER	MODEL	NOTES
			GPM	W.P.D. (psi)	EWT (°F)	LWT (°F)	GPM	W.P.D. (psi)	EWT (°F)	LWT (°F)					
HX-1	CATH LAB ROOF	CL 1,2,3&4	142.0	4.6	45	55	152.0	6.7	58	48	414.4	0.178	ALFALAVAL	AQ4L-FG	1, 2, 3

NOTES:
1 FOULING FACTOR UITS ARE (ft2 h °F/Btu x 10000)
2 HEAT EXCHANGER IS PLATE TYPE COSTRUCTION
3 CONTRACTOR TO PROVIDE HEAT EXCHANGER

HYDRONICS ACESSORIES SCHEDULE

TAG	LOCATION	SERVICE	TYPE	INLET SIZE NPS	CAPACITY (GAL.)	DIAMETER (INCHES)	HEIGHT (INCHES)	WEIGHT (LBS)	FLUID	WORKING PRESSURE (PSI)	OPERATING WEIGHT (POUNDS)	MANUFACTURER MODEL	HP	VOLT/PH	NOTES
AS-1&2	ROOF	30% GLYCOL/WATER	VERT. CONN. TYPE	3/4"	42	8.63	15.75	70	30% GLYCOL	160	TBD	ARMSTRONG/VAS-2	NA	NA	
ET-1&2	ROOF	30% GLYCOL/WATER	BLADDER EXPANSION TANK	3/4"	12.94	14.0	25	50	30% GLYCOL	125	TBD	ARMSTRONG/50L	NA	NA	
GF-1&2	ROOF	30% GLYCOL/WATER	GLYCOL FEEDER	-	53	TBD	TBD	145	30% GLYCOL	125	TBD	ARMSTRONG/GLA-S-HP-1	TBD	120V/1PH	
BT-1	ROOF	30% GLYCOL/WATER	BUFFER TANK	3" 150# RF	300	36.0	72	3,000	30% GLYCOL	125	TBD	AMERICAN WHEATLEY HVAC PRODUCTS/AWCBT-300	NA	NA	

NOTES:

SCHEDULE GENERAL NOTES:

A. DISCONNECT AND CONTROLLER STARTER FURNISHED AND INSTALLED BY:
- MFR = MANUFACTURER
- EC = ELECTRICAL CONTRACTOR.
- MC = FURNISHED BY MECHANICAL CONTRACTOR, INSTALLED BY ELECTRICAL CONTRACTOR
- MFR/EC = FURNISHED LOOSE BY MANUFACTURER INSTALLED BY ELECTRICAL CONTRACTOR
- TCC = TEMPERATURE CONTROL CONTRACTOR

B. DISCONNECT TYPE:
- F = FUSED
- NF = NON-FUSED

C. CONTROLLER STARTER TYPE:
- FV = FULL VOLTAGE
- WYE = WYE-DELTA
- SS = SOLID STATE (SOFT START)
- MS = MANUAL STARTER
- VFD = VARIABLE FREQUENCY DRIVE
- VFD/B = VARIABLE FREQUENCY DRIVE WITH BYPASS

D. FAN RPM SHALL NOT EXCEED 110% OF SCHEDULED VALUE, WITH THE SCHEDULED WHEEL TYPE. SUBSTITUTION OF BI OR BIA FANS FOR FC IS ACCEPTABLE IF EFFICIENCY IS NOT LOWER.

E. NO EQUIPMENT SHALL BE SELECTED ABOVE 90% OF MOTOR NAME PLATE RATING.

F. MUST BE WITHIN +/- 10% OF SCHEDULED RPM.

G. CURB TYPE:
- MFR = STANDARD CURB BY MANUFACTURER
- GC = BY GENERAL CONTRACTOR
- SAC = SOUND ATTENUATOR CURB

FAN SCHEDULE

TAG	AREA SERVED	FAN DATA							MAX. AMCA SONES	VIBRATION ISOLATION		BACKDRAFT DAMPER	CURB TYPE	ELECTRICAL							WEIGHT	MANUFACTURER	MODEL	NOTES
		TYPE	CFM	BHP	MHP	RPM	DRIVE	S.P. (IN. W.C.)		TYPE	DEFL.			VOLT	PHASE	FREQUENCY (HZ)	DISCONNECT		CONTROLLER/STARTER					
																	BY	TYPE	BY	TYPE				
RA-1	CATH LAB 4	INLINE	2,200	0.97	1.5	1,750	DIRECT	1.43	23	ELASTOMER	1/4"	NONE	STRIP	460	3	60	EC	F	EC	VFD	148	GREENHECK	SQ-15	1

NOTES:
1. CONTRACTOR SHALL SUPPLY FAN WITH PIEZO RING AND PARAGON FLOW CONTROLS.

REPLACEMENT AHU COOLING COILS

TAG	SERVES	AIR SIDE							35°F 30%-GLYCOL SIDE					COIL						MANUFACTURER	MODEL	NOTES
		FACE VEL. (FPM)	CFM	EAT		LAT		A.P.D. (IN. W.C.)	TOTAL MBH	GPM	EWT (°F)	LWT (°F)	W.P.D. (FT. HD)	SIZE (L x H) (IN.)	NO. OF ROWS	FINS/IN.	FLUID TYPE	COIL CONNECTION	TYPE			
				DB (°F)	WB (°F)	DB (°F)	WB (°F)															
CC-1	CL1-2 AHU	474.9	14,800	65.3	54.5	42.8	42.4	0.36	400.1	81.3	34	45.2	21.0	78.38 X 35	8.0	8.0	30% GLYCOL	2.5 N.P.T.	-	DAIKIN	5WL0808A	1, 2

NOTES:
1 TWO COILS ARE REQUIRED TO MAKE UP CATH LAB 1&2 COOLING COIL.
2 CONTRACTOR TO PROVIDE AND INSTALL REPLACEMENT COOLING COIL REUSING EXISTING CONTROL VALVES.

City of Aurora Building Division
Reviewed for Code Compliance
Approved as Noted: Kirk Nagle
Date: Sep 08, 2023
2021 INTERNATIONAL CODES & 2023 NEC

Salas O'Brien
salasobrien.com
Dublin
2751 Tuller Pkwy
Dublin, OH 43017
Registration:

CONFIDENTIAL
THIS DRAWING AND ASSOCIATED DESIGN ELEMENTS ARE CONFIDENTIAL AND THE PROPERTY OF SALAS O'BRIEN, WHICH RETAINS ALL COMMON LAW, COPYRIGHT, STATUTORY AND OTHER RIGHTS THERETO. REPRODUCTION OR USE WITHOUT THE PRIOR PERMISSION IS PROHIBITED, UNLESS OTHERWISE AGREED TO BY SALAS O'BRIEN, THIS DRAWING (AS WELL AS ANY COPIES) SHALL BE RETURNED TO SALAS O'BRIEN UPON REQUEST.

PROFESSIONAL SEAL

COLORADO LICENSED MICHAEL P THOMPSON 50150 PROFESSIONAL ENGINEER
8/14/2023

ISSUE DATE	DESCRIPTION
08/01/2023	100% CD

2023-00034-00
HEALTHTRUST FACILITIGROUP

TMCA CATH LAB HVAC DEHUMIDIFICATION

1501 S. POTOMAC ST,
AURORA, CO 80012

REVISIONS

Δ	DESCRIPTION	DATE
0	ISSUED FOR CONSTRUCTION	08/01/23

CHECKED BY: EBM
DRAWN BY: KDR

SHEET NAME

MECHANICAL EQUIPMENT SCHEDULES

SHEET NUMBER: M-105
REVISION: 0

Autodesk Docs://090-2023-0034 TMCA Cathlab Dehumidification Upgrades/2023-00034 TMCA Cathlab-Mech_R22_R2.rvt
8/1/2023 11:40:33 AM

PACKAGED PUMP ENCLOSURE SPECIFICATION

PART 1. GENERAL

1.01 SCOPE

FURNISH AND INSTALL WHERE SHOWN ON THE PLANS THE FACTORY INTEGRATED PACKAGED PUMP ENCLOSURE – CHIL-PAK® FROM AIR MATRIX. THE UNITS SHALL BE MANUFACTURED IN STRICT ACCORDANCE WITH THE SPECIFICATIONS, POWER CONSUMPTION, TURN-DOWN RATIO, SOUND PRESSURE LEVEL, WEIGHTS AND DIMENSIONS. ALL UNITS SHALL BE COMPLETE WITH COMPONENTS AND ACCESSORIES MOUNTED AS SPECIFIED. UNITS MUST MEET PHYSICAL DIMENSIONS AND WEIGHTS AS SPECIFIED HEREIN OR SHOWN ON THE DRAWINGS.

1.02 MANUFACTURER'S QUALIFICATIONS

PROVIDE PACKAGED PUMP ENCLOSURE CHIL-PAK® AS MANUFACTURED BY AIR MATRIX. COMPARABLE EQUIPMENT MANUFACTURERS SHALL BE ENGAGED IN THE PRODUCTION OF PACKAGED PUMP ENCLOSURE AND ISSUE A COMPLETE CATALOG AND/OR COMPUTER GENERATED PERFORMANCE INFORMATION. THE FACTORY SHALL BE CERTIFIED TO TEST IN ACCORDANCE WITH UL 1995 AND LABEL THE ENTIRE UNIT UNDER ETL, UL OR CSA. THE FACTORY SHALL BE ISO 9001:2015 CERTIFIED. MANUFACTURER SHALL BE A COMPANY SPECIALIZING IN THE DESIGN AND MANUFACTURE OF PACKAGED PUMP ENCLOSURES. MANUFACTURER SHALL HAVE BEEN IN PRODUCTION SPECIFICALLY OF PACKAGED PUMP ENCLOSURES FOR A MINIMUM OF 10 YEARS. PUMP SKID EXPERIENCE ALONE DOES NOT QUALIFY.

EACH UNIT SHALL BEAR AN ETL OR UL LABEL UNDER UL STANDARD 1995 INDICATING THE COMPLETE UNIT IS LISTED AS AN ASSEMBLY. ETL OR UL LISTING OF INDIVIDUAL COMPONENTS, OR CONTROL PANELS ONLY, IS NOT ACCEPTABLE.

1.03 ACCEPTABLE MANUFACTURERS

THE FOLLOWING MANUFACTURER'S PRODUCTS ARE APPROVED, SUBJECT TO THE REQUIREMENTS OF THIS ENGINEERING SPECIFICATION. NAMING OF MANUFACTURERS DOES NOT IMPLY THAT THEIR STANDARD CONSTRUCTION IS ACCEPTABLE, NOR DOES IT IMPLY THAT THEIR PRODUCTS ARE AUTOMATICALLY APPROVED. A MANUFACTURER WHO IS NOT THE BASIS OF DESIGN IS REQUIRED TO SUBMIT TO THE MECHANICAL ENGINEER THE PROPOSED EQUIPMENT, ALONG WITH A COMPARISON LETTER ADDRESSING EACH ITEM IN THE SPECIFICATION AND STATING COMPLIANCE WITH THE SPECIFICATIONS. THIS PROPOSED SUBMITTAL MUST BE APPROVED IN WRITING BY THE MECHANICAL ENGINEER.

A. CARRIER/CHIL-PAK (BASIS OF DESIGN)
B. TURBINE AIR SYSTEMS
C. SYSTECON

1.04 SUBSTITUTIONS

SUBSTITUTIONS MUST BE APPROVED IN WRITING BY THE MECHANICAL ENGINEER 15 DAYS PRIOR TO THE BID DATE. THERE SHALL BE NO EXCEPTIONS TO THIS REQUIREMENT, AND SUBMITTALS OF MANUFACTURERS WHO HAVE NOT OBTAINED WRITTEN APPROVAL PRIOR TO BID WILL BE REJECTED AND RETURNED WITHOUT REVIEW. ANY MANUFACTURER REQUESTING APPROVAL MUST PROVIDE THE FOLLOWING:

A. DIMENSIONAL DRAWINGS TO ILLUSTRATE THE EQUIPMENT FOOTPRINT REQUIRED INCLUDING ASSOCIATED PIPING AND SERVICE CLEARANCES.
B. AN ITEMIZED LIST OF ALL MAIN COMPONENTS INCLUDED IN THEIR SYSTEM.
C. ANY AND ALL EXCEPTIONS AND/OR EXCLUSIONS TO THIS SPECIFICATION OR SCOPE OF WORK.

1.05 CODES AND STANDARDS

A. MANUFACTURER SHALL PROVIDE COMPONENTS CONFORMING TO THE LATEST CODES AND STANDARDS LISTED BELOW.
B. NATIONAL ELECTRICAL MANUFACTURERS ASSOCIATION (NEMA)
C. NATIONAL ELECTRIC CODE (NEC)
D. NATIONAL FIRE PROTECTION ASSOCIATION (NFPA)
E. PACKAGED PUMP ENCLOSURE INTERNAL INSULATION MUST HAVE A FLAME SPREAD RATING NOT OVER 25 AND SMOKE DEVELOPED RATING
NO HIGHER THAN 50 COMPLYING WITH NFPA 90A, 90B AND ASTM E48 TEST METHODS.
F. ADDITIONALLY, WHEN CONNECTING UP TO THE PCP ALL OF THE FOLLOW AGENCIES MUST BE OBSERVED
G. NFPA 70 "NATIONAL ELECTRICAL CODE" AS APPLICABLE FOR INSTALLATION AND ELECTRICAL CONNECTIONS OF ANCILLARY ELECTRICAL COMPONENTS OF PACKAGE CENTRAL PLANT.
H. INTERNATIONAL PLUMBING CODE (UPC).
I. INTERNATIONAL MECHANICAL CODE (IMC).

1.06 SUBMITTALS

PROVIDE A COMPLETE PUMP ENCLOSURE SUBMITTAL WITH THE PROPOSAL. AS A MINIMUM, THE SUBMITTAL SHALL INCLUDE THE FOLLOWING:

A. PROJECT REQUIREMENTS SUMMARY WITH ALL POWER CONSUMING EQUIPMENT TABULATED.
B. DIMENSIONED PLAN AND ELEVATION VIEW, INCLUDING REQUIRED CLEARANCES, WEIGHTS, LOCATION OF ALL PIPING AND ELECTRICAL CONNECTIONS.
C. FLOW AND CONTROL DIAGRAMS INDICATING PIPING CONFIGURATION, ACCESSORIES, CONTROL POINTS FOR FIELD INTERFACE AND FIELD CONNECTION. DIAGRAM SHALL FULLY DEPICT FIELD AND FACTORY WIRING.
D. ELECTRICAL ONE LINE DIAGRAMS FOR 460/3/60 AND 120-208V FEEDS.
E. DOCUMENTATION OF ALL MAJOR PUMP ENCLOSURE COMPONENTS.

This sheet of drawings has not been reviewed for code compliance.

PART 2. PRODUCTS

2.01 PACKAGED PUMP ENCLOSURE DESCRIPTION

THE PACKAGED PUMP ENCLOSURE SHALL PROVIDE ALL PUMPS, HEAT EXCHANGERS, GLYCOL FEEDERS, AND BALANCE VALVES TO SERVE THE DEHUMIDIFICATION SYSTEM OF THE CATH LABS.
POWER SHALL BE SUPPLIED BY A SINGLE POWER FEED FEEDS. THE SINGLE POWER FEED IS 460/3/60 AND WILL POWER ALL OTHER EQUIPMENT IN THE PUMP ENCLOSURE. NO SEPARATE 120-208V THREE PHASE FEED IS REQUIRED; ALL TRANSFORMING REQUIRED FOR CONTROLS, LIGHTING, RECEPTACLES, ETC. IS PROVIDED INTERNAL TO THE PUMP ENCLOSURE.

2.02 UNIT CONSTRUCTION

(A) CABINET
1. PACKAGED PUMP ENCLOSURE SHALL BE CONSTRUCTED OF PRIME QUALITY G90 GALVANIZED STEEL FORMED 16-GAUGE OUTER PANELS AND FURNISHED WITH A MINIMUM ROOF PITCH OF ¼" PER FOOT. OUTER PANELS SHALL BE SECURED TO AN INTEGRAL, WELDED TUBULAR STRUCTURAL STEEL FRAME SUCH THAT EXTERIOR PANELS SHALL BE NON-LOAD BEARING. EXTERIOR PANELS SHALL BE REMOVABLE WITHOUT AFFECTING THE STRUCTURAL INTEGRITY OF THE UNIT. SIDE AND ROOF PANELS SHALL BE FASTENED AND SEALED TO EACH OTHER. PANELS SHALL BE FULLY INSULATED AND NOT LESS THAN 2" THICK.
2. THE PACKAGED PUMP ENCLOSURE SHALL BE FACTORY ASSEMBLED AND SHIPPED IN ONE PIECE, EXCEPT WHEN PHYSICAL LIMITATIONS PREVENT SUCH SHIPMENT. WHEN THIS OCCURS, UNITS WILL BE SHIPPED IN SECTIONS FOR FIELD RE-ASSEMBLY BY THE INSTALLING CONTRACTOR. THE MANUFACTURER SHALL FURNISH ALL HARDWARE AND GASKETING NECESSARY FOR RE-ASSEMBLY AND WEATHERPROOFING IN FIELD BY THE INSTALLING CONTRACTOR.
3. FLOOR DRAINS SHALL BE PROVIDED UNDER OR NEAR PUMPS, CONDENSER, AND EVAPORATOR CLEAN OUT PLATES. ALL DRAIN PIPING SHALL BE TYPE L COPPER AND EXTEND TO THE OUTSIDE OF THE BASE FRAME. DRAIN TERMINATION AND ALL NECESSARY VENTS AND P-TRAPS SHALL BE PROVIDED BY THE CONTRACTOR IN THE FIELD.

(B) STRUCTURE
1. UNIT BASE FRAME SHALL BE MANUFACTURED USING STRUCTURAL HOT ROLLED I-BEAMS AND/OR C-CHANNEL STEEL FITTED WITH STRUCTURAL HOT ROLLED I-BEAMS OR C-CHANNEL CROSS SUPPORT MEMBERS AS REQUIRED TO SUPPORT THE COMPONENTS AND FLOOR. ALL CRITICAL LOAD BEARING POINTS SHALL BE ENGINEERED FOR STRUCTURAL INTEGRITY TO MEET BOTH STATIONARY, RIGGING AND SHIPPING THRUST INERTIA.
2. EACH PUMP ENCLOSURE MODULE SHALL INCLUDE A MINIMUM OF FOUR LIFTING POINTS PER MODULE INTEGRATED WITHIN THE STRUCTURE AS REQUIRED. RIGGING RECOMMENDATIONS SHALL BE PROVIDED BY THE PUMP ENCLOSURE MANUFACTURER.
3. THE UNIT BASE FLOOR SHALL BE CONSTRUCTED OF 0.25" STEEL TREAD PLATE WELDED TO THE SUPPORTING SKID STRUCTURE. THE UNIT BASE SHALL BE DESIGNED TO BE GROUND MOUNTED ON A LEVEL CONCRETE SLAB OR ON A STEEL STRUCTURE THAT SUPPORTS THE ENTIRE PERIMETER AND ALL CRITICAL LOAD POINTS OF THE PUMP ENCLOSURE.
4. UNIT FRAMEWORK SHALL BE ENGINEERED AND CONSTRUCTED TO MEET ASTM STANDARDS FOR A TRUSS STRUCTURE AND FULLY MIG-WELDED TO FORM A UNITIZED FRAME FOR THE SUPPORT OF ALL NECESSARY PIPES, FITTINGS, VALVES AND PUMPS. PIPING IS TO BE PRIMARILY SUPPORTED FROM THE CABINET STRUCTURE AND NOT FROM THE FLOOR IN ORDER TO FACILITATE EASY MAINTENANCE ACCESS TO ALL EQUIPMENT.
5. THE BASE FRAME AND ALL INTERNAL STRUCTURAL COMPONENTS SHALL BE THOROUGHLY CLEANED AND COMPLETELY COATED WITH A SPECIALTY COATING SYSTEM DESIGNED FOR MARINE APPLICATIONS. THIS SYSTEM SHALL CONSIST OF A ZINC RICH PRIMER, 84% BY WEIGHT SOLIDS (EQUIVALENT TO SHERWIN WILLIAMS ZINC CLAD 200), FOLLOWED BY 1.5 MILS OF EPOXY, 79% BY WEIGHT SOLIDS (EQUIVALENT TO SHERWIN WILLIAMS SARGUARD 5000 HS), AND A FINAL ACRYLIC POLYURETHANE TOP COAT, 78% BY WEIGHT SOLIDS (EQUIVALENT TO SHERWIN WILLIAMS ACROLON 218 HS).
6. ADHESION ON METAL SUBSTRATE SHALL COMPLY WITH ASTM D-3359-B.

(C) CASING
1. EXTERIOR CASING PANEL SHALL BE OF DOUBLE WALL CONSTRUCTION, 2" THICK. EACH PANEL SHALL CONSIST OF A 16 GA G90 GALVANIZED STEEL OUTER SHEET, A THICKNESS OF 2" USING R-11 FIBERGLASS INSULATION AND A 20 GA G90 GALVANIZED INNER SHEET. THE PANELS SHALL BE FASTENED AND CAULKED TO THE TUBULAR FRAME WITH 5/16" HEX HEAD, ZINC-PLATED INDUSTRIAL FASTENERS WITH A NEOPRENE GASKET WASHER. EXTERIOR PANELS SHALL NOT AFFECT THE STRUCTURAL INTEGRITY OF THE UNIT. TO PREVENT DETERIORATION OF THE GALVANIZED STEEL AND FOR EASE OF DISASSEMBLY IF NEEDED, NO WELDING SHALL BE PERFORMED ON THE CASING PANELS.
2. CASING PANELS SHALL BE COATED WITH AN EPOXY-BASED PRIMER AND THERMALLY CURED TO ACHIEVE A DRY FILM THICKNESS OF 0.15 – 0.20 MILS, TO PROMOTE GOOD ADHESION TO THE GALVANIZED SUBSTRATE. THE BEIGE TOPCOAT SHALL BE APPLIED AT A THICKNESS OF APPROXIMATELY 1.60 MILS AND THERMALLY CURED TO ACHIEVE A DRY FILM THICKNESS OF 0.80-0.90 MILS.

THE PAINT SYSTEM DESCRIBED ABOVE HAS BEEN TESTED TO MEET THE FOLLOWING STRINGENT CRITERIA FOR WEATHERPROOF AND CORROSION PROTECTION, AS DESCRIBED BELOW.

SPECULAR GLOSS	ASTM D-523	75 MINIMUM
ADHESION	ASTM D-3359	2 T NO TAPE OFF
MORTAR RESISTANCE	ASTM C-267	NO EFFECT
DETERGENT RESISTANCE	ASTM D-2248	NO EFFECT
20% MURIATIC ACID	ASTM D-1308	NO EFFECT
ACID RAIN	KESETERNICH	PASS 10 CYCLES
ALKALI RESISTANCE 5%	KESETERNICH	NO EFFECT
SALT SPRAY	ASTM B-117	PASSES 750 HRS.
HUMIDITY	ASTM D-2247	PASSES 1000 HRS, NO BLISTER, CRACK OR PEEL
HUMIDITY CABINET	ASTM D-4585	PASSES 1000 HRS.
SOUTH FLORIDA EXPOSURE	ASTM D-2240	LESS THAN 5 NBS UNITS
UV TYPE-B	ASTM D-822	PASSES 500 HRS.
CHALK RESISTANCE	ASTM D-649	#8 RATING

3. HAND-SPRAYED AND AIR-DRIED BASED PAINTING SYSTEMS ARE NOT ACCEPTABLE ON EXTERIOR CASING. IF A CERTAIN MANUFACTURER'S COATING DOES NOT COMPLY WITH THE ABOVE-SPECIFIED STANDARDS OF THE PAINTING SYSTEM, THEIR COATING SYSTEM MUST BE REVIEWED AND ACCEPTED IN WRITING BY THE MECHANICAL ENGINEER PRIOR TO BID.
4. INNER LINER. UNITS MUST HAVE DOUBLE WALL CONSTRUCTION WITH A 20-GAUGE, G-90 GALVANIZED STEEL INNER LINER. THE ENTIRE DOUBLE WALL PANEL SHALL BE REMOVABLE FROM THE OUTSIDE OF THE UNIT WITHOUT AFFECTING THE STRUCTURAL INTEGRITY OF THE UNIT.
5. PANEL INSULATION. INSULATION SHALL BE CERTIFIED R-11 FIBERGLASS, NONCOMBUSTIBLE WITH A FIRE HAZARD CLASSIFICATION OF FHC 25/50 OR BETTER. INSULATION SHALL NOT BE DISTURBED IF PANELS ARE REMOVED.

(D) ACCESS DOORS
1. MAN-SIZE, DOUBLE-WALL ACCESS DOORS SHALL BE PROVIDED ON ALL SECTIONS WHICH REQUIRE ACCESS FOR MAINTENANCE OR SERVICE. UNIT SHALL BE SUPPLIED WITH GALVANIZED STEEL, 16-GAUGE DOUBLE WALL, HINGED DOORS. DOORFRAMES SHALL BE EXTRUDED ALUMINUM. ACCESS DOORS SHALL BE FLUSHED WITH THE OUTSIDE OF THE UNIT AND SHALL HAVE EPDM SOLID RUBBER SEALS AND COMMERCIAL QUALITY SCHLAGE DOOR AND LOCKSET THAT AUTOMATICALLY UNLOCKS FROM THE INSIDE. TO INSURE THE SAFETY OF MAINTENANCE PERSONNEL, DOORS THAT DO NOT OPEN FROM INSIDE OF THE UNIT WILL NOT BE ACCEPTABLE. GASKET SHALL BE CLOSED-CELL, SPONGE PRODUCT MANUFACTURED FROM A CUSTOM FORMULATED EPDM SPONGE MATERIAL. IT SHALL HAVE EXCELLENT RESISTANCE TO OZONE, WATER ABSORPTION, SUNLIGHT AGING AND COMPRESSION SET. GASKET SHALL BE RATED FOR CONTINUOUS DUTY FROM -20°F TO +150°F. GASKET SHALL COMPLY WITH ASTM D-1056 2A2.
2. ADDITIONAL ACCESS DOORS REQUIRED FOR MAINTENANCE OR SERVICE OF EQUIPMENT SHALL BE GALVANIZED STEEL, 16-GAUGE DOUBLE WALL, HINGED DOORS FITTED WITH COMPOSITE ROLLER CAM HANDLES THAT CAN BE OPENED FROM THE INSIDE. KNURLED KNOB-TYPE LATCHES ARE NOT ACCEPTABLE AND FORM-TYPE FLAT, NEOPRENE GASKETS ARE NOT AN ACCEPTABLE SEAL. ACCESS DOORS MUST BE ABLE TO SWING A FULL 180° OPEN OR BE COMPLETELY REMOVABLE TO ALLOW COMPLETE AND FULL ACCESS. EACH HINGED DOOR SHALL BE FITTED WITH A MINIMUM OF TWO (2) STAINLESS STEEL BUTT HINGES. GASKET SHALL BE CLOSED-CELL, SPONGE PRODUCT MANUFACTURED FROM A CUSTOM FORMULATED EPDM SPONGE MATERIAL. IT SHALL HAVE EXCELLENT RESISTANCE TO OZONE, WATER ABSORPTION, SUNLIGHT AGING AND COMPRESSION SET. GASKET SHALL BE RATED FOR CONTINUOUS DUTY FROM -20°F TO +150°F. GASKET SHALL COMPLY WITH ASTM D-1056 2A2.

(E) ROOFING
1. FOR MULTIPLE MODULE UNITS, EACH MODULE SHALL BE PROVIDED WITH A MEMBRANE ROOFING SYSTEM EQUAL TO SIKA SARNOFIL G410 ROOFING SYSTEM OR A METAL STANDING SEAM ROOF. THE PUMP ENCLOSURE SUPPLIER SHALL PROVIDE FIELD INSTALLATION OF ANY ROOFING THAT IS REQUIRED TO SEAL THE JOINTS BETWEEN MODULES.
2. FOR MODULES WITH COOLING TOWERS MOUNTED ABOVE THE CABINET, THE ROOFING MATERIAL MUST BE RESISTANT TO THE WATER AND CHEMICALS FROM THE TOWERS. THE MEMBRANE ROOF SPECIFIED ABOVE IS ACCEPTABLE. IF A METAL ROOF IS PROPOSED THE PUMP ENCLOSURE MANUFACTURER MUST PROVIDE PROOF THAT THE METAL ROOF WILL NOT BE CORRODED BY THE COOLING TOWER WATER.
3. EACH MODULE SHALL INCLUDE A REMOVABLE SERVICE HATCH LOCATED DIRECTLY ABOVE THE CHILLER'S COMPRESSOR TO FACILITATE SERVICE OR REPLACEMENT OF COMPRESSOR WHEN THE COMPRESSOR IS OF SUCH A SIZE AS TO PRECLUDE REMOVING IT THROUGH THE NORMAL ACCESS DOORS. A REMOVABLE ROOF SHALL BE ACCEPTABLE AS LONG AS REINSTALLATION OF THE ROOF REQUIRES NO ADDITIONAL SEALING OR ROOF REPAIRS.
4. SINGLE MODULE UNITS SHALL HAVE A METAL STANDING SEAM ROOF OVER THE INSULATED ROOF PANELS. ROOF SHALL BE SLOPED TO ENSURE ADEQUATE WATER RUNOFF. (SEE SEPARATE REQUIREMENT FOR TOWERS MOUNTED ABOVE THE PUMP ENCLOSURE.)

2.03 PACKAGED PUMP ENCLOSURE COMPONENTS

PART 2 — PRODUCTS

2.01 EQUIPMENT

A. PUMPS – VERTICAL INLINE SPLIT COUPLED PUMPS WITH LOOSE ABB VFDS MOUNTED IN ELECTRICAL BOX ON EXTERNAL WALL OF PUMP ENCLOSURE BY FACTORY.
(A) PLATE AND FRAME HX WITH 304 SS PLATES AND 20% ADDITIONAL PLATE CAPACITY
(B) ELECTRICAL
1. WIRING
a. PROVIDE A SINGLE POINT 460/3/60 CONNECTION FOR ALL ELECTRICAL LOADS INSIDE THE PUMP ENCLOSURE. ALL INTERNAL WIRING WILL BE INSTALLED AT THE PUMP HOES FACTORY. THE ONLY INTERNAL WIRING CONNECTIONS REQUIRED IN THE FIELD THAT WILL BE ACCEPTED ARE THOSE REQUIRED DUE TO DISASSEMBLY OF THE EQUIPMENT FOR SHIPPING.
b. NO 120-208V 3 PHASE CONNECTION FOR ALL LIGHTING, FANS, CONTROLS, ETC. WILL BE SUPPLIED. THE PUMP ENCLOSURE MUST INCLUDE ALL TRANSFORMERS REQUIRED FOR PROPER OPERATION. [OR SEPARATE 120-208V 3 PHASE FEED WILL BE SUPPLIED.]
c. PANELS AND CHILLER STARTERS/VFDS SHALL HAVE A THROUGH THE DOOR FUSED MAIN DISCONNECT.
d. SINGLE-PHASE MOTORS, WHERE SCHEDULED SHALL HAVE A NEMA-RATED MAGNETIC STARTER. IEC STARTERS ARE ACCEPTABLE.
e. ALL POWER WIRING IN THE PACKAGED CENTRAL CHILLER PLANT SHALL BE RUN IN METAL CONDUIT, RACEWAY OR LIQUID TIGHT FLEX (3-FOOT MAXIMUM) WITH RAIN-TIGHT FITTINGS.
f. ALL POWER AND CONTROL WIRING BETWEEN MODULES OF THE PUMP ENCLOSURE SHALL UTILIZE PHOENIX (OR EQUIVALENT) QUICK CONNECTS. REQUIRING THE INSTALLING CONTRACTOR TO RECONNECT WIRING TO TERMINALS OR LUGS IS NOT ACCEPTABLE.
g. THE ABOVE APPLICABLE ITEMS SHALL BE COMPLETELY INSTALLED AND WIRED AT THE FACTORY ACCORDING TO ETL STANDARD 1995. UNITS SHALL BEAR A NATIONALLY RECOGNIZED TESTING LABORATORY LABEL AND SHALL BE FACTORY TESTED IN ACCORDANCE WITH UL STANDARD 1995.
2. LIGHTING
A. DUST/VAPOR RATED FLUORESCENT LIGHTS SHALL BE PROVIDED INSIDE THE PACKAGED PUMP ENCLOSURE AS REQUIRED TO ILLUMINATE EQUIPMENT FOR INSPECTION AND MAINTENANCE. THEY SHALL BE CONNECTED TO "ON-OFF" SWITCHES LOCATED FOR EASE OF ACCESS WITHIN THEIR RESPECTIVE SECTIONS. THEY SHALL BE PROPERLY WIRED AND GROUNDED. LIQUID-TIGHT FLEXIBLE METAL CONDUIT IS NOT AN ACCEPTABLE ALTERNATE FOR ½" THIN WALL METALLIC CONDUIT.
B. AN OUTDOOR RATED EXTERIOR LIGHT SHALL BE PROVIDED OVER THE MAIN ACCESS DOOR WITH A LIGHT LEVEL SENSING CELL AND ON/OFF SWITCH.
3. ELECTRIC PANELBOARDS AND SWITCHBOARDS
A. ACCEPTABLE MANUFACTURERS
I. GE SPECTRA SERIES OR EQUAL.
4. VARIABLE FREQUENCY DRIVES
a. VARIABLE FREQUENCY DRIVES SHALL BE MODEL ABB ACH550, NO EXCEPTIONS.

(C) INTERNAL PIPING AND HYDRONICS
1. PIPING
a. PIPING 2" OR LESS MAY BE TYPE L COPPER OR ASTM A120 #40 BLACK STEEL WITH THREADED STANDARD WEIGHT FITTINGS.
b. PIPING 2.5" AND LARGER SHALL BE ASTM A53B #40 BLACK STEEL WITH STANDARD WEIGHT WELDED FITTINGS. ALL THERMOMETER SENSOR WELLS SHALL HAVE A MINIMUM OF 3/4" STANDARD WEIGHT THREAD-O-LETS AND GAGE CONNECTIONS SHALL HAVE 1/2" 3000 PSI RATED THREAD-O-LETS. FLOW SWITCHES SHALL HAVE 1" 3000 PSI RATED THREAD-O-LETS. PIPE CONNECTIONS/FLANGES SHALL BE MECHANICALLY GROOVED VICTAULIC TYPE.
c. CHILLED WATER PIPING SHALL BE SIZED FOR 5-7 FT/SEC VELOCITY EXCEPT FOR HEADERS WHICH MAY HAVE WATER VELOCITY OF UP TO 10 FT/SEC.
d. ALL PIPING, PUMPS AND ACCESSORIES SHALL BE ENGINEERED, FABRICATED AND INSTALLED TO WITHSTAND NORMAL SHIPPING THRUST FOR OVER THE ROAD TRANSPORTATION TO THE JOB SITE.
2. VALVES
a. MANUAL VALVES 2.5" AND LARGER SHALL BE OF THE BUTTERFLY TYPE WITH THREADED LUGS. MANUAL VALVES 6" AND SMALLER SHALL BE EQUIPPED WITH LEVER TYPE HANDLES. MANUAL VALVES LARGER THAN 6" SHALL BE PROVIDED WITH GEAR OPERATORS.
b. MANUAL VALVES 2" AND SMALLER SHALL BE LARGE ORIFACE BALL VALVES RATED AT A MINIMUM OF 125#. CONNECTIONS MAY BE THREADED OR SOLDERED.
c. CONTROL VALVES
i. CONTROL VALVES SHALL BE BELIMO.
ii. A CHILLED WATER BYPASS SHALL BE INCLUDED INSIDE THE PCP TO MAINTAIN THE MINIMUM CHILLED WATER FLOW REQUIRED FOR PROPER CHILLER OPERATION.
3. HYDRONIC ACCESSORIES
a. AN AIR ELIMINATOR ASSEMBLY SHALL BE INSTALLED IN THE LOW PRESSURE SECTION OF CHW PIPING. ELIMINATOR SHALL BE OF THE TANK (VORTEX) TYPE AND SHALL BE LINE SIZED. AIR FROM ELIMINATOR SHALL BE DISCHARGED THROUGH AN AUTOMATIC AIR VENT. APPROVED MANUFACTURER IS ARMSTRONG VAS-4 OR EQUAL.
b. A BLADDER EXPANSION TANK, ARMSTRONG OR EQUIVALENT SHALL BE INCLUDED.
c. PRESSURE GAGES SHALL BE OF THE 2.5" DIAMETER ANALOG TYPE WITH BLACK STEEL CASE AND WHITE FACE. BRASS COCKS SHALL BE PROVIDED TO ISOLATE GAGE FROM SYSTEM WHEN NOT BEING READ.
d. THERMOMETERS SHALL BE OF THE 3.5" DIGITAL READOUT.
e. AN AUTOMATIC POT FEEDER TYPE WATER TREATMENT SYSTEM SHALL BE FURNISHED AND INSTALLED BY PUMP ENCLOSURE MANUFACTURER. CHEMICALS, START-UP AND COMMISSIONING SHALL BE PROVIDED BY THE CONTRACTOR.
f. A GLYCOL MANAGEMENT SYSTEM, ARMSTRONG GLA OR EQUAL SHALL BE INCLUDED. GLYCOL IS TO BE PROVIDED BY THE INSTALLING CONTRACTOR.
g. A 300 GALLON BUFFER TANK FOR THE CHILLED WATER LOOP SHALL BE INCLUDED. THE TANK SHALL BE ASME RATED AND SHALL HAVE INTERNAL BAFFLES TO ENSURE PROPER MIXING OF THE WATER.
4. PIPING INSULATION
a. ALL CHW PIPING INSULATION, JACKETING AND LABELING SHALL BE PROVIDED AND FACTORY INSTALLED BY THE PCP MANUFACTURER.
b. THE FULL CHW CIRCUIT SHALL BE INSULATED WITH 1 ½" FIBERGLASS INSULATION WITH PVC JACKET AND LABELS.
5. MAKEUP WATER PIPING
a. THE PUMP ENCLOSURE SHALL BE FURNISHED WITH A MAKEUP WATER STATION THAT INCLUDES: A PRV (PRESSURE REDUCING VALVE) TO REGULATE THE SYSTEM WATER PRESSURE, A QUICK FILL BYPASS, AND A DOUBLE CHECK BACKFLOW PREVENTER. THE COOLING TOWER MAKEUP WATER CONNECTION AND PRV (IF REQUIRED) IS PROVIDED AND INSTALLED BY THE INSTALLING CONTRACTOR.
b. REDUCED PRESSURE BACKFLOW PREVENTER (IF REQUIRED BY CODE) IS PROVIDED AND INSTALLED BY THE INSTALLING CONTRACTOR AND IS EXTERNAL TO THE PUMP ENCLOSURE.
6. MISC. ACCESSORIES
a. THE PUMP ENCLOSURE SHALL BE MAINTAINED BETWEEN 45° F AND 85° F AT ALL TIMES. ELECTRIC UNIT HEATER SHALL BE PROVIDED FOR FREEZE PROTECTION.
b. ADDITIONAL DX COOLING THROUGH WALL AC UNIT SHALL BE PROVIDED TO MAINTAIN THE PUMP ENCLOSURE TEMPERATURE BELOW 85° F.

(D) CONTROLS
1. CONTROLS
a. ALL CONTROLS AND COMMUNICATION WIRING BETWEEN THE CHIL-PACK PUMP ENCLOSURE AND THE BUILDING IS BY OTHERS. EMPTY CONTROL PANEL IS PROVIDED WITH COMMUNICATIONS WIRING TO EACH VFD FORM THE PANEL.

PART 3. EXECUTION

3.01 TESTING AND STARTUP

FACTORY TEST (AS REQUIRED TO ETL LABEL THE EQUIPMENT), INSPECT AND THOROUGHLY CLEAN ENTIRE UNIT AFTER ASSEMBLY PRIOR TO SHIPMENT. STANDARD FACTORY TESTING INCLUDES PRESSURE TESTING ALL PIPING, ELECTRICAL CONTINUITY TESTS, ETC. AS REQUIRED FOR ETL LABELING OF EQUIPMENT

THE MANUFACTURER SHALL PROVIDE WITHIN THE PUMP ENCLOSURE, A DETAILED PRE-SHIPPING INSPECTION CHECKLIST COMPLETED AT THE FACTORY. ALSO PROVIDED WILL BE A PRE-START CHECKLIST AND COMMISSIONING RECORD WHICH MUST BE COMPLETED AND FAXED BACK TO THE MANUFACTURER WITHIN 30 DAYS OF STARTUP TO VALIDATE THE FACTORY WARRANTY.

3.02 INSTALLATION AND START-UP TO BE PERFORMED BY INSTALLING CONTRACTOR

PRIOR TO UNLOADING AND HANDLING THE SECTIONS OF THE EQUIPMENT THE CONTRACTOR SHALL OBTAIN, READ AND BE FAMILIAR WITH THE HANDLING AND INSTALLATION INSTRUCTIONS.

RECEIVING (INCLUDING INTERIOR AND EXTERIOR INSPECTION). REMOVAL OF PROTECTIVE WRAPPING SUCH AS SHRINK-WRAP, WOOD CRATING, AND PACKING.

INSPECT INTERIOR AND EXTERIOR AND REPORT ANY OBVIOUS DAMAGE, OR EQUIPMENT SHIFTING THAT MAY HAVE TAKEN PLACE DURING SHIPPING.

HOISTING/RIGGING THE SECTIONS INTO FINAL LOCATION. JOIN ANY DE-MOUNTED SECTIONS FOLLOWING THE MANUFACTURER'S INSTRUCTIONS INCLUDING PIPE SPOOLS AND ELECTRICAL CONNECTIONS BETWEEN MODULES.

SECTIONS OF THE UNIT SHALL BE SET IN PLACE ON A FLAT AND LEVEL CONCRETE PAD, SHIMMED LEVEL ± 0.125"/10' AND CONNECTED TOGETHER USING THE GASKETS AND TRIM PIECES SUPPLIED BY THE MANUFACTURER, ALL PER MANUFACTURER'S RECOMMENDED INSTRUCTIONS. UNIT SECTIONS SHALL BE ATTACHED TO THE CONCRETE PAD (IF REQUIRED) PER METHOD SHOWN IN THE PLANS.

RE-INSTALL ANY EQUIPMENT, PIPE SPOOLS, STACKS, OR ENCLOSURE TRIM SHIPPED LOOSE DUE TO SHIPPING CONSTRAINTS. NOTE THAT THE CONTRACTOR MAY HAVE TO MAKE MINOR ADJUSTMENTS TO PIPE SUPPORTS WHILE REASSEMBLING PIPING THAT WAS DISCONNECTED FOR SHIPPING PURPOSES.

CHILLED WATER PIPING INSULATION, JACKETS AND FLOW LABELS WITHIN THE EQUIPMENT SHALL BE PROVIDED AND FACTORY INSTALLED BY THE MANUFACTURER AND CONFORM TO THE REQUIREMENTS OF THE INSULATION SECTION. ANY INSULATION REMOVED FOR SHIPPING MUST BE SUPPLIED WITH THE UNIT AND REINSTALLED BY INSTALLING CONTRACTOR.

REALIGN ALL SPLIT COUPLED PUMPS. NOTE: PUMPS ARE TO BE ALIGNED BY THE PUMP ENCLOSURE MANUFACTURER PRIOR TO SHIPMENT.

COMPLETE THE PRE-START CHECKLIST (SUPPLIED BY THE PUMP ENCLOSURE MANUFACTURER) AND RETURN TO THE PUMP ENCLOSURE MANUFACTURER.

FLUSH AND FILL THE SYSTEM. THE CONTRACTOR, AFTER THOROUGHLY FLUSHING OF ALL DEBRIS, SHALL FILL THE CONDENSER PIPING AND CHILLED WATER LOOP SYSTEM WITH WATER. ALL AIR SHALL BE BLED FROM THE CHILLED WATER SYSTEM PRIOR TO START-UP.

CONNECT ALL UTILITIES FOR THE PACKAGED CENTRAL PLANT INCLUDING FIELD TERMINATION OF PIPING, DRAINS, MAKEUP WATER, CONTROL WIRING, AND ELECTRICAL FEEDS.

TOUCH UP AND PAINT SCRATCHES AND MINOR DENTS THAT OCCURRED DURING HOISTING AND RIGGING.

CONTRACTOR SHALL PROVIDE A COMPLETE WATER BALANCE REPORT PRIOR TO START-UP OF THE CENTRAL PLANT SYSTEM AND HAVE SUCH AVAILABLE FOR USE BY THE START-UP AGENCY.

PIPING CONNECTIONS TO THE UNIT SHALL BE ACCOMPLISHED SO NO STRAIN IS PLACED ON THE PIPING WITHIN THE UNIT.

CONTRACTOR SHALL DELIVER START-UP REPORT TO THE OWNER PRIOR TO ACCEPTANCE.

CONTRACTOR SHALL, UPON COMPLETION OF START-UP, IDENTIFY ALL MANUAL AND CONTROL VALVES BY A 2" ROUND BRASS TAG FASTENED TO THE VALVE WITH A BRASS CHAIN. EACH TAG SHALL HAVE A NUMBER STAMPED THEREON. A VALVE SCHEDULE SHALL BE PREPARED AND ATTACHED TO THE INTERIOR WALL OF THE UNIT. SCHEDULE SHALL BE MOUNTED UNDER GLASS, PLASTIC OR BE SUITABLY LAMINATED AND FRAMED. SCHEDULE SHALL IDENTIFY VALVE NUMBER, TYPE, PURPOSE AND OPERATING POSITION.

PRIOR TO FINAL ACCEPTANCE CONTRACTOR SHALL CLEAN THE INTERIOR AND EXTERIOR OF THE UNIT. FLOOR SHALL BE BROOM CLEAN. ALL ABRASIONS SHALL BE TOUCHED UP TO MATCH THE EXISTING SURFACES. PIPE DOPE, INSULATION ADHESIVE AND OTHER FOREIGN MATERIALS DEPOSITED IN THE COURSE OF CONSTRUCTION SHALL BE REMOVED PRIOR TO FINAL ACCEPTANCE.

3.03 WORK TO BE PERFORMED BY PUMP ENCLOSURE MANUFACTURER

THE PUMP ENCLOSURE MANUFACTURER SHALL PROVIDE WRITTEN INSTALLATION INSTRUCTIONS INCLUDING RIGGING INSTRUCTIONS.

COMPLETE UNIT INCLUDING VARIABLE FREQUENCY DRIVES SHALL BE STARTED UP. CONTROLS START-UP SHALL BE COORDINATED WITH THE BAS CONTRACTOR/MANUFACTURER.

THE EQUIPMENT START-UP REPORT TO BE ISSUED BY EQUIPMENT MANUFACTURER.

3.04 GUARANTEE AND WARRANTIES

THE MANUFACTURER SHALL WARRANT ALL MATERIAL AND WORKMANSHIP FOR A PERIOD OF ONE (1) YEAR FROM START UP OR EIGHTEEN (18) MONTHS FROM DATE OF SHIPMENT WHICHEVER OCCURS FIRST. THE MANUFACTURER SHALL SUPPLY REPLACEMENT PARTS WITHIN THE YEAR WARRANTY PERIOD AND THE CONTRACTOR SHALL BE RESPONSIBLE FOR ANY REQUIRED LABOR, REFRIGERANT, CHEMICALS, FILTERS OR OTHER CONSUMABLES. ALL LABOR, REFRIGERANT AND FREIGHT DURING THE PERIOD OF ANY EXTENDED WARRANTY SHALL BE THE RESPONSIBILITY OF THE OWNER.

THE CONTRACTOR SHALL HAVE A QUALIFIED SERVICE TECHNICIAN AVAILABLE FOR EMERGENCY SERVICE DURING NORMAL BUILDING OCCUPANCY HOURS. HE SHALL MAKE SUCH EMERGENCY SERVICE CALLS WITHIN EIGHT (8) HOURS OF NOTIFICATION BY OWNER. IF CONTRACTOR DOES NOT HAVE SUCH SERVICE CAPABILITY WITHIN HIS OWN ORGANIZATION, HE SHALL CONTRACT WITH A SERVICE AGENCY APPROVED BY THE EQUIPMENT MANUFACTURER AND PROVIDE EVIDENCE OF SUCH CONTRACT TO THE OWNER PRIOR TO FINAL ACCEPTANCE. ALL EMERGENCY SERVICE SHALL BE SUPPLIED BY THE CONTRACTOR AT NO ADDITIONAL COST TO THE OWNER.

3.05 PROJECT SPECIFIC CHECKLIST:

1	Primary Variable Flow Design	Yes	No
2	Powder coated double wall (minimum 16 ga. exterior, 20 ga. interior) insulated enclosure and casing radiated sound pressure frequency report	Yes	No
3	1/4" welded steel treadplate plate floor	Yes	No
4	Lockable double wall doors	Yes	No
5	I beam or C channel base frame	Yes	No
6	Pitched membrane or standing seam roof	Yes	No
7	Exhaust fan mounted and ducted per ASHRAE standard 15	Yes	No
8	Interior 115v service plugs	Yes	No
9	Interior fluorescent/LED utility lights	Yes	No
10	Fan coils- for cooling interior of Pump Enclosure	Yes	No
11	Expansion tank, Armstrong	Yes	No
12	Trench drains at chiller and pumps	Yes	No
13	Chilled water pumps, Armstrong Series 4300	Yes	No
14	Single point factory mounted non-fused electrical connection 460/3/60 per electrical plans/schematics	Yes	No
15	Entire modular plant ETL labeled and listed per U.L. 1995	Yes	No
16	Factory start-up supervision after installation of PCP	Yes	No
17	Factory Rigging Assistance	Yes	No
18	Motor control center	Yes	No
19	110 volt transformer kit	Yes	No
22	Field installed controls with graphical HMI, BACnet interface to BAS		
24	Stainless steel, brass or copper fittings for gages	Yes	No
29	Unobstructed access to pumps for ease of maintenance	Yes	No
36	Glycol Management System (as applicable)	Yes	No
37	Pump alignment and submit report	Yes	No
38	Power disconnect on each chiller	Yes	No
39	Single point 4160/3/60 power feed to chiller starter	Yes	No
40	Pump Enclosure factory ISO 9001-2015 certified	Yes	No
41	Piping supported from above	Yes	No
42	Removable access panels or hinged doors for component access	Yes	No

Salas O'Brien
salasobrien.com
Dublin
2751 Tuller Pkwy
Dublin, OH 43017
Registration:

CONFIDENTIAL
THIS DRAWING AND ASSOCIATED DESIGN ELEMENTS ARE CONFIDENTIAL AND THE PROPERTY OF SALAS O'BRIEN, WHICH RETAINS ALL COMMON LAW, COPYRIGHT, STATUTORY AND OTHER RIGHTS THERETO. ANY UNAUTHORIZED USE, REUSE OR REPRODUCTION IS PROHIBITED. UNLESS OTHERWISE AGREED TO BY SALAS O'BRIEN, THIS DRAWING (AS WELL AS ANY COPIES) SHALL BE RETURNED TO SALAS O'BRIEN UPON REQUEST.

PROFESSIONAL SEAL

COLORADO LICENSED
MICHAEL P THOMPSON
53150
PROFESSIONAL ENGINEER
8/14/2023

ISSUE DATE	DESCRIPTION
08/01/2023	100% CD

2023-00034-00
HEALTHTRUST FACILITIGROUP

TMCA CATH LAB HVAC DEHUMIDIFICATION

1501 S. POTOMAC ST,
AURORA, CO 80012

REVISIONS

Δ	DESCRIPTION	DATE
0	ISSUED FOR CONSTRUCTION	08/01/23

CHECKED BY	DRAWN BY
EBM	KDR

SHEET NAME

PACKAGE PUMP HOUSE ENCLOSURE SPECIFICATIONS

SHEET NUMBER	REVISION
M-106	0

Autodesk Docs://080-2023-0034 TMCA Cathlab Dehumidification Upgrades/2023-00034 TMCA Cathlab-Mech_R22_R2.rvt
8/1/2023 11:40:34 AM

RSN 1743619 Permit #2023 2378137-LT

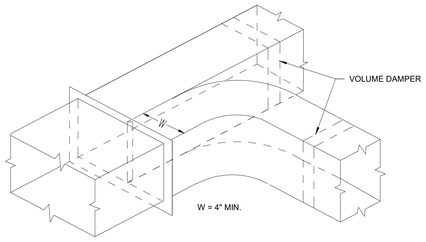

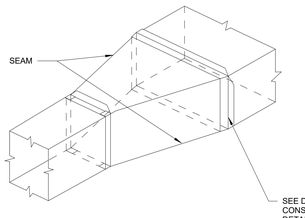

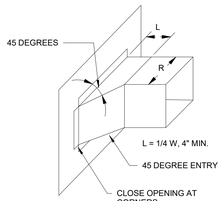

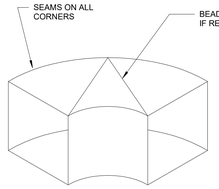

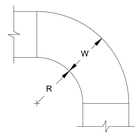

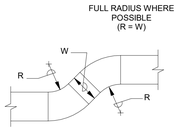

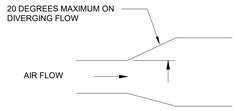

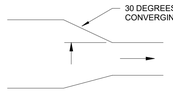

1 DUCT CONSTRUCTION

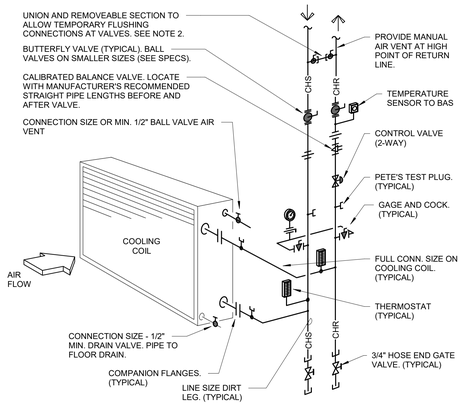

NOTES:

1. WATER SHALL ENTER COIL ON THE AIR LEAVING SIDE. OFFSET PIPING AS SHOWN TO ALLOW COIL PULL ACCESS WITHOUT DISMANTLING VERTICAL RISERS.
2. PROVIDE MINIMUM 2" FLUSH CONNECTION WITH 2" BALL VALVES. CONNECT TO SUPPLY AND RETURN MAINS WITH TEMPORARY FLUSH PIPE. PIPE MAY BE CLEAR PLASTIC SECURED WITH RADIATOR CLAMPS. AFTER FLUSHING REMOVE TEMPORARY PIPING, CAP EACH END OF PIPE, CLOSE FLUSHING VALVES AND REMOVE HANDLES.

2 CHILLED WATER AND 30% GLYCOL/WATER COIL PIPING DIAGRAM - 2-WAY VALVE

NOTE:

1. ELEVATED A/C UNIT SUFFICIENT DISTANCE ABOVE FLOOR OR ROOF TO ALLOW FOR INSTALLATION OF TRAP WITH ADEQUATE DIMENSIONS TO WITHSTAND SYSTEM OPERATING PRESSURE. COORDINATE WITH DETAIL FOR A/C UNIT MOUNTING.

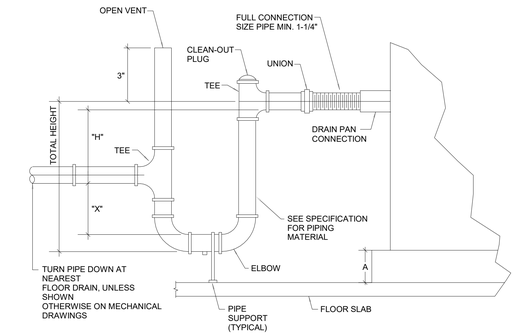

TOTAL HEIGHT OF TRAP = X+H+(1.5 x PIPE DIAMETER)

FOR DRAW THRU UNITS
X = MIN. 1H (PREFERRED 1.5 H)
H = NEGATIVE STATIC PRESSURE + 1"

A= HOUSE KEEPING PAD MINIMUM 4", ACTUAL PAD DIMENSION IS SUBJECT TO CALCULATION OF PIPE TRAP DEPTH ON A UNIT BY UNIT BASIS.

3 COOLING COIL CONDENSATE DRAIN

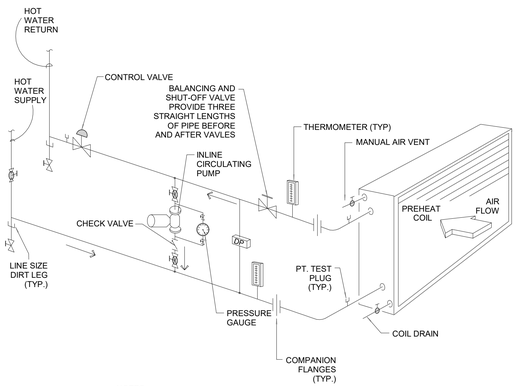

NOTES:

1. PROVIDE MANUAL AIR VENT AT HIGH POINT OF RETURN LINE.
2. WATER TO ENTER COIL ON AIR LEAVING SIDE OF COIL.

4 CL4 AHU PIPING AT PREHEAT HOT WATER COIL

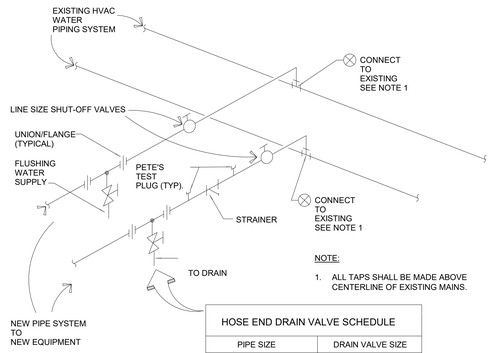

NOTE:

1. ALL TAPS SHALL BE MADE ABOVE CENTERLINE OF EXISTING MAINS.

HOSE END DRAIN VALVE SCHEDULE	
PIPE SIZE	DRAIN VALVE SIZE
UP TO 2"	¾"
2½" TO 4"	1¼"
5" TO 8"	2"
OVER 8"	2½"

5 PIPING CONNECTION DETAIL

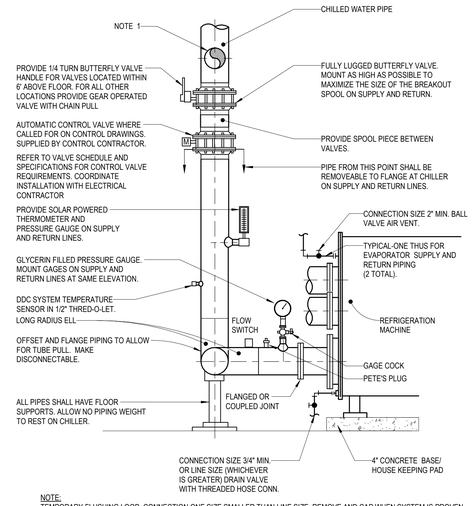

NOTE:
TEMPORARY FLUSHING LOOP, CONNECTION ONE SIZE SMALLER THAN LINE SIZE. REMOVE AND CAP WHEN SYSTEM IS PROVEN CLEAN FROM FLUSHING (CHILLED WATER SYSTEM ONLY).

6 CHILLED WATER PIPING AT REFRIGERATION MACHINE

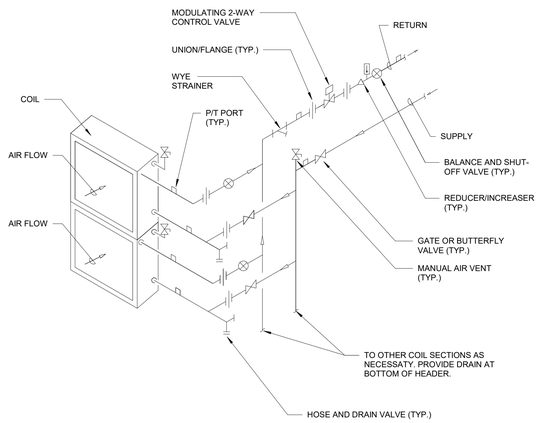

7 CL4 AHU HOT WATER AHU COIL HC2 PIPING DIAGRAM - 2-WAY VALVE

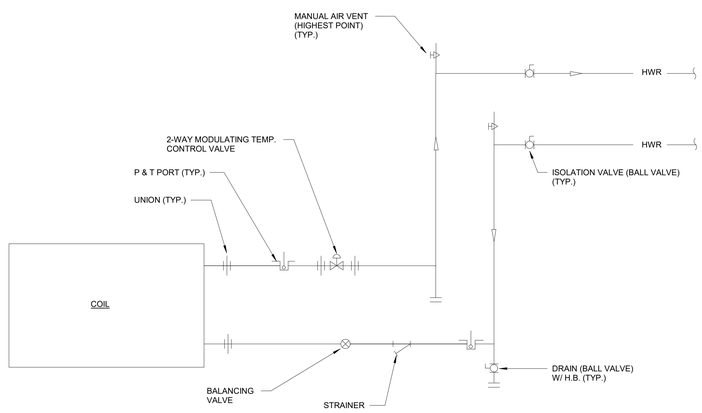

8 HOT WATER REHEAT COIL PIPING

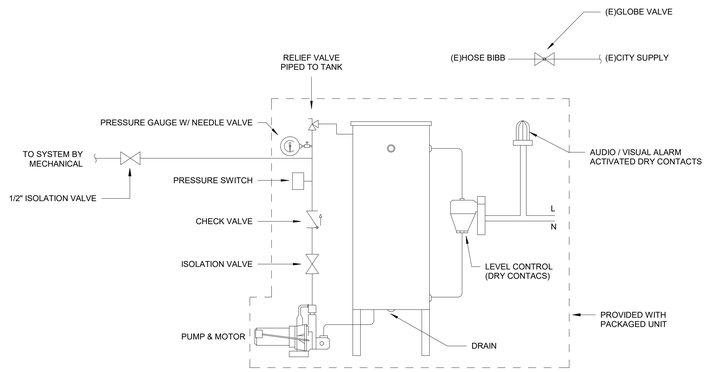

9 GLYCOL FEEDER SYSTEM DETAIL

City of Aurora Building Division
Reviewed for Code Compliance
Approved as Noted: Kirk Nagle
Date: Sep 08, 2023
2021 INTERNATIONAL CODES & 2023 NEC

Salas O'Brien
salasobrien.com
Dublin
2751 Tuller Pkwy
Dublin, OH 43017
Registration:

CONFIDENTIAL
THIS DRAWING AND ASSOCIATED DESIGN ELEMENTS ARE CONFIDENTIAL AND THE PROPERTY OF SALAS O'BRIEN, WHICH RETAINS ALL COMMON LAW, COPYRIGHT, STATUTORY AND OTHER RIGHTS THERETO. COPYING, USE OR DISCLOSURE WITHOUT PERMISSION IS PROHIBITED, UNLESS OTHERWISE AGREED TO BY SALAS O'BRIEN, THIS DRAWING (AS WELL AS ANY COPIES) SHALL BE RETURNED TO SALAS O'BRIEN UPON REQUEST.

PROFESSIONAL SEAL

COLORADO LICENSED MICHAEL P THOMPSON 50150 PROFESSIONAL ENGINEER
8/14/2023

ISSUE DATE	DESCRIPTION
08/01/2023	100% CD

2023-00034-00
HEALTHTRUST FACILITIGROUP

TMCA CATH LAB HVAC DEHUMIDIFICATION

1501 S. POTOMAC ST,
AURORA, CO 80012

REVISIONS

Δ	DESCRIPTION	DATE
0	ISSUED FOR CONSTRUCTION	08/01/23

CHECKED BY: EBM
DRAWN BY: KDR

SHEET NAME

MECHANICAL DETAILS

SHEET NUMBER: M-107
REVISION: 0

Autodesk Docs://050-2023-0034 TMCA Cathlab Dehumidification Upgrades/2023-00034 TMCA Cathlab-Mech_R22_R2.rvt
8/1/2023 11:40:36 AM

RSN 1743619 Permit #2023 2378137-LT

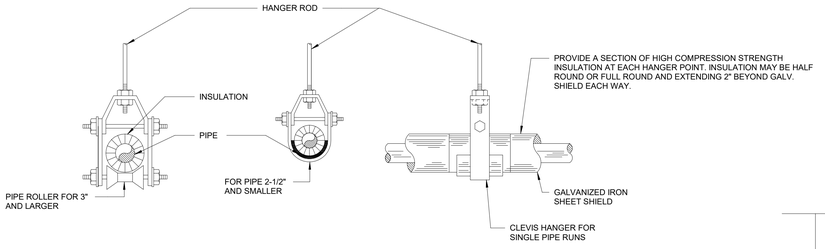

NOTE: PROVIDE SPRING VIBRATION INSOLATION HANGERS WITHIN MECHANICAL ROOMS

1 PIPE SUPPORT AND HANGERS

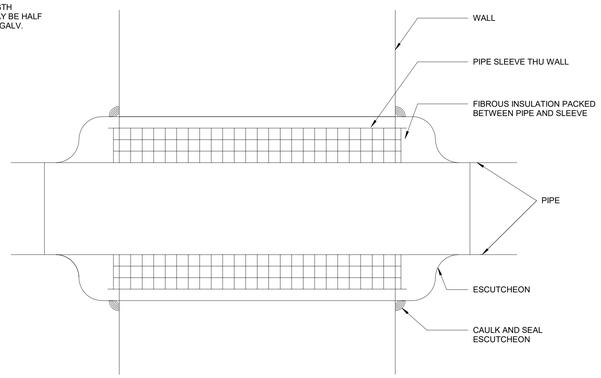

PIPE SHALL BE SUPORTED ON EITHER SIDE OF WALL. PIPE SUPPORT SHALL BE COMPLETELY INDEPENDANT OF WALL

2 PIPE THRU WALL

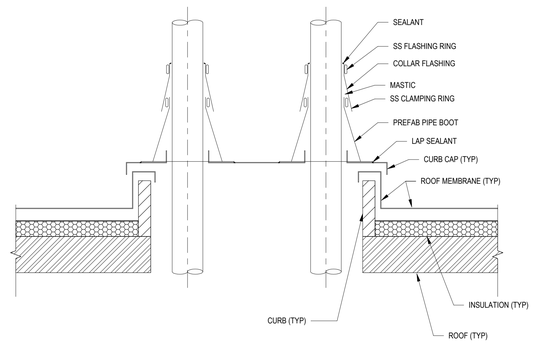

3 MULTIPLE PIPE ROOF PENETRATIONS

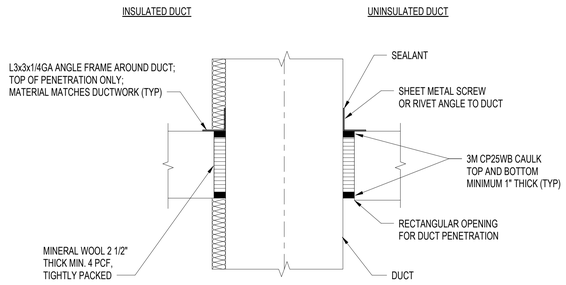

4 FIRE-RATED DUCT THROUGH FLOOR PENETRATION

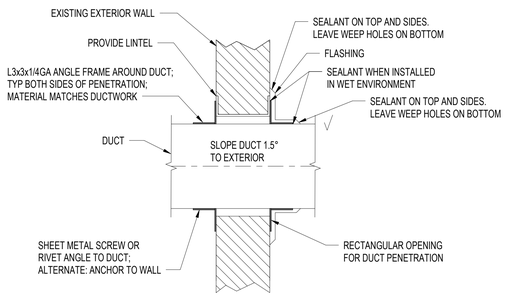

5 NON-RATED DUCT THROUGH WALL PENETRATION

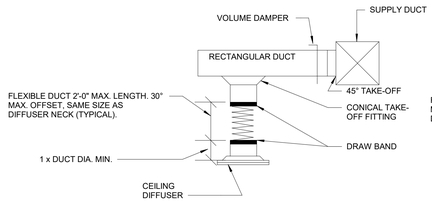

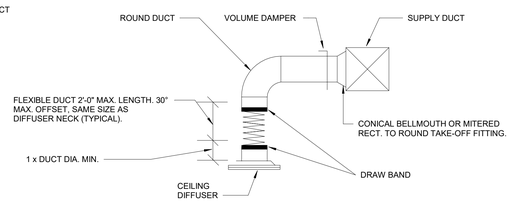

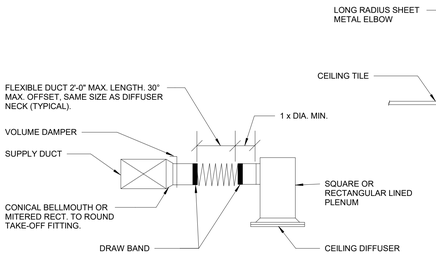

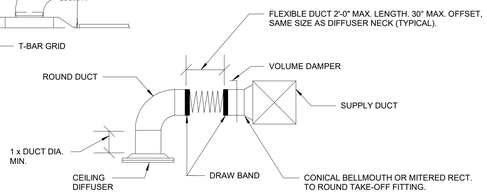

NOTES:

1. SPIN COLLARS SHALL NOT BE PERMITED.
2. SPECIAL CONDITIONS THAT CAN NOT MEET ONE OF THESE STANDARDS SHALL BE BROUGHT TO THE ENGINEER'S ATTENTION ON A CASE BY CASE BASIS.
3. DETAILS ILLUSTRATE INSTALLATION WITH ROUND NECK DIFFUSERS AND DUCTS. SQUARE OR RECTANGULAR NECK DIFFUSERS AND DUCTS SHALL BE SIMILAR.

6 TYPICAL DIFFUSER INSTALLATION DETAIL

City of Aurora Building Division
Reviewed for Code Compliance
Approved as Noted: Kirk Nagle
Date: Sep 08, 2023
2021 INTERNATIONAL CODES & 2023 NEC

Salas O'Brien
salasobrien.com
Dublin
2751 Tuller Pkwy
Dublin, OH 43017
Registration:

CONFIDENTIAL
THIS DRAWING AND ASSOCIATED DESIGN ELEMENTS ARE CONFIDENTIAL AND THE PROPERTY OF SALAS O'BRIEN, WHICH RETAINS ALL COMMON LAW, COPYRIGHT, STATUTORY AND OTHER RIGHTS THERETO. COPYING, USE OR DISCLOSURE WITHOUT PERMISSION IS PROHIBITED, UNLESS OTHERWISE AGREED TO BY SALAS O'BRIEN, THIS DRAWING (AS WELL AS ANY COPIES) SHALL BE RETURNED TO SALAS O'BRIEN UPON REQUEST.

PROFESSIONAL SEAL

COLORADO LICENSED
MICHAEL P THOMPSON
50150
PROFESSIONAL ENGINEER
8/14/2023

ISSUE DATE	DESCRIPTION
08/01/2023	100% CD

2023-00034-00
HEALTHTRUST FACILITIGROUP

TMCA CATH LAB HVAC DEHUMIDIFICATION

1501 S. POTOMAC ST,
AURORA, CO 80012

REVISIONS

Δ	DESCRIPTION	DATE
0	ISSUED FOR CONSTRUCTION	08/01/23

CHECKED BY EBM
DRAWN BY KDR

SHEET NAME

MECHANICAL DETAILS

SHEET NUMBER M-108
REVISION 0

Autodesk Docs://080-2023-0034 TMCA Cathlab Dehumidification Upgrades/2023-00034 TMCA Cathlab-Mech_R22_R2.rvt
8/1/2023 11:40:38 AM

This sheet of drawings has not been reviewed for code compliance.

GENERAL STRUCTURAL NOTES

1.0 STRUCTURAL ENGINEERING GENERAL REQUIREMENTS:

THE STRUCTURAL SCOPE OF WORK IS LIMITED TO THE NEW ROOF TOP STEEL DUNNAGE.

BUILDING CODE:

2021 EDITION OF THE INTERNATIONAL BUILDING CODE / ASCE/SEI 7-16

DESIGN CRITERIA / LOADS:

ALL COMPONENTS REQUIRING DESIGN BY THE CONTRACTOR AND THEIR SUBCONTRACTORS SHALL USE THE DESIGN CRITERIA DEFINED BELOW. ALL FORCES AND PRESSURES LISTED BELOW SHALL BE THE MINIMUM PERMISSIBLE UNLESS SUBSTANTIATING CALCULATIONS USING THE DESIGN CRITERIA SHOWN ARE PROVIDED TO THE FOR REVIEW AND ACCEPTANCE PRIOR TO FABRICATION.

RISK CATEGORY = IV

FLOOR:
MECHANICAL WALKWAY = 60 PSF

SNOW:
GROUND SNOW LOAD, Pg = 34 PSF
ROOF SNOW LOAD, Pf = 30 PSF (NON-REDUCIBLE)
SNOW DRIFT PER ASCE-7 (Ce = 0.9, Ct = 1.20, Cs = 1)
IMPORTANCE FACTOR, IV = 1.2

WIND DESIGN DATA:
RISK CATEGORY = IV
ULTIMATE DESIGN WIND SPEED, Vult = 120 MPH (3 SEC. GUST)
EQUIVALENT NOMINAL DESIGN WIND SPEED, Vasd = 90 MPH (3 SEC. GUST, USING I = 1.15)
EXPOSURE: ENCLOSED
MEAN ROOF HEIGHT USED FOR DESIGN, h = 16 FT
Kd = 0.85
Kzt = 1.0
VELOCITY PRESSURE CONSTANT = 0.83 X 0.00256 = 0.00213 (AMBIENT AIR DENSITY ADJUSTMENT)
INTERNAL PRESSURE COEFFICIENT, GCpi = ±0.18

SEISMIC DESIGN DATA:
RISK CATEGORY = IV
SEISMIC IMPORTANCE FACTOR, Ie = 1.5
Ss = 0.199, S1 = 0.056
SITE CLASS: D
SDS = 0.212, SD1 = 0.09
SEISMIC DESIGN CATEGORY C
ASCE CHAPTER 13
WIND CONTROLS

COORDINATION:

THESE DRAWINGS ARE A SCHEMATIC REPRESENTATION OF THE STRUCTURAL SYSTEM AND REQUIREMENTS FOR THE PROJECT, AND ARE ONLY A PORTION OF THE COMPLETE CONTRACT DOCUMENTS. THE STRUCTURAL SYSTEMS REQUIRE CAREFUL COORDINATION BETWEEN ALL STRUCTURAL COMPONENTS AND MATERIALS SHOWN IN THESE STRUCTURAL DRAWINGS, AND CAREFUL COORDINATION OF INFORMATION SHOWN ON OTHER DISCIPLINES' DRAWINGS IN ORDER TO BE CONSTRUCTED. THE CONTRACTOR SHALL COORDINATE CONSTRUCTION OPERATIONS WITH ALL SUBCONTRACTORS AND OTHER RELATED ENTITIES TO ENSURE EFFICIENT AND ORDERLY INSTALLATION OF EACH PART OF THE WORK. EACH CONTRACTOR SHALL COORDINATE ITS OPERATIONS WITH THE OPERATIONS OF OTHER CONTRACTORS FOR PROPER INSTALLATION, CONNECTION AND OPERATION.

EXISTING CONDITIONS:

CONTRACTOR SHALL VERIFY ALL EXISTING CONDITIONS PRIOR TO CONSTRUCTION. ANY VARIANCE FROM CONDITIONS SHOWN ON THESE DRAWINGS MUST BE BROUGHT TO THE ATTENTION OF THE ENGINEER IMMEDIATELY.

SHOP DRAWINGS/SUBMITTALS:

SHOP DRAWINGS SHALL BE SUBMITTED FOR ALL STRUCTURAL ITEMS IN ADDITION TO ITEMS REQUIRED BY ARCHITECTURAL SPECIFICATIONS. THE STRUCTURAL SHOP DRAWING REVIEW IS INTENDED TO HELP THE ENGINEER VERIFY THE DESIGN CONCEPT. THE CONTRACTOR SHALL REVIEW ALL SHOP DRAWINGS PRIOR TO SUBMITTAL. ITEMS NOT IN ACCORDANCE WITH CONTRACT DOCUMENTS SHALL BE IDENTIFIED UPON HIS REVIEW AND REVISED PRIOR TO FORWARDING TO ARCHITECT. THE STRUCTURAL SHOP DRAWINGS WILL BE RETURNED FOR RESUBMITTAL IF A CURSORY REVIEW SHOWS MAJOR ERRORS WHICH SHOULD HAVE BEEN FOUND BY THE CONTRACTOR'S CHECKING.

VERIFY ALL DIMENSIONS WITH ARCHITECT AND ALL FINISHED GRADE WITH CIVIL DRAWINGS.

ANY CHANGES, SUBSTITUTIONS, OR DEVIATIONS FROM CONTRACT DOCUMENTS SHALL BE CLOUDED BY MANUFACTURER OR FABRICATOR. ANY OF THE AFOREMENTIONED WHICH ARE NOT CLOUDED OR FLAGGED BY SUBMITTING PARTIES, SHALL NOT BE CONSIDERED APPROVED AFTER ENGINEER'S REVIEW, UNLESS NOTED ACCORDINGLY.

THE ENGINEER HAS THE RIGHT TO APPROVE OR DISAPPROVE ANY CHANGES TO CONTRACT DOCUMENTS AT ANY TIME BEFORE OR AFTER SHOP DRAWING REVIEW.

THE SHOP DRAWINGS DO NOT REPLACE THE CONTRACT DOCUMENTS. ITEMS OMITTED OR SHOWN INCORRECTLY AND ARE NOT FLAGGED BY THE STRUCTURAL ENGINEER OR ARCHITECT ARE NOT TO BE CONSIDERED CHANGES TO CONTRACT DOCUMENTS. IT IS THE CONTRACTOR'S RESPONSIBILITY TO MAKE SURE ITEMS ARE CONSTRUCTED TO CONTRACT DOCUMENTS.

THE ADEQUACY OF ENGINEERING DESIGNS AND LAYOUT PERFORMED BY OTHERS RESTS WITH THE DESIGNING OR SUBMITTING AUTHORITY.

REVIEWING IS INTENDED ONLY AS AN AID TO THE CONTRACTOR IN OBTAINING CORRECT SHOP DRAWINGS. RESPONSIBILITY FOR CORRECTNESS SHALL REST WITH THE CONTRACTOR.

REPRODUCTION OF ANY PORTION OF THE CONTRACT DOCUMENTS FOR USE IN SUBMITTALS IS NOT PERMITTED AND MAY RESULT IN REJECTION.

GENERAL REQUIREMENTS:

ENTIRE CONTRACT DOCUMENTS SHALL BE USED TO BUILD BUILDING. SOME CRITICAL ITEMS REQUIRED BY OTHER DISCIPLINES MAY NOT BE SHOWN ON STRUCTURAL DRAWING (i.e. WALL, FLOOR AND ROOF OPENING, ARCHITECTURAL, MECHANICAL AND PLUMBING LOADS, SUPPORT PLATES ETC.). IT IS THE CONTRACTOR'S SOLE RESPONSIBILITY TO PERFORM CAREFUL COORDINATION BETWEEN TRADES DURING CONSTRUCTION.

WHERE DISCREPANCIES OCCUR BETWEEN PLANS, DETAILS, GENERAL STRUCTURAL NOTES AND SPECIFICATIONS, THE MORE STRINGENT REQUIREMENTS SHALL GOVERN. SPECIFIC DETAILS ON DRAWINGS SHALL TAKE PRECEDENCE OVER TYPICAL DETAILS AND GENERAL STRUCTURAL NOTES. BRING ALL DISCREPANCIES TO THE ATTENTION OF THE ENGINEER IMMEDIATELY UPON DISCOVERY.

DO NOT SCALE DRAWINGS FOR THE PURPOSE OF ESTABLISHING DIMENSIONS OF ANY KIND.

ALL PROPRIETARY ITEMS, MATERIALS AND COMPONENTS SHALL BE INSTALLED IN STRICT ACCORDANCE WITH THE MANUFACTURER'S INSTRUCTIONS, GUIDELINES AND/OR RECOMMENDATIONS.

ITEMS SHOWN BY OTHER DISCIPLINES WITH REFERENCE TO STRUCTURAL DRAWING BUT NOT SHOWN ON THESE STRUCTURAL DOCUMENTS SHALL BE CONSIDERED DESIGN BUILD ITEMS AND COSTS REQUIRED FOR THESE ITEMS SHALL BE INCLUDED IN CONTRACTOR'S PRICING EXERCISES AND BID. CONTRACTOR SHALL SUBMIT DESIGN BY OTHERS FOR REVIEW.

THE STRUCTURAL CONSTRUCTION DOCUMENTS REPRESENT THE FINISHED STRUCTURE. THEY DO NOT INDICATE THE METHOD OF CONSTRUCTION. THE CONTRACTOR SHALL PROVIDE ALL MEASURES NECESSARY TO PROTECT THE STRUCTURE DURING CONSTRUCTION. SUCH MEASURES SHALL INCLUDE, BUT NOT BE LIMITED TO, BRACING, SHORING FOR LOADS DUE TO CONSTRUCTION EQUIPMENT, ETC. THE STRUCTURAL ENGINEER SHALL NOT BE RESPONSIBLE FOR THE CONTRACTOR'S MEANS, METHODS, TECHNIQUES, SEQUENCES FOR PROCEDURE OF CONSTRUCTION, OR THE SAFETY PRECAUTIONS AND THE PROGRAMS INCIDENT THERETO, NOR SHALL OBSERVATION VISITS TO THE SITE INCLUDE INSPECTION OF THESE ITEMS.

CONSTRUCTION MATERIALS SHALL BE SPREAD OUT IF PLACED ON FRAMED CONSTRUCTION. LOAD SHALL NOT EXCEED THE DESIGN LIVE LOAD PER SQUARE FOOT.

WHERE REFERENCE IS MADE TO VARIOUS TEST STANDARDS FOR MATERIALS, SUCH STANDARDS SHALL BE THE LATEST EDITION AND/OR ADDENDA.

ESTABLISH AND VERIFY ALL OPENINGS AND INSERTS FOR ARCHITECTURAL, MECHANICAL, PLUMBING AND ELECTRICAL WITH APPROPRIATE TRADES, DRAWINGS AND SUBCONTRACTORS PRIOR TO CONSTRUCTION. SHOW PENETRATIONS AND BLOCKOUT LOCATIONS ON SHOP DRAWINGS AND OTHER SUBMITTALS PRIOR TO ENGINEER'S REVIEW.

OPTIONS ARE FOR CONTRACTOR'S CONVENIENCE. IF HE CHOOSES AN OPTION, CONTRACTOR SHALL BE RESPONSIBLE FOR ALL NECESSARY CHANGES AND SHALL COORDINATE ALL DETAILS.

NOTES AND DETAILS ON DRAWINGS SHALL TAKE PRECEDENCE OVER GENERAL STRUCTURAL NOTES AND TYPICAL DETAILS. TYPICAL DETAILS MAY NOT NECESSARILY BE CUT ON PLANS, BUT APPLY UNLESS NOTED OTHERWISE. WHERE NO DETAILS ARE SHOWN, CONSTRUCTION SHALL CONFORM TO SIMILAR WORK ON THE PROJECT.

DETAILS INDICATED AS TYPICAL (i.e., TYP) APPLY TO ALL SIMILAR CONDITIONS.

SOME DETAILS ARE DEFINED AS TYPICAL TO THE PROJECT AND NOT NECESSARILY CUT OR CALLED OUT ON PLANS. IT IS THE CONTRACTOR'S RESPONSIBILITY TO APPLY AND COORDINATE THESE DETAILS WITH CONDITIONS DEFINED THROUGHOUT THE CONTRACT DOCUMENTS AS REQUIRED.

ALL DIMENSIONS SHOWN (INCLUDING ELEVATIONS) ON STRUCTURAL DRAWINGS ARE TO ASSIST CONTRACTOR IN VERIFICATION.

CONTRACTOR SHALL BE RESPONSIBLE FOR VERIFICATION OF ALL DIMENSIONS WITH ARCHITECTURAL DRAWINGS PRIOR TO START OF CONSTRUCTION – RESOLVE ANY DISCREPANCY WITH THE ARCHITECT. CONTRACTOR SHALL COORDINATE ALL FINISHED GRADE ELEVATIONS SHOWN IN CIVIL DRAWINGS WITH MINIMUM FOOTING DEPTHS SHOWN IN STRUCTURAL DRAWINGS – NOTIFY ENGINEER OF ANY DISCREPANCY PRIOR TO START OF CONSTRUCTION.

ANY ENGINEERING DESIGN, PROVIDED BY OTHERS AND SUBMITTED FOR REVIEW, SHALL BEAR THE SEAL OF AN ENGINEER REGISTERED IN THE STATE OF THE PROJECT.

SUPPLIER OF ENGINEERED STRUCTURAL COMPONENTS (i.e. STEEL JOISTS, STAIRS, PRECAST ITEMS) SHALL BE RESPONSIBLE FOR COMPLETE DESIGN AND SHALL USE ENTIRE CONTRACT DOCUMENTS TO INCLUDE ALL LOADS AND DETAIL REQUIREMENTS FROM ALL DISCIPLINES. SUPPLIER SHALL PROVIDE ADDITIONAL MATERIAL REQUIRED TO MEET ALL THEIR REQUIREMENTS FOR INSTALLATION (i.e. WIDER BEARING PLATES, SHIMS, ERECTION BOLTS ETC.).

STRUCTURAL STEEL SUPPLIER SHALL FURNISH BOLTS FOR OSHA CONNECTIONS.

SPECIAL INSPECTION:

THE OWNER SHALL EMPLOY ONE OR MORE SPECIAL INSPECTORS OR AGENCIES WHO SHALL PROVIDE INSPECTIONS DURING CONSTRUCTION FOR THE ITEMS LISTED BELOW. THE CONTRACTOR SHALL COOPERATE WITH THE SPECIAL INSPECTOR AND SHALL FURNISH TOOLS, EQUIPMENT AND ASSISTANCE AS REQUESTED. THE CONTRACTOR SHALL NOTIFY THE INSPECTOR AT LEAST 24 HOURS PRIOR TO EXPECTED TIME FOR OPERATIONS REQUIRING TESTING OR INSPECTION SERVICES. THE INSPECTOR SHALL FAMILIARIZE HIMSELF WITH ALL APPLICABLE PORTIONS OF THE CONTRACT DOCUMENTS PERTAINING TO THE AREA OF INVESTIGATION PRIOR TO PERFORMING SERVICES. COMPENSATION FOR SPECIAL INSPECTION SERVICES SHALL BE PROVIDED BY THE OWNER.

THE ENGINEER IS NOT THE SPECIAL INSPECTOR, AND SHALL NOT PERFORM THESE SERVICES.

INSPECTION BY THE OWNER OR OWNER'S AGENT DOES NOT RELIEVE THE CONTRACTOR OF HIS RESPONSIBILITY TO PERFORM THE WORK IN ACCORDANCE WITH THE CONTRACT DOCUMENTS.

PER IBC SECTION 1704, SPECIAL INSPECTION IS REQUIRED FOR THE ITEMS DEFINED IN THE SPECIAL INSPECTION MATRIX FOR EACH TYPE OF CONSTRUCTION IN THESE STRUCTURAL CONSTRUCTION DOCUMENTS.

DUTIES AND RESPONSIBILITIES OF THE SPECIAL INSPECTOR:
A) THE SPECIAL INSPECTOR SHALL OBSERVE THE WORK ASSIGNED TO BE CERTAIN IT CONFORMS WITH THE APPROVED DESIGN DRAWINGS AND SPECIFICATION.
B) THE SPECIAL INSPECTOR SHALL FURNISH INSPECTION REPORTS TO THE BUILDING OFFICIAL, AND TO THE ENGINEER OR ARCHITECT OF RECORD. ALL DISCREPANCIES SHALL BE BROUGHT TO THE IMMEDIATE ATTENTION OF THE CONTRACTOR FOR CORRECTION, THEN, IF UNCORRECTED, TO THE DESIGN AUTHORITY AND THE BUILDING OFFICIAL.
C) UPON COMPLETION OF THE WORK THE SPECIAL INSPECTOR SHALL COMPLETE AND SIGN THE APPROPRIATE FORMS CERTIFYING THAT TO THE BEST OF THEIR KNOWLEDGE THE WORK IS IN CONFORMANCE WITH THE APPROVED PLANS AND SPECIFICATIONS AND THE APPLICABLE WORKMANSHIP PROVISIONS OF THE CODE.

ALL TEST & INSPECTION REPORTS SHALL BE COPIED TO THE STRUCTURAL ENGINEER WITHIN 3 DAYS OF INSPECTION OR TEST.

5.0 METALS:

STRUCTURAL STEEL:

ALL WORK SHALL CONFORM TO THE LATEST EDITION OF AISC MANUAL OF STEEL CONSTRUCTION, AND LATEST EDITION OF AWS D1.1, UNLESS MORE STRINGENT REQUIREMENTS ARE DEFINED ELSEWHERE IN THE CONTRACT DOCUMENTS. UNLESS AN ACTIVITY OR DUTY IS SPECIFICALLY IDENTIFIED AS BEING PERFORMED BY THE PROJECT STRUCTURAL ENGINEER OF RECORD IN OSHA SUBPART R, IT WILL NOT BE PERFORMED BY THE ENGINEER. IT IS TO BE PERFORMED BY OTHERS.

ALL STRUCTURAL STEEL SHALL BE ASTM A992 (Fy = 50 KSI). ALL CHANNELS, ANGLES, AND PLATES SHALL BE ASTM A36 (Fy = 36 KSI). ALL PIPE STEEL SHALL BE ASTM A501 (Fy = 36 KSI) OR ASTM A53, TYPE E OR S, GRADE B (Fy = 35 KSI). ALL TUBE STEEL SHALL BE ASTM A500 (Fy = 46 KSI). ALL ANCHOR RODS SHALL BE ASTM F1554, GRADE 36 UNLESS NOTED OTHERWISE.

ALL REFERENCE TO HEADED STUDS SHALL BE HIGH STRENGTH HEADED STUDS. ATTACHMENT OF HEADED STUDS SHALL CONFORM TO ALL REQUIREMENTS OF THE LATEST EDITION OF THE "RECOMMENDED PRACTICES FOR STUD WELDING" AND THE "STRUCTURAL WELDING CODE" PUBLISHED BY AWS.

ALL BOLTS, ANCHOR BOLTS, EXPANSION BOLTS, ETC. SHALL BE INSTALLED WITH STEEL WASHERS AT FACE OF WOOD OR AT SLOTTED HOLES IN STEEL SECTIONS.

ALL WELDING SHALL BE PERFORMED BY WELDERS HOLDING VALID CERTIFICATES AND HAVING CURRENT EXPERIENCE IN THE TYPE OF WELD SHOWN ON THE DRAWINGS OR NOTES. CERTIFICATES SHALL BE THOSE ISSUED BY AN ACCEPTED TESTING AGENCY. ALL WELDING DONE BY E70 SERIES LOW HYDROGEN RODS UNLESS NOTED OTHERWISE. FOR GRADE 60 REINFORCING BARS, USE E90 SERIES. ALL WELDING PER LATEST AMERICAN WELDING SOCIETY STANDARDS, (EXCEPT STEEL JOISTS AND JOIST GIRDERS SHALL COMPLY WITH SJI STANDARDS). SHOP WELDS AND FIELD WELDS SHALL BE SHOWN ON THE SHOP DRAWINGS SUBMITTED FOR REVIEW. ALL FULL (COMPLETE) PENETRATION WELDS SHALL BE TESTED AND CERTIFIED BY AN INDEPENDENT TESTING LABORATORY.

FILLET WELD SIZES SHOWN IN CONTRACT DOCUMENTS ARE THE FILLET WELD LEG SIZE. GROOVE WELD SIZES SHOWN IN CONTRACT DOCUMENTS ARE THE REQUIRED WELD SIZE "(E)".

THE ENGINEER SHALL BE COMPENSATED FOR ANY ANALYSIS, RE-DESIGN AND/OR REVIEW OF CONNECTIONS NOT CONFORMING TO THE CONTRACT DOCUMENTS, WHETHER MADE BY THE CONTRACTOR, THEIR SUBCONTRACTOR(S), FABRICATOR, DETAILER OR ERECTOR.

CONTRACTOR SHALL NOT RECEIVE ADDITIONAL COMPENSATION FOR DETAILING, FABRICATION, ERECTION OR SCHEDULE IMPACTS AS A RESULT OF INCORRECT DETAILING IN THE SHOP DRAWINGS.

HIGH STRENGTH BOLTS:

ALL HIGH STRENGTH BOLTS SHALL BE ASTM 7/8" DIAMETER A325 AND SHALL BE INSTALLED AS BEARING-TYPE CONNECTIONS WITH THREADS INCLUDED IN SHEAR PLANE (I.E. A TYPE "N" CONNECTION) UNLESS NOTED OTHERWISE. UNLESS SPECIFICALLY NOTED OTHERWISE IN THESE STRUCTURAL DRAWINGS, ALL A325 HIGH STRENGTH BOLTS SHALL BE TENSIONED TO THE VALUES SHOWN IN TABLE J3.1 OF THE AISC SPECIFICATION FOR STEEL BUILDINGS, USING ANY AISC APPROVED METHOD. ALL HIGH STRENGTH BOLTING SHALL BE INSPECTED BY AN INDEPENDENT TESTING LABORATORY.

DRYPACK:

DRYPACK SHALL BE 5,000 PSI NON-SHRINK GROUT, FIVE STAR OR EQUIVALENT. INSTALL DRYPACK UNDER BEARING PLATES BEFORE FRAMING MEMBER IS INSTALLED. AT COLUMNS, INSTALL DRYPACK UNDER BASE PLATES AFTER COLUMN HAS BEEN PLUMBED BUT PRIOR TO FLOOR OR ROOF INSTALLATION.

METALS SUBMITTALS:

THE FOLLOWING ITEMS SHALL BE SUBMITTED FOR REVIEW FOR THE LIMITED PURPOSE OF CHECKING FOR CONFORMANCE WITH INFORMATION GIVEN AND THE DESIGN CONCEPT EXPRESSED IN THE CONTRACT DOCUMENTS. REFER TO PROJECT SPECIFICATIONS FOR ADDITIONAL REQUIRED SUBMITTALS.

PRODUCT DATA
SHOP DRAWINGS
STRUCTURAL STEEL
WELDING PROCEDURE SPECIFICATIONS AND PROCEDURE QUALIFICATION RECORDS
QUALIFICATION DATA FOR QUALIFIED INSTALLER, FABRICATOR, PROFESSIONAL ENGINEER, TESTING AGENCY
WELDING CERTIFICATES
MILL TEST REPORTS
PRODUCT TEST REPORTS
SOURCE QUALITY CONTROL REPORTS

ABBREVIATIONS

AFF	ABOVE FINISHED FLOOR	IFW	INSIDE FACE OF WALL
ALT	ALTERNATE	IT	PRECAST INVERTED TEE BEAM
AB	ANCHOR BOLT	K (KIP)	1000 POUNDS
ADD'L	ADDITIONAL	LB	PRECAST ELL BEAM
ARCH	ARCHITECT	LBS (#)	POUNDS
ARCH'L	ARCHITECTURAL	LL	LIVE LOAD
@	AT (MEASUREMENT)	LLH	LONG LEG HORIZONTAL
BM	BEAM	LLV	LONG LEG VERTICAL
BFF	BELOW FINISHED FLOOR	LOC	LOCATION
BOB	BOTTOM OF BEAM	LVL	LAMINATED VENEER LUMBER
BOD	BOTTOM OF DECK	MAS	MASONRY
BOF	BOTTOM OF FOOTING	MAS CJ	MASONRY CONTROL JOINT
BOT (B)	BOTTOM	MAX	MAXIMUM
BRG	BEARING	MBM	METAL BUILDING MANUFACTURER
CFS	COLD FORMED STEEL	MECH'L	MECHANICAL
CGS	CENTER OF GRAVITY STRAND	MFR('S)	MANUFACTURER('S)
CIP	CAST IN PLACE	MIN	MINIMUM
CL	CENTERLINE	MPII	MFR PRINTED INSTALLATION INSTRUCTIONS
CJ	CONTROL JOINT	N/A	NOT APPLICABLE
CJP	COMPLETE JOINT PENETRATION	NTS	NOT TO SCALE
		NSNM	NON-SHRINK NON-METALLIC
CTR'D	CENTERED	OC	ON CENTER
CLB	CENTERLINE OF BEAM	OFW	OUTSIDE FACE OF WALL
CLC	CENTERLINE OF COLUMN	OH	OPPOSITE HAND
CLF	CENTERLINE OF FOOTING	OPP	OPPOSITE
CLW	CENTERLINE OF WALL	OPNG	OPENING
CLR	CLEAR	OS	OVERSIZED
COL	COLUMN	OSB	ORIENTED STRAND BOARD
CONC	CONCRETE	PAF	POWDER ACTUATED FASTENER
CMU	CONCRETE MASONRY UNIT	PC	PRECAST CONCRETE
CONN	CONNECTION	PEMB	PRE-ENGINEERED METAL BUILDING
CONT	CONTINUOUS	PFWT	PREFABRICATED WOOD TRUSS
d	PENNY (SIZE)	PJ	PANEL JOINT
DAS	DEFORMED ANCHOR STUD	PL	PLATE
DEG	DEGREE	PLF	POUNDS PER LINEAR FOOT
DIA	DIAMETER	PLWD	PLYWOOD
DL	DEAD LOAD	PREFAB	PREFABRICATED
DP	DEEP OR DRILLED PIER	PSF	POUNDS PER SQUARE FOOT
DN	DOWN	PSI	POUNDS PER SQUARE INCH
DTL	DETAIL	PT	POST TENSION
DWG(S)	DRAWING(S)	PTL	PRESSURE TREATED LUMBER
EA	EACH	RB	PRECAST RECTANGLE BEAM
EC	EPOXY COATED	RE:	REFERENCE
EE	EACH END	REINF	REINFORCING
EL	ELEVATION	REQ'D	REQUIRED
ENGR	ENGINEER	RS	ROUGH SAWN
EOS	EDGE OF SLAB	SCHED	SCHEDULE
EQ	EQUAL	SLH	SHORT LEG HORIZONTAL
EQUIP	EQUIPMENT	SLV	SHORT LEG VERTICAL
EXIST (E)	EXISTING	SIM	SIMILAR
EXP ANCH	EXPANSION ANCHOR	SOG	SLAB ON GRADE
EXP JT (EJ)	EXPANSION JOINT	SOV	SLAB ON VOID
EW	EACH WAY	SQ	SQUARE
FDN	FOUNDATION	STD	STANDARD
FF	FINISHED FLOOR	STL	STEEL
FOM	FACE OF MEMBER	T&B	TOP AND BOTTOM
FOW	FACE OF WALL	TL	TOTAL LOAD
FP	FIRE PROOFING	TJI	PLYWOOD WEB JOIST
FTG	FOOTING	TOB	TOP OF BEAM
FV	FIELD VERIFY	TOC	TOP OF CONCRETE
GA	GAGE	TOD	TOP OF DECK
GALV	GALVANIZED	TOF	TOP OF FOOTING
GSN	GENERAL STRUCTURAL NOTES	TOL	TOP OF LEDGER
GLB (GLULAM)	GLUED-LAMINATED BEAM	TOM	TOP OF MASONRY
GT	GIRDER TRUSS	TOP	TOP OF PLATE
HC	PRECAST HOLLOW CORE PLANK	TOS	TOP OF STEEL
HDAS	HEADED ANCHOR STUD	TOW	TOP OF WALL
HDG	HOT-DIP GALVANIZED	TYP	TYPICAL
HK	HOOK	UNO	UNLESS NOTED OTHERWISE
HORIZ	HORIZONTAL	VERT	VERTICAL
HT	HEIGHT	WP	WORK POINT
		WWF	WELDED WIRE FABRIC
		W/ (w/)	WITH
		W/O (w/o)	WITHOUT

NOTES

1. FOR MATERIAL STRENGTHS, SEE GENERAL STRUCTURAL NOTES.
2. VERIFY ALL DIMENSIONS WITH ARCHITECTURAL DRAWINGS PRIOR TO START OF CONSTRUCTION - RESOLVE ANY DISCREPANCIES WITH ARCHITECT.
3. FOR CLARITY, ALL EXTERIOR SLABS AND SIDEWALKS MAY NOT BE SHOWN. FOR EXACT DIMENSIONS, LOCATIONS, JOINT AND SCORE LINES, SEE ARCHITECTURAL DRAWINGS.
4. FOR CLARITY, ALL OPENINGS MAY NOT BE SHOWN ON FRAMING PLANS. FOR EXACT SIZE, NUMBER, AND LOCATION OF OPENINGS, SEE ARCHITECTURAL, MECHANICAL, ELECTRICAL AND PLUMBING DRAWINGS. FOR FRAMING AT OPENINGS, SEE TYPICAL STRUCTURAL DETAILS. VERIFY ALL SIZES, WEIGHTS AND LOCATIONS OF MECHANICAL EQUIPMENT WITH MECHANICAL ENGINEER AND MECHANICAL CONTRACTOR THROUGH ARCHITECT.
5. DETAILS MARKED "TYPICAL" MAY NOT BE CUT ON PLANS.
6. CONC C.J. - SHALL BE EITHER KEYED OR SAW CUT CONTROL JOINT IN SLAB ON GRADE AT CONTRACTOR'S OPTION, SEE GENERAL STRUCTURAL NOTES AND PLANS.
7. MAS C.J. - PROVIDE MASONRY CONTROL JOINT IN MASONRY WALL PER G.S.N. AND TYPICAL DETAIL.
8. FOR CLARITY, DETAILS MAY SHOW ONLY ONE SIDE OF FRAMING CONDITION.
9. CONTRACTOR TO VERIFY, AND BE RESPONSIBLE FOR VARIATIONS IN CONCRETE QUANTITY DUE TO CAMBER, CONSTRUCTION DEAD LOAD DEFLECTIONS AND/OR TOLERANCES OF STRUCTURAL STEEL ELEMENTS (i.e. BEAMS, STEEL DECK, ETC.) AND PRECAST CONCRETE ELEMENTS.
10. ALL SCHEDULE MARK DESIGNATIONS MAY NOT NECESSARILY BE FOUND ON THE PLANS WHERE THE SCHEDULES OCCUR. SCHEDULES ARE TYPICAL TO THE PROJECT.

INFORMATION ON DRAWINGS

PLAN LEGEND

SYMBOL	DESCRIPTION	REMARKS
X / X (circle)	DETAIL CUTS SHOWN ON PLANS	
	CONCRETE WALL UNO	SEE PLANS AND SCHEDULES FOR REINFORCING
	8" MASONRY WALL UNO	OTHER SIZES ARE DIMENSIONED ON PLANS.
	12" MASONRY WALL UNO	OTHER SIZES ARE DIMENSIONED ON PLANS.
	STUD WALL UNO	SEE GSN, PLANS, AND SCHEDULES FOR SIZE AND SPACING OF STUDS.
	MECHANICAL EQUIPMENT	SEE PLANS FOR UNIT WEIGHTS.
	OPENING IN FRAMING	SEE NOTE #4.
Beam Type AT XX" O.C.	INDICATES EXTENTS OF MEMBER	SEE PLANS.

SHEET INDEX

SHEET	DESCRIPTION
S-001	GENERAL STRUCTURAL NOTES
S-002	SPECIAL INSPECTIONS
S-021	PARTIAL SECOND FLOOR ROOF PLAN

Salas O'Brien
salasobrien.com
Lakewood
165 S. Union Blvd
Lakewood, CO 80228
Registration:

CONFIDENTIAL
THIS DRAWING AND ASSOCIATED DESIGN ELEMENTS ARE CONFIDENTIAL AND THE PROPERTY OF SALAS O'BRIEN, WHICH RETAINS ALL COMMON LAW, COPYRIGHT, STATUTORY AND OTHER RIGHTS THERETO. ANY UNAUTHORIZED USE, REUSE OR REPRODUCTION IS PROHIBITED. UNLESS OTHERWISE AGREED TO BY SALAS O'BRIEN, THIS DRAWING (AS WELL AS ANY COPIES) SHALL BE RETURNED TO SALAS O'BRIEN UPON REQUEST.

PROFESSIONAL SEAL

ISSUE DATE	DESCRIPTION
7/12/2023	90% CD

2023-00034
HCA FACILITIGROUP

TMCA CATH LAB HVAC DEHUMIDIFICATION

AURORA, CO

REVISIONS

Δ	DESCRIPTION	DATE
Ø	ISSUE FOR CONSTRUCTION	8/11/2023

CHECKED BY	DRAWN BY
RL	SB

SHEET NAME
GENERAL STRUCTURAL NOTES

SHEET NUMBER	REVISION
S-001	Ø

Autodesk Docs://080-2023-0034 TMCA Cathlab Dehumidification Upgrades/2023-00034 TMCA Cathlab-Struct_R22.rvt
8/9/2023 3:56:18 PM

RSN 1743619 Permit #2023 2378137-LT

STRUCTURAL STEEL CONSTRUCTION OTHER THAN STRUCTURAL STEEL REFERENCE: IBC TABLE 1705.2.2	EXTENT OF SERVICE (CONTINUOUS OR PERIODIC)	
1. MATERIAL VERIFICATION OF COLD-FORMED STEEL DECK: A. IDENTIFICATION MARKINGS TO CONFORM TO ASTM STANDARDS SPECIFIED IN THE APPROVED CONSTRUCTION DOCUMENTS. B. MANUFACTURER'S CERTIFIED TEST REPORTS.	P	
2. INSPECTION OF WELDING AND FASTENERS: A. COLD-FORMED STEEL DECK: 1) FLOOR AND ROOF DECK WELDS AND FASTNERS. B. REINFORCING STEEL: 1) VERIFICATION OF WELDABILITY OF REINFORCING STEEL OTHER THAN A706. 2) REINFORCING STEEL RESISTING FLEXURAL AND AXIAL FORCES IN INTERMEDIATE AND SPECIAL MOMENT FRAMES, AND BOUNDARY ELEMENTS OF SPECIAL STRUCTURAL WALLS OF CONCRETE AND SHEAR REINFORCEMENT. 3) SHEAR REINFORCEMENT. 4) OTHER REINFORCING STEEL.	P	
INSPECTION OF FABRICATORS AND FABRICATION PROCEDURES REFERENCE: IBC SECTION 1704.2.5.		

STRUCTURAL STEEL
REFERENCE: IBC SECTION 1705.2.1. INSPECTIONS FOR STRUCTURAL STEEL SHALL BE IN ACCORDANCE WITH QUALITY ASSURANCE REQUIREMENTS OF AISC 360, CHAPTER N.

FABRICATOR AND ERECTOR QUALITY CONTROL PROGRAM
REFERENCE AISC 360, CHAPTER N, SECTION N2

THE FABRICATOR'S QUALITY CONTROL INSPECTOR SHALL INSPECT THE FOLLOWING AS A MINIMUM, AS APPLICABLE:

1. SHOP WELDING, HIGH-STRENGTH BOLTING, AND DETAILS IN ACCORDANCE WITH AISC 360 SECTION N5.
2. SHOP CUT AND FINISHED SURFACES IN ACCORDANCE WITH AISC 360, SECTION M2.
3. SHOP HEATING FOR STRAIGHTENING, CAMBERING AND CURVING IN ACCORDANCE WITH AISC 360, SECTION M2.1.
4. TOLERANCES FOR SHOP FABRICATION IN ACCORDANCE WITH SECTION 6 OF THE CODE OF STANDARD PRACTICE.

THE ERECTOR'S QUALITY CONTROL INSPECTOR SHALL INSPECT THE AS A MINIMUM, AS APPLICABLE:

1. FIELD WELDING, HIGH-STRENGTH BOLTING, AND DETAILS IN ACCORDANCE WITH AISC 360, SECTION N5.
2. STEEL DECK AND HEADED STEEL STUD ANCHOR PLACEMENT AND ATTACHMENT IN ACCORDANCE WITH AISC 360, SECTION N6.
3. FIELD CUT SURFACES IN ACCORDANCE WITH AISC 360, SECTION M2.2.
4. FIELD HEATING FOR STRAIGHTENING IN ACCORDANCE WITH AISC 360, SECTION M2.1.
5. TOLERANCES FOR FIELD ERECTION IN ACCORDANCE WITH SECTION 7.13 OF THE CODE OF STANDARD PRACTICE.

FABRICATOR AND ERECTOR DOCUMENTS
REFERENCE AISC 360, CHAPTER N, SECTION N3

SUBMITTALS FOR STEEL CONSTRUCTION AND AVAILABLE DOCUMENTS FOR STEEL CONSTRUCTION SHALL CONFORM TO AISC 360, SECTION N3.

INSPECTION AND NONDESTRUCTIVE TESTING PERSONNEL
REFERENCE AISC 360, CHAPTER N, SECTION N4

QUALITY CONTROL INSPECTOR (FABRICATOR OR ERECTOR) QUALIFICATIONS, QUALITY ASSURANCE INSPECTOR (SPECIAL INSPECTOR) QUALIFICATIONS AND NONDESTRUCTIVE TESTING PERSONNEL (INSPECTION AGENCY PERSONNEL) QUALIFICATIONS SHALL CONFORM TO AISC 360, SECTION N4.

MINIMUM REQUIREMENTS FOR INSPECTION OF STRUCTURAL STEEL BUILDINGS
REFERENCE AISC 360, CHAPTER N, SECTION N5

QUALITY CONTROL INSPECTIONS BY THE FABRICATOR'S OR ERECTOR'S QUALITY CONTROL INSPECTOR (QCI) AND QUALITY ASSURANCE INSPECTIONS OF FABRICATED ITEMS AND THE ERECTED STEEL SYSTEM BY THE SPECIAL INSPECTOR (SI), SHALL CONFORM TO AISC 360, SECTION N5 AND TABLES N5.4-1, N5.4-2, N5.4-3, N5.6-1, N5.6-2, N5.6-3. IN THESE TABLES INSPECTION TASKS ARE AS FOLLOWS:

O-OBSERVE THESE ITEMS ON A RANDOM BASIS. OPERATIONS NEED NOT BE DELAYED PENDING THESE INSPECTIONS.
P-PERFORM THESE TASKS FOR EACH WELDED JOINT OR MEMBER.

NONDESTRUCTIVE TESTING OF WELDED JOINTS

NONDESTRUCTIVE TESTING OF WELDED JOINTS SHALL CONFORM TO AISC 360, SECTION N5 AND SHALL BE PERFORMED BY THE SPECIAL INSPECTOR (QUALITY ASSURANCE INSPECTOR) IN ACCORDANCE WITH AWSD1.1.

MINIMUM REQUIREMENTS FOR INSPECTION OF COMPOSITE CONSTRUCTION
REFERENCE AISC 360, CHAPTER N, SECTION N6

INSPECTION OF COMPOSITE CONSTRUCTION SHALL CONFORM TO AISC 360, SECTION N6 AND TABLE N6.1

INSPECTION OF FABRICATORS AND FABRICATION PROCEDURES
REFERENCE IBC SECTION 1704.2.5

INSPECTION OF FABRICATORS AND FABRICATION PROCEDURES SHALL BE PERFORMED BY THE QUALITY ASSURANCE INSPECTOR (SPECIAL INSPECTOR) AND SHALL CONFORM TO IBC SECTIONS 1704.2.5 AND 1704.2.5.1.

NONCONFORMING MATERIALS AND WORKMANSHIP
REFERENCE AISC 360, CHAPTER N, SECTION N8

IDENTIFICATION AND REJECTION OF MATERIALS OR WORKMANSHIP THAT IS NOT IN CONFORMANCE WITH THE CONSTRUCTION DOCUMENTS SHALL BE PERMITTED AT ANY TIME DURING THE PROGRESS OF THE WORK. NONCONFORMING MATERIAL AND WORKMANSHIP SHALL BE BROUGHT TO THE IMMEDIATE ATTENTION OF THE GENERAL CONTRACTOR AND THE FABRICATOR OR ERECTOR, AS APPLICABLE. NONCONFORMING MATERIAL OR WORKMANSHIP SHALL BE BROUGHT INTO CONFORMANCE, OR MADE SUITABLE FOR ITS INTENDED PURPOSE AS DETERMINED BY THE STRUCTURAL ENGINEER OF RECORD.

TABLE N5.4-1
INSPECTION TASKS PRIOR TO WELDING
REFERENCE AISC 360, CHAPTER N

INSPECTION TASKS PRIOR TO WELDING	QC		SI	
WELDING PROCEDURE SPECIFICATIONS (WPS'S) AVAILABLE	P		P	
MANUFACTURER CERTIFICATIONS FOR WELDING CONSUMABLES AVAILABLE	P		P	
MATERIAL IDENTIFICATION (TYPE/GRADE)	O		O	
WELDER IDENTIFICATION SYSTEM*	O		O	
FIT-UP OF GROOVE WELDS (INCLUDING JOINT GEOMETRY - JOINT PREPARATION - DIMENSIONS (ALIGNMENT, ROOT OPENING, ROOT FACE, BEVEL) - CLEANLINESS (CONDITION OF STEEL SURFACES) - TACKING (TACK WELD QUALITY AND LOCATION) - BACKING TYPE AND FIT (IF APPLICABLE)	O		O	
CONFIGURATION AND FINISH OF ACCESS HOLES	O		O	
FIT-UP OF FILLET WELDS - DIMENSIONS (ALIGNMENT, GAPS AND ROOT) - CLEANLINESS (CONDITION OF STEEL SURFACES) - TACKING (TACK WELDS QUALITY AND LOCATION)	O		O	
CHECK WELDING EQUIPMENT	O		-	

* THE FABRICATOR OR ERECTOR, AS APPLICABLE, SHALL MAINTAIN A SYSTEM BY WHICH A WELDER WHO HAS WELDED A JOINT OR MEMBER CAN BE IDENTIFIED. STAMPS, IF USED, SHALL BE THE LOW-STRESS TYPE.

WHERE:
O - OBSERVE THESE ITEMS ON A RANDOM BASIS. OPERATIONS NEED NOT BE DELAYED PENDING THESE INSPECTIONS.
P - PERFORM THESE TASKS FOR EACH WELDED JOINT OR MEMBER.
QC - QUALITY CONTROL INSPECTOR (FABRICATOR OR ERECTOR)
SI - SPECIAL INSPECTOR (QUALITY ASSURANCE INSPECTOR)

TABLE N5.4-2
INSPECTION TASKS DURING WELDING
REFERENCE AISC 360, CHAPTER N

INSPECTION TASKS DURING WELDING	QC		SI	
USE OF QUALIFIED WELDERS	O		O	
CONTROL AND HANDLING OR WELDING CONSUMABLES - PACKAGING - EXPOSURE CONTROL	O		O	
NO WELDING OVER CRACKED TACK WELDS	O		O	
ENVIRONMENTAL CONDITIONS - WIND SPEED WITHIN LIMITS - PRECIPITATION AND TEMPERATURE	O		O	
WPS FOLLOWED - SETTINGS ON WELDING EQUIPMENT - TRAVEL SPEED - SELECTED WELDING MATERIALS - SHIELDING GAS TYPE/FLOW RATE - PREHEAT APPLIED - INTERPASS TEMPERATURE MAINTAINED (MIN./MAX.) - PROPER POSITION (F, V, H, OH)	O		O	
WELDING TECHNIQUES - INTERPASS AND FINAL CLEANING - EACH PASS WITHIN PROFILE LIMITATIONS - EACH PASS MEETS QUALITY REQUIREMENTS	O		O	

WHERE:
O - OBSERVE THESE ITEMS ON A RANDOM BASIS. OPERATIONS NEED NOT BE DELAYED PENDING THESE INSPECTIONS.
P - PERFORM THESE TASKS FOR EACH WELDED JOINT OR MEMBER.
QC - QUALITY CONTROL INSPECTOR (FABRICATOR OR ERECTOR)
SI - SPECIAL INSPECTOR (QUALITY ASSURANCE INSPECTOR)

TABLE N5.6-3
INSPECTION TASKS AFTER BOLTING
REFERENCE AISC 360, CHAPTER N

INSPECTION TASKS AFTER BOLTING	QC		SI	
DOCUMENT ACCEPTANCE OR REJECTION OF BOLTED CONNECTIONS	P		P	

WHERE:
O - OBSERVE THESE ITEMS ON A RANDOM BASIS. OPERATIONS NEED NOT BE DELAYED PENDING THESE INSPECTIONS.
P - PERFORM THESE TASKS FOR EACH WELDED JOINT OR MEMBER.
QC - QUALITY CONTROL INSPECTOR (FABRICATOR OR ERECTOR)
SI - SPECIAL INSPECTOR (QUALITY ASSURANCE INSPECTOR)

TABLE N5.6-1
INSPECTION TASKS PRIOR TO BOLTING
REFERENCE AISC 360, CHAPTER N

INSPECTION TASKS PRIOR TO BOLTING	QC		SI	
USE OF QUALIFIED WELDERS	O		P	
FASTENERS MARKED IN ACCORDANCE WITH ASTM REQUIREMENTS	O		O	
PROPER FASTENERS SELECTED FOR THE JOINT DETAIL (GRADE, TYPE, BOLT LENGTH IF THREADS ARE TO BE EXCLUDED FROM SHEAR PLANE)	O		O	
PROPER BOLTING PROCEDURE SELECTED FOR JOINT DETAIL	O		O	
CONNECTING ELEMENTS, INCLUDING THE APPROPRIATE FAYING SURFACE CONDITION AND HOLE PREPARATION, IF SPECIFIED, MEET APPLICABLE REQUIREMENTS	O		O	
PRE-INSTALLED VERIFICATION TESTING BY INSTALLATION PERSONNEL OBSERVED AND DOCUMENTED FOR FASTENER ASSEMBLIES AND METHOD USED	P		O	
PROPER STORAGE PROVIDED FOR BOLTS, NUTS, WASHERS AND OTHER FASTENER COMPONENTS	O		O	

WHERE:
O - OBSERVE THESE ITEMS ON A RANDOM BASIS. OPERATIONS NEED NOT BE DELAYED PENDING THESE INSPECTIONS.
P - PERFORM THESE TASKS FOR EACH WELDED JOINT OR MEMBER.
QC - QUALITY CONTROL INSPECTOR (FABRICATOR OR ERECTOR)
SI - SPECIAL INSPECTOR (QUALITY ASSURANCE INSPECTOR)

TABLE N5.6-2
INSPECTION TASKS DURING BOLTING
REFERENCE AISC 360, CHAPTER N

INSPECTION TASKS DURING BOLTING	QC		SI	
FASTENER ASSEMBLIES, OF SUITABLE CONDITION, PLACED IN ALL HOLES AND WASHERS (IF REQUIRED) ARE POSITIONED AS REQUIRED	O		O	
JOINT BROUGHT TO THE SNUG-TIGHT CONDITION PRIOR TO THE PRETENSIONING OPERATION	O		O	
FASTENER COMPONENT NOT TURNED BY THE WRENCH PREVENTED FROM ROTATING	O		O	
FASTENERS ARE PRETENSIONED IN ACCORDANCE WITH RCSC SPECIFICATION, PROGRESSING SYSTEMATICALLY FROM THE MOST RIGID POINT TOWARD THE FREE EDGES	O		O	

WHERE:
O - OBSERVE THESE ITEMS ON A RANDOM BASIS. OPERATIONS NEED NOT BE DELAYED PENDING THESE INSPECTIONS.
P - PERFORM THESE TASKS FOR EACH WELDED JOINT OR MEMBER.
QC - QUALITY CONTROL INSPECTOR (FABRICATOR OR ERECTOR)
SI - SPECIAL INSPECTOR (QUALITY ASSURANCE INSPECTOR)

TABLE N5.4-3
INSPECTION TASKS AFTER WELDING
REFERENCE AISC 360, CHAPTER N

INSPECTION TASKS AFTER WELDING	QC		SI	
WELDS CLEANED	O		O	
SIZE, LENGTH AND LOCATION OF WELDS	P		P	
WELDS MEET VISUAL ACCEPTANCE CRITERIA - CRACK PROHIBITION - WELD/BASE-METAL FUSION - CRATER CROSS SECTION - WELD PROFILES - WELD SIZE - UNDERCUT - POROSITY	P		P	
ARC STRIKES	P		P	
K-AREA*	P		P	
BACKING REMOVED AND WELD TABS REMOVED (IF REQUIRED)	P		P	
REPAIR ACTIVITIES	P		P	
DOCUMENT ACCEPTANCE OR REJECTION OF WELDED JOINT OF MEMBER	P		P	

* WHEN WELDING OF DOUBLER PLATES, CONTINUITY PLATES OR STIFFENERS HAS BEEN PERFORMED IN THE K-AREA, VISUALLY INSPECT THE WEB K-AREA FOR CRACKS WITHIN 3 IN. OF THE WELD.

WHERE:
O - OBSERVE THESE ITEMS ON A RANDOM BASIS. OPERATIONS NEED NOT BE DELAYED PENDING THESE INSPECTIONS.
P - PERFORM THESE TASKS FOR EACH WELDED JOINT OR MEMBER.
QC - QUALITY CONTROL INSPECTOR (FABRICATOR OR ERECTOR)
SI - SPECIAL INSPECTOR (QUALITY ASSURANCE INSPECTOR)

City of Aurora Building Division
Reviewed for Code Compliance
Approved as Noted: Kirk Nagle
Date: Sep 08, 2023
2021 INTERNATIONAL CODES & 2023 NEC

Structural plan review is limited to a general survey for code compliance. No review is implied nor was undertaken to verify structural adequacy.

Salas O'Brien
salasobrien.com
Lakewood
165 S. Union Blvd
Lakewood, CO 80228
Registration:

CONFIDENTIAL
THIS DRAWING AND ASSOCIATED DESIGN ELEMENTS ARE CONFIDENTIAL AND THE PROPERTY OF SALAS O'BRIEN, WHICH RETAINS ALL COMMON LAW, COPYRIGHT, STATUTORY AND OTHER RIGHTS THERETO. COPYRIGHT INFRINGEMENT AND/OR MISAPPROPRIATION IS PROHIBITED, UNLESS OTHERWISE AGREED TO BY SALAS O'BRIEN, THIS DRAWING (AS WELL AS ANY COPIES) SHALL BE RETURNED TO SALAS O'BRIEN UPON REQUEST.

PROFESSIONAL SEAL

COLORADO REGISTERED PROFESSIONAL ENGINEER ROBERT D. TEPPER 32622 8-11-23

ISSUE DATE	DESCRIPTION
7/12/2023	90% CD

2023-00034
HCA
FACILITIGROUP

TMCA CATH LAB HVAC DEHUMIDIFICATION

AURORA, CO

REVISIONS

Δ	DESCRIPTION	DATE
Ø	ISSUE FOR CONSTRUCTION	8/11/2023

CHECKED BY: RL
DRAWN BY: SB

SHEET NAME

SPECIAL INSPECTIONS

SHEET NUMBER: S-002
REVISION: Ø

Autodesk Docs://080-2023-0034 TMCA Cathlab Dehumidification Upgrades/2023-00034 TMCA Cathlab-Struct_R22.rvt
8/9/2023 3:56:19 PM

RSN 1743619 Permit #2023-2378137-LT

NOTES:
1. C8x11.5 STAIR STRINGER.
2. PIPE 1 1/2 STD TOP RAIL.
3. PIPE 1 1/2 STD INTERMEDIATE RAIL.
4. PIPE 1 1/2 STD POST AT 4' OC MAX.
5. 3/8" FITTED STIFFENER PLATE.

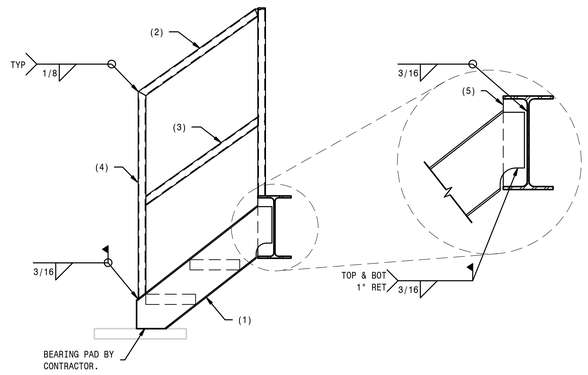

3 NEW SOUTH COOLING TOWER STAIRS
NO SCALE

NOTES:
1. AHU EQUIPMENT.
2. UNIT ANCHORAGE PER MFR.
3. STEEL BEAM PER PLAN.

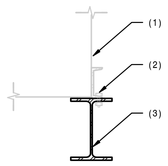

4 EQUIPMENT TO BEAM CONNECTION
NO SCALE

Structural plan review is limited to a general survey for code compliance. No review is implied nor was undertaken to verify structural adequacy.

City of Aurora Building Division
Reviewed for Code Compliance
Approved as Noted: Kirk Nagle
Date: Sep 08, 2023
2021 INTERNATIONAL CODES & 2023 NEC

NOTES:
1. BEAM PER PLAN.
2. COLUMN PER PLAN.
3. PL1/2x6 1/2x0'-10" W/ (4) 3/4" DIA THRU BOLTS.
4. 3/8" SHEAR PLATE EA SIDE.
5. EXISTING ROOF MEMBRANE.

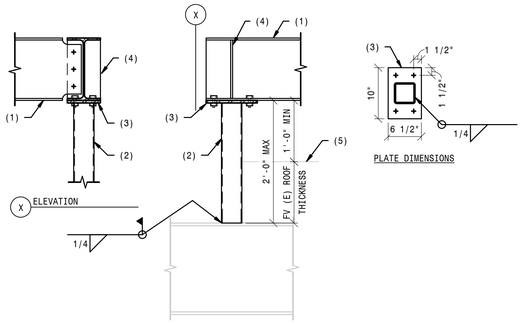

1 DUNNAGE BEAMS TO HSS
NO SCALE

BOLTED CONNECTION SCHEDULE	
NOMINAL BEAM DEPTH "D"	NUMBER OF 7/8" DIA. ASTM, A325N BOLTS
UP TO 7"	2
8" - 11"	2
12" - 14"	3
15" - 17"	4
18" - 20"	5
21" - 23"	6
24" - 29"	7
30" - 32"	8
33" - 35"	9
36"	10

FRAMING NOTES:
1. THE TYPICAL STEEL BEAM TO STEEL COLUMN OR STEEL BEAM TO STEEL BEAM CONNECTION CONSISTS OF 3/8" SINGLE SHEAR PLATES WITH 7/8" DIA. ASTM A325N BOLTS. USE 5/8" SHEAR PLATES WHERE "D" = 27" OR GREATER.
2. ALL BOLTS SHALL BE INSTALLED USING SHORT SLOTTED HOLES IN EITHER THE BEAM WEB OR THE SHEAR PLATE PER LATEST AISC SPECIFICATIONS.
3. CONNECTIONS REQUIRING DOUBLE ANGLES OR BENT PLATES WILL BE MARKED ON THE PLANS WITH AN ASTERISK (*). ALL DOUBLE ANGLES SHALL BE L4x4x1/4 AND ALL BENT PLATES SHALL BE 1/4" THICK - DETAIL PER SECTION 4 OF THE AISC STEEL CONSTRUCTION MANUAL.

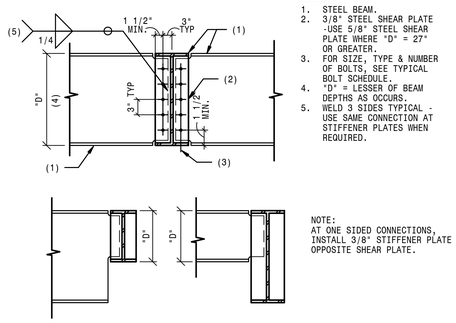

NOTES:
1. STEEL BEAM.
2. 3/8" STEEL SHEAR PLATE -USE 5/8" STEEL SHEAR PLATE WHERE "D" = 27" OR GREATER.
3. FOR SIZE, TYPE & NUMBER OF BOLTS, SEE TYPICAL BOLT SCHEDULE.
4. "D" = LESSER OF BEAM DEPTHS AS OCCURS.
5. WELD 3 SIDES TYPICAL - USE SAME CONNECTION AT STIFFENER PLATES WHEN REQUIRED.

NOTE:
AT ONE SIDED CONNECTIONS, INSTALL 3/8" STIFFENER PLATE OPPOSITE SHEAR PLATE.

2 TYPICAL CONNECTION WIDE FLANGE BEAM TO BEAM
NO SCALE

ROOF DUNNAGE NOTES:

1. CONTRACTOR TO FIELD VERIFY EXISTING STRUCTURAL STEEL MEMBER LAYOUT BEFORE FABRICATION OF NEW STEEL ELEMENTS.
2. ALL NEW STEEL STRUCTURE ELEMENTS TO BE HOT DIPPED GALVANIZED.
3. EQUIPMENT WEIGHT SHOWN AS XXK WHERE XX IS IN KIPS. WEIGHT SHOWN INCLUDES ALL INERTIA BASES AND/OR HOUSEKEEPING PADS. IF WEIGHT OF ACTUAL EQUIPMENT IS GREATER THAN SHOWN, OR ADDITIONAL EQUIPMENT NOT SHOWN EXISTS, NOTIFY STRUCTURAL ENGINEER IMMEDIATELY.
4. EQUIPMENT TO BE ATTACHED TO DUNNAGE PER 4/S-021.

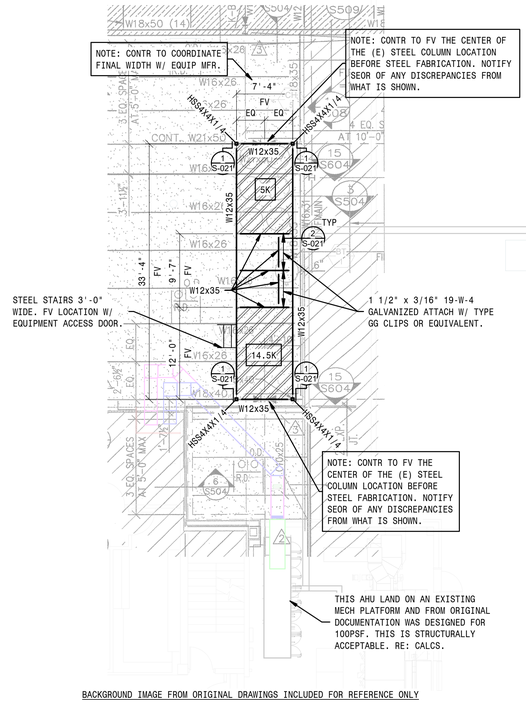

BACKGROUND IMAGE FROM ORIGINAL DRAWINGS INCLUDED FOR REFERENCE ONLY

NORTH

MECH EQUIPMENT FRAMING PLAN
SCALE: 1/8" = 1'-0"

Salas O'Brien
salasobrien.com
Lakewood
165 S. Union Blvd
Lakewood, CO 80228
Registration:

CONFIDENTIAL
THIS DRAWING AND ASSOCIATED DESIGN ELEMENTS ARE CONFIDENTIAL AND THE PROPERTY OF SALAS O'BRIEN, WHICH RETAINS ALL COMMON LAW, COPYRIGHT, STATUTORY AND OTHER RIGHTS THERETO. COPYING, DISTRIBUTION AND/OR PUBLICATION IS PROHIBITED, UNLESS OTHERWISE AGREED TO BY SALAS O'BRIEN, THIS DRAWING (AS WELL AS ANY COPIES) SHALL BE RETURNED TO SALAS O'BRIEN UPON REQUEST.

PROFESSIONAL SEAL

COLORADO REGISTERED
ROBERT D. TEPPER
32622
PROFESSIONAL ENGINEER
8-11-23

ISSUE DATE	DESCRIPTION
7/12/2023	90% CD

2023-00034
HCA
FACILITIGROUP

TMCA CATH LAB HVAC DEHUMIDIFICATION

AURORA, CO

REVISIONS

Δ	DESCRIPTION	DATE
Ø	ISSUE FOR CONSTRUCTION	8/11/2023

CHECKED BY: RL
DRAWN BY: SB

SHEET NAME

PARTIAL SECOND FLOOR ROOF PLAN

SHEET NUMBER: S-021
REVISION: Ø

Autodesk Docs://080-2023-0034 TMCA Cathlab Dehumidification Upgrades/2023-00034 TMCA Cathlab-Struct_R22.rvt
8/9/2023 3:56:19 PM

GENERAL ELECTRICAL SYMBOLS

SYMBOL	DESCRIPTION
	CONDUIT RUN CONCEALED IN CEILING OR WALL
	CONDUIT RUN CONCEALED IN OR BELOW FLOOR
	CONDUIT RUN EXPOSED ON CEILING OR WALL

ARROWHEAD DENOTES HOMERUN TO PANELBOARD. SLASH LINES INDICATE QUANTITY OF WIRE; NEUTRAL WIRE SHOWN AS A LONG LINE, PHASE WIRES AND SWITCH LEGS SHOWN AS SHORT LINES, AND GROUND WIRE SHOWN AS A LONG LINE WITH A DOT.

SYMBOL	DESCRIPTION
— X —	CONDUIT, WHERE "X" IS THE TYPE OR FUNCTION OF CONDUIT. "C" INDICATES CLOCK "CO" INDICATES CONDUIT ONLY "CTV" INDICATES CCTV "D" INDICATES DATA "FA" INDICATES FIRE ALARM "I" INDICATES INTERCOM "LV" INDICATES LOW VOLTAGE "NC" INDICATES NURSE CALL "S" INDICATES SOUND "T" INDICATES TELEPHONE "TVA" INDICATES TELEVISION ANTENNA "TVC" INDICATES CABLE TELEVISION
	CONDUIT STUBBED UP
	CONDUIT STUBBED DOWN
	FLEXIBLE CONDUIT
XX	CONDUIT TERMINATION: "CS" INDICATES CAP AND STAKE "GB" INDICATES GROUNDING BUSHING "IB" INDICATES INSULATING BUSHING "TB" INDICATES TERMINAL BUSHING
	CONDUIT SEAL
	MULTI-OUTLET ASSEMBLY
W W	WIREWAY
CT CT	CABLE TRAY
B B	BUSWAY (BUSDUCT)
	UNDERFLOOR DUCT SYSTEM: —— INDICATES POWER DUCT — - — INDICATES TELEPHONE DUCT - - - - INDICATES SYSTEM DUCT
	VARIOUS SYMBOLS IDENTIFY LOCATION OF DIFFERENT TYPES OF OUTLETS OR CONNECTIONS TO UNDERFLOOR DUCT SYSTEM.
PB	PULL BOX
J	JUNCTION BOX- EXPOSED OR IN CEILING
J	JUNCTION BOX - WALL MOUNTED
HD	JUNCTION BOX FOR HAND DRYER CONNECTION - WALL MOUNTED
J	JUNCTION BOX WITH FLEXIBLE CONDUIT AND FINAL CONNECTION TO EQUIPMENT.
PDQ 13	EQUIPMENT IDENTIFICATION TAG

LIGHTING SYMBOLS

SYMBOL	DESCRIPTION
F1 1a	2' X 4' LIGHTING FIXTURE.
F1 1a	2' X 2' LIGHTING FIXTURE.
F1 1a	1' X 4' LIGHTING FIXTURE.
F1 1a	LINEAR LIGHTING FIXTURE- LENGTH AS INDICATED.
F1 1a	WALL MOUNTED LINEAR LIGHTING FIXTURE- LENGTH AS INDICATED.
F1 1a F1 1a	INCANDESCENT, HID, OR LED LIGHTING FIXTURE.
F1 1a F1 1a	WALL MOUNTED INCANDESCENT, HID, OR LED LIGHTING FIXTURE
F1 E1	2' X 4' LIGHTING FIXTURE CONNECTED TO EMERGENCY CIRCUIT.
F1 E1	LINEAR LIGHTING FIXTURE CONNECTED TO EMERGENCY CIRCUIT.
F1 E1 F1 E1	INCANDESCENT, HID, OR LED LIGHTING FIXTURE CONNECTED TO EMERGENCY CIRCUIT.

LIGHTING FIXTURES:
"F1" INDICATES LIGHTING FIXTURE TYPE. REFER TO LIGHTING FIXTURE SCHEDULE FOR DESCRIPTION AND MOUNTING.
"1" INDICATES CIRCUIT NUMBER
"a" INDICATES SWITCH CONTROL.
SHADING OF LIGHTING FIXTURE OR "E" INDICATES LIGHTING FIXTURE CONNECTED TO EMERGENCY CIRCUIT.

SYMBOL	DESCRIPTION
F1 E2	BATTERY PACK, EMERGENCY LIGHTING UNIT
	REMOTE HEAD CONNECTED TO BATTERY PACK.
	TRACK LIGHTING
NEW #3 E3, #21 E5; NEW #3N E3, #21N E5; EXISTING #3E E3, #21E E5	"#X" INDICATES INSCRIPTION, ARROWS, AND SINGLE OR DOUBLE FACED, AS SHOWN BELOW. SHADED QUADRANTS INDICATES DIRECTION OF LIGHTED FACES. "#1" FIRE ESCAPE "#2A" STAIRS "#3" EXIT "#4" FIRE ESCAPE → "#5A" STAIRS → "#6" EXIT → "#7" FIRE ESCAPE ← "#8A" STAIRS ← "#9" EXIT ← "#10" FIRE ESCAPE ←→ "#11A" STAIRS ←→ "#12" EXIT ←→ "#13" EXIT - RECESSED "#14" TRIANGLE "#15" ELEVATOR "#16" FIRE ESCAPE "#17A" STAIRS "#18" EXIT "#19" FIRE ESCAPE ⇄ "#20A" STAIRS ⇄ "#21" EXIT ⇄ "#22" FIRE ESCAPE ⇄⇄ "#23A" STAIRS ⇄⇄ "#24" EXIT ⇄⇄
3W $ XXa	LIGHT SWITCH, SINGLE POLE UNLESS NOTED OTHERWISE: "a" INDICATES LIGHTS CONTROLLED "D" INDICATES DIMMER SWITCH "K" INDICATES KEY OPERATED "LV" INDICATES LOW VOLTAGE "MC" INDICATES MOMENTARY CONTACT "P" INDICATES PILOT LIGHT "TH" INDICATES THERMAL OVERLOAD PROTECTION "XX" INDICATES CIRCUIT NUMBER "WP" INDICATES WEATHERPROOF "2P" INDICATES 2 POLE "3P" INDICATES THREE POLE "3W" INDICATES THREE-WAY "4W" INDICATES FOUR-WAY

POWER DEVICE SYMBOLS

WALL / FLOOR BOX / POKE-THROUGH	DESCRIPTION
	DUPLEX RECEPTACLE
	DOUBLE DUPLEX RECEPTACLE
	DUPLEX RECEPTACLE - SPLIT WIRED
	SINGLE RECEPTACLE
	COMBINATION DUPLEX RECEPTACLE TELEPHONE/ DATA SYSTEMS OUTLET
	COMBINATION DOUBLE DUPLEX RECEPTACLE TELEPHONE/ DATA SYSTEMS OUTLET
	SPECIAL RECEPTACLE - NEMA TYPE AS INDICATED
P P P	JUNCTION BOX WITH FLEXIBLE CONDUIT AND FINAL EQUIPMENT OR FURNITURE SYSTEM POWER CONNECTION
WP XX	ADJACENT LETTERS IN THE SYMBOLS ABOVE INDICATE THE FOLLOWING: "CR" INDICATES CHILD RESISTANT (SAFETY TYPE) "E" INDICATES RECEPTACLE FED BY EMERGENCY CIRCUIT "EP" INDICATES RECEPTACLE IS EXPLOSION PROOF "GFI" INDICATES RECEPTACLE HAS GROUND FAULT CIRCUIT INTERRUPTER "IG" INDICATES RECEPTACLE HAS ISOLATED GROUND "TVS" INDICATES RECEPTACLE HAS TRANSIENT VOLTAGE SURGE SUPPRESSION "WP" INDICATES RECEPTACLE HAS WATERPROOF COVER "XX" INDICATES RECEPTACLE CIRCUIT NUMBER
	DUPLEX RECEPTACLE MOUNTED ABOVE COUNTER TOP
	CLOCK OUTLET RECEPTACLE
	CLOCK OUTLET AND CLOCK FOR INTEGRATED CLOCK SYSTEM.
USB	DUPLEX RECEPTACLE WITH (2) USB PORTS
USB	OUTLET WITH (4) USB PORTS
TC	TIME CLOCK
PC	PHOTOCELL
OS XX / OS XX	CEILING OR WALL MOUNTED OCCUPANCY SENSOR

POWER EQUIPMENT SYMBOLS

SYMBOL	DESCRIPTION
	SURFACE MOUNTED DISTRIBUTION PANELBOARD
	SURFACE MOUNTED BRANCH CIRCUIT PANELBOARD
	RECESSED MOUNTED BRANCH CIRCUIT PANELBOARD
1-HDP-1	SWITCHBOARDS, DISTRIBUTION PANELBOARDS, MOTOR CONTROL CENTERS, PANELBOARDS, CABINETS, AND RELATED EQUIPMENT
1 HDP 1	INDICATES LEVEL ON WHICH PANEL IS LOCATED - G, B, 1, 2, ETC. INDICATES TYPE, CODED AS FOLLOWS: INDICATES PANEL NUMBER "C" CRITICAL OR COMPUTER "D" DISTRIBUTION "E" EMERGENCY "H" 480/277V, OR 480V "ISP" ISOLATION "K" KITCHEN "L" LIGHTING "L" 208/120V, OR 208V "MCC" MOTOR CONTROL CENTER "P" POWER "Q" EQUIPMENT "R" RECEPTACLE "S" STANDBY "SWBD" SWITCHBOARD "XR" X-RAY
AS	NON-FUSED DISCONNECT SWITCH, "AS" INDICATES AMPERE RATING OF SWITCH
AS/AF	FUSED DISCONNECT SWITCH, "AS" INDICATES AMPERE RATING OF SWITCH AND "AF" INDICATES AMPERE RATING OF FUSE
	MAGNETIC MOTOR STARTER - NEMA SIZE AS INDICATED
AS	COMBINATION MOTOR STARTER AND NON-FUSED DISCONNECT, "AS" INDICATES AMPERE RATING OF SWITCH
M	UTILITY METER
T	TRANSFORMER
BGB	BUILDING GROUND BOX
ST	SHUNT TRIP
SPD	SURGE PROTECTION DEVICE
CM	CUSTOMER METER
EPO	EMERGENCY POWER OFF MUSHROOM PUSHBUTTON CONTROL STATION

FIRE ALARM SYMBOLS

SYMBOL	DESCRIPTION
S	FIRE ALARM MANUAL PULL STATION
SD	SMOKE DETECTOR
D	HEAT DETECTOR
S	VOICE SPEAKER
SV	VOICE SPEAKER WITH VISUAL ALARM
V	VISUAL STROBE
AV	AUDIBLE GENERAL ALARM WITH VISUAL STROBE
RA	REMOTE INDICATOR LIGHT FOR SMOKE DETECTOR
A	AUDIBLE GENERAL ALARM
DGP	FIRE ALARM TRANSPONDER PANEL

SECURITY SYMBOLS

SYMBOL	DESCRIPTION
	PUSH-BUTTON STATION "DB" DOORBELL "DR" DOOR RELEASE
	BUZZER
	BELL
CH	CHIME
T TH	LOW VOLTAGE TRANSFORMER WITHIN PLENUM BOX
CCTV	CLOSED CIRCUIT TELEVISION CAMERA
CR	CARD READER
ES	ELECTRIC STRIKE
DC	DOOR CONTACT
MS	MOTION SENSOR

COMMUNICATIONS SYMBOLS

SYMBOL	DESCRIPTION
TTC	TELEPHONE TERMINAL CABINET
WALL / FLOOR BOX / POKE-THROUGH	SUBSCRIPT INDICATES THE FOLLOWING FOR BELOW WALL MOUNTED OUTLETS, (U.N.O.): "H" HANDICAP MOUNTED AT 48" A.F.F. "P" PAY PHONE MOUNTED AT 54" A.F.F. "W" WALL MOUNTED AT 54" A.F.F.
	TELEPHONE OUTLET
	DUPLEX TELEPHONE OUTLET
	DATA SYSTEMS OUTLET
	DUPLEX DATA SYSTEMS OUTLET
	COMBINATION TELEPHONE/ DATA SYSTEMS OUTLET
T T/D D	JUNCTION BOX WITH FLEXIBLE CONDUIT AND FINAL EQUIPMENT OR FURNITURE SYSTEM CONNECTION. SUBSCRIPTS INDICATE THE FOLLOWING: "T" - TELEPHONE "D" - DATA SYSTEMS "T/D" - COMBINATION TELEPHONE/ DATA SYSTEMS
I I	INTERCOM, WALL OR CEILING MOUNTED
S S	SPEAKER, WALL OR CEILING MOUNTED

ABBREVIATIONS

NOTE: ABBREVIATIONS ARE ALPHABETICALLY LISTED BY DESCRIPTION.

ABBREV.	DESCRIPTION	ABBREV.	DESCRIPTION
AFF	ABOVE FINISHED FLOOR	KVA	KILOVOLT-AMPERE
ACL	ACROSS THE LINE	KO	KNOCKOUT
ALM	ALARM	LTG	LIGHTING
AC	ALTERNATING CURRENT	LS	LOUD SPEAKER
A	AMPERE	LV	LOW VOLTAGE
AMP	AMPERE	MH	MANHOLE
AIC	AMPERES INTERRUPTING CAPACITY	MFR	MANUFACTURER
AL	ALUMINUM	MV	MULTI VAPOR
ANN	ANNUNCIATOR	MERC.	MERCURY VAPOR
ATS	AUTOMATIC TRANSFER SWITCH	MTR	MOTOR
BAL	BALLAST	MCC	MOTOR CONTROL CENTER
BR	BRANCH	MTD	MOUNTED
BRKR	BREAKER	NEC	NATIONAL ELECTRICAL CODE
BGB	BUILDING GROUND BOX	NEUT	NEUTRAL
CAB	CABINET	NC	NORMALLY CLOSED
CATV	CABLE TELEVISION	NO	NORMALLY OPENED
C.B.	CIRCUIT BREAKER	NIC	NOT IN CONTRACT
CCT	CIRCUIT	NTS	NOT TO SCALE
CCTV	CLOSED CIRCUIT TELEVISION	PNL	PANEL
CLO	CLOSET	PH	PHASE
COAX	COAXIAL	PT	POTENTIAL TRANSFORMER
C.U.	COEFFICIENT OF UTILIZATION	PWR	POWER
COMED	COMMONWEALTH EDISON COMPANY	PRI	PRIMARY
C	CONDUIT	PROT.	PROTECTION OR PROTECTIVE
CONN	CONNECTION	PA	PUBLIC ADDRESS
CONV	CONVENIENCE	PB	PULL BOX
CU	COPPER	RT	RAINTIGHT
CUH	CABINET UNIT HEATER	RECP	RECEPTACLE
CT	CURRENT TRANSFORMER	RC	REMOTE CONTROL
HZ	HERTZ (CYCLES/SECOND)	R	RESISTANCE
DC	DIRECT CURRENT	REL	RELOCATE
DS	DISCONNECT SWITCH	SEC	SECONDARY
DPDT	DOUBLE POLE DOUBLE THROW	SC	SHORT CIRCUIT
DPST	DOUBLE POLE SINGLE THROW	SP	SINGLE POLE
DO	DRAWOUT	SPST	SINGLE POLE SINGLE THROW
DT	DUSTTIGHT	SPDT	SINGLE POLE DOUBLE THROW
ELEC	ELECTRIC	SPKR	SPEAKER
EWC	ELECTRIC WATER COOLER	SPEC	SPECIFICATION
EWH	ELECTRIC WATER HEATER	SS	STAINLESS STEEL
EM	EMERGENCY	STA	STATION
EMT	ELECTRIC METALLIC TUBING (THIN WALL CONDUIT)	S	SWITCH
		SWBD	SWITCHBOARD
		SWGR	SWITCHGEAR
EQ	EQUIPMENT	SYM	SYMMETRICAL
EUH	ELECTRIC UNIT HEATER	SYS	SYSTEM
EX	EXISTING	TC	TERMINAL CABINET
EP	EXPLOSION PROOF	TEL	TELEPHONE
FPB	FAN POWERED BOX	TEL.CL.	TELEPHONE CLOSET
FA	FIRE ALARM	TTC	TELEPHONE TERMINAL CABINET
FDC	FIRE DEPARTMENT CONNECTION	TV	TELEVISION
FB	FLOORBOX	TERM.	TERMINAL
FLUOR	FLUORESCENT	TX	TRANSFORMER
FMC	FLEXIBLE METALLIC CONDUIT	T	TRIP
F	FUSE	TL	TWIST LOCK
F.S.	FUSED SWITCH	UL	UNDERWRITER'S LABORATORIES
GEN	GENERATOR	UNG	UNGROUNDED
GRD	GROUND	UH	UNIT HEATER
GFI	GROUND FAULT INTERRUPTER	UNO	UNLESS NOTED OTHERWISE
GHW	GALVANIZED HEAVYWALL STEEL CONDUIT	VP	VAPORPROOF
		VT	VAPORTIGHT
HV	HIGH VOLTAGE	V	VOLT
HP	HORSE POWER	VA	VOLT-AMPERE
INC	INCANDESCENT	WT	WATERTIGHT
IC	INTERRUPTING CAPACITY	W	WATT
IMC	INTERMEDIATE GRADE CONDUIT	WP	WEATHERPROOF
JB	JUNCTION BOX	XR	EXISTING TO BE REMOVED
KW	KILOWATT	XRL	EXISTING TO BE RELOCATED
KWH	KILOWATT-HOUR	XRW	EXISTING TO BE REWIRED

GENERAL NOTES

1. REFER TO ARCHITECTURAL DRAWINGS FOR EXACT LOCATIONS OF LIGHTING AND CONTROLS, RECEPTACLES, COMMUNICATIONS DEVICES, FIRE ALARM DEVICES, AND LIFE SAFETY DEVICES.

2. REFER TO MECHANICAL DRAWINGS FOR EXACT LOCATION OF HVAC, PLUMBING, AND FIRE PROTECTION EQUIPMENT.

3. REFER TO PANEL DIVISION LINES FOR BRANCH CIRCUIT HOMERUN PANELBOARD DEMARCATION LINES, UNLESS NOTED OTHERWISE.

4. BRANCH CIRCUIT WIRING FOR 120 VOLT 20 AMP CIRCUITS WIRED TO 208Y/120V SYSTEMS SHALL BE AS FOLLOWS: A. GENERAL RECEPTACLES AND LIGHTING LOADS: UP TO 100 FEET IN LENGTH: 3#12, 1#12N, 1#12G -3/4"C. OVER 100 FEET IN LENGTH: 3#10, 1#10N, 1#10G -3/4"C.

5. BRANCH CIRCUIT WIRING FOR 277 VOLT 20 AMP CIRCUITS WIRED TO 480Y/277V SYSTEMS SHALL BE AS FOLLOWS: A. LIGHTING LOADS: UP TO 150 FEET IN LENGTH: 3#12, 1#10N, 1#12G -3/4"C. OVER 150 FEET IN LENGTH: 3#10, 1#8N, 1#10G -3/4"C.

6. DISTANCES FOR BRANCH CIRCUIT WIRING, AS INDICATED IN NOTES 4 & 5 ABOVE, SHALL BE MEASURED FROM THE FINAL OCPD TO THE CENTER OF THE BRANCH CIRCUIT LOAD. SIZES ARE A MINIMUM AND CONTRACTOR MAY BE REQUIRED TO UP-SIZE TO ACCOUNT FOR VOLTAGE DROP.

7. BRANCH CIRCUIT CONDUCTORS SIZED AS INDICATED IN NOTES 4 & 5 ABOVE AND/OR ON PLAN SHALL BE ROUTED TO EACH ELECTRIC DEVICE CONNECTED TO THE INDICATED BRANCH CIRCUIT. PROVIDE WIRENUTS AND PIGTAILS SIZED TO MATCH THE CORRESPONDING OCPD LISTED IN THE BRANCH CIRCUIT WIRING SCHEDULE FOR ELECTRICAL DEVICE TERMINATIONS WHERE THE ELECTRICAL DEVICE LUGS CANNOT ACCOMMODATE THE INCREASED CONDUCTOR SIZE INDICATED ABOVE, U.N.O.

8. REFER TO THE BRANCH CIRCUIT WIRING SCHEDULE FOR MINIMUM INSTALLATION CRITERIA. BRANCH CIRCUIT WIRING SPECIFIED IN NOTES AND/OR ON PLAN OR OTHER SCHEDULES SHALL TAKE PRECEDENCE OVER THE INFORMATION PROVIDED IN THE SCHEDULE.

9. PROVIDE AN EQUIPMENT GROUNDING SCREW WITHIN THE RECEPTACLE OUTLET BOX FOR RECEPTACLES WITHOUT A SIDE-MOUNTED GROUNDING SCREW FOR TERMINATION OF THE BRANCH CIRCUIT EQUIPMENT GROUNDING CONDUCTOR.

10. ELECTRICAL DEVICE BRANCH CIRCUIT WIRING LEGEND:

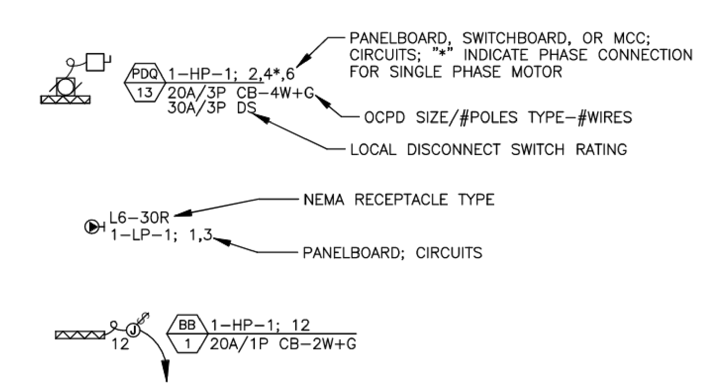

11. MOUNTING HEIGHTS OF ELECTRICAL ITEMS SHALL BE AS LISTED BELOW ABOVE FINISHED FLOOR TO CENTERLINE, UNLESS NOTED OTHERWISE ON ARCHITECTURAL DRAWINGS OR AS REQUIRED BY CODE:
- A. GENERAL RECEPTACLES 18"
- B. PATIENT RECEPTACLES 18"
- C. GENERAL TELE AND DATA OUTLETS 18"
- D. PATIENT TELE AND DATA OUTLETS 18"
- E. GENERAL TOGGLE SWITCHES 48"
- F. FIRE ALARM PULL STATIONS 48"
- G. SECURITY CALL STATIONS 48"
- H. CLOCK AND PAGING SPEAKER OUTLETS 84"
- I. FIRE ALARM AUDIO VISUAL DEVICES 80"
- J. GENERAL WALL MOUNTED LIGHTS 90"
- K. CORRIDOR WALL SCONCES (>4" DEEP) 66"
- L. EXIT SIGNS 90"
- M. INDIVIDUAL DISCONNECTS AND STARTERS 60"
- N. GROUPED DISCONNECTS AND STARTERS > 12" < 72"
- O. PANELBOARD OVERCURRENT DEVICES > 12" < 72"

13. CABLING AND OUTLETS SHALL BE FURNISHED AND INSTALLED BY THE OWNER'S COMMUNICATIONS CONTRACTOR . COORDINATE RACEWAY REQUIREMENTS WITH COMMUNICATIONS CONTRACTOR.

DEMOLITION NOTES

1. REFER TO ARCHITECTURAL DEMOLITION DRAWINGS FOR FULL EXTENT AND SCOPE OF PARTITION AND CEILING MODIFICATIONS.

A. EXISTING CEILINGS TO REMAIN SHALL NOT BE ALTERED EXCEPT WHERE REMOVAL AND REPLACEMENT OF SURFACES IS REQUIRED TO MODIFY SYSTEMS WITHIN CEILING SPACE.

B. EXISTING CEILINGS TO BE REMOVED SHALL INCLUDE DEMOLITION OF ALL FIXTURES, EQUIPMENT, SPEAKERS, RACEWAY, AND WIRE, INCLUDING ANY OBSOLETE OR PREVIOUSLY ABANDONED PRODUCTS. REMAINING AREAS SHALL ONLY BE ALTERED AS REQUIRED AND IN ACCORDANCE WITH THE CONTRACT DOCUMENTS.

C. EXISTING PARTITIONS TO REMAIN SHALL NOT BE ALTERED EXCEPT WHERE REMOVAL AND REPLACEMENT OF SURFACES IS REQUIRED TO MODIFY SYSTEMS WITHIN PARTITIONS.

D. EXISTING PARTITIONS TO BE REMOVED SHALL INCLUDE DEMOLITION OF ALL DEVICES, RACEWAY AND WIRE INCLUDING ANY OBSOLETE OR PREVIOUSLY ABANDONED PRODUCTS. RACEWAY AND WIRING SYSTEMS SERVING OTHER REMAINING AREAS SHALL ONLY BE ALTERED AS REQUIRED AND IN ACCORDANCE WITH THE CONTRACT DOCUMENTS.

E. EXISTING FLOOR MOUNTED DEVICES SHALL BE DEMOLISHED. PROVIDE ABANDONING PLATES AND FIRE PROOFING AS REQUIRED.

2. REFER TO MECHANICAL AND PLUMBING DEMOLITION DRAWINGS FOR FULL EXTENT AND SCOPE OF ELECTRICALLY OPERATED EQUIPMENT MODIFICATIONS.

A. DEMOLITION OF EXISTING MECHANICAL EQUIPMENT SHALL INCLUDE ASSOCIATED DISCONNECTS, RACEWAY, WIRE, CONTROLS.

B. ELECTRICAL CONTRACTOR SHALL REMOVE ALL CABLE AND RACEWAY ASSOCIATED WITH EXISTING FILTER FAN DIFFUSER UNITS, AHU-4, AND OUTSIDE AIR FAN UNIT ABOVE FIRST FLOOR CEILING WITHIN CATH LAB 4, ALONG WITH EXISTING DX UNIT ON ROOF ABOVE CATH LAB 4. EXISTING ELECTRICAL CIRCUITS SHALL BE REMOVED BACK TO EXISTING POWER SOURCES.

Code violations that are found during inspection are required to be corrected. Permit issuance does not grant approval of a code violation.

This sheet of drawings has not been reviewed for code compliance.

CODES AND STANDARDS

DESIGNED UNDER THE FOLLOWING CODES AND STANDARDS:
2020 NATIONAL ELECTRICAL CODE
2021 INTERNATIONAL BUILDING CODE
2021 INTERNATIONAL ENERGY CONSERVATION CODE
2021 INTERNATIONAL FIRE CODE
2017 ANSI A117.1, ACCESSIBILITY REQUIREMENTS
ANSI/ASME A17.1, SAFETY CODE FOR ELEVATORS
NFPA 72 NATIONAL FIRE ALARM CODE

BRANCH CIRCUIT WIRING SCHEDULE

OCPD AMPS	1P-2W+G,2P-2W+G	2P-3W+G & 3P-3W+G	3P-4W+G	COMMENTS
15	2#12, 1#12G, 3/4"C	3#12, 1#12G, 3/4"C	4#12, 1#12G, 3/4"C	
20	2#12, 1#12G, 3/4"C	3#12, 1#12G, 3/4"C	4#12, 1#12G, 3/4"C	
25	2#10, 1#10G, 3/4"C	3#10, 1#10G, 3/4"C	4#10, 1#10G, 3/4"C	
30	2#10, 1#10G, 3/4"C	3#10, 1#10G, 3/4"C	4#10, 1#10G, 3/4"C	
35	2#8, 1#10G, 3/4"C	3#8, 1#10G, 3/4"C	4#8, 1#10G, 3/4"C	
40	2#8, 1#10G, 3/4"C	3#8, 1#10G, 3/4"C	4#8, 1#10G, 3/4"C	
45	2#6, 1#10G, 3/4"C	3#6, 1#10G, 3/4"C	4#6, 1#10G, 1"C	
50	2#6, 1#10G, 3/4"C	3#6, 1#10G, 3/4"C	4#6, 1#10G, 1"C	
60	2#4, 1#10G, 3/4"C	3#4, 1#10G, 1"C	4#4, 1#10G, 1 1/4"C	
70	2#4, 1#8G, 3/4"C	3#4, 1#8G, 1"C	4#4, 1#8G, 1 1/4"C	
80	2#3, 1#8G, 1"C	3#3, 1#8G, 1"C	4#3, 1#8G, 1 1/4"C	
90	2#2, 1#8G, 1"C	3#2, 1#8G, 1 1/4"C	4#2, 1#8G, 1 1/4"C	
100	2#1, 1#8G, 1 1/4"C	3#1, 1#8G, 1 1/4"C	4#1, 1#8G, 1 1/2"C	

RECEPTACLE OCPD AND WIRING SCHEDULE -NOTE 9

GENERAL PURPOSE NON-LOCKING NEMA TYPE	SPECIAL PURPOSE LOCKING NEMA TYPE	OCPD & WIRING	COMMENTS
15 AMPERE			
1-15R	L1-15R	15A / 1P - 2W+G	
5-15R	L5-15R	15A / 1P - 2W+G	
6-15R	L6-15R	15A / 2P - 2W+G	
7-15R	L7-15R	15A / 1P - 2W+G	
11-15R	L11-15R	15A / 3P - 3W+G	
14-15R	-	15A / 3P - 3W+G	
15-15R	-	15A / 3P - 3W+G	
18-15R	-	15A / 3P - 4W+G	
20 AMPERE			
2-20R	L2-20R	20A / 2P - 2W+G	
5-20R	L5-20R	20A / 1P - 2W+G	
6-20R	L6-20R	20A / 2P - 2W+G	
7-20R	L7-20R	20A / 1P - 2W+G	
-	L8-20R	20A / 2P - 2W+G	
10-20R	L10-20R	20A / 2P - 3W+G	
11-20R	L11-20R	20A / 3P - 3W+G	
-	L12-20R	20A / 3P - 3W+G	
14-20R	L14-20R	20A / 2P - 3W+G	
15-20R	L15-20R	20A / 3P - 3W+G	
-	L16-20R	20A / 3P - 3W+G	
18-20R	L18-20R	20A / 3P - 4W+G	
-	L19-20R	20A / 3P - 4W+G	
-	L21-20R	20A / 3P - 4W+G	
-	L22-20R	20A / 3P - 4W+G	
30 AMPERE			
2-30R	-	30A / 2P - 2W+G	
5-30R	L5-30R	30A / 1P - 2W+G	
6-30R	L6-30R	30A / 2P - 2W+G	
7-30R	L7-30R	30A / 1P - 2W+G	
-	L8-30R	30A / 2P - 2W+G	
10-30R	L10-30R	30A / 2P - 3W+G	
11-30R	L11-30R	30A / 3P - 3W+G	
-	L12-30R	30A / 3P - 3W+G	
14-30R	L14-30R	30A / 2P - 3W+G	
15-30R	L15-30R	30A / 3P - 3W+G	
-	L16-30R	30A / 3P - 3W+G	
18-30R	L18-30R	30A / 3P - 4W+G	
-	L19-30R	30A / 3P - 4W+G	
-	L21-30R	30A / 3P - 4W+G	
-	L22-30R	30A / 3P - 4W+G	
50 AMPERE			
5-50R	L5-50R	50A / 1P - 2W+G	
6-50R	L6-50R	50A / 2P - 2W+G	
7-50R	L7-50R	50A / 1P - 2W+G	
-	L8-50R	50A / 2P - 2W+G	
10-50R	-	50A / 2P - 3W+G	
11-50R	-	50A / 3P - 3W+G	
14-50R	L14-50R	50A / 2P - 3W+G	
15-50R	L15-50R	50A / 3P - 3W+G	
-	L16-50R	50A / 3P - 3W+G	
18-50R	-	50A / 3P - 4W+G	
-	L21-50R	50A / 3P - 4W+G	
-	L22-50R	50A / 3P - 4W+G	
60 AMPERE			
-	L5-60R	60A / 1P - 2W+G	
-	L6-60R	60A / 2P - 2W+G	
-	L7-60R	60A / 1P - 2W+G	
-	L8-60R	60A / 2P - 2W+G	
14-60R	L14-60R	60A / 2P - 3W+G	
15-60R	L15-60R	60A / 3P - 3W+G	
-	L16-60R	60A / 3P - 3W+G	
18-60R	-	60A / 3P - 4W+G	
-	L21-60R	60A / 3P - 4W+G	
-	L22-60R	60A / 3P - 4W+G	

ELECTRICAL SHEET INDEX

SHEET NUMBER	SHEET NAME
E-001	ELECTRICAL SYMBOLS, ABBREVIATIONS, & NOTES
E-002	ELECTRICAL SPECS & DEMO NOTES
E-003	ELECTRICAL ONE-LINE DIAGRAM
E-004	ELECTRICAL PANEL SCHEDULES
E-005	ELECTRICAL PARTIAL FIRST FLOOR POWER PLAN
E-006	ELECTRICAL PARTIAL SECOND FLOOR POWER PLAN

Salas O'Brien
salasobrien.com
Dublin
2751 Tuller Pkwy
Dublin, OH 43017
Registration:

CONFIDENTIAL
THIS DRAWING AND ASSOCIATED DESIGN ELEMENTS ARE CONFIDENTIAL AND THE PROPERTY OF SALAS O'BRIEN, WHICH RETAINS ALL COMMON LAW, COPYRIGHT, STATUTORY AND OTHER RIGHTS THERETO. ANY UNAUTHORIZED USE, REUSE OR REPRODUCTION IS PROHIBITED. UNLESS OTHERWISE AGREED TO BY SALAS O'BRIEN, THIS DRAWING (AS WELL AS ANY COPIES) SHALL BE RETURNED TO SALAS O'BRIEN UPON REQUEST.

PROFESSIONAL SEAL

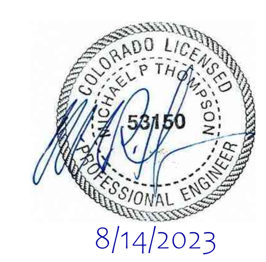

ISSUE DATE	DESCRIPTION
08/01/2023	100% CD

2023-00034-00
HEALTHTRUST FACILITIGROUP

TMCA CATH LAB HVAC DEHUMIDIFICATION

1501 S. POTOMAC ST,
AURORA, CO 80012

REVISIONS

Δ	DESCRIPTION	DATE
0	ISSUED FOR CONSTRUCTION	08/01/23

CHECKED BY	DRAWN BY
TJS	CAH

SHEET NAME

ELECTRICAL SYMBOLS, ABBREVIATIONS, & NOTES

SHEET NUMBER	REVISION
E-001	0

Autodesk Docs://080-2023-0034 TMCA Cathlab Dehumidification Upgrades/2023-00034 TMCA Cathlab-Mech_R22_R2.rvt
8/1/2023 11:44:35 AM

RSN 1743619 Permit #2023 2378137-LT

DIVISION 260000 - ELECTRICAL

1. GENERAL

A. REQUIREMENTS:

1) PRODUCTS AND EXECUTION SHALL BE PROVIDED FOR A COMPLETE AND FULLY OPERATIONAL ELECTRICAL SYSTEM THROUGHOUT THE EXTENT OF THE PROJECT, IN CONFORMANCE WITH APPLICABLE CODES, LAWS, ORDINANCES AND AGENCY STANDARDS OF GOVERNING BODIES HAVING JURISDICTION, AND IN STRICT ACCORDANCE WITH THE CONTRACT DOCUMENTS, AND BUILDING STANDARDS.

2) PRODUCTS, INCLUDING EQUIPMENT, DEVICES, FIXTURES, AND MATERIALS SHALL BE NEW UNLESS NOTED OTHERWISE, UL LISTED, AND BEAR APPROPRIATE LABEL.

3) EXECUTION, INCLUDING PREPARATION, INSTALLATION, STARTING, AND TESTING SHALL BE PERFORMED BY SKILLED TRADES PERSONNEL, IN COMPLIANCE WITH THE ASSOCIATED MANUFACTURERS RECOMMENDATIONS, AND COORDINATED WITH THE OTHER CONSTRUCTION TRADES.

B. APPLICABLE LAWS AND AGENCY STANDARDS:

1)	AMERICAN NATIONAL STANDARDS INSTITUTE	ANSI
2)	AMERICAN SOCIETY FOR TESTING AND MATERIALS	ASTM
3)	AMERICANS WITH DISABILITIES ACT	ADA
4)	ASSOCIATION OF EDISON ILLUMINATING COMPANIES	AEIC
5)	CERTIFIED BALLAST MANUFACTURERS	CBM
6)	ELECTRICAL TESTING LABORATORIES	ETL
7)	ELECTRONIC/TELECOMMUNICATIONS INDUSTRIES ASSOCIATION	EIA/TIA
8)	ENERGY POLICY ACT OF 1992	EPACT
9)	FEDERAL AVIATION ADMINISTRATION	FAA
10)	ILLUMINATING ENGINEERING SOCIETY OF NORTH AMERICA	IESNA
11)	INSTITUTE OF ELECTRICAL AND ELECTRONICS ENGINEERS	IEEE
12)	INSULATED CABLE ENGINEERS ASSOCIATION	ICEA
13)	NATIONAL ELECTRICAL MANUFACTURERS ASSOCIATION	NEMA
14)	NATIONAL FIRE PROTECTION ASSOCIATION	NFPA
15)	UNDERWRITERS' LABORATORIES	UL

C. APPROVALS:

1) FIRE ALARM AND LIFE SAFETY DOCUMENTS SHALL BE PREPARED AND SUBMITTED TO THE LOCAL FIRE DEPARTMENT FOR THEIR APPROVAL OF SYSTEM EXPANSION, LAYOUT, CIRCUITING, EQUIPMENT AND DEVICE TYPE. THE BASE BUILDING FIRE ALARM AND LIFE SAFETY SYSTEM MANUFACTURER/INSTALLER SHALL BE RETAINED TO PRODUCE OR UPDATE THE BUILDING FIRE ALARM AND LIFE SAFETY DOCUMENTS, AND TO MAKE FINAL CONNECTIONS AND ALTERATIONS TO THE EXISTING SYSTEM. APPROVED DRAWINGS SHALL BE SUBMITTED FOR REVIEW PRIOR TO CONSTRUCTION.

2) OTHER SYSTEMS REQUIRING SPECIFIC APPROVAL.

D. SUBMITTALS:

1) PRODUCT DATA SHALL BE PREPARED AND SUBMITTED FOR REVIEW PRIOR TO CONSTRUCTION FOR THE FOLLOWING PRODUCTS: CABINETS, ACCESS PANELS, SUPPORTS, RACEWAY COMPONENTS, FLOOR BOXES, FIRE PROOF FITTINGS, WIRE, FUSES, CIRCUIT BREAKERS, RECEPTACLES, TOGGLE SWITCHES, SLIDE DIMMERS, DISCONNECT SWITCHES, MOTOR STARTERS, CONTACTORS, LIGHTING FIXTURES, BALLASTS, LAMPS, CONTROLS, FIRE ALARM DEVICES, LIFE SAFETY DEVICES, AND ELECTRIC HEATING EQUIPMENT.

2) SHOP DRAWINGS SHALL BE PREPARED AND SUBMITTED FOR REVIEW PRIOR TO CONSTRUCTION FOR THE FOLLOWING PRODUCTS: METERING EQUIPMENT, DISTRIBUTION PANELBOARDS, BRANCH PANELBOARDS, TRANSFORMERS, CABLE TRAY, DIMMING EQUIPMENT, FIRE ALARM EQUIPMENT, AND LIFE SAFETY EQUIPMENT.

3) TEST RESULTS SHALL BE PREPARED AND SUBMITTED PRIOR TO PROJECT COMPLETION FOR CABLE INSULATION, GROUNDING SYSTEM, EMERGENCY SYSTEM, FIRE ALARM SYSTEM, AND LIFE SAFETY SYSTEMS IN ACCORDANCE WITH AUTHORITIES HAVING JURISDICTION, AND APPLICABLE CODES AND AGENCY STANDARDS.

4) MANUFACTURERS INSTRUCTIONS SHALL BE PREPARED AND SUBMITTED PRIOR TO CONSTRUCTION INCLUDING INSTALLATION MANUALS WITH APPLICATION CONDITIONS AND LIMITATIONS FOR ELECTRICAL APPARATUS USE, STORAGE, HANDLING, PROTECTION, EXAMINATION, PREPARATION, INSTALLATION, AND STARTING.

5) PROJECT RECORD DOCUMENTS SHALL BE PREPARED USING AUTOCAD OR EQUIVALENT CAD PACKAGE. PROJECT RECORD DOCUMENTS SHALL BE SUBMITTED ON REPRODUCIBLE MEDIA PRIOR TO PROJECT COMPLETION FOR ELECTRICAL SYSTEMS. RECORD ACTUAL LOCATION OF EQUIPMENT, DEVICES, FIXTURES, ETC. RECORD ACTUAL ROUTING OF OVERHEAD FEEDERS. RECORD ACTUAL ROUTING OF FEEDERS BELOW SLAB AND BRANCH CIRCUITS WITHIN OR BELOW SLAB.

6) MAINTENANCE DATA SHALL BE PREPARED AND SUBMITTED PRIOR TO PROJECT COMPLETION FOR ELECTRICAL APPARATUS INCLUDING OPERATION MANUALS AND MAINTENANCE MANUALS.

E. COORDINATION:

1) ELECTRICAL ENGINEER: NOTIFY THE ENGINEER OF ANY CONFLICTING DESIGN INFORMATION OR ANY DESIGN INTENTIONS WHICH ARE NOT READILY INTERPRETED FROM THE CONTRACT DOCUMENTS PRIOR TO ANY PRODUCT SELECTION OR EXECUTION OF WORK. NOTIFY THE ENGINEER OF ANY PRODUCTS WHICH ARE DAMAGED, UNSUITABLE, INCOMPATIBLE, OR NON-COMPLIANT WITH ANY APPLICABLE CODES OR ORDINANCES OF ANY GOVERNING BODIES HAVING LAWFUL JURISDICTION.

2) CONSTRUCTION TRADES: COORDINATE WORK WITH OTHER CONSTRUCTION TRADES.

3) BUILDING MANAGEMENT: MEET ON SITE WITH THE BUILDING ENGINEER TO BECOME FAMILIAR WITH BUILDING STANDARDS. NORMAL BUILDING WORKING HOURS SHALL BE RECOGNIZED, WITH THE EXCEPTION OF THE WORKING HOURS PERTAINING TO THE INSTALLATION OF THE ELECTRICAL FEEDER TO PANEL 2DPEQHA. AFTER-HOURS WORK OR TEMPORARY SERVICES SHALL BE WITH PRIOR WRITTEN APPROVAL FROM BUILDING MANAGEMENT. ENCLOSE CONSTRUCTION AREA FROM OTHER AREAS TO PREVENT TRANSMISSION OF DUST, DIRT AND NOISE INTO OTHER EXISTING TENANT AREAS. PRODUCT AND WASTE TRANSFER SHALL BE COORDINATED WITH BUILDING MANAGEMENT FOR SCHEDULING OF THE ELEVATORS, DELIVERIES, AND WASTE REMOVAL.

4) EXISTING BUILDING SYSTEMS: REVIEW BUILDING STANDARDS WITH THE BUILDING ENGINEER. PERFORM A SITE VISIT TO VERIFY THE EXISTING SITE CONDITIONS. COSTS ASSOCIATED WITH UNFORESEEN CONDITIONS AS RESULT OF NOT PERFORMING A SITE VISIT SHALL NOT BE AN ENTITLEMENT FOR AN INCREASE TO THE CONTRACT. CONSTRUCTION SHALL BE PERFORMED WITHOUT INTERRUPTION TO THE BUILDING POWER, COMMUNICATIONS, SECURITY, FIRE ALARM AND LIFE SAFETY SYSTEMS, OR INTERFERENCE TO COMMON AREAS, CORRIDORS, EXITS OR EXISTING TENANTS. WHERE ANY CONSTRUCTION WOULD INTERFERE WITH THE DAILY OPERATIONS OF THE BUILDING OR OTHER TENANTS, AFTER-HOURS WORK OR TEMPORARY SERVICES SHALL BE PROVIDED AT NO INCREASE TO THE CONTRACT.

F. WARRANTEE AND GUARANTEE

1) PROVIDE WARRANTEE AND MANUFACTURERS CERTIFICATE FOR EACH PRODUCT, MINIMUM OF ONE YEAR OR LONGER AS SPECIFIED, FROM THE DATE OF OCCUPANCY. REPAIR AND/OR REPLACE ANY EQUIPMENT, DEVICES, FIXTURES, MATERIALS, ETC. WITH DEFECT AS REQUIRED AT NO INCREASE TO THE CONTRACT.

2) PROVIDE GUARANTEE OF INSTALLATION FOR A PERIOD OF ONE YEAR FROM THE DATE OF OCCUPANCY. REPAIR AND/OR REINSTALL ANY WORK WITH DEFECT AS REQUIRED AT NO INCREASE TO THE CONTRACT. PROVIDE GUARANTEE OF REWORK FOR A PERIOD OF ONE YEAR FROM THE COMPLETION OF REPAIR OR REINSTALLATION.

3) DAMAGE CAUSED TO FINISHES, SURFACES, CEILING TILES, EQUIPMENT, ETC. SHALL BE REPAIRED AND/OR REPLACED TO MATCH THE PRE-EXISTING CONDITION AT NO INCREASE TO THE CONTRACT.

G. PAY FEES AND OTHER CHARGES INCIDENTAL TO THE ELECTRICAL WORK AND OBTAIN AND PAY FOR REQUIRED LIABILITY AND CASUALTY INSURANCE, PERMITS, LICENSES, INSPECTIONS, TAXES, ETC.

H. CONSTRUCTION SHALL BE DONE DURING NIGHTS AND WEEKENDS, UNLESS OTHERWISE SPECIFIED. COORDINATE THE SCHEDULE WITH BUILDING ENGINEER.

I. ALLOW FOR 4 MAN-HOURS OF TRAINING TO THE OWNERS STAFF FOR THE OPERATION OF THE ELECTRICAL SYSTEMS.

J. SUBSTITUTIONS ARE ONLY ACCEPTABLE UPON OWNER AND ENGINEER REVIEW.

2. PRODUCTS

A. CABINETS, ENCLOSURES AND ACCESS PANELS SHALL BE CODE GAGE STEEL WITH BAKED ENAMEL FINISH AND FLANGELESS HINGES AND FASTENERS. EQUIPMENT BASES SHALL BE 3 INCH HIGH CONCRETE, STEEL BRACED AND REINFORCED WITH 1/4 INCH CHAMFER, AND SHALL EXTEND A MINIMUM OF 2 INCHES AROUND BASE OF EQUIPMENT. VIBRATION ISOLATION SHALL BE SPRING ELEMENTS IN SUSPENDED RODS AND ISOLATION PADS BELOW EQUIPMENT, ELECTRICAL CONNECTIONS SHALL BE FLEXIBLE CONDUIT.

B. CONDUITS SHALL BE HOT-DIPPED GALVANIZED OR ELECTRO-GALVANIZED STEEL, MINIMUM SIZE SHALL BE 3/4 INCH, EXCEPT POWER BRANCH CIRCUITS MAY BE 1/2 INCH (UNLESS NOTED OTHERWISE) AND FLEXIBLE CONNECTIONS TO RECESSED LIGHTING FIXTURES WHICH MAY BE 3/8 INCH. FLEXIBLE STEEL CONDUIT SHALL BE GALVANIZED STEEL, WITH UL LISTED LIQUID TIGHT JACKET AS REQUIRED, FOR FINAL CONNECTIONS TO MOTORS, RECESSED LIGHTING FIXTURES, AND LIFE SAFETY DEVICES. SUPPORTS, INCLUDING CHANNELS, ANGLES, RODS, AND FASTENERS SHALL BE HOT-DIPPED GALVANIZED STEEL. MANUFACTURER SHALL BE ALLIED, LTV/REPUBLIC, STEELDUCT, OR WHEATLAND.

C. CONDUIT FITTINGS SHALL BE STEEL, DIE CAST FITTINGS OF POT METAL ARE NOT ACCEPTABLE. ELECTRICAL METALLIC TUBING (EMT) FITTINGS SHALL BE COMPRESSION TYPE WITH INSULATED THROATS; SET SCREW FITTINGS ARE NOT ACCEPTABLE. INTERMEDIATE METAL CONDUIT (IMC) AND HEAVY WALL CONDUIT (HWG) FITTINGS SHALL BE OF THREADED JOINTS; SET SCREW AND COMPRESSION FITTINGS ARE NOT ACCEPTABLE. MANUFACTURER SHALL BE APPLETON, CROUSE HINDS/MIDWEST, OZ/GGEDNEY, RACO, STEEL CITY, OR T&B.

D. OUTLET BOXES FOR ALL TOGGLE SWITCHES, RECEPTACLES, COMMUNICATIONS DEVICES, FIRE ALARM DEVICES, AND LIFE SAFETY DEVICES SHALL INCLUDE PLASTER RINGS, DEVICE PLATES, AND COVER PLATES WHERE REQUIRED. PROVIDE BOXES SUITABLE FOR PLENUM, WET, OR HAZARDOUS LOCATIONS AS REQUIRED. DEVICE COVER PLATES SHALL BE STAINLESS STEEL PAINTED TO MATCH FINISH. MULTI-GANG OUTLET BOXES SHALL INCLUDE SUITABLE ONE-PIECE DEVICE COVER PLATE. OUTLETS LOCATED ON OPPOSITE SIDES OF A PARTITION SHALL BE STAGGERED BY 12 INCHES, MINIMUM. MANUFACTURER SHALL BE APPLETON, RACO, OR STEEL CITY.

E. CABLE MANAGEMENT RACEWAY SYSTEMS INCLUDING SURFACE MOUNTED, SUSPENDED, OR FLUSH IN-FLOOR OR IN-WALL DUCTS, ADJUSTABLE SUPPORTS, ELBOWS, FITTINGS, AND ALL REQUIRED ACCESSORIES SHALL BE OF UL STANDARD GALVANIZED STEEL, AND SHALL BE SIZED IN ACCORDANCE WITH CODE TO ADEQUATELY FACILITATE PULLING AND CONNECTING THE QUANTITY AND SIZE OF WIRES AND CABLES CONTAINED. MANUFACTURER SHALL BE WIREMOLD OR STEEL CITY.

F. WIRE SHALL BE 600 VOLT INSULATED COPPER, MINIMUM SIZE SHALL BE NO.12 AWG, WIRE SIZES NO.8 AWG AND LARGER SHALL BE STRANDED. MANUFACTURER SHALL BE AMERICAN INSULATED WIRE CORP., CERRO, COLLYER, CAPITOL WIRE AND CABLE, OKONITE, SENETOR, SOUTH WIRE, OR TRIANGLE.

G. HCF-MC CABLE IS ACCEPTABLE FOR BRANCH CIRCUIT WIRING TO FEED NEW DEVICES IN EXISTING WALLS. MC CABLE SHALL BE TERMINATED IN A JUNCTION BOX IN AN ACCESSIBLE CEILING CAVITY WITHIN 24" OF LEAVING THE WALL CAVITY. MC CABLE IS NOT ACCEPTABLE WHERE NOT PERMITTED BY CODE, FOR FEEDERS, OR TO FEED MECHANICAL EQUIPMENT.

H. CABLE SUPPORTS SHALL BE APPROPRIATE FOR THE SIZE OF CONDUIT AND TYPE OF WIRE AND CABLES. CABLE LUBRICANT SHALL BE LESS THAN SIX PERCENT SOLID RESIDUE AFTER DRYING AND SHALL NOT CONTAIN ANY WAXES, GREASES, SILICONES, OR GLYCOL OILS.

I. DISTRIBUTION PANELBOARDS SHALL BE FULLY RATED WITH COPPER PHASE, NEUTRAL, AND GROUND BUS, BRACED AT 65,000 AIC FOR 480Y/277 VOLT SYSTEMS AND 42,000 AIC FOR 208Y/120 VOLT SYSTEMS, OR MORE TO BE GREATER THAN THE AVAILABLE SHORT CIRCUIT CURRENT. OVERCURRENT DEVICES RATED 1200A OR HIGHER SHALL INCLUDE ARC FLASH REDUCTION SYSTEM. OVERCURRENT PROTECTION SHALL BE BOLT-ON MOLDED CASE CIRCUIT BREAKERS. MANUFACTURERS SHALL BE EATON, SIEMENS, GE, OR SQUARE D.

J. BRANCH PANELBOARDS SHALL BE FULLY RATED WITH COPPER PHASE, NEUTRAL, AND GROUND BUS, BRACED AT 14,000 AIC FOR 480Y/277 VOLT SYSTEMS AND 10,000 AIC FOR 208Y/120 VOLT SYSTEMS, OR MORE TO BE GREATER THAN THE AVAILABLE SHORT CIRCUIT CURRENT. INDOOR DRY AND CLEAN LOCATIONS SHALL BE NEMA TYPE 1. KITCHEN AREAS SHALL BE NEMA 4X STAINLESS STEEL. ALL PANELBOARDS WHICH ARE PART OF THE EMERGENCY SYSTEM SHALL BE PROVIDED WITH A LISTED SPD. MANUFACTURER SHALL BE EATON, SIEMENS, GE, OR SQUARE D.

K. INDIVIDUAL MOTOR STARTERS SHALL INCLUDE TWO SETS OF NORMALLY OPEN CONTACTS, ONE SET OF NORMALLY CLOSED CONTACTS, THREE OVERLOAD RELAYS, INDIVIDUALLY FUSED CONTROL TRANSFORMER, HAND-OFF-AUTO SELECTOR SWITCH FOR AUTOMATIC START, AND PILOT LIGHT(S) AS REQUIRED. COMBINATION STARTER DISCONNECTS SHALL INCLUDE FUSIBLE SWITCHES. CONTACTORS SHALL BE NEMA TYPE, WITH REPLACEABLE COIL AND CONTACT TIPS. MANUFACTURER SHALL BE EATON, SIEMENS, OR SQUARE D.

L. LOCAL DISCONNECT SWITCHES FOR ELECTRICALLY OPERATED EQUIPMENT SHALL BE HEAVY DUTY WITHIN ENCLSOURE SUITABLE FOR THE LOCATION. FUSIBLE AND NON-FUSIBLE DISCONNECT SWITCHES 600 AMPS AND SMALLER SHALL BE QUICK-MAKE, QUICK-BREAK TYPE. MANUFACTURER SHALL BE EATON OR SQUARE D.

M. OVERCURRENT AND SHORT CIRCUIT PROTECTION WITHIN FUSIBLE SWITCHES SHALL BE CLASS RK-1 CURRENT LIMITING TIME DELAY FUSES FOR SWITCHES RATED 600 AMPS AND SMALLER. MANUFACTURER SHALL BE BUSSMANN.

N. TRANSFORMERS SHALL BE COPPER WOUND, DRY TYPE VENTILATED, 115°C RISE WITH NEMA STANDARD VOLTAGE TAPS AND SOUND RATINGS. TRANSFORMERS SERVING NON-LINEAR LOADS SHALL BE K-13 RATED OR BETTER FOR THE ORDER AND MAGNITUDE OF HARMONIC CONTENT. TRANSFORMERS SERVING ISOLATED GROUND DISTRIBUTION SYSTEMS SHALL BE SHIELDED ISOLATION TYPE. MANUFACTURER SHALL BE MAGNETEK/JEFFERSON, SOLA/HEAVY DUTY, SQUARE D/SORGEL.

O. GROUNDING SYSTEM, INCLUDING SERVICE AND EQUIPMENT GROUNDING AND BONDING, SHALL BE IN ACCORDANCE WITH CODE AND SHALL CONNECT ALL ELECTRICALLY OPERATED EQUIPMENT. PROVIDE A SEPARATE GREEN GROUND WIRE FOR EACH BRANCH CIRCUIT AND FEEDER.

P. RECEPTACLES SHALL BE DUPLEX NEMA 5-20R, BACK AND SIDE WIRED, HOSPITAL SPECIFICATION GRADE, UNLESS NOTED OTHERWISE. SPECIAL RECEPTACLE CONFIGURATIONS SHALL BE AS REQUIRED OR AS INDICATED ON THE CONTRACT DOCUMENTS. GENERAL RECEPTACLE COLOR SHALL BE IVORY FOR NORMAL POWERED RECEPTACLES AND RED FOR CRITICAL POWERED RECEPTACLES UNLESS SPECIFIED OTHERWISE, VERIFY COLOR WITH ARCHITECT. MANUFACTURER SHALL BE BRYANT, HUBBELL, LEVITON, OR PASS & SEYMOUR.

Q. NEW FIRE ALARM DEVICES PROVIDED WITHIN EXISTING SYSTEMS SHALL MATCH EXISTING DEVICE MANUFACTURER AND TYPE. STROBES SHALL MEET ADA GUIDELINES FOR THE APPLICATION AND SHALL BE RATED 75CD. STROBES RATED 15/75CD WITH 75CD ON AXIS ARE NOT ACCEPTABLE. EXISTING FIRE ALARM DEVICES SHALL BE EXTENDED AS REQUIRED. EXISTING FIRE ALARM EQUIPMENT SHALL BE EXPANDED AS REQUIRED WITH ANY ADDITIONAL COMPONENTS FOR PROPER OPERATION OF NEW DEVICES ON EXISTING EQUIPMENT.

R. TOGGLE SWITCHES SHALL BE SINGLE POLE 20 AMP, 120-277 VOLT, BACK AND SIDE WIRED, SPECIFICATION GRADE, UNLESS NOTED OTHERWISE. SPECIAL SWITCHES, INCLUDING 3-WAY, PILOT LIGHT AND MOMENTARY CONTACT, SHALL BE AS REQUIRED OR AS INDICATED ON THE CONTRACT DOCUMENTS. COLOR SHALL BE WHITE UNLESS SPECIFIED OTHERWISE, VERIFY COLOR WITH ARCHITECT. MANUFACTURER SHALL BE BRYANT, HUBBELL, LEVITON, OR LEGRAND.

3. EXECUTION

A. PENETRATIONS AND CHANNELS IN FLOORS AND WALLS SHALL BE VIA CUTTING AND CORING AS REQUIRED FOR THE SIZE OF PRODUCT, ONLY IN ACCORDANCE WITH THE ARCHITECT AND ENGINEER RECOMMENDATIONS, AND AS SCHEDULED WITH THE BUILDING MANAGEMENT. PATCH AND FILL SLEEVES, INSERTS, PENETRATIONS, AND CHANNELS WITH APPROPRIATE CODE APPROVED FIRE SAFING OR FILLING TO MATCH OR RESTORE THE ORIGINAL FIRE RATING OF THE CONSTRUCTION.

B. MAKE FINAL CONNECTIONS TO VIBRATING EQUIPMENT, FIXTURES, AND DEVICES WITH FLEXIBLE METAL CONDUIT OR LIQUIDTIGHT FLEXIBLE METAL CONDUIT AS REQUIERD. EXTEND GROUND WIRE THROUGH FLEXIBLE CONNECTIONS.

C. INSTALL CONDUIT, FITTINGS, SUPPORTS, ETC. IN ACCORDANCE WITH CODES, STANDARDS, AND MANUFACTURERS RECOMMENDATIONS. THE VOLTAGES IDENTIFIED IN THE FOLLOWING SCHEDULES ARE LINE-TO-LINE OR LINE-TO-NEUTRAL. INTERIOR CONCEALED LOCATIONS ARE THOSE LOCATIONS WHICH ARE ABOVE CEILINGS, WITHIN WALLS, WITHIN FLOOR SLABS, AND WITHIN DEDICATED ELECTRICAL ROOMS. CONDUIT INSTALLATION SHALL BE AS FOLLOWS UNLESS NOTED OTHERWISE:

VOLTAGE LOCATION	0V THRU 50V	ABOVE 50V THRU 250V	ABOVE 250V THRU 600V	ABOVE 600V
INTERIOR CONCEALED	EMT	EMT	≤ 2"EMT ≥ 2 1/2"IMC	HWG
INTERIOR EXPOSED	EMT	≤ 2"EMT ≥ 2 1/2"IMC	IMC	HWG
EXTERIOR AND HAZARDOUS LOCATIONS	EMT	IMC	HWG	HWG

D. INSTALLATIONS WITHIN AIR HANDLING SPACES, INCLUDING PLENUM CEILINGS AND BUILT UP AIR HANDLING SYSTEMS SHALL BE APPROVED FOR PLENUM INSTALLATION AND BE IN STRICT ACCORDANCE WITH ALL APPLICABLE CODES.

E. INSTALL PULL BOXES, JUNCTION BOXES, AND OUTLET BOXES IN ACCORDANCE WITH CODES, STANDARDS, AND MANUFACTURERS RECOMMENDATIONS. BOXES SHALL INCLUDE ACCESSIBLE COVERS, SHALL BE FABRICATED OF HEAVY GAGE GALVANIZED STEEL, AND SHALL BE SIZED WITH CODE TO ADEQUATELY FACILITATE PULLING AND CONNECTING THE QUANTITY OF WIRES, CABLES, AND FEEDERS CONTAINED. CONDUIT TERMINATIONS SHALL BE MADE WITH BUSHINGS AND LOCKNUTS. SUPPORTS FOR CONDUITS AND BOXES SHALL BE SUSPENDED DIRECTLY TO THE BUILDING STRUCTURAL COMPONENTS AND IN NO CASE SHALL THEY BE ATTACHED TO SUSPENDED CEILING GRID, DUCTWORK, OR PIPING COMPONENTS.

F. INSTALL FEEDERS AND BRANCH CIRCUIT WIRING IN ACCORDANCE WITH CODES, STANDARDS, AND MANUFACTURERS RECOMMENDATIONS. COORDINATE INSTALLATION WITH PANEL MANUFACTURERS LUG PROVISIONS. INSTALL NORMAL POWER AND ESSENTIAL SYSTEMS WIRING WITHIN CONTINUOUS METAL RACEWAYS. INSTALL CONCEALED SECURITY AND COMMUNICATIONS WIRING WITHIN CONTINUOUS METAL RACEWAYS. SEPARATE EACH SYSTEM INTO INDEPENDENT RACEWAYS. PROVIDE CABLE SUPPORTS AS REQUIRED. TERMINATE CABLES PER CODE AND MANUFACTURERS RECOMMENDATIONS. PROVIDE (2) HOLE LUGS FOR CABLES 250 KCMIL AND LARGER. POWER WIRING INSULATION SHALL BE AS FOLLOWS UNLESS NOTED OTHERWISE:

WIRE LOCATION	300 KCMIL AND SMALLER	350 KCMIL AND LARGER	ENVIRONMENTAL CONDITIONS
INTERIOR LOCATIONS	THHN/THWN	XHHW	DRY
EXTERIOR LOCATIONS	THHN/THWN THHN/THWN	XHHW XHHW-2	DAMP WET

G. INSTALL ELECTRICAL DISTRIBUTION EQUIPMENT AND DEVICES IN ACCORDANCE WITH CODES, STANDARDS, AND MANUFACTURERS RECOMMENDATIONS.

H. INSTALL GROUNDING SYSTEMS IN ACCORDANCE WITH CODES, STANDARDS, AND MANUFACTURERS RECOMMENDATIONS.

I. INSTALL LIGHTING AND ASSOCIATED CONTROLS, INCLUDING FIXTURES, DRIVERS, TOGGLE SWITCHES, SLIDE DIMMERS, DIMMING EQUIPMENT, LIGHTING CONTACTORS, ETC. IN ACCORDANCE WITH CODE, STANDARDS, AND MANUFACTURER'S RECOMMENDATIONS.

J. INSTALL SINGLE AND MULTIPLE DEVICE COVER PLATES AS REQUIRED. EXTEND EXISTING DEVICES TO FINISHED SURFACE AS REQUIRED.

K. INSTALL FIRE ALARM AND OTHER LIFE SAFETY SYSTEMS IN ACCORDANCE WITH CODES, STANDARDS, AND MANUFACTURER'S RECOMMENDATIONS.

L. INSTALL INSCRIPTION PLATES AND IDENTIFICATION MARKINGS FOR PRODUCTS AND WIRING INCLUDING THE SAME INSCRIPTIONS WHERE INDICATED ON THE CONTRACT DOCUMENTS. INSTALL PLASTIC LAMINATE NAMEPLATES ON ENCLOSURES FOR EACH DEVICE WITHIN METERING EQUIPMENT, DISTRIBUTION PANELBOARDS, BRANCH PANELBOARDS, MOTOR STARTERS, DISCONNECT SWITCHES, TRANSFORMERS, AND CONTACTORS. NAMEPLATES SHALL BE WHITE WITH BLACK CORE, 1-1/4 INCHES BY 3 INCHES MINIMUM, WITH 3/16 INCH LETTERING, SECURED TO EQUIPMENT WITH TWO MACHINE SCREWS. PREPARE AND INSTALL TYPE-WRITTEN PANEL DIRECTORY WITHIN EACH BRANCH PANEL. DEVICE PLATES SHALL BE ENGRAVED FOR TOGGLE SWITCHES AND OTHER DEVICES WHOSE FUNCTION IS NOT READILY APPARENT. MARKERS SHALL BE SELF-STICKING FOR EACH WIRE AND CABLE AT TERMINATIONS AND AT EACH ACCESSIBLE POINT IN EQUIPMENT AND RACEWAY.

M. CLEAN ELECTRICAL APPARATUS PRIOR TO COMPLETION OF CONSTRUCTION. KEEP WORK AREAS CLEAN AT ALL TIMES.

N. ALTERATIONS AND DEMOLITION OF EXISTING SYSTEMS SHALL BE AS FOLLOWS:

1) PROVIDE ALL ALTERATIONS AND DEMOLITION OF THE EXISTING ELECTRICAL INSTALLATION AS REQUIRED, INCLUDING ANY INCIDENTAL MATERIALS TO EXECUTE ALL REMOVAL, REROUTING, RELOCATION, AND ANY OTHER MODIFICATIONS FOR PROPER ACCOMMODATION OF ALL NEW CONSTRUCTION AS INDICATED ON THE CONTRACT DOCUMENTS. ALL ALTERATIONS AND DEMOLITION SHALL BE AS INDICATED ON THE CONTRACT DOCUMENTS OR AS REQUIRED, INCLUDING ANY MODIFICATIONS NOT SPECIFICALLY IDENTIFIED ON ANY CONTRACT DOCUMENTS BUT REQUIRED TO COMPLETE ALL NEW CONSTRUCTION.

2) PROVIDE ALL MODIFICATIONS TO EXISTING EQUIPMENT AS REQUIRED OR AS INDICATED ON THE CONTRACT DOCUMENTS IN STRICT ACCORDANCE WITH THE EXISTING PRODUCT MANUFACTURERS RECOMMENDATIONS.

3) EXISTING RACEWAY, WIRE AND CABLE EXTENDING THROUGH THE CONSTRUCTION AREA BUT SERVING AREAS OUTSIDE THE CONTRACT SHALL BE REROUTED AND RECONNECTED AS REQUIRED. ALL MODIFICATIONS SHALL BE WITHOUT ANY INTERRUPTION TO THE BUILDING POWER, COMMUNICATIONS, SECURITY, FIRE ALARM AND LIFE SAFETY SYSTEMS, OR INTERFERENCE TO OTHER AREAS OR TENANTS. WHERE ANY MODIFICATIONS WOULD INTERFERE WITH THE DAILY OPERATIONS OF THE BUILDING OR OTHER TENANTS, AFTER-HOURS WORK OR TEMPORARY SERVICES SHALL BE PROVIDED WITH PRIOR WRITTEN APPROVAL FROM THE BUILDING.

4) EXISTING CONDUIT, WIRE, CABLE, SUPPORTS, HANGERS, AND OTHER ELECTRICAL INSTALLATION WHICH IS REMOVED, SHALL BE COMPLETELY REMOVED, BACK TO THE FIRST DEVICE OR THAT EQUIPMENT WHICH IS UNAFFECTED BY THE MODIFICATIONS. CONDUIT WHICH IS BURIED IN CONCRETE OR OTHERWISE INACCESSIBLE MAY BE ABANDONED AND CAPPED AT EACH END. ALL WIRE AND CABLE SHALL BE REMOVED FROM ANY ABANDONED CONDUIT.

5) EXISTING ELECTRICAL MATERIALS AND EQUIPMENT, INCLUDING LIGHTING FIXTURES, SWITCHES, RECEPTACLES, SPEAKERS, CONDUIT, OUTLET BOXES, FITTINGS, WIRE, CABLE, AND OTHER EQUIPMENT AND DEVICES WHICH ARE REMOVED SHALL REMAIN THE PROPERTY OF THE OWNER AND SHALL BE STORED OR DISCARDED AS DIRECTED.

6) REUSE EXISTING ELECTRICAL PRODUCTS AS INDICATED ON THE CONTRACT DOCUMENTS ONLY AS IS FOUND PRACTICAL. EXAMINE THE CONDITION OF ALL SUCH PRODUCTS, DETERMINE SUITABILITY FOR RE-USE, AND PERIODICALLY NOTIFY THE ARCHITECT/ENGINEER OF FINDINGS FOR FINAL ACCEPTANCE OF RE-USE. WIRE AND CABLE FOR NEW CONSTRUCTION OR EXTENSION OF AN EXISTING INSTALLATION SHALL BE NEW, IN NO CASE SHALL EXISTING WIRE AND CABLE BE REUSED.

This sheet of drawings has not been reviewed for code compliance.

Salas O'Brien

salasobrien.com

Dublin
2751 Tuller Pkwy
Dublin, OH 43017

Registration:

CONFIDENTIAL
THIS DRAWING AND ASSOCIATED DESIGN ELEMENTS ARE CONFIDENTIAL AND THE PROPERTY OF SALAS O'BRIEN, WHICH RETAINS ALL COMMON LAW, COPYRIGHT, STATUTORY AND OTHER RIGHTS THERETO. ANY UNAUTHORIZED USE, REUSE OR REPRODUCTION IS PROHIBITED. UNLESS OTHERWISE AGREED TO BY SALAS O'BRIEN, THIS DRAWING (AS WELL AS ANY COPIES) SHALL BE RETURNED TO SALAS O'BRIEN UPON REQUEST.

PROFESSIONAL SEAL

COLORADO LICENSED MICHAEL P THOMPSON 53150 PROFESSIONAL ENGINEER

8/14/2023

ISSUE DATE	DESCRIPTION
08/01/2023	100% CD

2023-00034-00
HEALTHTRUST
FACILITIGROUP

TMCA CATH LAB HVAC DEHUMIDIFICATION

1501 S. POTOMAC ST,
AURORA, CO 80012

REVISIONS

Δ	DESCRIPTION	DATE
0	ISSUED FOR CONSTRUCTION	08/01/23

CHECKED BY	DRAWN BY
TJS	CAH

SHEET NAME

ELECTRICAL SPECS & DEMO NOTES

SHEET NUMBER	REVISION
E-002	0

Autodesk Docs://080-2023-0034 TMCA Cathlab Dehumidification Upgrades/2023-00034 TMCA Cathlab-Mech_R22_R2.rvt

8/1/2023 11:44:35 AM

RSN 1743619 Permit #2023 2378137-LT

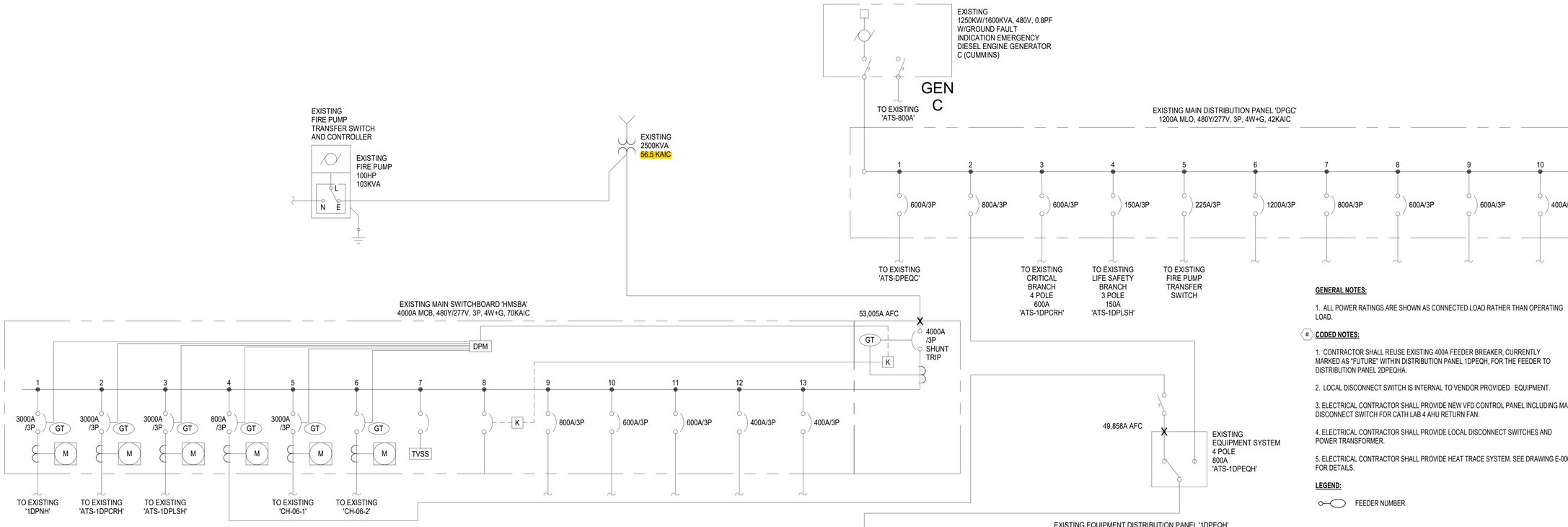

GENERAL NOTES:

1. ALL POWER RATINGS ARE SHOWN AS CONNECTED LOAD RATHER THAN OPERATING LOAD.

 # CODED NOTES:

1. CONTRACTOR SHALL REUSE EXISTING 400A FEEDER BREAKER, CURRENTLY MARKED AS "FUTURE" WITHIN DISTRIBUTION PANEL 1DPEQH, FOR THE FEEDER TO DISTRIBUTION PANEL 2DPEQHA.
2. LOCAL DISCONNECT SWITCH IS INTERNAL TO VENDOR PROVIDED EQUIPMENT.
3. ELECTRICAL CONTRACTOR SHALL PROVIDE NEW VFD CONTROL PANEL INCLUDING MAIN DISCONNECT SWITCH FOR CATH LAB 4 AHU RETURN FAN.
4. ELECTRICAL CONTRACTOR SHALL PROVIDE LOCAL DISCONNECT SWITCHES AND POWER TRANSFORMER.
5. ELECTRICAL CONTRACTOR SHALL PROVIDE HEAT TRACE SYSTEM. SEE DRAWING E-006 FOR DETAILS.

LEGEND:

⬭—⬭ FEEDER NUMBER

EXISTING EQUIPMENT DISTRIBUTION PANEL '1DPEQH'	
EXISTING DEMAND LOAD (30-DAY LOAD STUDY):	238.10 KVA
ADD 25% DEMAND LOAD:	297.63 KVA
REMOVED LOAD:	0.00 KVA
ADDED LOAD:	228.60 KVA
NET DEMAND LOAD:	524.70 KVA OR 631.14A

AVAILABLE FAULT CURRENT CALCULATIONS

UTILITY CONTRIBUTION

Utility Fault Current:	56500	Amperes
Utility Transformer Power (kVA):	2500	kVA
System Voltage (E):	480	Volts
Utility Transformer FLA (I):	3007.121	Amperes

Transformer FLA (I) = (kVAx1000)/(Ex1.732)

FAULT CONTRIBUTION FROM UTILITY TO HMSBA

System Voltage (EL-L):	480	Volts
Conductor Material:	Copper	
Conductor Size:	500	AWG or MCM
# of sets (n):	11	
Raceway Material:	PVC	
Conductor Constant (C):	26706	
Length of Circuit (L):	95	Feet
Available Short Circuit Current (ISCA)	56500	Amperes

f = 1.732 x L x ISCA / C x n x EL-L = 0.066

M = 1 / 1+f = 0.938

3-Phase ISCA (A) = ISCA x M = **53,005**

FAULT CONTRIBUTION FROM HMSBA TO ATS-1DPEQH

System Voltage (EL-L):	480	Volts
Conductor Material:	Copper	
Conductor Size:	300	AWG or MCM
# of sets (n):	3	
Raceway Material:	Steel	
Conductor Constant (C):	18177	
Length of Circuit (L):	18	Feet
Available Short Circuit Current (ISCA)	53005	Amperes

f = 1.732 x L x ISCA / C x n x EL-L = 0.063

M = 1 / 1+f = 0.941

3-Phase ISCA (A) = ISCA x M = **49,858**

FAULT CONTRIBUTION FROM ATS-1DPEQH TO 1DPEQH

System Voltage (EL-L):	480	Volts
Conductor Material:	Copper	
Conductor Size:	300	AWG or MCM
# of sets (n):	3	
Raceway Material:	Steel	
Conductor Constant (C):	18177	
Length of Circuit (L):	10	Feet
Available Short Circuit Current (ISCA)	49,858	Amperes

f = 1.732 x L x ISCA / C x n x EL-L = 0.033

M = 1 / 1+f = 0.968

3-Phase ISCA (A) = ISCA x M = **48,265**

FAULT CONTRIBUTION FROM 1DPEQH to 2DPEQHA

System Voltage (EL-L):	480	Volts
Conductor Material:	Copper	
Conductor Size:	500	AWG or MCM
# of sets (n):	1	
Raceway Material:	Steel	
Conductor Constant (C):	22185	
Length of Circuit (L):	300	Feet
Available Short Circuit Current (ISCA)	48,265	Amperes

f = 1.732 x L x ISCA / C x n x EL-L = 1.956

M = 1 / 1+f = 0.338

3-Phase ISCA (A) = ISCA x M = **14,386**

FEEDER SCHEDULE

FEEDER NUMBER	FROM	TO	QTY. (SETS)	WIRES QTY.	WIRES SIZE	WIRES EGC	CONDUIT MIN. SIZE	CONDUIT TYPE	OCP (AMP)	VOLT DROP	COMMENTS
1	'1DPEQH'	'2DPEQHA'	1	4	750	1/0	4	EMT	400	1.57%	NEW COPPER FEEDER
2	'2DPEQHA'	'AHU-4'	1	3	12	12	3/4	RGS	15	1.03%	NEW COPPER FEEDER
3	'2DPEQHA'	'RF-AHU-4'	1	3	12	12	3/4	RGS	15	0.23%	NEW COPPER FEEDER
4	'2DPEQHA'	'CH-5'	1	3	350	2	3	RGS	250	0.37%	NEW COPPER FEEDER
5	'2DPEQHA'	'H-AHU-4'	1	3	10	10	3/4	RGS	25	1.15%	NEW COPPER FEEDER
6	'2DPEQHA'	CHILLER AUX PUMP ENCLOSURE 'PH-CH-5'	1	3	10	10	3/4	RGS	30	0.81%	NEW COPPER FEEDER
7	'2DPEQHA'	'TR-PHP-4'	1	2	12	12	3/4	RGS	15	0.11%	NEW COPPER FEEDER
8	'TR-PHP-4'	'PHP-4'	1	2	12	12	3/4	EMT	4	0.20%	NEW COPPER FEEDER
9	'2DPEQHA'	'PH-CH-5-HT1'	1	2	12	12	3/4	RGS	15	0.07%	NEW COPPER FEEDER
10	'2DPEQHA'	'PH-CH-5-HT2'	1	2	12	12	3/4	RGS	15	0.04%	NEW COPPER FEEDER

Service Equipment shall be permanently
And legibly marked to show the available Fault
current and date. 2023 NEC 110.24(A)(B)

City of Aurora Building Division
Reviewed for Code Compliance
Approved as Noted: nmartine
Date: Sep 06, 2023
2021 INTERNATIONAL CODES & 2023 NEC

Salas O'Brien
salasobrien.com
Dublin
2751 Tuller Pkwy
Dublin, OH 43017
Registration:

CONFIDENTIAL
THIS DRAWING AND ASSOCIATED DESIGN ELEMENTS ARE CONFIDENTIAL AND THE PROPERTY OF SALAS O'BRIEN, WHICH RETAINS ALL COMMON LAW, COPYRIGHT, STATUTORY AND OTHER RIGHTS THERETO. COPYING, USE OR DISCLOSURE WITHOUT PERMISSION IS PROHIBITED, UNLESS OTHERWISE AGREED TO BY SALAS O'BRIEN. THIS DRAWING (AS WELL AS ANY COPIES) SHALL BE RETURNED TO SALAS O'BRIEN UPON REQUEST.

PROFESSIONAL SEAL

COLORADO LICENSED MICHAEL P THOMPSON 52150 PROFESSIONAL ENGINEER
8/14/2023

ISSUE DATE	DESCRIPTION
08/01/2023	100% CD

2023-00034-00
HEALTHTRUST
FACILITIGROUP

TMCA CATH LAB HVAC DEHUMIDIFICATION

1501 S. POTOMAC ST,
AURORA, CO 80012

REVISIONS

Δ	DESCRIPTION	DATE
0	ISSUED FOR CONSTRUCTION	08/01/23

CHECKED BY TJS
DRAWN BY CAH

SHEET NAME

ELECTRICAL ONE-LINE DIAGRAM

SHEET NUMBER E-003
REVISION 0

Autodesk Docs://080-2023-0034 TMCA Cathlab Dehumidification Upgrades/2023-00034 TMCA Cathlab-Mech_R22_R2.rvt
8/1/2023 11:44:39 AM

RSN 1743619 Permit #2023 2378137-LT

(#) CODED NOTES:

1. CONTRACTOR SHALL REUSE EXISTING 400A FEEDER BREAKER, CURRENTLY MARKED AS "FUTURE" WITHIN DISTRIBUTION PANEL 1DPEQH, FOR THE FEEDER TO DISTRIBUTION PANEL 2DPEQHA.

MOTOR/EQUIPMENT SCHEDULE - NOTES 1,2

TAG	DESCRIPTION	LOCATION	ELECTRICAL RATING					FEEDER/SOURCE - NOTE 1				DISCONNECT		CONTORLLER		NOTES
			KVA	FLA	HP	VOLT	PH	PANEL	CCT	OCPD	WIRING	INTEGRAL	BY EC	SIZE	TYPE	
AHU-4	CATH LAB 4 AIR HANDLING UNIT	SECOND FLOOR MECH PENTHOUSE	8.40	10.10	-	480	3	2DPEQHA	1,3,5	15A/3P	3P-3W+G	-	600V, 30A/3P DS	NEMA 1	VFD	NON-FUSED DS
RF-AHU-4	CATH LAB 4 AIR HANDLING UNIT RETURN AIR FAN	SECOND FLOOR ROOF	2.49	3.00	1.50	480	3	2DPEQHA	2,4,6	15A/3P	3P-3W+G	-	600V, 30A/3P DS	NEMA 3R	VFD	VFD W/ INTEGRAL DS
H-AHU-4	CATH LAB 4 AIR HANDLING UNIT HUMIDIFIER	SECOND FLOOR MECH PENTHOUSE	14.96	18.00	-	480	3	2DPEQHA	8,10,12	25A/3P	3P-3W+G	-	600V, 30A/3P DS	NEMA 1	-	NON-FUSED DS
CH-5	CATH LAB 4 CHILLER	SECOND FLOOR ROOF	175.33	210.90	-	480	3	2DPEQHA	7,9,11	250/3P	3P-3W+G	X	-	NEMA 3R	FVNR & VSD	
PH-CH-5	CATH LAB 4 CHILLER PUMP HOUSE ENCLOSURE	SECOND FLOOR ROOF	15.80	19.00	-	480	3	2DPEQHA	13,15,17	30/3P	3P-3W+G	X	-	NEMA 1	VFD	
TR-PHP-4	CATH LAB 4 AHU PRE-HEAT CIRCULATION PUMP TRANSFORMER	SECOND FLOOR MECH PENTHOUSE	0.75	1.56	-	480	1	2DPEQHA	19,21	15/2P	1P-2W+G	-	600V, 30A/2P DS	-	-	FUSED DS
PHP-4	CATH LAB 4 AHU PRE-HEAT CIRCULATION PUMP	SECOND FLOOR MECH PENTHOUSE	0.53	4.40	1/6	120	1	2DPEQHA	19,21	4A/2P	1P-2W+G	-	-	ODP	VSD	INTERNAL VARIABLE SPEED CONTROL
PH-CH-5-HT1	CATH LAB 4 CHILLER PUMP HOUSE ENCLOSURE CHILLED WATER PIPE HEAT TRACE CONTROLLER	SECOND FLOOR ROOF	0.11	0.33	-	277	1	2DPEQHA	23	15/1P	1P-2W+G	-	-	NEMA 3R	HEAT TRACE	nVENT RAYCHEM 460 OR EQUAL
PH-CH-5-HT2	CATH LAB 4 CHILLER PUMP HOUSE ENCLOSURE SANITARY DRAIN PIPE HEAT TRACE CONTROLLER	SECOND FLOOR ROOF	0.07	0.23	-	277	1	2DPEQHA	24	15/1P	1P-2W+G	-	-	NEMA 3R	HEAT TRACE	nVENT RAYCHEM 460 OR EQUAL

NOTES:
1. REFER TO BRANCH CIRCUIT WIRING NOTES ON SHEET E-001
2. COORDINATE EXACT EQUIPMENT REQUIREMENTS WITH OTHER TRADES PRIOR TO ROUGH-IN AND INSTALLATION

PANEL DESIGNATION: 1DPEQH (EX) — LOC: ELEC RM 1133 — MOUNTING: SURFACE — FAULT DUTY: 65,000A
MLO: X — MAIN: N/A — BUS: 800A — VOLTS: 480/277 — PHASE: 3 — WIRE: 4

EQUIPMENT DESCRIPTION	DMD	VOLT AMPS A	VOLT AMPS B	VOLT AMPS C	BRKR SIZE			BRKR SIZE	VOLT AMPS A	VOLT AMPS B	VOLT AMPS C	DMD	EQUIPMENT DESCRIPTION
(EXISTING) TRANSFORMER T2EQL	G					1	2					G	(EXISTING) TRANSFORMER T5EQL
	G				250/3	3	4	250/3				G	
	G					5	6					G	
(EXISTING) 6DPEQ-ELEV	G					7	8					G	(EXISTING) PANEL 2DPEQH
	G				400/3	9	10	400/3				G	
	G					11	12					G	
(EXISTING) PANEL 5DPEQH	G					13	14					G	SPACE
	G				400/3	15	16					G	
	G					17	18					G	
SPACE	G					19	20					G	(EXISTING) JOCKEY PUMP JP-1
	G					21	22	15/3				G	
	G					23	24					G	
PANEL 2DPEQHA	G	72593				25	26					G	SPACE
	G		72593		400/3	27	28					G	
	G			72329	(1)	29	30					G	
SPACE	G					31	32					G	SPACE
	G					33	34					G	
	G					35	36					G	
SPACE	G					37	38					G	SPACE
	G					39	40					G	
	G					41	42					G	

TOTAL "A"	72593		171293	513.6 CONN.KVA
TOTAL "B"	72593		171293	618.1 CONN. AMPS
TOTAL "C"	72329		171029	513.6 DEMAND KVA
TOTAL "A,B,C "			513616 CONN.	618.1 DEMAND AMPS
			513616 DEMAND	524.7 DESIGN KVA
			524653 DESIGN	631.4 DESIGN AMPS

PANEL DESIGNATION: 2DPEQHA (NEW) — LOC: MECH RM 2042A — MOUNTING: SURFACE — FAULT DUTY: 65,000A
MLO: X — MAIN: N/A — BUS: 400A — VOLTS: 480/277 — PHASE: 3 — WIRE: 4

EQUIPMENT DESCRIPTION	DMD	VOLT AMPS A	VOLT AMPS B	VOLT AMPS C	BRKR SIZE			BRKR SIZE	VOLT AMPS A	VOLT AMPS B	VOLT AMPS C	DMD	EQUIPMENT DESCRIPTION
CATH LAB 4 AIR HANDLING UNIT AHU-4	G	2800				1	2		830			G	CATH LAB 4 AHU RETURN AIR FAN RF-AHU-4
	G		2800		15/3	3	4	15/3		830		G	
	G			2800		5	6				830	G	
CATH LAB 4 CHILLER CH-5	G	58445				7	8		4988			G	CATH LAB 4 AHU HUMIDIFIER H-AHU-4
	G		58445		250/3	9	10	25/3		4988		G	
	G			58445		11	12				4988	G	
CATH LAB 4 CHILLER AUXILLIARY PUMP ENCLOSURE PH-CH-5	G	5267				13	14					G	SPARE
	G		5267		30/3	15	16	15/3				G	
	G			5267		17	18					G	
AHU PRE-HEAT CIRC PUMP TRANSFORMER TR-PHP-4	G	264				19	20					G	SPARE
	G		264		15/2	21	22	15/2				G	
CHILLER AUX PUMP ENCL CHW PIPE HEAT TRACE PH-CH-5-HT1	G			0.11	15/1	23	24	15/1			0.07	G	CHILLER AUX PUMP ENCL SAN DRAIN PIPE HEAT TRACE PH-CH-5-HT2
	G					25	26					G	
	G					27	28					G	
	G					29	30					G	
	G					31	32					G	
	G					33	34					G	
	G					35	36					G	
	G					37	38					G	
	G					39	40					G	
	G					41	42					G	

TOTAL "A"	66775		72593	5818	217.5 CONN.KVA
TOTAL "B"	66775		72593	5818	261.8 CONN. AMPS
TOTAL "C"	66511		72330	5818	217.5 DEMAND KVA
TOTAL "A,B,C "			217516 CONN.		261.8 DEMAND AMPS
			217516 DEMAND		228.6 DESIGN KVA
			228553 DESIGN		275.0 DESIGN AMPS

Every circuit and circuit modification shall be provided with a legible and permanent description that complies with all of the following conditions as applicable (see 1-6). 2023 NEC 408.4

City of Aurora Building Division
Reviewed for Code Compliance
Approved as Noted: nmartine
Date: Sep 06, 2023
2021 INTERNATIONAL CODES & 2023 NEC

Salas O'Brien
salasobrien.com
Dublin
2751 Tuller Pkwy
Dublin, OH 43017
Registration:

CONFIDENTIAL
THIS DRAWING AND ASSOCIATED DESIGN ELEMENTS ARE CONFIDENTIAL AND THE PROPERTY OF SALAS O'BRIEN, WHICH RETAINS ALL COMMON LAW, COPYRIGHT, STATUTORY AND OTHER RIGHTS THERETO. ANY REPRODUCTION, PUBLICATION OR REDISTRIBUTION IS PROHIBITED, UNLESS OTHERWISE AGREED TO BY SALAS O'BRIEN, THIS DRAWING (AS WELL AS ANY COPIES) SHALL BE RETURNED TO SALAS O'BRIEN UPON REQUEST.

PROFESSIONAL SEAL

COLORADO LICENSED — MICHAEL P THOMPSON — 52150 — PROFESSIONAL ENGINEER
8/14/2023

ISSUE DATE	DESCRIPTION
08/01/2023	100% CD

2023-00034-00
HEALTHTRUST FACILITIGROUP

TMCA CATH LAB HVAC DEHUMIDIFICATION

1501 S. POTOMAC ST,
AURORA, CO 80012

REVISIONS

Δ	DESCRIPTION	DATE
0	ISSUED FOR CONSTRUCTION	08/01/23

CHECKED BY TJS
DRAWN BY CAH

SHEET NAME

ELECTRICAL PANEL SCHEDULES

SHEET NUMBER E-004
REVISION 0

Autodesk Docs://080-2023-0034 TMCA Cathlab Dehumidification Upgrades/2023-00034 TMCA Cathlab-Mech_R22_R2.rvt
8/1/2023 11:44:41 AM

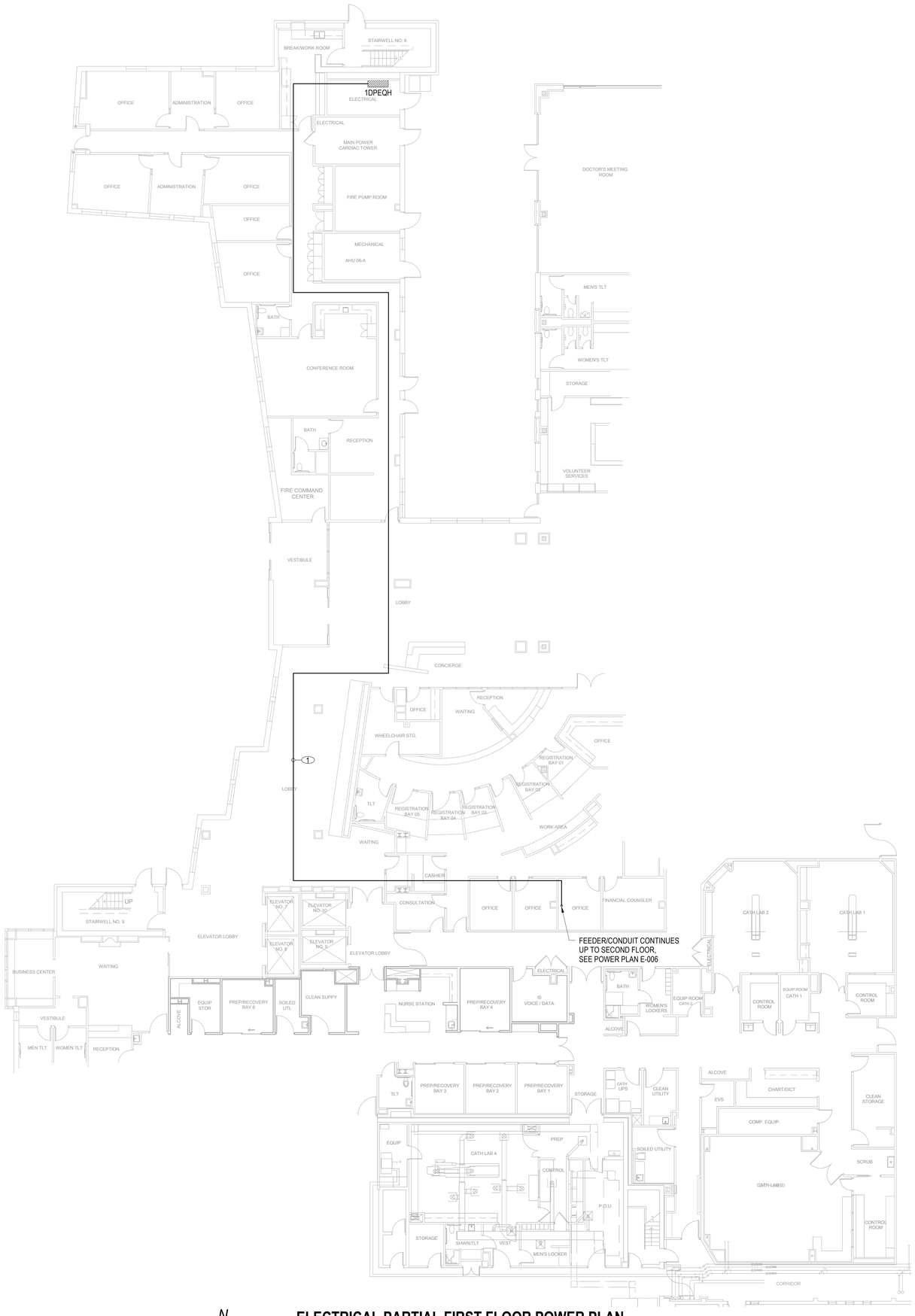

N

ELECTRICAL PARTIAL FIRST FLOOR POWER PLAN

SCALE: 3/32" = 1'-0"

GENERAL NOTES:

1. ALL ELECTRICAL WORK SHALL BE COMPLETED DURING WEEK NIGHT OR WEEKEND HOURS TO LIMIT THE AMOUNT OF DISRUPTION OF PERSONNEL TRAFFIC THROUGH MAIN LOBBY AND ADJACENT CORRIDORS.

2. CONTRACTOR SHALL ENSURE THAT WORK ABOVE FIRST FLOOR CEILING BE CONDUCTED IN INCREMENTS OF 12'-0" OR LESS AS TO LIMIT THE AMOUNT OF EXPOSED CEILING THROUGH MAIN LOBBY AND WITHIN CORRIDORS.

3. SEE DRAWING E-003 FOR FEEDER SCHEDULE FOR ALL FEEDER NUMBERS DEPICTED ON THIS DRAWING.

4. ROUTING OF NEW ELECTRICAL FEEDER IS APPROXIMATE. ELECTRICAL CONTRACTOR SHALL COORDINATE FINAL ROUTE WITH EXISTING SITE CONDITIONS. ELECTRICAL PULL BOXES SHALL BE PROVIDED TO FACILITATE CABLE PULLING TO MEET ALL NEC CODE REQUIREMENTS.

LEGEND:

FEEDER NUMBER

City of Aurora Building Division
Reviewed for Code Compliance
Approved as Noted: nmartine
Date: Sep 06, 2023
2021 INTERNATIONAL CODES & 2023 NEC

Salas O'Brien
salasobrien.com
Dublin
2751 Tuller Pkwy
Dublin, OH 43017
Registration:

CONFIDENTIAL
THIS DRAWING AND ASSOCIATED DESIGN ELEMENTS ARE CONFIDENTIAL AND THE PROPERTY OF SALAS O'BRIEN, WHICH RETAINS ALL COMMON LAW, COPYRIGHT, STATUTORY AND OTHER RIGHTS THERETO. ANY REPRODUCTION OR USE WITHOUT PERMISSION IS PROHIBITED, UNLESS OTHERWISE AGREED TO BY SALAS O'BRIEN, THIS DRAWING (AS WELL AS ANY COPIES) SHALL BE RETURNED TO SALAS O'BRIEN UPON REQUEST.

PROFESSIONAL SEAL

COLORADO LICENSED MICHAEL P THOMPSON 52150 PROFESSIONAL ENGINEER
8/14/2023

ISSUE DATE	DESCRIPTION
08/01/2023	100% CD

2023-00034-00
HEALTHTRUST FACILITIGROUP

TMCA CATH LAB HVAC DEHUMIDIFICATION

1501 S. POTOMAC ST,
AURORA, CO 80012

REVISIONS

Δ	DESCRIPTION	DATE
0	ISSUED FOR CONSTRUCTION	08/01/23

CHECKED BY	DRAWN BY
TJS	CAH

SHEET NAME

ELECTRICAL PARTIAL FIRST FLOOR POWER PLAN

SHEET NUMBER	REVISION
E-005	0

Autodesk Docs://080-2023-0034 TMCA Cathlab Dehumidification Upgrades/2023-0034 TMCA Cathlab-Mech_R22_R2.rvt
8/1/2023 11:44:42 AM

RSN 1743619 Permit #2023 2378137-LT

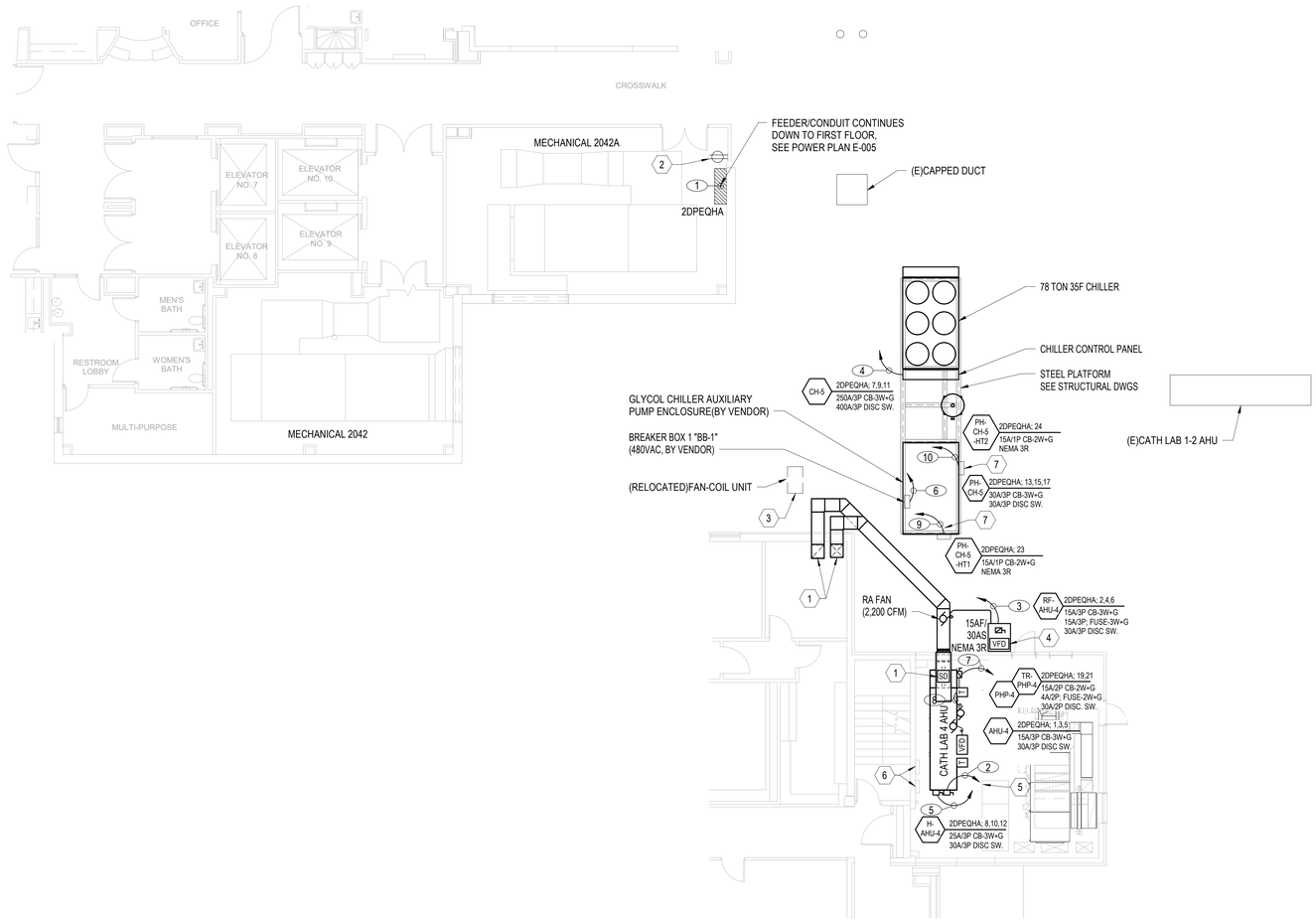

N

ELECTRICAL PARTIAL SECOND FLOOR POWER PLAN

SCALE: 1/8" = 1'-0"

GENERAL NOTES:

1. ALL ELECTRICAL WORK SHALL BE COMPLETED DURING WEEK NIGHT OR WEEKEND HOURS TO LIMIT THE AMOUNT OF DISRUPTION OF PERSONNEL TRAFFIC THROUGH MAIN LOBBY AND ADJACENT CORRIDORS.

2. CONTRACTOR SHALL ENSURE THAT WORK ABOVE FIRST FLOOR CEILING BE CONDUCTED IN INCREMENTS OF 12'-0" OR LESS AS TO LIMIT THE AMOUNT OF EXPOSED CEILING THROUGH MAIN LOBBY AND WITHIN CORRIDORS.

3. SEE DRAWING E-003 FOR FEEDER SCHEDULE FOR ALL FEEDER NUMBERS DEPICTED ON THIS DRAWING.

4. CONTRACTOR SHALL ENSURE THAT ALL ELECTRICAL EQUIPMENT IS ADEQUATELY GROUNDED AND BONDED PER ARTICLE 250 IN THE LATEST VERSION OF THE NEC.

5. CONTRACTOR SHALL GROUND ALL NEW EQUIPMENT FRAMES, SUPPORT STRUCTURES, AND ENCLOSURES OF ROOFTOP EQUIPMENT TO THE NEAREST STRUCTURAL STEEL.

6. CONTRACTOR SHALL ENSURE THAT ALL NEW GROUNDING AND BONDING IS ELECTRICALLY CONTINUOUS. PERFORM A TWO-POINT CONTINUITY TEST USING AN EARTH GROUND RESISTANCE TESTER. THE RECOMMENDED MAXIMUM VALUE FOR RESISTANCE BETWEEN THE CONNECTIONS TO THE EQUIPMENT FRAME OR STRUCTURAL STEEL AND THE GROUNDING ELECTRODE IS 0.1 OHMS (100 MILLIOHMS).

CODED NOTES:

(#) 1. CONTRACTOR SHALL PROVIDE DUCT MOUNTED SMOKE DETECTOR WITHIN SUPPLY AIR DUCT THAT IS COMPATIBLE WITH EXISTING FIRE ALARM SYSTEM. PROVIDE PROGRAMMABLE FIRE ALARM RELAY TO SHUT DOWN AHU UPON ACTUATION OF SMOKE DETECTOR OR FIRE DETECTION SYSTEM. CONTRACTOR SHALL PROVIDE WIRING FROM EXISTING FIRE ALARM SYSTEM TO NEW DUCT MOUNTED FIRE DAMPERS. COORDINATE INSTALLATION OF DUCT MOUNTED SMOKE DETECTOR AND FIRE DAMPERS WITH MECHANICAL CONTRACTOR. FINAL LOCATION OF SMOKE DETECTOR TO BE DETERMINED BY ELECTRICAL CONTRACTOR IN ACCORDANCE WITH NFPA 72 AND APPROVED BY OWNER OR DESIGNATED REPRESENTATIVE.

2. ELECTRICAL CONTRACTOR SHALL REMOVE, REPLACE, AND REWIRE EXISTING DUPLEX RECEPTACLE AND BRANCH CIRCUIT IN PROPOSED LOCATION FOR PANEL 2DPEQHA WITHIN MECHANICAL ROOM 2042A. PROVIDE NEW RECEPTACLE AND BRANCH CIRCUIT CABLE AND CONDUIT ADJACENT TO NEW PANEL 2DPEQHA.

3. MECHANICAL CONTRACTOR SHALL RELOCATE EXISTING DX CONDENSER COIL UNIT APPROXIMATELY 15'-0" NORTH FROM CURRENT LOCATION. ELECTRICAL CONTRACTOR SHALL DISCONNECT, EXTEND, AND RECONNECT THE EXISTING CIRCUIT TO THE UNIT UTILIZING EXISTING POWER SOURCE. REUSE AND ADD NEW RACEWAY AS REQUIRED.

4. TEMPERATURE CONTROLS CONTRACTOR SHALL PROVIDE SHIELDED CONTROL WIRING FROM RETURN AIR FAN MOTOR VFD CONTROL BOARD TO CONTROLLER WITHIN AHU-4. WIRE PER VFD AND AHU MANUFACTURERS' SPECIFICATIONS.

5. CONTRACTOR SHALL NOT INSTALL EQUIPMENT CLOSER THAN 40 INCHES CLEAR OF EXISTING NETWORK RACK.

6. CONTRACTOR SHALL RELOCATE EXISTING LIGHTING PANEL "LP-8" AND ALTRONIX CONTROL PANEL TO EAST WALL ADJACENT TO EXISTING DOOR. CONTRACTOR SHALL REWIRE AND PROVIDE CABLE AND CONDUIT AS REQUIRED.

7. ELECTRICAL CONTRACTOR SHALL PROVIDE A NEW HEAT TRACE SYSTEM FOR FREEZE PROTECTION ON THE CHILLER PUMP HOUSE CHILLED WATER SUPPLY, CHILLED WATER RETURN, AND SANITARY DRAIN PIPING. PROVIDE NVENT RAYCHEM PIPE HEAT TRACE SYSTEM, OR APPROVED EQUAL. ELECTRICAL CONTRACTOR SHALL PROVIDE ALL SELF-REGULATED HEATING CABLE, CONTROLLERS, TEMPERATURE SENSING RTDS, POWER CABLE, CABLE STRAPS, POWER KITS, SPLICE KITS, TEE KITS, AND END SEAL KITS AS REQUIRED FOR A COMPLETE HEAT TRACE SYSTEM. ELECTRICAL CONTRACTOR SHALL PROVIDE NEMA 3R ENCLOSURE FOR HEAT TRACE CONTROLLER MOUNTED ON EXTERIOR OF PUMP HOUSE. POWER SHALL BE PROVIDED AT 277V, SINGLE PHASE FROM PANEL 2DPEQHA. SEE DRAWING E-004 FOR ELECTRICAL CIRCUIT INFORMATION. REFERENCE MECHANICAL INSTALLATION DRAWINGS FOR DETAILS ON PIPING AND INSULATION.

LEGEND:

FEEDER NUMBER

City of Aurora Building Division
Reviewed for Code Compliance
Approved as Noted: nmartine
Date: Sep 06, 2023
2021 INTERNATIONAL CODES & 2023 NEC

Salas O'Brien
salasobrien.com
Dublin
2751 Tuller Pkwy
Dublin, OH 43017
Registration:

CONFIDENTIAL
THIS DRAWING AND ASSOCIATED DESIGN ELEMENTS ARE CONFIDENTIAL AND THE PROPERTY OF SALAS O'BRIEN, WHICH RETAINS ALL COMMON LAW, COPYRIGHT, STATUTORY AND OTHER RIGHTS THERETO. UNAUTHORIZED USE, REPRODUCTION OR DISTRIBUTION IS PROHIBITED, UNLESS OTHERWISE AGREED TO BY SALAS O'BRIEN, THIS DRAWING (AS WELL AS ANY COPIES) SHALL BE RETURNED TO SALAS O'BRIEN UPON REQUEST.

PROFESSIONAL SEAL

COLORADO LICENSED RACHEL P THOMPSON 52150 PROFESSIONAL ENGINEER
8/14/2023

ISSUE DATE	DESCRIPTION
08/01/2023	100% CD

2023-00034-00
HEALTHTRUST FACILITIGROUP

TMCA CATH LAB HVAC DEHUMIDIFICATION

1501 S. POTOMAC ST.
AURORA, CO 80012

REVISIONS

Δ	DESCRIPTION	DATE
0	ISSUED FOR CONSTRUCTION	08/01/23

CHECKED BY	DRAWN BY
TJS	CAH

SHEET NAME

ELECTRICAL PARTIAL SECOND FLOOR POWER PLAN

SHEET NUMBER	REVISION
E-006	0

8/1/2023 11:44:43 AM Autodesk Docs://080-2023-0034 TMCA Cathlab Dehumidification Upgrades/2023-00034 TMCA Cathlab-Mech_R22_R2.rvt