RSN: 1681959
Permit # 2022-2262607-LT
Sheet 1 of 10

BUILDING CLASSIFICATIONS AND CODES

OCCUPANCY GROUP: B

USE: OFFICE

CONSTRUCTION TYPE: IIB

STORIES: 2 FLOORS

SPRINKLERED: FULLY SPRINKLED

APPLICABLE CODES: 2015 IBC, 2015 IFC, 2015 IMC, 2013 NFPA 72, 2020 NFPA 70

SYSTEM TYPE AND MONITORING

SYSTEM CLASSIFICATION: (NFPA 72, CHAPTER 26), REMOTE STATION

SYSTEM TYPE: ADDRESSABLE

WIRING CLASSIFICATION: NAC – CLASS B
SLC – CLASS B
COMMUNICATION RISER – CLASS B

NOTIFICATION TYPE: TEMPORAL PATTERN

MONITORING: THIS SYSTEM IS AND WILL CONTINUE TO BE MONITORED BY A REMOTE SUPERVISING STATION, PER NFPA 72 CHAPTER 26, SECTION 3.

SCOPE OF WORK

PROVIDE THE FOLLOWING FIRE ALARM SYSTEM MODIFICATIONS TO ACCOMMODATE THE PROPOSED CONSTRUCTION FOR THE HCA ACADEMIC RESIDENCY OFFICES PROJECT IN SUITE 200 LOCATED AT 1400 SOUTH POTOMAC STREET:

PARTS

1. PROVIDE AND INSTALL TWO (2) NEW STROBES
2. PROVIDE AND INSTALL FIVE (5) NEW HORN/STROBES

INDEX

FA–00 COVER PAGE
SCOPE OF WORK
GENERAL INFORMATION
BUILDING REQUIREMENTS AND CODES

FA–01 FIRE ALARM PLAN
LEGEND
KEY MAP
GENERAL NOTES
MOUNTING HEIGHTS

FA–02 CALCULATIONS
VOLT DROP
BOOSTER CALCULATIONS
ONE–LINE RISER DIAGRAM
WIRE CODE CHART
MATRIX – SEQUENCE OF OPS

1400 SOUTH POTOMAC STREET

FIRE ALARM SYSTEM SHOP DRAWINGS FOR:

PROJECT:
HCA ACADEMIC RESIDENCY OFFICES
1400 SOUTH POTOMAC STREET, SUITE 200
AURORA, CO 80012

OWNER/GC:
CODA CONSTRUCTION
444 LIPAN ST.
DENVER, CO 80204
PH:(303)757–3033
FAX:(303)757–3083
JOE HANSON

FIRE ALARM CONTRACTOR:
FIRE ALARM SERVICES, INC.
4800 W. 60TH AVENUE
ARVADA, CO 80003
PH:(303)466–8800
FAX:(303)466–8820
SHANNON SMITH

ARCHITECT:
DAVIS PARTNERSHIP ARCHITECT
2901 BLAKE ST.
DENVER, CO 80205
PH:(303)861–8555

FIRE ALARM DESIGNER:
FIRE ALARM SERVICES, INC.
4800 W. 60TH AVENUE
ARVADA, CO 80003
PH:(303)466–8800
FAX:(303)466–8820
BRITAINY COWDEN
BRITAINYC@FIREALARMSERVICES.COM

Fire Alarm SERVICES, INC.

Fire Alarm Services, Inc.
4800 W. 60th Avenue
Arvada, CO 80003

(303)466–8800 (Phone)
(303)466–8820 (Fax)
contactus@fasonline.cc (E–Mail)
www.fasonline.cc

City of Aurora Building Division
Project: *HCA Offices Fire Alarm*
Address: *1400 S Potomac St. Suite 200*
Occupancy Group: *IBC B*
Construction Type: *IBC Type II-B SPK*
RSN: *1681959*
Permit: *2023 2262607 LT*

City of Aurora Building Division
Reviewed for Code Compliance
Approved as Noted: *Rich Tenorio*
Date: *January 5, 2023*
2015 INTERNATIONAL CODES & 2020 NEC

Code violations that are found during inspection are required to be corrected. Permit issuance does not grant the approval of a code violation.

Provide a full size set of legible approved construction documents **PRINTED IN COLOR** for review by the Field Inspector.

COA Adopted Codes for this project:
ICC-2015 - NEC-2020
NFPA 13-2013 - NFPA 72-2013
COA Amendments 22 & 66

Raymond P. Breeland
Certification Expires 04/01/25
Fire Alarm Systems Level III
NICET Certification #111006
Date: 11/29/2022

Fire Alarm SERVICES, INC.
4800 W. 60TH AVENUE
ARVADA, CO 80003
phone: 303–466–8800
fax: 303–466–8820
www.fasonline.cc email: contactus@fasonline.cc

REVISIONS
NO. 1 DATE 12/30/22 — REV 1 – MATRIX

DRAWN BY: B. COWDEN
DATE: 11/22/22
APPR. BY:
DATE:

PROJECT TITLE: FIRE ALARM SYSTEM TENANT FINISH FOR: HCA ACADEMIC RESIDENCY OFFICES
BUILDING NAME & ADDRESS: 1400 SOUTH POTOMAC STREET, 1400 SOUTH POTOMAC STREET AURORA, CO 80012
PROJECT NUMBER: 2214321

FIRE ALARM & DETECTION SYSTEM
DRAWING TITLE: SUITE 200 COVER PAGE
SCALE: N/A

PROJECT SHEET TITLE
FA–00

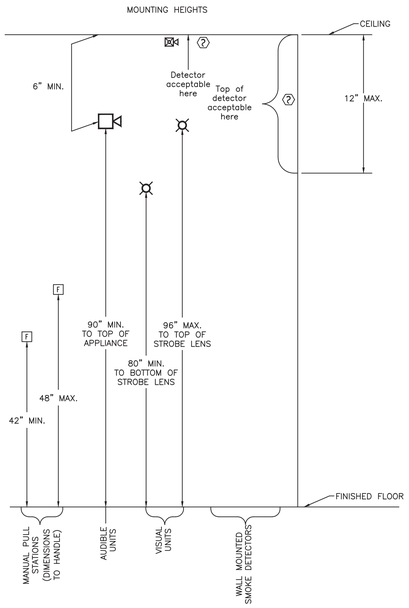

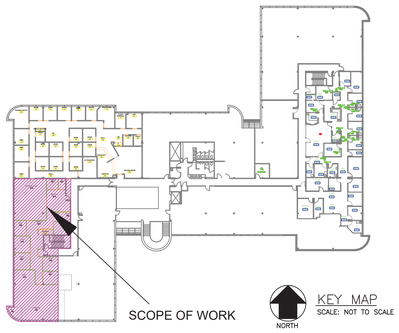

FIRE ALARM SYMBOLS LEGEND

EXISTING	DESCRIPTION	PROPOSED
	STROBE – Wall Mount or CM = Ceiling Mount	
	SMOKE DETECTOR – x = photo, ion	
	Horn/strobe – Wall Mount or Ceiling Mount	
H	Horn only = Wall Mount or CM = Ceiling Mount	H
EOL	END OF LINE RESISTOR	EOL
NAC-N	BOOSTER PANEL	NACN
F	PULL STATION	F
	HEAT DETECTOR – x =135, 200, ROR	
WF	FLOW SWITCH	WF
TS	TAMPER SWITCH	TS
	DUCT DETECTOR – x = photo, ion	
RM	RELAY MODULE	RM
MM	MONITOR MODULE	MM

NOTIFICATION APPLIANCE CIRCUIT NUMBER
NOTIFICATION APPLIANCE PANEL NUMBER
DEVICE NUMBER
NAC1-2-3

POWER EXPANDER NUMBERING

	SPEAKER LINE "A"	SPEAKER LINE "B"	

RL = RELOCATED DEVICES
RR = REMOVE AND REINSTALL
RPL = REMOVE AND REPLACE
J = J-BOX

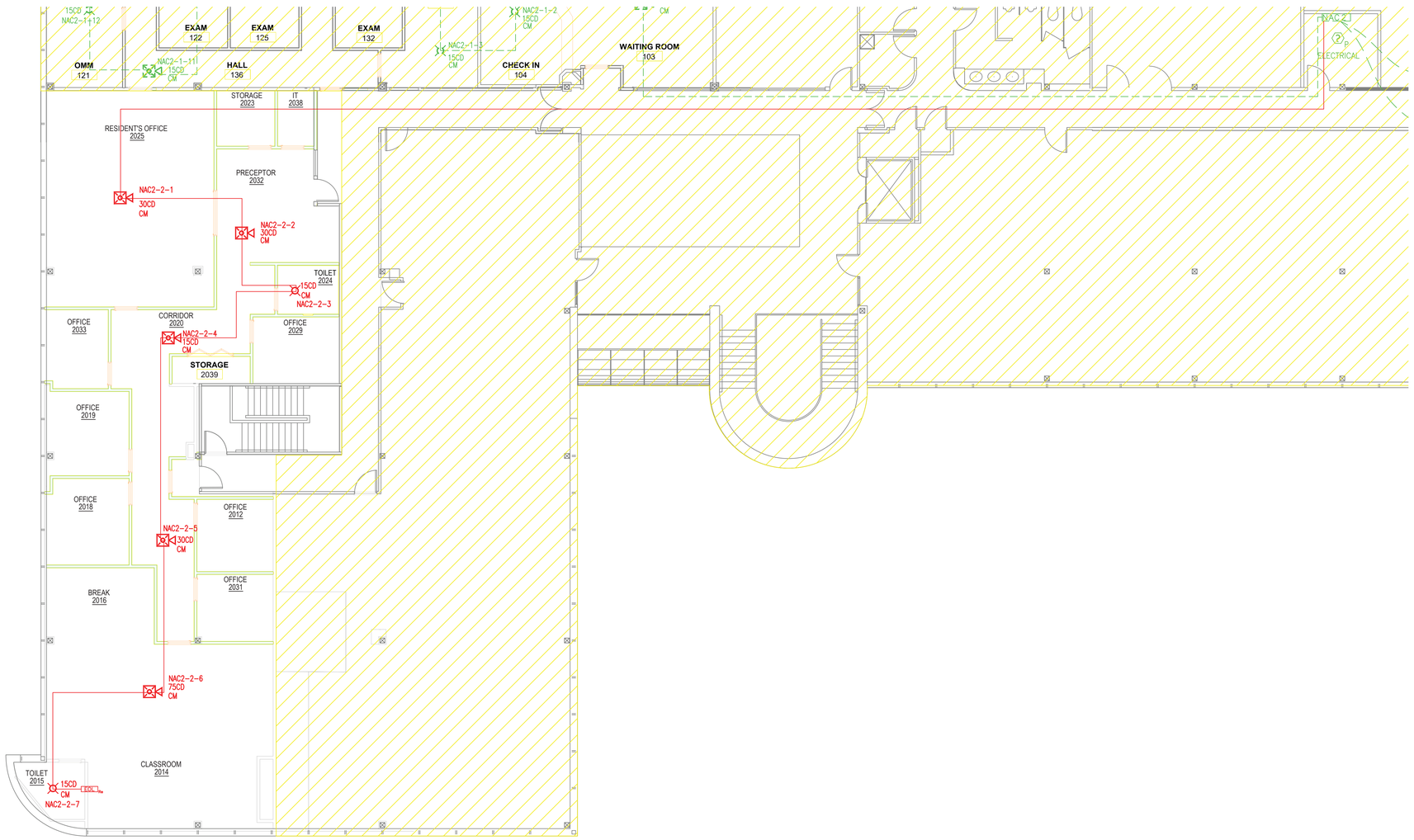

SUITE 200 FIRE ALARM PLAN

SCALE: 1/8" = 1'-0"

NORTH 0 5 10 15 30 FEET

Fire Alarm SERVICES, INC.
4800 W. 60TH AVENUE
ARVADA, CO 80003
phone: 303-466-8800
fax: 303-466-8820
www.fasonline.cc email: contactus@fasonline.cc

REVISIONS

NO.	DATE	
1	12/30/22	REV 1 – MATRIX

DRAWN BY: B. COWDEN
DATE: 11/22/22
APPR. BY:
DATE:

PROJECT TITLE: FIRE ALARM SYSTEM TENANT FINISH FOR: HCA ACADEMIC RESIDENCY OFFICES
BUILDING NAME & ADDRESS: 1400 SOUTH POTOMAC STREET, 1400 SOUTH POTOMAC STREET, AURORA, CO 80012
PROJECT NUMBER: 2214321

FIRE ALARM & DETECTION SYSTEM
DRAWING TITLE: SUITE 200 FIRE ALARM PLAN
SCALE: AS SHOWN

Raymond P. Breeland
Certification Expires 04/01/25
Fire Alarm Systems Level III
NICET Certification #111006
Date: 11/29/2022

PROJECT SHEET TITLE
FA–01

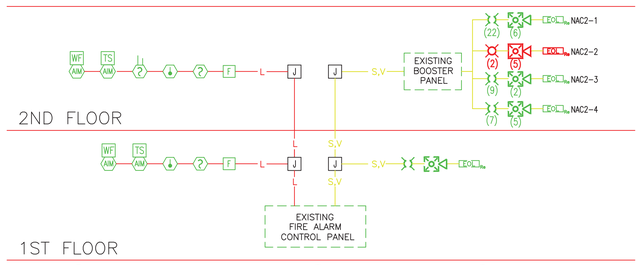

ONE-LINE RISER DIAGRAM

FIRE ALARM WIRE CODE CHART						
Code	Description	Wire Type	Wire Tag	Jacket Color	Color (+)	Color (–)
AC	120VAC Power Wiring	3#12 AWG Solid (w/ Green Ground)	–	–	Black (hot)	White (neu)
A	Annunciator Wiring	#18 AWG Twisted/Shielded Pair	–	–	Red	Black
D	Door Holder Wiring	2#14 AWG Solid	Door Holder	Red	Red	Black
L	SLC Wiring (Signaling Line Circuit)	2#18 AWG Solid Shielded Pair	SLC	Red	Red	Black
P	24VDC Power Wiring	2#16 AWG Solid	24 VDC	Red	Red	Black
R	Remote Light/Test Wiring	2#18 AWG Solid	R	Red	Red	Black
S	Notification Appliance (Horns) Wiring	2 or 4#14 AWG Solid	–	Yellow	Red	Black
SA	Notification Appliance (A Speaker) Wiring	2#16 AWG Twisted/Shielded Pair	–	Gray	Red	Black
SB	Notification Appliance (B Speaker) Wiring	2#16 AWG Twisted/Shielded Pair	–	Blue	Red	Black
T	Telephone Circuit Wiring	2#16 AWG Twisted/Shielded Pair	Circuit #	Red	Red	Black
V	Notification Appliance (Strobe) Wiring	2 or 4#14 AWG Solid	–	Yellow	Red	Black
Z	IDC Wiring (Initiating Device Circuit)	2#18 AWG Solid	Zone #	Red	Red	Black
Wire Type Class & Style		SLC – Class B		NAC – Class B		

1400 S. POTOMAC BUILDING SEQUENCE OF OPERATIONS

SYSTEM OUTPUTS

		FACP Annunciation							Notification				Fire Safety Ctrl.						Monitoring			
		Actuate Common Alarm Signal Indicator	Actuate Audible Alarm Signal	Actuate Common Supervisory Signal Indicator	Actuate Audible Supervisory Signal	Actuate Common Trouble Signal Indicator	Actuate Audible Common Trouble Signal	Display Change of Status	Actuate 1st Floor Evacuation Signals (Horn/Strobes)	Actuate 2nd Floor Evacuation Signals (Horn/Strobes)	Actuate Exterior Horn/Strobe	Silence Audible Signal (Horns)	Release Magnetically Held Smoke Doors	Recall Elevator(s) to 1st Floor - Primary Recall	Recall Elevator(s) to 2nd Floor - Alternate Recall	Shut Down Air Handling Units	Activate Hat-Light	Activate Shunt-Trip	Transmit Fire Alarm Signal to Supervising Station	Transmit Trouble Signal to Supervising Station	Transmit Supervisory Signal to Supervising Station	Transmit Waterflow Signal to Supervising Station	
		A	B	C	D	E	F	G	H	I	J	K	L	M	N	O	P	Q	R	S	T	U	
1	Manual Pull Station - 1st Floor	X	X					X	X	X	X		X						X				1
2	Manual Pull Station - 2nd Floor	X	X					X	X	X	X		X						X				2
3	Smoke Sensor - 1st Floor Elev Lobby	X	X					X	X	X	X		X		X				X				3
4	Smoke Sensor - 2nd Floor Elev Lobby	X	X					X	X	X	X		X	X					X				4
5	Smoke Sensor - 1st Floor Elev Pit	X	X					X	X	X	X		X	X			X		X				5
6	Smoke Sensor - 1st Floor Elev Machine Room	X	X					X	X	X	X		X	X			X		X				6
7	Smoke Sensor - All Other Locations	X	X					X	X	X	X		X						X				7
8	Heat Sensors - 1st Floor	X	X					X	X	X	X		X						X				8
9	Heat Sensors - 1st Floor Elev. Pit	X	X					X	X	X	X		X					X	X				9
10	Heat Sensors - 1st Floor Elev Machine Room	X	X					X	X	X	X		X						X				10
11	Duct Detector - 2nd Floor			X	X			X				1				X					X		11
12	Sprinkler Waterflow - 1st Floor	X	X					X	X	X	X		X						X			X	12
13	Sprinkler Waterflow - 2nd Floor	X	X					X	X	X	X		X						X			X	13
14	Sprinkler Control Valve			X	X			X													X		14
15	FACP AC Power Failure					X	X	X					X							X			15
16	FACP Low Battery					X	X	X												X			16
17	Open Circuit					X	X	X												X			17
18	Ground Fault					X	X	X												X			18
19	Notification Appliance Circuit Short					X	X	X												X			19
20	Alarm Signal Silence											X											20
		A	B	C	D	E	F	G	H	I	J	K	L	M	N	O	P	Q	R	S	T	U	

SYSTEM INPUTS

INCREMENTAL VOLTAGE DROP CALCULATIONS FOR AUDIBLE/ VISUAL CIRCUITS
MINIMUM UL RATED VOLTAGE: 16 VOLTS
Current shown in calculations is RMS current at 16 volts.

Resistance:	12 Guage	2.01
	14 Guage	3.19
	16 Guage	5.08

Circut Number: NAC2-2
Location: Floor 2 Booster Panel — **Input Voltage =** **19.7**

Notification Circuit	Current (in Amps)	Wire Distance (in Feet)	Total Distance (in feet)	Wire Size (AWG)	Resistance (Ohms)	Voltage Drop	From Baseline Voltage
CM Horn Strobe 30CD	0.0500	187	187	14	1.1931	0.3830	19.3170
CM Horn Strobe 30CD	0.0500	31	218	14	0.1978	0.0536	19.2634
CM Strobe 15CD	0.0350	25	243	14	0.1595	0.0352	19.2282
CM Horn Strobe 15CD	0.0500	33	276	14	0.2105	0.0392	19.1890
CM Horn Strobe 30CD	0.0500	38	314	14	0.2424	0.0330	19.1560
CM Horn Strobe 75CD	0.0500	32	346	14	0.2042	0.0176	19.1385
CM Strobe 15CD	0.0350	36	382	14	0.2297	0.0083	19.1302
End of Line Resistor	0.0010	0	382	14	0.0000	0.0000	19.1302
Totals:	**0.321**	**382**			**2.4372**	**0.5698**	**19.1302**
Total Devices:	7						

BOOSTER CALCULATIONS

FOR: 1400 S. POTOMAC ST.
AURORA, CO 80012

HOURS OF SUPERVISION: 24 HOURS
MINUTES OF ALARM: 5 MINUTES

PANEL: EST BPS-6

ITEM	QTY	PART NUMBER	DESCRIPTION	Device Supervisory Current	Device Alarm Current	Total Supervisory Current	Total Alarm Current
1	1	EXISTING	Notification Booster Panel	0.070000	0.190000	0.070000	0.190000
			TOTAL:			**0.070000**	**0.190000**

PERIPHERAL:

ITEM	QTY	PART NUMBER	DESCRIPTION	Device Supervisory Current	Device Alarm Current	Total Supervisory Current	Total Alarm Current
1	16	EXISTING	15cd Strobe (OLD)	0.000000	0.103000	0.000000	1.648000
2	4	EXISTING	15cd Horn/Strobe (OLD)	0.000000	0.129000	0.000000	0.516000
3	1	EXISTING	30cd Horn/Strobe (OLD)	0.000000	0.167000	0.000000	0.167000
4	1	EXISTING	75cd Horn/Strobe (OLD)	0.000000	0.281000	0.000000	0.281000
5	1	EXISTING	75cd Ceiling Mt. Horn/Strobe (OLD)	0.000000	0.316000	0.000000	0.316000
6	13	G4VRF	15cd Strobe (NEWER)	0.000000	0.028000	0.000000	0.364000
7	9	GCVRF	15cd Ceiling Mt. Strobe (NEWER)	0.000000	0.035000	0.000000	0.315000
8	2	GCAVRF	15cd Ceilng Mt. Horn/Strobe (NEWER)	0.000000	0.050000	0.000000	0.100000
9	3	GCAVRF	30cd Ceiling Mt. Horn/Strobe (NEWER)	0.000000	0.050000	0.000000	0.150000
10	1	GCAVRF	75cd Ceiling Mt. Horn/Strobe (NEWER)	0.000000	0.050000	0.000000	0.050000
11	**2**	**GCVRF**	**15cd Ceiling Mt. Strobe**	**0.000000**	**0.035000**	**0.000000**	**0.070000**
12	**1**	**GCAVRF**	**15cd Ceilng Mt. Horn/Strobe**	**0.000000**	**0.050000**	**0.000000**	**0.050000**
13	**3**	**GCAVRF**	**30cd Ceiling Mt. Horn/Strobe**	**0.000000**	**0.050000**	**0.000000**	**0.150000**
14	**1**	**GCAVRF**	**75cd Ceiling Mt. Horn/Strobe**	**0.000000**	**0.050000**	**0.000000**	**0.050000**
			TOTAL:			**0.000000**	**4.227000**

SUPERVISORY:
PANEL: 0.070000 AMPS
PERIPHERAL 0.000000 AMPS
SUB-TOTAL: 0.070000 AMPS
X HOURS OF SUPERVISORY: 24.0000 HOURS
SUB-TOTAL: 1.680000 AMP HOURS

ALARM:
PANEL: 0.190000 AMPS
PERIPHERAL: 4.227000 AMPS
SUB-TOTAL: 4.417000 AMPS
X MINUTES OF ALARM: 0.08333 HOURS
SUB-TOTAL: 0.368083 AMP HOURS

TOTALS:
TOTAL SUPERVISORY: 1.680000 AMP HOURS
TOTAL ALARM: 0.368083 AMP HOURS
TOTAL: 2.048083 AMP HOURS
TOTAL PLUS SAFETY FACTOR(20%) 2.45770 AMP HOURS
Batteries Supplied - 1 Set of: 7.00000 AMP HOURS

City of Aurora Building Division
Reviewed for Code Compliance
Approved as Noted: *Rich Tenorio*
Date: *January 5, 2023*
2015 INTERNATIONAL CODES & 2020 NEC

Raymond P. Breeland
Certification Expires 04/01/25
Fire Alarm Systems Level III
NICET Certification #111006
Date: 11/29/2022

Fire Alarm SERVICES, INC.
4800 W. 60TH AVENUE
ARVADA, CO 80003
phone: 303-466-8800
fax: 303-466-8820
www.fasonline.cc email: contactus@fasonline.cc

REVISIONS
REV 1 – MATRIX
NO. 1 DATE 12/30/22

DRAWN BY: B. COWDEN
DATE: 11/22/22
APPR. BY:
DATE:

PROJECT TITLE: FIRE ALARM SYSTEM TENANT FINISH FOR: HCA ACADEMIC RESIDENCY OFFICES
BUILDING NAME & ADDRESS: 1400 SOUTH POTOMAC STREET 1400 SOUTH POTOMAC STREET AURORA, CO 80012
PROJECT NUMBER: 2214321

FIRE ALARM & DETECTION SYSTEM
DRAWING TITLE: SUITE 200 CALCULATIONS
SCALE: N/A

PROJECT SHEET TITLE
FA–02

PYE • BARKER
FIRE & SAFETY
Since 1946

Fire Alarm Services, Inc.
4800 W. 60th Avenue
Arvada, CO 80003

Phone (303) 466-8800
Fax (303) 466-8820

Fire Alarm System Addition at:

HCA Academic Residency Office
1400 South Potomac Street
Aurora, CO 80012

Scope of Work:

Provide the following fire alarm system modifications to accommodate the proposed construction for the HCA Academic Residency Offices in suite 200 located at 1400 South Potomac Street:

1. PROVIDE AND INSTALL TWO (2) NEW STROBES
2. PROVIDE AND INSTALL FIVE (5) NEW HORN/STROBES

Raymond P. Breeland
Certification Expires 04/01/25
Fire Alarm Systems Level III
NICET Certification #111006

Date 11/29/2022

City of Aurora Building Division
Reviewed for Code Compliance
Approved as Noted: *Rich Tenorio*
Date: *January 5, 2023*
2015 INTERNATIONAL CODES & 2020 NEC

RSN: 1681959
Permit # 2022-2262607-LT
Sheet 5 of 10

EDWARDS
United Technologies

LIFE SAFETY & INCIDENT MANAGEMENT

Genesis LED GC Series

Ceiling Mount Notification Devices

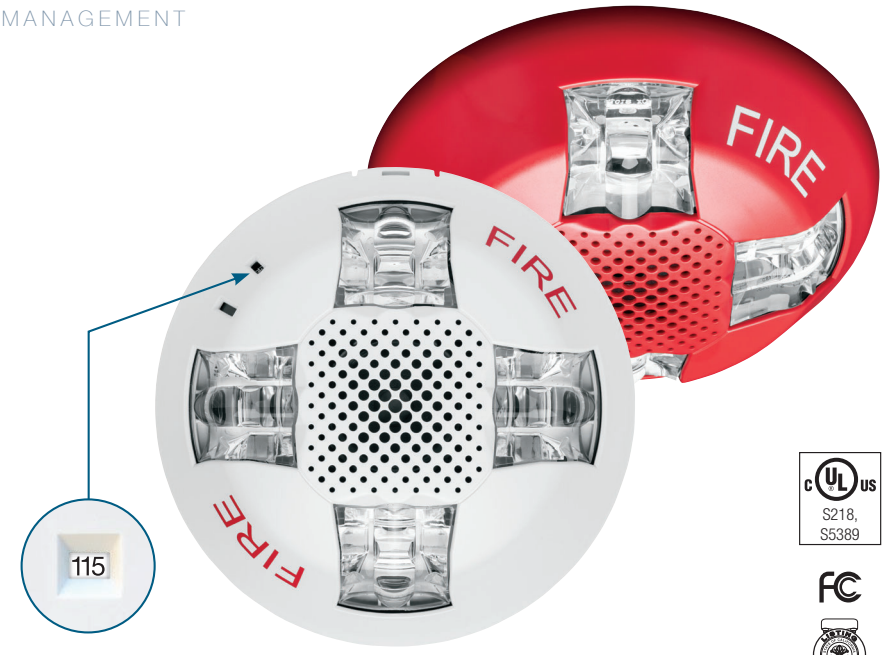

c UL us
S218, S5389

FC

Overview

Genesis LED GC Series horns and LED strobes feature a sleek low profile design and energy-efficient technology that makes them less expensive to install and operate by reducing overhead. High performance LEDs require fewer power supplies, backup power, and batteries. These new appliances are designed with, energy-efficiency, and life safety in mind.

Genesis LED GC Series uses high efficiency optics, combined with patented electronics, to deliver a highly controlled and efficiently focused light distribution pattern in exchange for lower current requirements. Strobes feature field-selectable 15, 30,75, or 115 cd light output.

Compared with Xenon-type strobes, Genesis LED GC Series appliances need fewer power supplies and often smaller wire gauge, which lightens conduit requirements. They are also backwards compatible with legacy strobes, so there's no need to replace all your existing devices to upgrade to new LED technology. In fact, GC strobes can be mixed on the same circuit and used in the same field of view as Xenon-based strobes. This makes Genesis LED GC Series ideal for new installations and retrofits alike.

Field-configurable sound output levels provide the flexibility modern life safety projects demand, while the Genesis LED control protocol keeps multiple strobes on compatible NAC circuits synchronized to well within NFPA 72 requirements.

Serviceability is another area where GC Series appliances shine. The universal room side wiring plate allows for pre-installation and electrical wiring as well as checking continuity with the included diagnostics check bar. GC Series devices can then be easily snapped into place with the confidence of knowing the wiring is correct. The innovative under-cover diagnostic test points provide easy access to device circuit testing while mounted.

Standard Features

- **High Performance LED Strobe Technology**
  - Ultra low device current consumption allows:
    - More devices per circuit
    - Ability to use lower gauge wire
    - Longer wire runs
    - Fewer booster power supplies
  - High efficiency optics
  - Selectable 15, 30, 75, or 115 cd light output
  - LED devices may be mixed with legacy Xenon strobes
- **Efficient Audible Output**
  - Selectable high or low dB horn output
  - Selectable temporal or steady horn output
  - Improved audio frequency range for better wall penetration
- **Low-profile Design**
  - Ultra-slim... protrudes about 1.5" from the mounting surface
  - Attractive appearance... no visible mounting screws
- **Multiple "FIRE" Marking Options**
  - Order English, French, Spanish or no FIRE markings
  - Change markings at any time with replaceable quick-swap covers
- **Easy to Install**
  - Pre-install and pre-wire with convenient universal room side wiring plate
  - Check electrical continuity on room side wiring plate with included diagnostics check bar
  - Diagnostics port streamlines device circuit testing
  - Fits 1-gang, 2-gang, 4-inch octagon, and 4-inch square electrical boxes
  - Optional red and white trim plates available
  - Slide switches for field configuration
  - 12 to 18 AWG in-out screw terminals for quick wiring

RSN: 1681959
Permit # 2022-2262607-LT
Sheet 6 of 10

Application

Strobes

Genesis GC Series strobes are UL 1971-listed for use indoors as ceiling-mounted public-mode notification appliances for the hearing impaired. Prevailing codes require strobes to be used where ambient noise conditions exceed 105 dBA (87 dBA in Canada), where occupants use hearing protection, and in areas of public accommodation as defined in the *Americans with Disabilities Act*.

Synchronization is important in order to avoid triggering seizures in people with photosensitive epilepsy. All Genesis strobes exceed UL synchronization requirements (within 10 milliseconds over a two-hour period) when used with a synchronization source. See the specifications table for a list of compatible sources.

Horns

Genesis horn output reaches as high as 92 dBA and features an improved audio frequency range compared with other Genesis horns. This results in excellent sound penetration through walls and a clear warning of danger. Horn only models may be configured for either coded or non-coded notification appliance circuits. They can also be set for high or low dBA output. This setting reduces horn output by about 6 dBA.

The suggested sound pressure level for each signaling zone used with alarm signals is at least 15 dBA above the average ambient sound level, or 5 dBA above the maximum sound level having a duration of at least 60 seconds, whichever is greater. These values are measured at five feet (1.5 m) above the floor. The average ambient sound level is A-weighted, fast response sound pressure measured over a 24-hour period.

Doubling the distance from the signal to the ear will theoretically result in a 6 dBA reduction of the received sound pressure level. The actual effect depends on the acoustic environment in the space. A 3 dBA difference represents a barely noticeable change in volume.

Installation

Genesis GC horns and strobes mount to the required GP10 room side wiring plate. The GP10 mounting plate is ordered separately from the GC device in packs of 10 for convenient pre-installing and pre-wiring. The device can be removed easily from the room side wiring plate by pushing up with a screwdriver. The cover can also be removed from the device easily with a screwdriver to access the light and sound output settings and a diagnostics test port for voltage testing.

Removing Cover

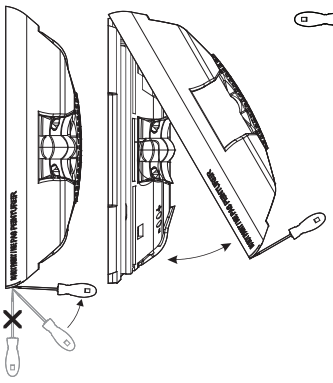

Removing Device

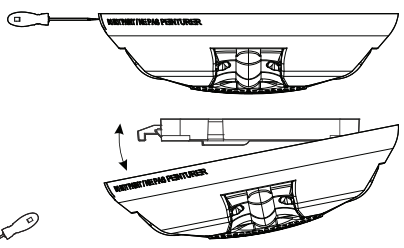

Genesis LED GC Series horns, strobes, and horn-strobes mount to any standard one-gang, two-gang, 4-inch octagon, and 4-inch square electrical box. Matching optional GCT trim rings are available to cover oversized openings. Optional color matched double-gang surface boxes are also available. Genesis LED GC series are listed to be both wall mounted or ceiling mounted.

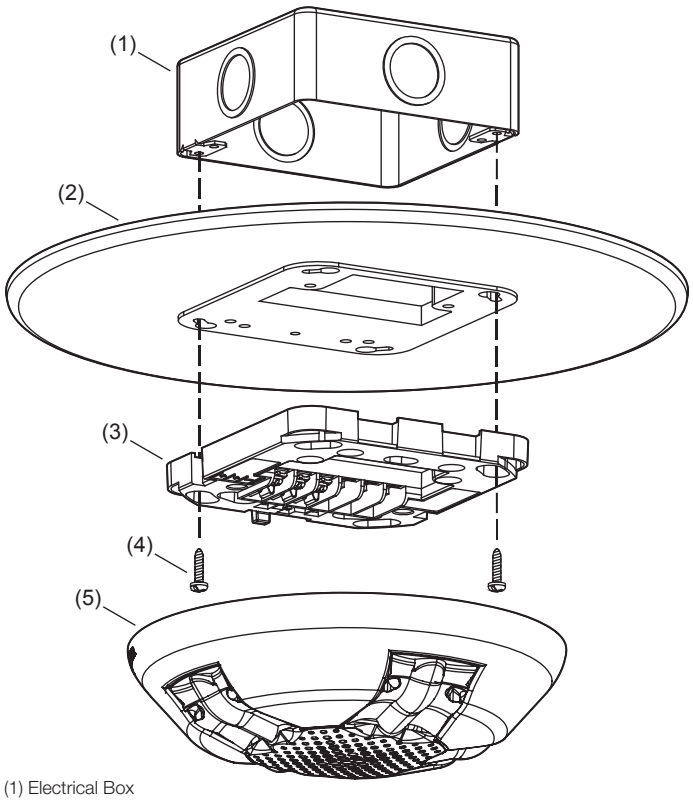

(1) Electrical Box
(2) Trim Plate (optional)
(3) Wiring plate (required, ordered separately)
(4) Machine screw (2X, supplied with wiring plate)
(5) GC signaling appliance

Wiring

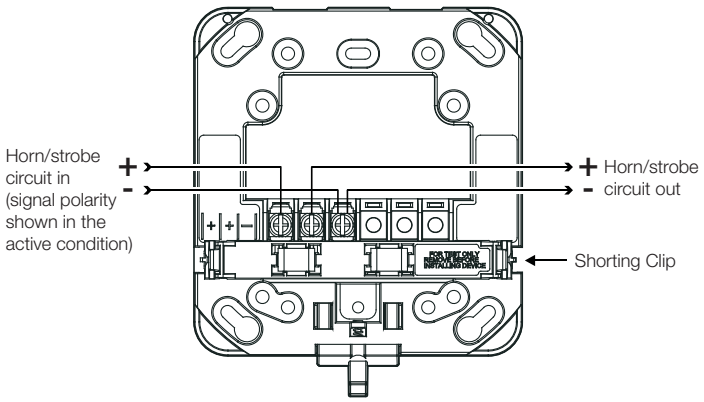

RSN: 1681959
Permit # 2022-2262607-LT
Sheet 7 of 10

Dimensions

GC Notification Appliances

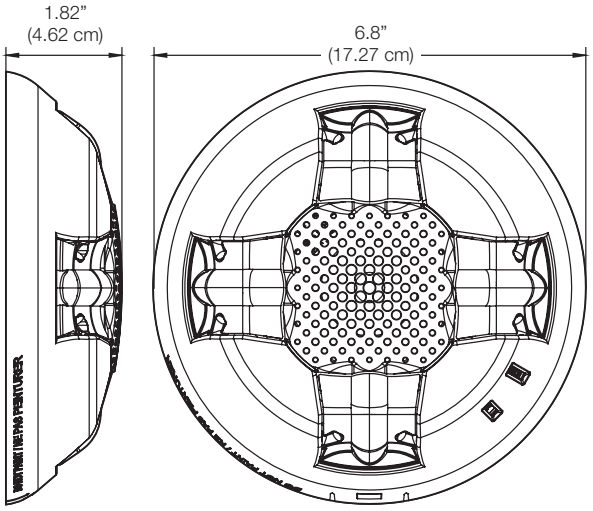

GCT Trim Plate (optional)

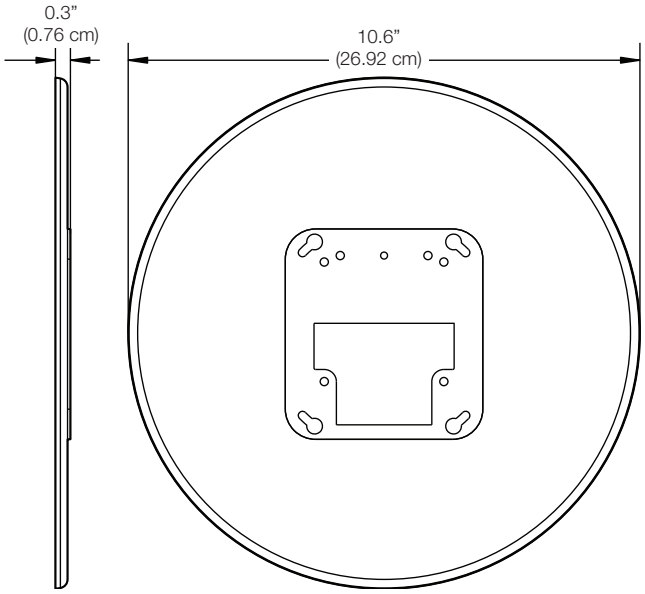

Diagnostics

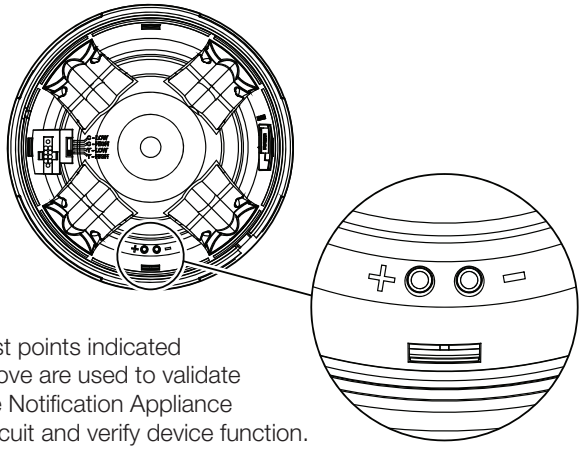

Test points indicated above are used to validate the Notification Appliance Circuit and verify device function.

Field Configuration

Temporal horn and horn-strobe models are factory set to sound in a three-pulse temporal pattern. By sliding the tone selector switch, horn only models may be configured for constant horn output that can be coded at precise intervals by EDWARDS control panels and control modules.

Note: Temporal 3 coding is the required output for fire notification devices per NFPA 72. Any device coding other than temporal 3 is at the discretion and approval of the local authority having jurisdiction (AHJ).

Horns and horn-strobes are factory set for high dB output. Low dB output may be selected by sliding the tone selector switch. This reduces the output by about 6 dBA.

Genesis LED clear strobes and horn-strobes may be set for 15, 30, 75, or 115 candela output. The output setting is changed by simply removing the cover and sliding the candela switch to the desired setting. The device does not have to be removed from the wall to change the output setting. The setting remains visible through a small window on the device after the cover is closed.

Light and Sound Output Settings

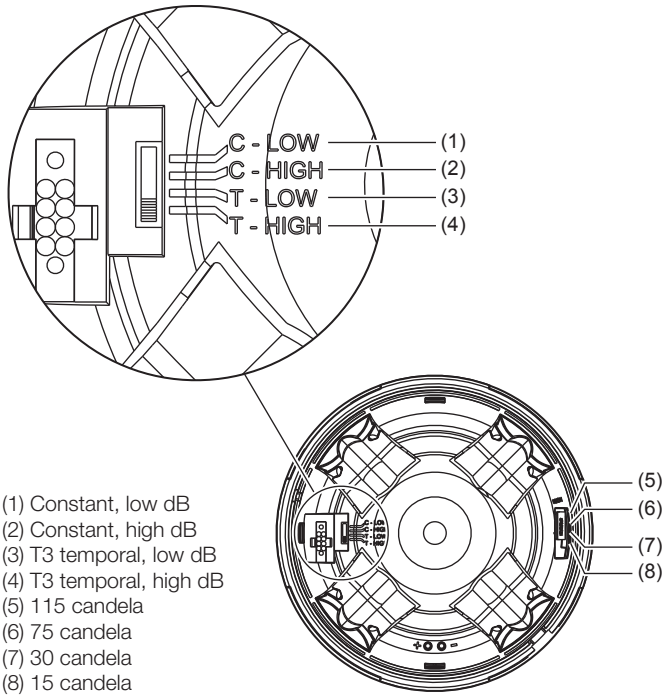

(1) Constant, low dB
(2) Constant, high dB
(3) T3 temporal, low dB
(4) T3 temporal, high dB
(5) 115 candela
(6) 75 candela
(7) 30 candela
(8) 15 candela

Operating current

Horns

Sound setting	16 to 33 VDC	16 to 33 VFWR
C-Low, T-Low	20 mA	25 mA
C-High, T-High	30 mA	40 mA

Strobes

Strobe setting	16 to 33 VDC	16 to 33 VFWR
15, 30, 75, 115	35 mA	45 mA

Horn-Strobes

Strobe setting	Sound setting	16 to 33 VDC	16 to 33 VFWR
15, 30, 75, 115	C-Low, T-Low	50 mA	60 mA
	C-High, T-High	60 mA	75 mA

RSN: 1681959
Permit # 2022-2262607-LT
Sheet 8 of 10

Sound Output

Horn & Horn-Strobe

Sound setting	Reverberant (UL464)	Anechoic (CAN/ULC - 5925)
C-Low, T-Low	80 dBA	86 dBA
C-High, T-High	86 dBA	92 dBA

Sound pattern – Horn Models (ULC)

Axis	Angle (°)	Output (dBA)
Horizontal	115 and 55	93.3
Vertical	125 and 50	91.7

Sound pattern – Horn-Strobe Models (ULC)

Axis	Angle (°)	Output (dBA)
Horizontal	145 and 35	93.0
	155 and 35	90.8
Vertical	135 and 35	92.0
	155 and 25	85.4

Light Distribution

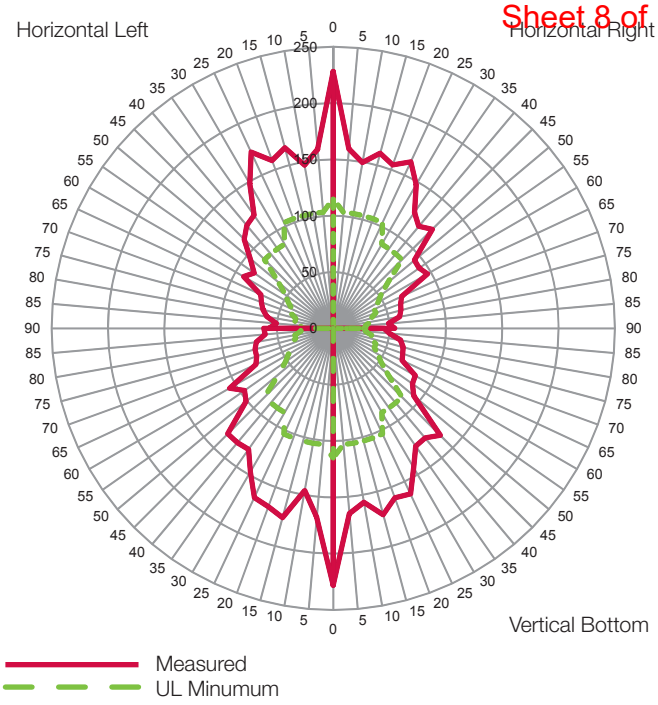

Specifications

Operating voltage	16 to 33 VDC, 16 to 33 VFWR
Horn signal type	Constant or TC3 temporal
Light output	15, 30, 75, or 115 candela
Strobe flash rate	1 fps (flash per second) approx.
Synchronization	20 Ω max. between any two devices. To determine allowed wire resistance, refer to these specifications, and the specifications for the synchronized signal source.
Synchronization Sources	Edwards CC Series Signal Modules, Booster and Auxiliary Power Supplies, Intelligent and Conventional Control Panels
Wire size	12 to 18 AWG (0.75 to 2.50 mm^2)
Mounting	Wall or Ceiling mount
Dimensions (Ø × D)	6.8 × 1.82 in. (17.27 × 4.62 cm)
Strobe-to-box center offset	-1.70 inches (-4.32 cm)
Compatible electrical boxes [1]	1-gang, 2-gang, 4-inch octagon, 4-inch square
Trim plates	GCTR, GCTW 10.6 × 0.3 in. (26.92 × 0.76 cm)
Operating environment	
Temperature	32 to 122°F (0 to 50°C)
Relative humidity	0 to 93% noncondensing
Storage Temperature	-40 to 158 F (-40 to 70 C)

[1] Electrical boxes must be at least 1-1/2 in. (3.81 cm) deep.

RSN: 1681959
Permit # 2022-2262607-LT
Sheet 9 of 10

Ordering Information

Notification Appliances		Color	Marking
 Horns	GCARF	Red	FIRE
	GCARF-FR	Red	FEU
	GCARF-SP	Red	FUEGO
	GCARN	Red	None
	GCAWF	White	FIRE
	GCAWF-FR	White	FEU
	GCAWF-SP	White	FUEGO
	GCAWN	White	None
 Strobes	GCVRF	Red	FIRE
	GCVRF-FR	Red	FEU
	GCVRF-SP	Red	FUEGO
	GCVRN	Red	None
	GCVWF	White	FIRE
	GCVWF-FR	White	FEU
	GCVWF-SP	White	FUEGO
	GCVWN	White	None
 Horn-strobes	GCAVRF	Red	FIRE
	GCAVRF-FR	Red	FEU
	GCAVRF-SP	Red	FUEGO
	GCAVRN	Red	None
	GCAVWF	White	FIRE
	GCAVWF-FR	White	FEU
	GCAVWF-SP	White	FUEGO
	GCAVWN	White	None

Replacement Appliance Covers		Color	Marking
 Horn Covers	GCARA-CVR	Red	ALERT
	GCARF-CVR	Red	FIRE
	GCARF-FR-CVR	Red	FEU
	GCARF-SP-CVR	Red	FUEGO
	GCARN-CVR	Red	None
	GCAWA-CVR	White	ALERT
	GCAWF-CVR	White	FIRE
	GCAWF-FR-CVR	White	FEU
	GCAWF-SP-CVR	White	FUEGO
	GCAWN-CVR	White	None
 Strobe Covers	GCVRA-CVR	Red	ALERT
	GCVRF-CVR	Red	FIRE
	GCVRF-FR-CVR	Red	FEU
	GCVRF-SP-CVR	Red	FUEGO
	GCVRN-CVR	Red	None
	GCVWA-CVR	White	ALERT
	GCVWF-CVR	White	FIRE
	GCVWF-FR-CVR	White	FEU
	GCVWF-SP-CVR	White	FUEGO
	GCVWN-CVR	White	None
 Horn-strobe Covers	GCAVRA-CVR	Red	ALERT
	GCAVRF-CVR	Red	FIRE
	GCAVRF-FR-CVR	Red	FEU
	GCAVRF-SP-CVR	Red	FUEGO
	GCAVRN-CVR	Red	None
	GCAVWA-CVR	White	ALERT
	GCAVWF-CVR	White	FIRE
	GCAVWF-FR-CVR	White	FEU
	GCAVWF-SP-CVR	White	FUEGO
	GCAVWN-CVR	White	None

Accessories

 GP10	Room Side Wiring Plate (required, ordered separately)	 GCTR	Trim plate, GC Series, red	 GCTW	Trim plate, GC Series, white
		27193-21	Two-gang surface mount box, red	27193-26	Two-gang surface mount box, white

Model Number Syntax, Appliances

Genesis Series
GC = Ceiling mount appliances

Housing Color
R = Red
W = White

GCAVRF

Housing Marking
N = None
F-FR = FEU
F-SP = FUEGO
F = FIRE
A = ALERT*

Functions
A = Horn only
V = Strobe only
AV = Horn-Strobe

* ALERT Marking available on white strobe model only. See replacement covers for more options.

Model Number Syntax, Replacement Covers

Genesis Series
GC = Ceiling mount appliances

Housing Color
R = Red
W = White

GCAVRF-CVR

Cover Designation

Cover Marking
N = None
F-FR = FEU
F-SP = FUEGO
F = FIRE
A = ALERT

Functions
A = Horn only
V = Strobe only
AV = Horn-Strobe

LIFE SAFETY & INCIDENT MANAGEMENT

Contact us...

Email: *edwards.fire@fs.utc.com*
Web: *edwards-fire.com*

8985 Town Center Pkwy.
Bradenton, FL 34202

EDWARDS is a registered mark in the United States and other countries.

© 2019 United Technologies Corporation.
All rights reserved.