THE MEDICAL CENTER OF AURORA - SOUTH
ED ENTRY AND TRIAGE RENOVATION
MODIFICATION TO EXISTING FIRE ALARM SYSTEM

Provide a full size set of legible approved construction documents **PRINTED IN COLOR** for review by the Field Inspector.

COA Adopted Codes for this project:
ICC-2021 - NEC 2023
NFPA 13-2019 - NFPA 72-2019
COA Amendments 22 & 66

Code violations that are found during inspection are required to be corrected. Permit issuance does not grant approval for any code violation.

City of Aurora Building Division
Project: *TMCA ED Fire Alarm*
Address: *1501 S Potomac St.*
Occupancy Group: *IBC I-2*
Construction Type: *IBC I-A SPK*
RSN: *1844554*
Permit: *2024 2476680 LT*

City of Aurora Building Division
Reviewed for Code Compliance
Approved as Noted: *Rich Tenorio*
Date: *Oct 11, 2024*
2021 INTERNATIONAL CODES & 2023 NEC

Johnson Controls
DISTRICT - 419
14200 E. EXPOSITION AVE
AURORA, CO 80012
SERVICE: 303-355-0500
PHONE: 303-355-0500
FAX: 303-355-0615

NICET CERTIFICATION INFORMATION
CALE RAUCH
NICET Fire Alarm, III
Certification #151588
Valid Through: 12/01/25
08/20/2024

DRAWING INDEX

Sheet List Table

Sheet Number	Sheet Title
General Information (FA-000 Series)	
FA-001	COVER SHEET
Floorplans (FA-100 Series)	
FA-101	1ST FLOOR PARTIAL DEVICE PLACEMENT PLANS - INTERIM & BUILDOUT
Risers (FA-200 Series)	
FA-201	1ST FLOOR PARTIAL RISER DIAGRAM - INTERIM & BUILDOUT
Panel Details (FA-500 Series)	
FA-501	NODE-1 FIRE ALARM CONRTOL PANEL & 4009 NAC PANEL DETAILS
Calculations (FA-600 Series)	
FA-601	NODE-1 4100U FACP CALCULATIONS AND SCHEDULES INTERIM
FA-602	NODE-1 4100U FACP CALCULATIONS AND SCHEDULES INTERIM CONTINUED
FA-603	NODE-1 4100U FACP CALCULATIONS AND SCHEDULES BUILDOUT
FA-604	NODE-1 4100U FACP CALCULATIONS AND SCHEDULES BUILDOUT CONTINUED
FA-605	NODE-1 4100U FACP CALCULATIONS AND SCHEDULES BUILDOUT CONTINUED
Typical Details (FA-700 Series)	
FA-701	TYPICAL DEVICE WIRING
Isometrics (FA-900 Series)	
FA-801	STATIC GRAPHIC MAP AT FACP IN FIRE COMMAND CENTER 1E-2902A

BUILDING/FIRE DEPT PLAN REVIEW #:

AURORA BUILDING CODES DIVISION
15151 EAST ALAMEDA PARKWAY, 2ND FLOOR PERMIT CENTER
AURORA, COLORADO 80012
(303) 739–7420

GENERAL NOTES

1. THESE DRAWINGS DEPICT GENERAL LOCATIONS OF LIFE SAFETY EQUIPMENT & FIELD DEVICES. EXACT ROUTING OF CONDUITS IS TO BE DETERMINED IN THE FIELD BY THE INSTALLING CONTRACTOR TO SUIT CONDITIONS. ALL CHANGES SHALL BE CLEARLY INDICATED ON THE RECORD DRAWINGS.
2. SHOULD ANY CONDITIONS EXIST THAT DIFFER FROM WHAT IS INDICATED ON THESE DRAWINGS WHICH CAUSE MAJOR DEVIATIONS IN THE WORK SHOWN, THE CONTRACTOR SHALL CONTACT JOHNSON CONTROLS IN A TIMELY MANNER SO AS NOT TO IMPAIR THE CONSTRUCTION SCHEDULE.
3. CONTRACTOR IS RESPONSIBLE FOR MAKING AND OBTAINING APPROVAL FOR ALL NECESSARY ADJUSTMENTS IN CIRCUITING AS REQUIRED TO ACCOMMODATE THE RELOCATION OF EQUIPMENT AND/OR DEVICES WHICH ARE AFFECTED BY ANY AUTHORIZED CHANGE. ALL CHANGES SHALL BE CLEARLY INDICATED ON THE RECORD DRAWINGS.
4. A STAMPED SET OF APPROVED FIRE ALARM DRAWINGS SHALL BE AT THE JOB SITE AND SHALL BE USED FOR INSTALLATION.
5. THE POWER CIRCUIT TO THE FACP AND TO THE FIRE ALARM POWER SUPPLIES SHALL BE ON A DEDICATED 120V, 20A BRANCH CIRCUIT BREAKER, AND SHALL HAVE A RED MARKING, LOCK-ON PROVISION AND SHALL BE IDENTIFIED AS "FIRE ALARM CIRCUIT CONTROL." THE LOCATION OF THE CIRCUIT DISCONNECT MEANS (CIRCUIT BREAKER) SHALL BE PERMANENTLY IDENTIFIED AT THE FIRE ALARM CONTROL UNIT.
6. UPDATE THE AS-BUILT DRAWING SET DAILY WITH JOB PROGRESS. RETURN THE AS-BUILT DRAWING SET TO JOHNSON CONTROLS NO LATER THAN 7 DAYS AFTER FINAL TEST.
7. THE CONTRACTOR WILL MAINTAIN ALL AREAS OF THE BUILDING IN A NEAT AND WORKMANLIKE MANNER.
8. DO NOT APPLY POWER EXCEPT IN THE PRESENCE OF A FACTORY TRAINED JOHNSON CONTROLS TECHNICAL REPRESENTATIVE.
9. ANY SMOKE DETECTOR HEAD INSTALLED BEFORE THE BUILDING IS CLEANED AND ACCEPTED SHALL BE COVERED TO PROTECT FROM DUST. ANY FALSE ALARMS DUE TO DIRT CONTAMINATED HEADS SHALL BE THE RESPONSIBILITY OF THE FIRE ALARM INSTALLER.
10. THE FIRE ALARM INSTALLER WILL MAINTAIN THE FIRE RESISTANCE INTEGRITY OF ALL WALL, CEILING, AND ROOF ASSEMBLIES ANY TIME THAT WORK IS NOT ACTIVELY BEING PERFORMED.
11. INSTALLATION OF DEVICES SHALL BE IN ACCORDANCE WITH MANUFACTURER'S INSTRUCTIONS. POWER LIMITED AND NON-POWER LIMITED FIELD WIRING MUST BE INSTALLED WITHIN THE FACP ENCLOSURE IN ACCORDANCE WITH MANUFACTURER'S INSTRUCTIONS AND APPLICABLE ELECTRICAL CODES. REFER TO "APPLICABLE CODES & STANDARDS" FOR SPECIFIC CODE REFERENCES.
12. ALL WIRING SHALL BE INSTALLED ACCORDING TO APPLICABLE ELECTRICAL CODES.
13. FIRE ALARM CIRCUITS SHALL BE IDENTIFIED IN ACCORDANCE WITH APPLICABLE ELECTRICAL CODES. MARK ALL FIRE ALARM WIRES IN ACCORDANCE WITH APPLICABLE ELECTRICAL CODE SECTIONS FOR POWER LIMITED AND NON-POWER LIMITED WIRE.
14. FIRE ALARM CABLE INSTALLED IN DUCTS, PLENUMS, AND OTHER SPACES USED FOR ENVIRONMENTAL AIR SHALL BE TYPE FPLP.
15. FIRE ALARM CABLE INSTALLED IN THE VERTICAL RUNS AND PENETRATING MORE THAN ONE FLOOR OR CABLES INSTALLED IN VERTICAL RUNS IN SHAFTS SHALL BE TYPE FPLR.
16. FIRE ALARM CABLE INSTALLED IN UNDERGROUND CONDUIT OR OTHER WET LOCATIONS SHALL BE UL LISTED FOR WET LOCATIONS.
17. FIRE ALARM CIRCUITS EXTENDING BEYOND ONE BUILDING AND RUN OUTDOORS SHALL BE INSTALLED IN ACCORDANCE APPLICABLE ELECTRICAL CODES, WHERE APPLICABLE.
18. ALL WIRING, INCLUDING SHIELDS MUST BE DRY AND FREE OF SHORTS AND GROUNDS.
19. ALL SHIELDED WIRE MUST HAVE SHIELD CONTINUITY AT FULL LENGTH OF THE WIRE.
20. ONLY SYSTEM WIRING CAN BE RUN IN THE SAME CONDUIT.
21. 120VAC IS NOT PERMITTED IN THE SAME CONDUIT WITH LOW VOLTAGE WIRING.
22. MAINTAIN MAXIMUM CONDUIT FILL RATIO AS PER APPLICABLE ELECTRICAL CODES REQUIREMENTS.
23. EXISTING CONDUITS MAY BE USED BY THE INSTALLATION CONTRACTOR AS DEEMED NECESSARY; HOWEVER, ANY EXISTING CONDUIT WILL BE USED ONLY IF CONDUITS MEET CURRENT STANDARDS AND CODES. JOHNSON CONTROLS MAKES NO STATEMENTS WRITTEN OR VERBAL AS TO THE CONDITION OF EXISTING CONDUITS.

IMPORTANT NOTICE TO USER: This information may not be sold or transferred to any third party, used on other projects or additions to the project for which it was prepared, or used for completion of this project by any third party. Johnson Controls disclaims all liability for the use or reuse of altered files by the user or any third party and such use will be a user's sole risk. User shall, to the fullest extent permitted by law, defend, indemnify, and hold Johnson Controls harmless from any and all claims for loss, damage or injury arising directly or indirectly from any such unauthorized use.

LEGENDS

FIRE ALARM SYMBOL LEGEND

QTY	SYMBOL	DESCRIPTION	BRAND	MODEL	BACKBOX	WIRE TYPE
		PANELS				
1N	EPR#	4009 TRUEALERT ADDRESSABLE IDNAC REPEATER, 120/240 VAC, PLATINUM W/ SET OF (2) 10AH BATTERIES	SIMPLEX	4009-9601 2081-9274	SIMPLEX CABINET	N/A
1RR	MAP	EXISTING GRAPHIC MAP	BY OTHERS	BY OTHERS	MOUNTS TO WALL	
		INITIATING DEVICES				
26N	S	ADDRESSABLE PHOTOELECTRIC SMOKE SENSOR W/ STANDARD BASE	SIMPLEX	4098-9714 HEAD 4098-9792 BASE	4" OCT, 1-1/2" D	Mi
12N	H	ADDRESSABLE STANDARD HEAT SENSOR W/ EXISTING STANDARD BASE	SIMPLEX	4098-9733 HEAD 4098-9792 BASE	4" OCT, 1-1/2" D	Mm
2N	F	ADDRESSABLE DOUBLE ACTION MANUAL PUSH/PULL STATION	SIMPLEX	4099-9006	4" SQ, 2-1/8" D W/ 3/4" SINGLE GANG COVER EXTENSION	Mi
1N	S S	ADDRESSABLE DUCT SMOKE DETECTOR W/ RELAY OUTPUT S = SUPPLY, R= RETURN SAMPLING TUBE, 45°	SIMPLEX SIMPLEX	4098-9756 4098-9856	MOUNTS TO DUCTWORK	Mi P
		MODULES AND RELAYS				
1N	R	ENCAPSULATED RELAY	SIMPLEX	4098-9843	SINGLE GANG 2-1/8" D W/ COVER	R
1N	AV	ISOLATOR MODULE, IDNAC	SIMPLEX	4905-9929	4" SQ. 2-1/8" D W/ COVER	A
		NOTIFICATION APPLIANCES				
16N	#	ADDRESSABLE MULTI-TONE HORN/STROBE, WALL MOUNT, RED, FIRE	SIMPLEX	49MTV-WRF	SINGLE GANG 1-1/2" D	A
11N	#	ADDRESSABLE MULTI-CANDELA STROBE, CEILING MOUNT, APPLIANCE ONLY, CLEAR LENS	SIMPLEX	49VO-APPLC	4" SQ. 1-1/2" D	A
		APPLIANCE COVER, RED, FIRE LETTERING	SIMPLEX	49VOC-CRF		
2N	# R	ADDRESSABLE MULTI-HIGH-CANDELA STROBE, CEILING MOUNT, APPLIANCE ONLY, RED LENS	SIMPLEX	49VOH-APPLCR	4" SQ. 1-1/2" D	A
		APPLIANCE COVER, RED, FIRE LETTERING	SIMPLEX	49VOC-CRF		
3N	#	ADDRESSABLE STROBE, WALL MOUNT, RED, CLEAR LENS, FIRE	SIMPLEX	49VO-WRF	SINGLE GANG 1-1/2" D	A
		EXISTING CONVENTIONAL 15-CANDELA HORN/STROBE, WALL MOUNT, RED, CLEAR LENS, FIRE	SIMPLEX	4903-9292	4" SQ. 1-1/2" D	V
		MISCELLANEOUS DEVICES				
1N		REMOTE TEST STATION	SIMPLEX	2098-9806	SINGLE GANG 2"D	K
1N 2RL	10K	END-OF-LINE RESISTOR 10kΩ, 1/2W (EOL)	SIMPLEX	4081-9008		
		EXISTING DOOR HOLDER	BY OTHERS	BY OTHERS		D

GENERAL NOTES:

1. THE INFORMATION OR SYMBOLS SHOWN IN BOLD LINETYPE ARE NEW OR RELOCATED.
2. THE INFORMATION OR SYMBOLS SHOWN IN LIGHT LINETYPE ARE EXISTING TO REMAIN.

FIRE ALARM WIRE LEGEND

	CIRCUIT DESCRIPTION	CONSTRUCTION	GAUGE	CIRCUIT PROPERTIES	ACCEPTABLE CABLE TYPES: FPLR	FPLP	THHN	TFFN	OUTDOOR ** C.I.
A	ADDRESSABLE NOTIFICATION	UTP SOLID	14 AWG	60pf/ft. MAX CAPACITANCE; 3 twists/ft. MINIMUM	X	X			
Ac	ADDRESSABLE NOTIFICATION - CI	UTP SOLID - CI	14 AWG	60pf/ft. MAX CAPACITANCE; 3 twists/ft. MINIMUM	X	X			X
D	DOOR HOLDER	2 COND. SOLID	14 AWG		X	X	X	X	
H	AUDIBLE CIRCUIT	2 COND. SOLID	14 AWG		X	X			
K	REMOTE TEST SWITCH/LED	(2) 2 COND. SOLID	14 AWG		X	X			
Mm	MAPNET	STP SOLID	18 AWG	0.60µF MAX TOTAL LINE CAPACITANCE	X	X			
Mi	IDNET	UTP SOLID	18 AWG	0.60µF MAX TOTAL LINE CAPACITANCE	X	X			
P	POWER	2 COND. SOLID	14 AWG		X	X	X	X	
R	RELAY	2 COND. SOLID	14 AWG		X	X	X	X	
V	VISUAL	2 COND. SOLID	14 AWG		X	X			

CONDUIT SIZE	MAX CONDUCTOR AREA	CONDUIT SIZE	MAX CONDUCTOR AREA
1/2"	0.122 SQ INCH*	1-1/4"	0.598 SQ INCH*
3/4"	0.213 SQ INCH*	1-1/2"	0.814 SQ INCH*
1"	0.346 SQ INCH*	2"	1.342 SQ INCH*

* 40% CONDUIT FILL PER N.E.C.
STP = SHIELDED TWISTED PAIR
UTP = UNSHIELDED TWISTED PAIR

ITEMS SUCH AS CAPACITANCE BETWEEN CONDUCTORS AND WIRE GAUGE CAN BE CRUCIAL TO THE CIRCUIT DESIGN OF THIS SYSTEM INSTALLATION. THE INSTALLING CONTRACTOR IS RESPONSIBLE FOR SELECTING AND INSTALLING CABLE MANUFACTURER AND MODEL THAT MEETS OR EXCEEDS THE ABOVE REQUIREMENTS. RECOMMENDED CABLE MANUFACTURERS AND MODEL NUMBERS ARE AVAILABLE UPON REQUEST.

BUILDING/FIRE DEPT GENERAL NOTES

- FIRE ALARM SYSTEMS CANNOT BE COMBINED WITH BURGLAR ALARM SYSTEMS.
- THE INSTALLER IS REQUIRED TO COORDINATE WITH THE MECHANICAL CONTRACTOR TO DETERMINE INSTALLATION OF SMOKE DETECTORS OR SENSORS (i.e., NOT CLOSER THAN 3 FEET FROM ANY SUPPLY/RETURN DIFFUSER AND THAT ADDITIONAL DETECTION MAY BE REQUIRED DUE TO THE RELOCATION OR SPACING ADJUSTMENT OF DETECTORS, AS A RESULT).
- FIRE ALARM DEVICES MUST BE PLACED IN PROTECTED AREAS WITH AMBIENT TEMPERATURE RANGING FROM 32 DEGREES TO 120 DEGREES F.
- DO NOT PLACE SMOKE DETECTORS WITHIN 3 FEET OF AIR SUPPLY REGISTERS AND DIFFUSERS.
- FIRE ALARM SYSTEM SHALL BE MONITORED BY A CLASS 1 CENTRAL STATION.
- FIRE ALARM CONTROL PANEL WILL BE PLACED IN THE LOCATION SPECIFIED WITHIN THE PLAN SUBMITTAL UNLESS APPROVED BY THE LIFE SAFETY FIELD INSPECTOR.
- CITY OF AURORA BUILDING CODES DIVISION DOES NOT GRANT APPROVAL FOR ANY VIOLATIONS OF ADOPTED FIRE CODE. CODE VIOLATIONS UNCOVERED DURING FIELD INSPECTIONS MUST BE CORRECTED.
- PER THE IFC AND THE NEC THE INSTALLER MUST REQUEST A ROUGH WIRING INSPECTION IN THE FIRE ALARM SYSTEM PRIOR TO REQUESTING A FIRE ALARM FINAL INSPECTION.
- THE CONTRACTOR SHALL CONDUCT A "PRE–TEST" OF THE PROJECT AREA PRIOR TO SCHEDULING AN ACCEPTANCE TEST WITH THE BUILDING CODES DIVISION.
- REMOTE ALARM INDICATORS SHALL BE PROVIDED FOR ANY AUTOMATIC FIRE ALARM DETECTOR LOCATED IN A CONCEALED LOCATION WITH A NORMALLY LOCKED DOOR.
- AT THE TIME OF FINAL FIRE ALARM INSPECTION, THE SYSTEM MUST BE SUPERVISED/MONITORED BY A CLASS 1 CENTRAL MONITORING AGENCY.
- THE INSTALLING CONTRACTOR (OR DESIGNEE) MUST PROVIDE ALL NECESSARY TESTING EQUIPMENT AND PERFORM ALL TESTING REQUIRED BY THE LIFE SAFETY FIELD INSPECTOR.
- IN–DUCT SMOKE DETECTORS INSTALLED IN CONCEALED LOCATIONS OR, WHERE THE DETECTOR'S ALARM INDICATOR IS NOT READILY VISIBLE TO RESPONDING PERSONNEL SHALL BE PROVIDED WITH A REMOTE INDICATOR(S), REMOTE TEST STATION AND PLACARDING.
- ALL NEW OR EXISTING FIRE ALARM SYSTEMS MUST BE CONNECTED ANY EXTERIOR HORN AND STROBE APPLIANCE. IF THE BUILDING IS FIRE SPRINKLED, A GENERAL ALARM ACTIVATION AT THE FIRE ALARM CONTROL PANEL WILL ACTIVATE THE EXTERIOR HORN AND STROBE. SILENCING THE PANEL MUST ALLOW THE VISUAL DEVICE TO CONTINUE UNTIL THE PANEL IS RESET.
- FIRE ALARM SYSTEMS SHALL INCLUDE BOTH AUDIBLE AND VISUAL ALARMS. VISUAL ALARMS WILL BE REQUIRED IN ALL ACCESSIBLE PUBLIC AND COMMON–USE AREAS PER THE IFC AND THE ANSI A117.1 STANDARD.
- PROVIDE A PRIMARY AND SECONDARY POWER SUPPLY FOR THE FIRE ALARM SYSTEM PER THE IFC, SECTION 907 AND THE NFPA 72.
- FIELD INSPECTION CONSULTATION IS AVAILABLE UPON REQUEST. CALL 303–739–7420 TO REQUEST CONSULTATION.
- THE FIRE ALARM CONTRACTOR MUST COMPLETE THE NFPA 72 "RECORD OF COMPLETION" PRIOR TO SCHEDULING THE AHJ ACCEPTANCE TEST.
- AUDIBLE ALARM SIGNALING DEVICES SHALL EXCEED THE PREVAILING SOUND LEVEL IN A ROOM OR SPACE BY 15 DBA. SOUND LEVELS FOR ALARM SIGNALS SHALL BE 120 DBA MAXIMUM. IFC SECTION 907.

APPLICABLE CODES & STANDARDS

JURISDICTIONS WITHIN THE STATE MAY HAVE AMENDMENTS TO THE STATE ADOPTED CODE. CHECK WITH THE LOCAL JURISDICTION AUTHORITY FOR MORE DETAILS.

International Building Code (IBC), 2021 Edition

International Fire Code (IFC), 2021 Edition

National Electric Code (NFPA 70), 2023 Edition

National Fire Alarm and Signaling Code (NFPA 72), 2022 Edition

Life Safety Code (NFPA 101), 2012 (State) Edition

ICC A117.1 Accessible and Usable Buildings and Facilities, 2017 Edition

ADA Standards for Accessible Design, 2023 Edition

Colorado Department of Health and Environment - Hospital Licensing Rules, 2021 Edition

OCCUPANCY TYPE(S):
I-2 INSTITUTIONAL GROUP

SPRINKLER PROTECTION:
BUILDING IS FULLY SPRINKLERED

AREA:
TOTAL: APPROX. 450,396 SQ. FT. SQ. FT.
SCOPE: APPROX. 4,500 SQ. FT.

STORIES:
TOTAL 6 STORIES + BASEMENT
SCOPE: PARTIAL 1ST FLOOR

CONSTRUCTION:
TYPE 1-A

SCOPE OF WORK

MODIFY EXISTING FIRE ALARM SYSTEM: PROVIDE NEW DEVICES, RELOCATE AND DEMO EXISTING DEVICES AS SHOWN ON DRAWINGS.

SCOPE OF WORK INCLUDES APPROXIMATELY 4500 SQUARE FEET ENCOMPASSING THE FIRST FLOOR OF THE MEDICAL CENTER OF AURORA - SOUTH, LOCATED AT 1501 SOUTH POTOMAC STREET, AURORA, COLORADO 80012. FIRE ALARM IS AFFECTED.

FOR INTERIM: EXISTING AREA TO RECEIVE PARTIAL DEMOLITION TO ALLOW FOR UPDATES TO THE AREA. DURING DEMOLITION, NEW INTERIM HEAT-DETECTORS TO BE INSTALLED IN SCOPE AREA FOR CONSTRUCTION. RE-USE SELECT EXISTING ADDRESSABLE STANDARD INITIATION-BASES WHERE SHOWN. NEW INTERIM HEAT-DETECTORS TO REMAIN ON THE EXISTING 1 M3 CIRCUIT OF THE EXISTING NODE-1 4100U FIRE ALARM CONTROL PANEL (FACP) LOCATED IN FIRE COMMAND CENTER 1E-2902A.

FOR BUILDOUT: REMOVE INTERIM DEVICES FROM SCOPE AREA. NEW ADDRESSABLE INITIATION AND NOTIFICATION DEVICES TO BE INSTALLED. NEW DEVICES WILL TIE TO EXISTING NODE-1 4100U FACP. NEW INITIATION TO TIE TO N1:M13 CIRCUIT. NEW ADDRESSABLE NOTIFICATION TO TIE TO EPS 1:A1:3 AND EPR1 CIRCUIT.

EXISTING STATIC GRAPHIC MAP AT THE FACP TO BE UPDATED WITH NEW ARCHITECTURE AND INITIATION DEVICES.

NEW DEVICES TO FOLLOW EXISTING SEQUENCE OF OPERATIONS; NO FURTHER CHANGES TO OCCUR.

ALL NEW WIRING TO BE CLASS B.

THE EXISTING FIRE ALARM SYSTEM SHALL NOT BE DISCONNECTED OR TAKEN OUT OF SERVICE WITHOUT WRITTEN PERMISSION FROM THE OWNER. IT IS THE CONTRACTOR'S RESPONSIBILITY TO COORDINATE WITH THE OWNER THE TIMING OF ANY EXISTING FIRE ALARM SYSTEM DEMOLITION WORK.

AUTOMATIC FIRE ALARM SYSTEM SHALL TRANSMIT THE ALARM, SUPERVISORY AND TROUBLE SIGNALS TO AN APPROVED SUPERVISING STATION. THE SUPERVISING STATION SHALL BE LISTED AS EITHER UUFX OR UUUS UNDERWRITERS LABORATORY OR SHALL MEET THE REQUIREMENTS OF FACTORY MUTUAL RESEARCH APPROVAL STANDARD 3011. SUPERVISION OF SYSTEM AND LEASED TELEPHONE LINES SHALL BE ARRANGED BY THE OWNER.

ABBREVIATIONS LEGEND

AC = ABOVE CEILING
AFF = ABOVE FINISHED FLOOR
AHJ = AUTHORITY HAVING JURISDICTION
ALM = ALARM
ANN = ANNUNCIATOR
BCU = BLOWER COIL UNIT
C = CEILING MOUNTED
CD = CANDELA RATING
DET = DETECTOR
DGP = DATA GATHERING PANEL
E = EXISTING TO REMAIN
EOL = END OF LINE
EPO = EMERGENCY POWER OFF
ER = ELEVATOR RECALL
FAA = FIRE ALARM ANNUNCIATOR
FACP = FIRE ALARM CONTROL PANEL
FATC = FIRE ALARM TERMINAL CABINET
FBO = FURNISHED BY OTHERS
FCC = FIRE COMMAND CENTER
FSD = FIRE SMOKE DAMPER
FTR = FIRE ALARM TRANSPONDER
H = HIGH HUMIDITY
HT = HEIGHT
HVAC = HEATING VENTILATION & AIR CONDITIONING
IMS = INFORMATION MANAGEMENT SYSTEM
MAX = MAXIMUM
MIN = MINIMUM
N = NEW BLOCK
NAC = NOTIFICATION APPLIANCE CIRCUIT
NDU = NETWORK DISPLAY UNIT
NEC = NATIONAL ELECTRIC CODE
NFPA = NATIONAL FIRE PROTECTION ASSOCIATION
NIC = NOT IN CONTRACT
NPU = NETWORK PROCESSING UNIT
NTS = NOT TO SCALE
PAP = PRE-ACTION PANEL
RC = EXISTING TO REMOVE AND COVER
RD = EXISTING DEVICE TO BE RELOCATED
RL = RELOCATED DEVICE
RR = REMOVE EXISTING & REPLACE WITH NEW
SCC = STATUS COMMAND CENTER
SLC = SIGNALING LINE CIRCUIT
SMK = SMOKE
SUPV = SUPERVISORY
TAC = TRUEALERT ADDRESSABLE CONTROLLER
TOS = TOP OF SHAFT
TRBL = TROUBLE
TS = TAMPER SWITCH
TYP = TYPICAL
UON = UNLESS OTHERWISE NOTED
VCC = VOICE COMMAND CENTER
VT = VALVE TAMPER
W = WATTAGE
W/ = WITH
W/O = WITHOUT
WF = WATERFLOW
WG = WIRE GUARD
WP = WEATHERPROOF
XP = EXPLOSION PROOF

JOHNSON CONTROLS CONTACTS

Sales Representative
RYAN SCHISSEL
RYAN.SCHISSEL@JCI.COM
PHONE:720-633-5751

Project Manager
JASON ROMERO
JASON.ROMERO@JCI.COM
PHONE:303-349-9483

Drawings Prepared By
CHANNING DIXON
CHANNING.DIXON@JCI.COM

Drawings Checked By
NANCY WILTSIE
NANCY.WILTSIE@JCI.COM
NICET III #93727, EXP. 03/01/2027

Drawings Reviewed By
CALE RAUCH
CALE.RAUCH@JCI.COM
NICET III #151588, EXP. 12/01/2025

PROJECT DIRECTORY

Site
THE MEDICAL CENTER OF AURORA - SOUTH
1501 SOUTH POTOMAC STREET
AURORA, COLORADO 80012
PHONE: 303-695-2600

Owner
HEALTH ONE
4900 SOUTH MONACO STREET
DENVER, COLORADO 80237
PHONE: 303-946-5511

Johnson Controls District - 419
14200 E. EXPOSITION AVE
AURORA, CO 80012
PHONE: 303-355-0500
FAX: 303-355-0615
SERVICE: 303-355-0500

Installer
E LIGHT ELECTRIC SERVICES, INC.
361 INVERNESS DRIVE SOUTH, SUITE B
ENGLEWOOD, COLORADO 80112
PHONE: 303-754-0001

DESIGN STATEMENT

THIS PROJECT'S DESIGN IS BASED ON THE ENGINEERED PLANS AND SPECIFICATIONS PREPARED BY: TREANORHL

ARCHITECTURAL PLANS DATED:	NOVEMBER 10, 2023
MECHANICAL PLANS DATED:	DECEMBER 22, 2023
ELECTRICAL PLANS DATED:	DECEMBER 22, 2023
SPECIFICATIONS DATED:	DECEMBER 22, 2023
ADDENDUM DATED:	

DEVICE TAG LEGEND

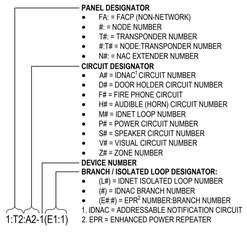

SYSTEM SEQUENCE OF OPERATIONS

M.C.O.A. SOUTH TOWER

SEQUENCE OF OPERATIONS

SYSTEM OUTPUTS	FACP Annunciation						Notification							Required Controls											Supplementary				
SYSTEM INPUTS	ACTUATE COMMON ALARM SIGNAL INDICATOR	ACTUATE AUDIBLE ALARM SIGNAL	ACTUATE COMMON SUPERVISORY SIGNAL INDICATOR	ACTUATE AUDIBLE SUPERVISORY SIGNAL	ACTUATE COMMON TROUBLE SIGNAL INDICATOR	ACTUATE AUDIBLE COMMON TROUBLE SIGNAL	ACTUATE EVACUATION SIGNALS (AUDIBLE/VISUAL)	ACTUATE SPRINKLER BELL	DISPLAY CHANGE OF STATUS AT REMOTE ANNUNCIATOR	TRANSMIT FIRE ALARM SIGNAL TO OFF-SITE REPORTING	TRANSMIT SUPERVISORY SIGNAL TO OFF-SITE REPORTING	TRANSMIT TROUBLE SIGNAL TO OFF-SITE REPORTING	NOTIFY HOSPITAL PBX	FAN SHUT DOWN	DAMPER SHUT DOWN	DOOR HOLD MAG LOCK RELEASE	DOOR FOLD MAG LOCK RELEASE	RELEASE ASSOCIATED ELEV LOBBY DOOR	RELEASE ASSOCIATED ELEV MULTI-USE DOOR	ELEVATOR RECALL - MAIN FLOOR	ELEVATOR SHUT DOWN (1)	ELEVATOR RECALL - ALTERNATE FLOOR	ELEVATOR HAT FLASH	OVERRIDE MUSIC SYSTEM	SILENCE AUDIBLE SIGNAL ONLY, VISUALS TO REMAIN	ACTIVATE OUTDOOR HORN/STROBE (ON GENERAL ALARM)	RESET PANEL TO NORMAL CONDITION	
	A	B	C	D	E	F	G	H	I	J	K	L	M	N	O	P	Q	R	S	T	U	V	W	X	Y	Z		
1 SMOKE DETECTOR	X	X					X		X	X		Y		X	X	X	X						X		X		X	1
2 SMOKE DETECTOR AT 2ND, 4TH & 5TH FLR CLERK DESK	X	X					X		X	X				X	X	X	X						X		X		X	2
3 SMOKE DETECTOR AT SMOKE PARTITION	X	X					X		X	X				X		X	X						X		X		X	3
4 MANUAL PULL STATION	X	X					X		X	X				X		X	X						X		X		X	4
5 HEAT DETECTOR	X	X					X		X	X				X		X	X						X		X		X	5
6 DUCT DETECTOR			X	X					X		X			X	X													6
7 DUCT DETECTOR AT F/S DAMPER			X	X					X		X				X													7
8 MAIN FLR, ELEV. LOBBY SMOKE DETECTOR	X	X					X		X	X				X	X	X	X	X	X	X	X	X	X	X	X	X	X	8
9 ELEV. LOBBY SMOKE DETECTORS (EXCL. MAIN FLR.)	X	X					X		X	X				X		X	X	X		X	X	X	X	X	X	X	X	9
10 ELEV. MECH. ROOM SMOKE DETECTOR	X	X					X		X	X					X								X	X	X	X	X	10
11 ELEV. SHAFT HEAT DETECTOR	X	X					X		X	X					X								X		X	X	X	11
12 ELEV. MECH. ROOM HEAT DETECTOR	X	X					X		X	X					X								X		X	X	X	12
13 WATERFLOW SWITCH	X	X					X		X	X					X										X	X		13
14 TAMPER SWITCH			X	X					X		X																	14
15 POST INDICATOR VALVE SWITCH			X	X					X		X																	15
16 FACP AC POWER FAILURE					X	X						X																16
17 FACP LOW BATTERY					X	X						X																17
18 OPEN CIRCUIT					X	X						X																18
19 GROUND FAULT					X	X						X																19
20 NOTIFICATION APPLIANCE CIRCUIT SHORT					X	X						X																20
21 ALARM SIGNAL SILENCE																								X				21
22 SYSTEM RESET																											X	22
23 CATH LAB BUILDING ALARM	X	X						X					X															23
	A	B	C	D	E	F	G	H	I	J	K	L	M	N	O	P	Q	R	S	T	U	V	W	X	Y	Z		

NOTE: Audible Evacuation Signal shall be Temporal Pattern per NFPA 72.

- *Recovering power after a time delay equal to the time it takes for the car to travel from the highest to the lowest level plus 10 seconds.*

New devices to follow existing Sequence of Operations; no further changes to occur.

Revisions shown with Δ symbol

ISSUE LOC.	DATE	CAD	CHK	DESCRIPTION
MARK				

**FOR P

FIRE ALARM SYMBOL LEGEND

QTY	SYMBOL	DESCRIPTION	BRAND	MODEL	BACKBOX	WIRE TYPE
	PANELS					
1N	EPR#	4009 TRUEALERT ADDRESSABLE IDNAC REPEATER, 120/240 VAC, PLATINUM W/ SET OF (2) 10AH BATTERIES	SIMPLEX	4009-9601 2081-9274	SIMPLEX CABINET	N/A
1RR	MAP	EXISTING GRAPHIC MAP	BY OTHERS	BY OTHERS	MOUNTS TO WALL	
	INITIATING DEVICES					
26N	S	ADDRESSABLE PHOTOELECTRIC SMOKE SENSOR W/ STANDARD BASE	SIMPLEX	4098-9714 HEAD 4098-9792 BASE	4" OCT, 1-1/2" D	Mi
12N		ADDRESSABLE STANDARD HEAT SENSOR W/ EXISTING STANDARD BASE	SIMPLEX	4098-9733 HEAD 4098-9792 BASE	4" OCT, 1-1/2" D	Mm
2N	F	ADDRESSABLE DOUBLE ACTION MANUAL PUSH/PULL STATION	SIMPLEX	4099-9006	4" SQ, 2-1/8" D W/ 3/4" SINGLE GANG COVER EXTENSION	Mi
1N	S S	ADDRESSABLE DUCT SMOKE DETECTOR W/ RELAY OUTPUT S = SUPPLY; R= RETURN	SIMPLEX	4098-9756	MOUNTS TO DUCTWORK	Mi P
		SAMPLING TUBE, 49"	SIMPLEX	4098-9856		
	MODULES AND RELAYS					
1N	P	ENCAPSULATED RELAY	SIMPLEX	4098-9843	SINGLE GANG 2-1/8" D W/ COVER	R
1N	IM	ISOLATOR MODULE, IDNAC	SIMPLEX	4905-9929	4" SQ. 2-1/8" D W/ COVER	A
	NOTIFICATION APPLIANCES					
16N	#	ADDRESSABLE MULTI-TONE HORN/STROBE, WALL MOUNT, RED, FIRE	SIMPLEX	49MTV-WRF	SINGLE GANG 1-1/2" D	A
11N	#	ADDRESSABLE MULTI-CANDELA STROBE, CEILING MOUNT, APPLIANCE ONLY, CLEAR LENS	SIMPLEX	49VO-APPLC	4" SQ. 1-1/2" D	A
		APPLIANCE COVER, RED, FIRE LETTERING	SIMPLEX	49VOC-CRF		
2N	# R	ADDRESSABLE MULTI-HIGH-CANDELA STROBE, CEILING MOUNT, APPLIANCE ONLY, RED LENS	SIMPLEX	49VOH-APPLCR	4" SQ. 1-1/2" D	A
		APPLIANCE COVER, RED, FIRE LETTERING	SIMPLEX	49VOC-CRF		
3N	#	ADDRESSABLE STROBE, WALL MOUNT, RED, CLEAR LENS, FIRE	SIMPLEX	49VO-WRF	SINGLE GANG 1-1/2" D	A
		EXISTING CONVENTIONAL 15-CANDELA HORN/STROBE, WALL MOUNT, RED, CLEAR LENS, FIRE	SIMPLEX	4903-9292	4" SQ. 1-1/2" D	V
	MISCELLANEOUS DEVICES					
1N		REMOTE TEST STATION	SIMPLEX	2098-9806	SINGLE GANG 2"D	K
1N 2RL	10K	END-OF-LINE RESISTOR 10kΩ, 1/2W (EOL)	SIMPLEX	4081-9008		
		EXISTING DOOR HOLDER	BY OTHERS	BY OTHERS		D

FIRE ALARM WIRE LEGEND

	CIRCUIT DESCRIPTION	CONSTRUCTION	GAUGE	CIRCUIT PROPERTIES	FPLR	FPLP	THHN	TFFN	OUTDOOR **	C.I.
					ACCEPTABLE CABLE TYPES					
A	ADDRESSABLE NOTIFICATION	UTP SOLID	14 AWG	60pf/ft. MAX CAPACITANCE; 3 twists/ft. MINIMUM	X	X				
Ac	ADDRESSABLE NOTIFICATION - CI	UTP SOLID - CI	14 AWG	60pf/ft. MAX CAPACITANCE; 3 twists/ft. MINIMUM	X	X				X
D	DOOR HOLDER	2 COND. SOLID	14 AWG		X	X	X	X		
H	AUDIBLE CIRCUIT	2 COND. SOLID	14 AWG		X	X				
K	REMOTE TEST SWITCH/LED	(2) 2 COND. SOLID	14 AWG		X	X				
Mm	MAPNET	STP SOLID	18 AWG	0.60µF MAX TOTAL LINE CAPACITANCE	X	X				
Mi	IDNET	UTP SOLID	18 AWG	0.60µF MAX TOTAL LINE CAPACITANCE	X	X				
P	POWER	2 COND. SOLID	14 AWG		X	X	X	X		
R	RELAY	2 COND. SOLID	14 AWG		X	X	X	X		
V	VISUAL	2 COND. SOLID	14 AWG		X	X				

CONDUIT SIZE	MAX CONDUCTOR AREA	CONDUIT SIZE	MAX CONDUCTOR AREA
1/2"	0.122 SQ. INCH*	1-1/4"	0.598 SQ INCH*
3/4"	0.213 SQ INCH*	1-1/2"	0.814 SQ INCH*
1"	0.346 SQ INCH*	2"	1.342 SQ INCH*

* 40% CONDUIT FILL PER N.E.C.
STP = SHIELDED TWISTED PAIR
UTP = UNSHIELDED TWISTED PAIR

ITEMS SUCH AS CAPACITANCE BETWEEN CONDUCTORS AND WIRE GAUGE CAN BE CRUCIAL TO THE CIRCUIT DESIGN OF THIS SYSTEM INSTALLATION. THE INSTALLING CONTRACTOR IS RESPONSIBLE FOR SELECTING AND INSTALLING CABLE MANUFACTURER AND MODEL THAT MEETS OR EXCEEDS THE ABOVE REQUIREMENTS. RECOMMENDED CABLE MANUFACTURERS AND MODEL NUMBERS ARE AVAILABLE UPON REQUEST.

GENERAL NOTES:

1. ALL CEILINGS ARE ASSUMED TO BE 8'-6" EXST, SMOOTH CONSTRUCTION UNLESS NOTED OTHERWISE.
2. ALL NOTIFICATION APPLIANCE CANDELA INTENSITY PLUGS SHALL RETAIN THEIR FACTORY SETTING OF "FACP" UNLESS OTHERWISE DIRECTED BY THE AUTHORITY HAVING JURISDICTION.
3. DO NOT CHANGE DEFAULT APPLIANCE CONFIGURATION SWITCH SETTINGS ON ADDRESSABLE A/V DEVICES (CFIG1). REFER TO DEVICE DETAILS AND INSTALLATION INSTRUCTIONS FOR MORE INFORMATION.
4. THE DEVICE ADDRESSES INDICATED ON THESE DRAWINGS ARE AN ALPHANUMERIC DESCRIPTION OF WHICH CIRCUIT THE DEVICE IS LOCATED ON. DEVICES MAY BE ASSIGNED A DIFFERENT NUMBER WITHIN THE PANEL PROGRAM. CONSULT WITH A JOHNSON CONTROLS TECHNICIAN BEFORE APPLYING A PHYSICAL LABEL TO ANY DEVICES.
5. THE INFORMATION OR SYMBOLS SHOWN IN BOLD LINETYPE ARE NEW OR RELOCATED.
6. THE INFORMATION OR SYMBOLS SHOWN IN LIGHT LINETYPE ARE EXISTING.
7. ALL ITEMS THAT ARE HATCHED ARE NOT IN THIS SCOPE OF WORK.

KEYNOTES:

1. DEVICE IS FOR INTERIM CONSTRUCTION. TO BE REMOVED DURING BUILDOUT CONSTRUCTION.
2. INTERIM HEAT DETECTOR. REUSE EXISTING BASE. RETAIN ADDRESS, WIRING, AND LOCATION. TO BE REMOVED AND REPLACED WITH NEW SMOKE DETECTOR AFTER CONSTRUCTION.
3. EXISTING CUSTOMER MADE GRAPHIC MAP TO BE UPDATED INTERNALLY BY OTHERS. THE FIRE ALARM GRAPHIC MAP TO BE UPDATED FOR THIS PROJECT IS LOCATED AT THE FACP IN FIRE COMMAND CENTER 1E-2902A.

City of Aurora Building Division
Reviewed for Code Compliance
Approved as Noted: Rich Tenorio
Date: Oct 11, 2024
2021 INTERNATIONAL CODES & 2023 NEC

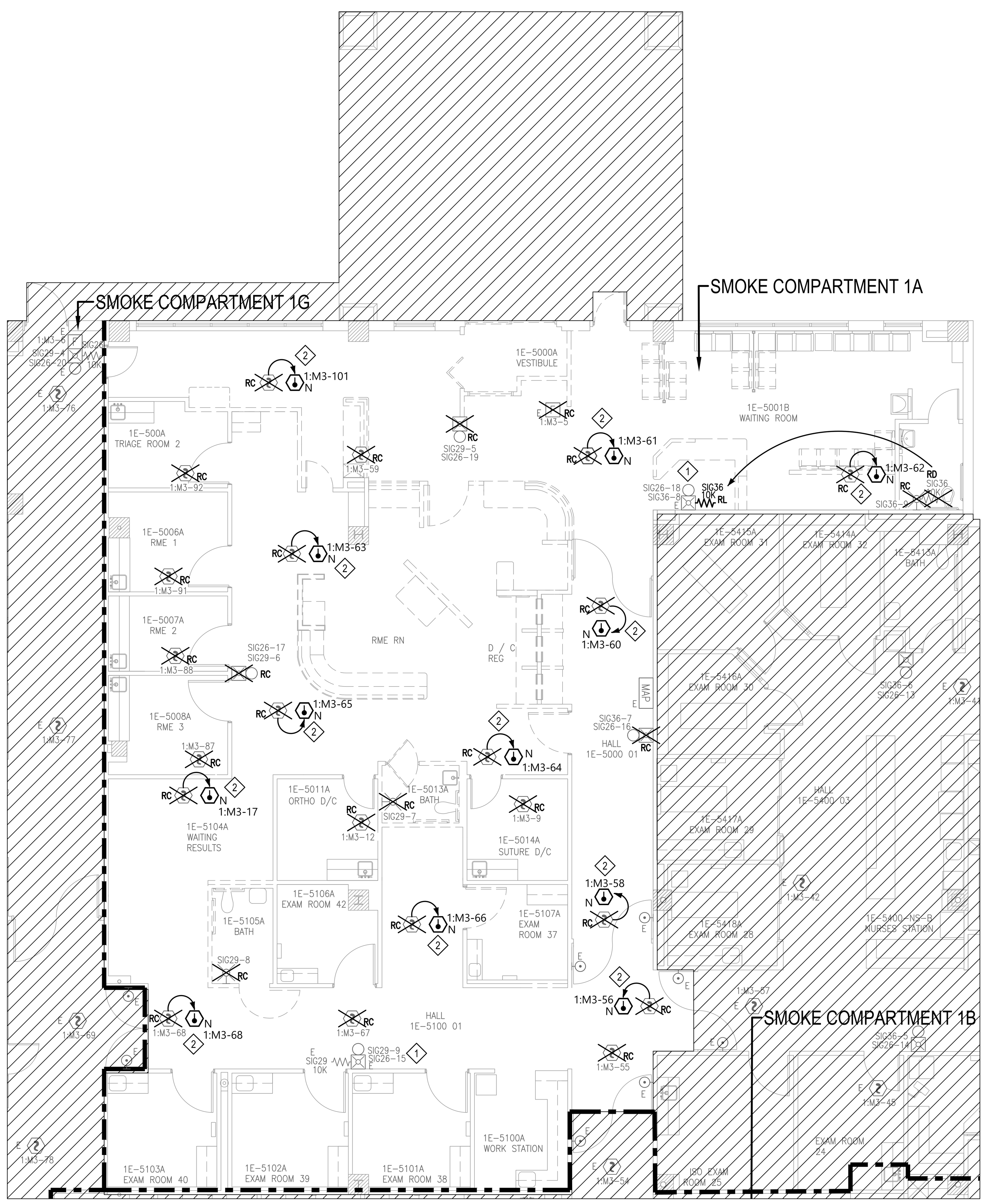

1ST FLOOR PARTIAL DEVICE PLACEMENT PLAN - INTERIM
SCALE:1/8" = 1'-0"

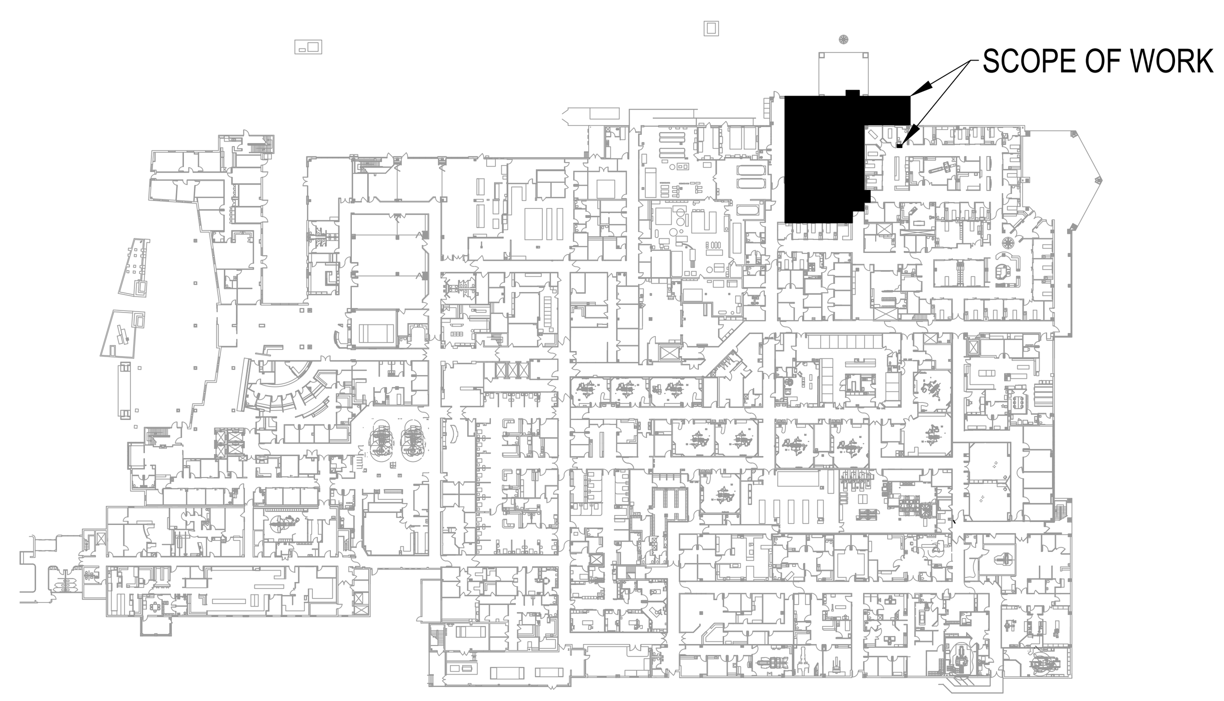

1ST FLOOR KEYPLAN
SCALE:N.T.S.

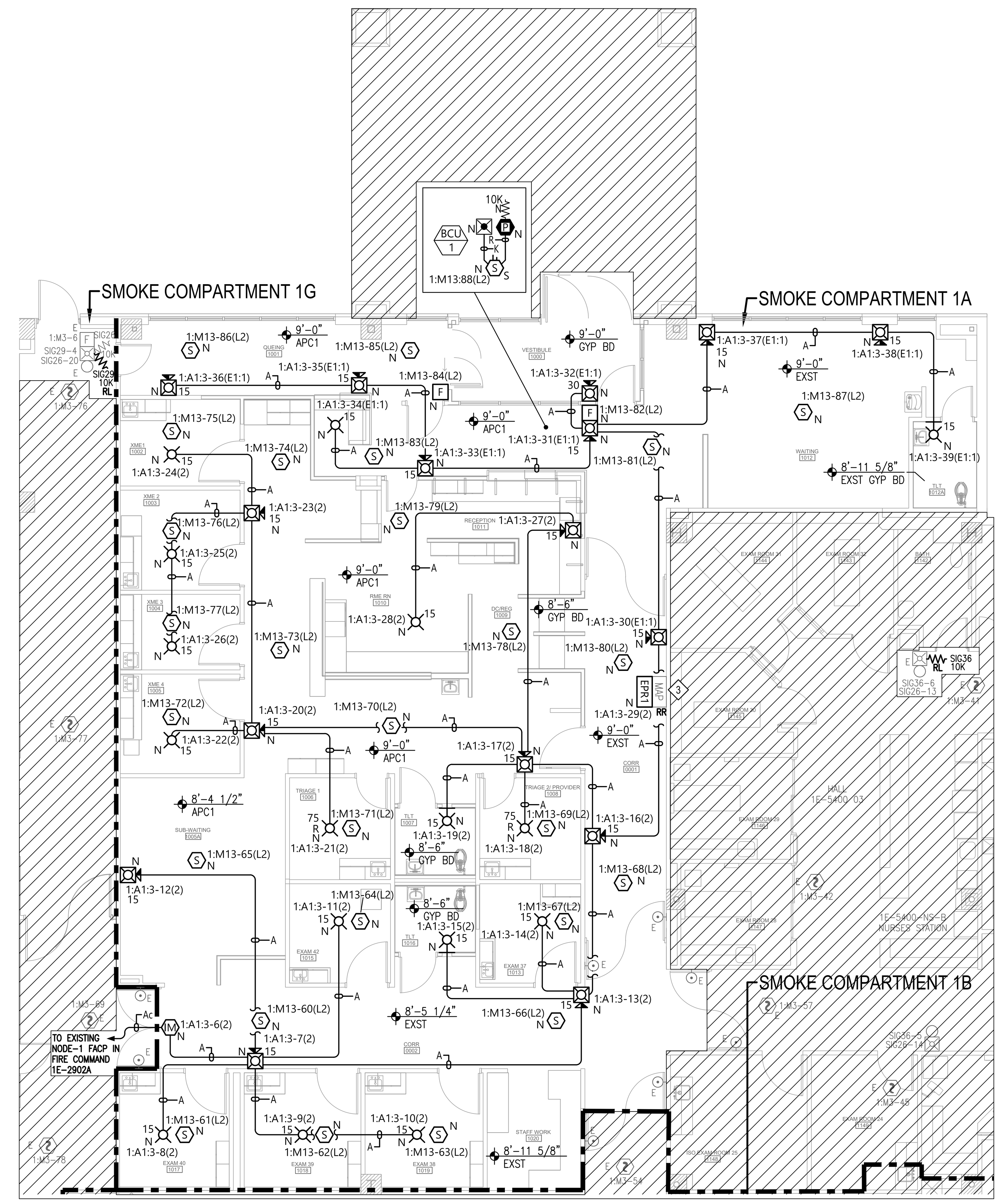

1ST FLOOR PARTIAL DEVICE PLACEMENT PLAN - BUILDOUT
SCALE:1/8" = 1'-0"

Johnson Controls
DISTRICT - 419
14200 E. EXPOSITION AVE
AURORA, CO 80012
SERVICE: 303-355-0500
PHONE: 303-355-0500
FAX: 303-355-0615

NICET CERTIFICATION INFORMATION
CALE RAUCH
NICET Fire Alarm, III
Certification #151588
Valid Through: 12/01/25
08/20/2024

THE MEDICAL CENTER OF AURORA - SOUTH ED ENTRY AND TRIAGE RENOVATION

THE MEDICAL CENTER OF AURORA - SOUTH
1501 SOUTH POTOMAC STREET
AURORA, COLORADO 80012

ISSUE LOG: MARK | DATE | CAD | CHK | DESCRIPTION
Revisions shown with symbol

FOR PERMIT

DRAWN BY:	CCD
CHECKED BY:	CBR
ISSUE DATE:	8/14/24
JOB #:	
PROJECT #:	419:650521647

JOHNSON CONTROLS © 2024

SYSTEM: FIRE ALARM SYSTEM

SHEET: 1ST FLOOR PARTIAL DEVICE PLACEMENT PLANS - INTERIM & BUILDOUT

FA-101

FILE PATH: C:\Users\jdixonc4\OneDrive - Johnson Controls\Medical Center of Aurora\1501 S Potomac - Aurora South\South Tower - Node 1\43-1st ED Entry & Triage Reno - 2024 - 650521647\Fire\FA-101.dwg
LAST SAVED BY: JDIXONC4
LAST PRINTED: 8/20/2024 11:40:45 AM
30" x 42" - Arch E1 Size

© Johnson Controls 2024. All rights reserved. Reuse, copying, modification or alteration of the drawings and other information contained herein is strictly prohibited.

FIRE ALARM SYMBOL LEGEND

QTY	SYMBOL	DESCRIPTION	BRAND	MODEL	BACKBOX	WIRE TYPE
		PANELS				
1N	EPR#	4009 TRUEALERT ADDRESSABLE IDNAC REPEATER, 120/240 VAC, PLATINUM W/ SET OF (2) 10AH BATTERIES	SIMPLEX	4009-9601 2081-9274	SIMPLEX CABINET	N/A
1RR	MAP	EXISTING GRAPHIC MAP	BY OTHERS	BY OTHERS	MOUNTS TO WALL	
		INITIATING DEVICES				
26N	S	ADDRESSABLE PHOTOELECTRIC SMOKE SENSOR W/ STANDARD BASE	SIMPLEX	4098-9714 HEAD 4098-9792 BASE	4" OCT, 1-1/2" D	Mi
12N		ADDRESSABLE STANDARD HEAT SENSOR W/ EXISTING STANDARD BASE	SIMPLEX	4098-9733 HEAD 4098-9792 BASE	4" OCT, 1-1/2" D	Mm
2N	F	ADDRESSABLE DOUBLE ACTION MANUAL PUSH/PULL STATION	SIMPLEX	4099-9006	4" SQ, 2-1/8" D W/ 3/4" SINGLE GANG COVER EXTENSION	Mi
1N	S	ADDRESSABLE DUCT SMOKE DETECTOR W/ RELAY OUTPUT S = SUPPLY; R= RETURN SAMPLING TUBE, 49"	SIMPLEX	4098-9756 4098-9856	MOUNTS TO DUCTWORK	Mi P
		MODULES AND RELAYS				
1N	P	ENCAPSULATED RELAY	SIMPLEX	4098-9843	SINGLE GANG 2-1/8" D W/ COVER	R
1N	IM	ISOLATOR MODULE, IDNAC	SIMPLEX	4905-9929	4" SQ. 2-1/8" D W/ COVER	A
		NOTIFICATION APPLIANCES				
16N	#	ADDRESSABLE MULTI-TONE HORN/STROBE, WALL MOUNT, RED, FIRE	SIMPLEX	49MTV-WRF	SINGLE GANG 1-1/2" D	A
11N	#	ADDRESSABLE MULTI-CANDELA STROBE, CEILING MOUNT, APPLIANCE ONLY, CLEAR LENS APPLIANCE COVER, RED, FIRE LETTERING	SIMPLEX SIMPLEX	49VO-APPLC 49VOC-CRF	4" SQ. 1-1/2" D	A
2N	# R	ADDRESSABLE MULTI-HIGH-CANDELA STROBE, CEILING MOUNT, APPLIANCE ONLY, RED LENS APPLIANCE COVER, RED, FIRE LETTERING	SIMPLEX SIMPLEX	49VOH-APPLCR 49VOC-CRF	4" SQ. 1-1/2" D	A
3N	#	ADDRESSABLE STROBE, WALL MOUNT, RED, CLEAR LENS, FIRE	SIMPLEX	49VO-WRF	SINGLE GANG 1-1/2" D	A
		EXISTING CONVENTIONAL 15-CANDELA HORN/STROBE, WALL MOUNT, RED, CLEAR LENS, FIRE	SIMPLEX	4903-9292	4" SQ. 1-1/2" D	V
		MISCELLANEOUS DEVICES				
1N		REMOTE TEST STATION	SIMPLEX	2098-9806	SINGLE GANG 2"D	K
1N 2RL	10K	END-OF-LINE RESISTOR 10kΩ, 1/2W (EOL)	SIMPLEX	4081-9008		
		EXISTING DOOR HOLDER	BY OTHERS	BY OTHERS		D

FIRE ALARM WIRE LEGEND

	CIRCUIT DESCRIPTION	CONSTRUCTION	GAUGE	CIRCUIT PROPERTIES	FPLR	FPLP	THHN	TFFN	OUTDOOR **	C.I.
					ACCEPTABLE CABLE TYPES					
A	ADDRESSABLE NOTIFICATION	UTP SOLID	14 AWG	60pf/ft. MAX CAPACITANCE; 3 twists/ft. MINIMUM	X	X				
Ac	ADDRESSABLE NOTIFICATION - CI	UTP SOLID - CI	14 AWG	60pf/ft. MAX CAPACITANCE; 3 twists/ft. MINIMUM	X	X				X
D	DOOR HOLDER	2 COND. SOLID	14 AWG		X	X	X	X		
H	AUDIBLE CIRCUIT	2 COND. SOLID	14 AWG		X	X				
K	REMOTE TEST SWITCH/LED	(2) 2 COND. SOLID	14 AWG		X	X				
Mm	MAPNET	STP SOLID	18 AWG	0.60µF MAX TOTAL LINE CAPACITANCE	X	X				
Mi	IDNET	UTP SOLID	18 AWG	0.60µF MAX TOTAL LINE CAPACITANCE	X	X				
P	POWER	2 COND. SOLID	14 AWG		X	X	X	X		
R	RELAY	2 COND. SOLID	14 AWG		X	X	X	X		
V	VISUAL	2 COND. SOLID	14 AWG		X	X				

CONDUIT SIZE	MAX CONDUCTOR AREA	CONDUIT SIZE	MAX CONDUCTOR AREA
1/2"	0.122 SQ. INCH*	1-1/4"	0.598 SQ INCH*
3/4"	0.213 SQ INCH*	1-1/2"	0.814 SQ INCH*
1"	0.346 SQ INCH*	2"	1.342 SQ INCH*

* 40% CONDUIT FILL PER N.E.C.
STP = SHIELDED TWISTED PAIR
UTP = UNSHIELDED TWISTED PAIR

ITEMS SUCH AS CAPACITANCE BETWEEN CONDUCTORS AND WIRE GAUGE CAN BE CRUCIAL TO THE CIRCUIT DESIGN OF THIS SYSTEM INSTALLATION. THE INSTALLING CONTRACTOR IS RESPONSIBLE FOR SELECTING AND INSTALLING CABLE MANUFACTURER AND MODEL THAT MEETS OR EXCEEDS THE ABOVE REQUIREMENTS. RECOMMENDED CABLE MANUFACTURERS AND MODEL NUMBERS ARE AVAILABLE UPON REQUEST.

RISER NOTES:

1. RISER IS A DIAGRAMMATICAL REPRESENTATION OF THE SYSTEM ARCHITECTURE IN BUILDING CROSS SECTION. IT IS NOT INTENDED TO REPRESENT ACTUAL WIRE RUNS, PANEL CONFIGURATIONS OR PENETRATIONS. REFER TO FLOOR PLANS AND PANEL DETAILS FOR CIRCUIT ROUTING AND CONFIGURATION INFORMATION.
2. ALL WIRING SHALL COMPLY WITH APPLICABLE ELECTRICAL CODES. REFER TO 'APPLICABLE CODES & STANDARDS' ON SHEET FA-001 FOR SPECIFIC CODE REFERENCES.
3. THE INFORMATION OR SYMBOLS SHOWN IN BOLD LINETYPE ARE NEW OR RELOCATED.
4. THE INFORMATION OR SYMBOLS SHOWN IN LIGHT LINETYPE ARE EXISTING.
5. ALL ITEMS THAT ARE HATCHED ARE NOT IN THIS SCOPE OF WORK.

KEYNOTES:

1. 120VAC PRIMARY POWER SOURCE SHALL BE A MECHANICALLY PROTECTED BRANCH CIRCUIT. THE CIRCUIT DISCONNECTING MEANS SHALL HAVE A RED MARKING, AND BE IDENTIFIED AS "FIRE ALARM CIRCUIT"

City of Aurora Building Division
Reviewed for Code Compliance
Approved as Noted: *Rich Tenorio*
Date: *Oct 11, 2024*
2021 INTERNATIONAL CODES & 2023 NEC

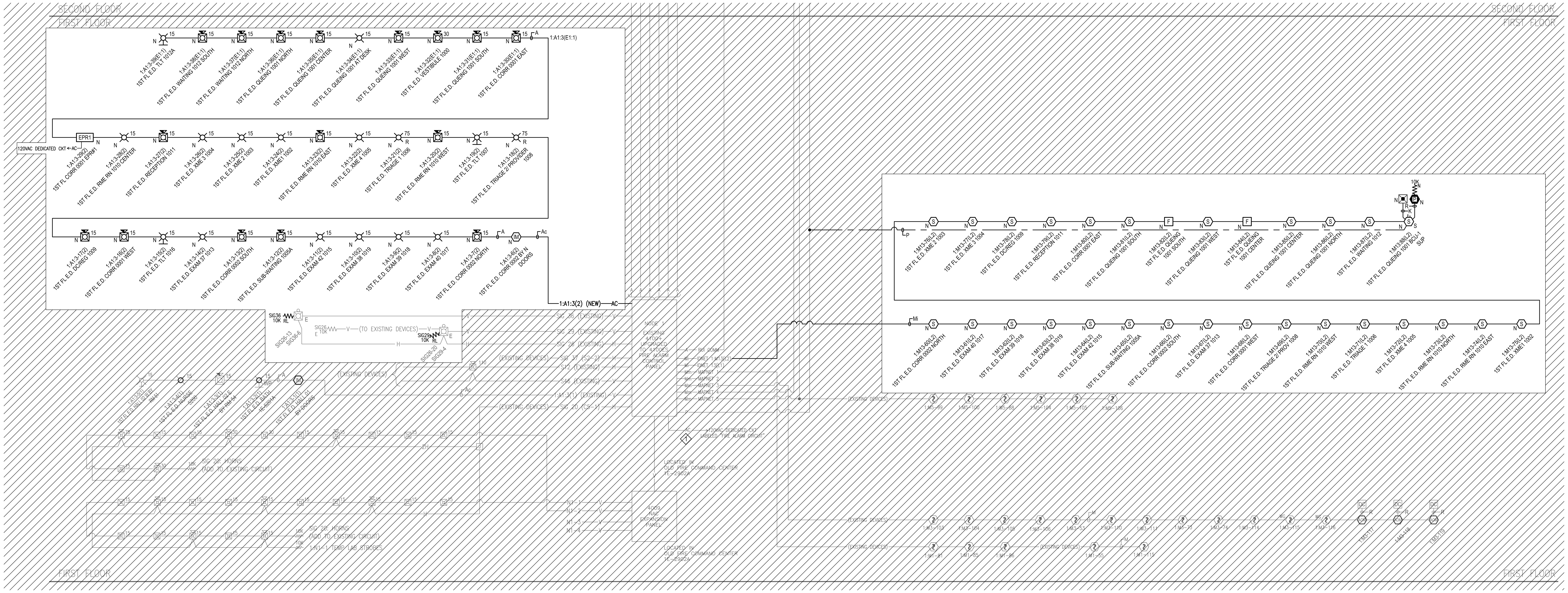

1ST FLOOR PARTIAL RISER DIAGRAM - BUILDOUT
SCALE:N.T.S.

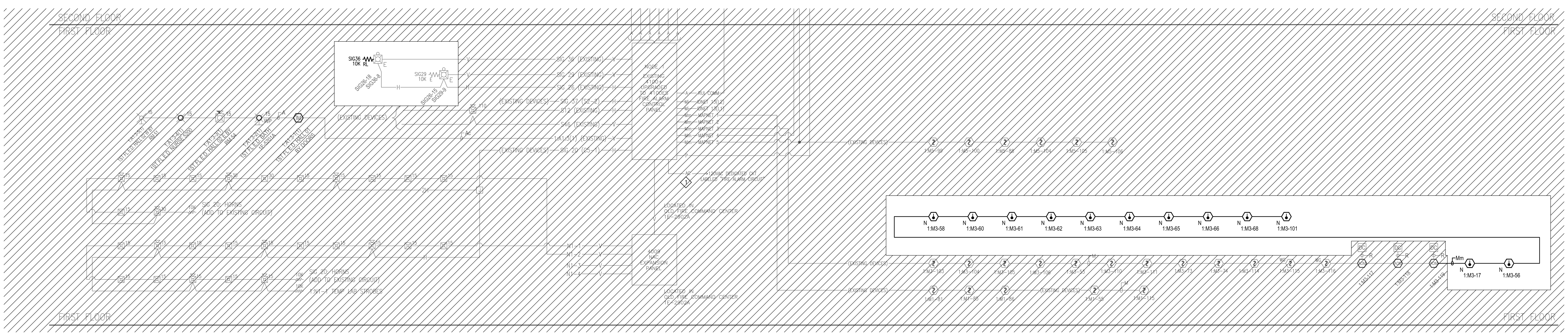

1ST FLOOR PARTIAL RISER DIAGRAM - INTERIM
SCALE:N.T.S.

Johnson Controls
DISTRICT - 419
14200 E. EXPOSITION AVE
AURORA, CO 80012
SERVICE: 303-355-0500
PHONE: 303-355-0500
FAX: 303-355-0615

NICET CERTIFICATION INFORMATION
CALE RAUCH
NICET Fire Alarm, III
Certification #151588
Valid Through: 12/01/25
08/20/2024

THE MEDICAL CENTER OF AURORA - SOUTH ED ENTRY AND TRIAGE RENOVATION

THE MEDICAL CENTER OF AURORA - SOUTH
1501 SOUTH POTOMAC STREET
AURORA, COLORADO 80012

Revisions shown with symbol

ISSUE LOG: MARK	DATE	CAD	CHK	DESCRIPTION

FOR PERMIT

DRAWN BY:	CCD
CHECKED BY:	CBR
ISSUE DATE:	8/14/24
JOB #:	
PROJECT #:	419:650521647

JOHNSON CONTROLS © 2024

SYSTEM: FIRE ALARM SYSTEM

SHEET: 1ST FLOOR PARTIAL RISER DIAGRAM - INTERIM & BUILDOUT

FA-201

FILE PATH: C:\Users\jdixonc4\OneDrive - Johnson Controls\Medical Center of Aurora\1501 S Potomac - Aurora South\South Tower - Node 1\43-1st ED Entry & Triage Reno - 2024 - 650521647\Fire\FA-201.dwg
LAST SAVED BY: JDIXONC4
LAST PRINTED: 8/20/2024 11:40:52 AM
30" x 42" - Arch E1 Size

© Johnson Controls 2024. All rights reserved. Reuse, copying, modification or alteration of the drawings and other information contained herein is strictly prohibited.

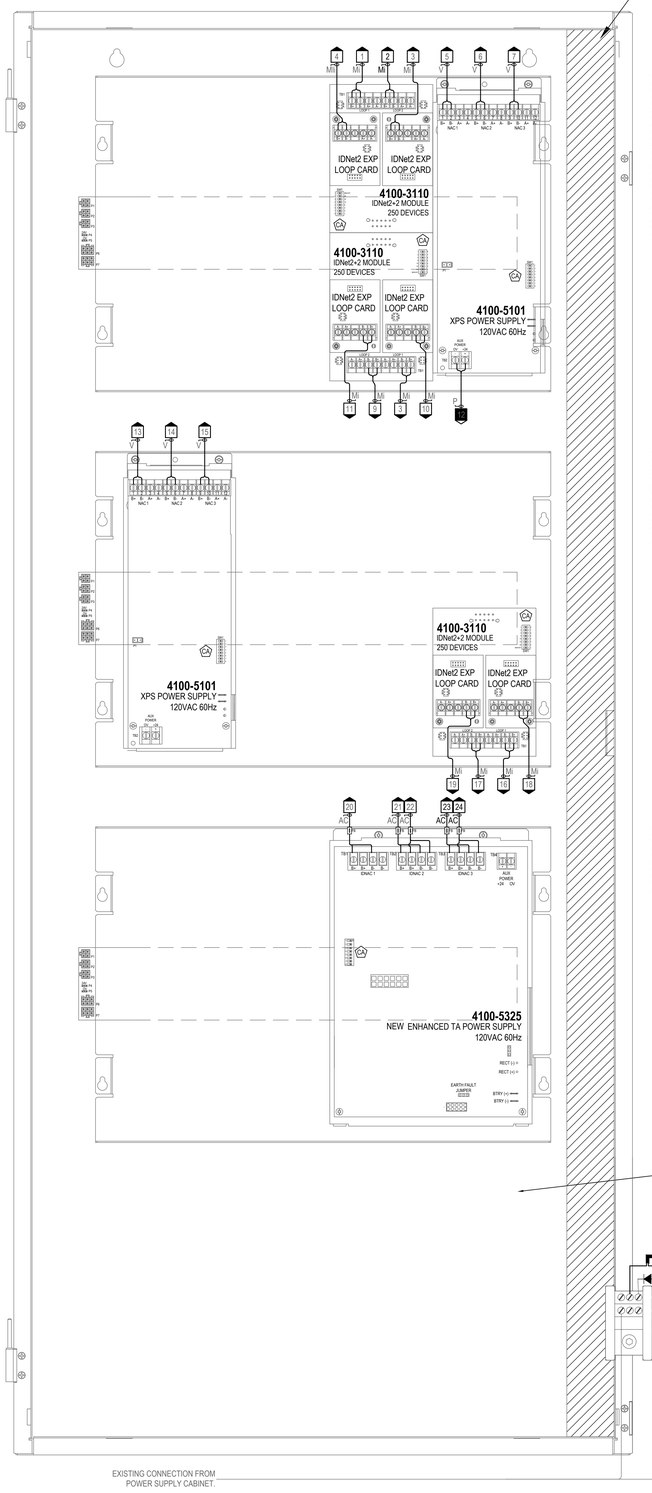

BAY 1 TERMINATIONS

TERMINATION NUMBER	CIRCUIT LABEL	CKT DESCRIPTION	WIRE
1	1:M13(1)	TO IDNET M13(1) DEVICES ON 1ST FLR	Mi
2	**1:M13(2)**	**TO IDNET M13(2) DEVICES ON 1ST FLR**	**Mi**
3	1:M13(3)	FUTURE M13(3) ISOLATED IDNET DEVICES	Mi
4	1:M13(4)	FUTURE M13(4) ISOLATED IDNET DEVICES	Mi
5	1:SIG101	1ST FLR ATS AREA STROBE	V
6	1:SIG102	FUTURE NOTIFICATION DEVICES	V
7	1:SIG103	FUTURE NOTIFICATION DEVICES	V
8	1:M12(1)	TO IDNET M12 DEVICES ON 5TH FLR TWR A	Mi
9	1:M12(2)	FUTURE M12 ISOLATED IDNET DEVICES	Mi
10	1:M12(3)	FUTURE M12 ISOLATED IDNET DEVICES	Mi
11	1:M12(4)	FUTURE M12 ISOLATED IDNET DEVICES	Mi
12	24VDC	24VDC POWER AS NEEDED	P

SCOPE OF WORK

BAY 2 TERMINATIONS

TERMINATION NUMBER	CIRCUIT LABEL	CKT DESCRIPTION	WIRE
13	1:SIG107	FUTURE NOTIFICATION DEVICES	V
14	1:SIG108	FUTURE NOTIFICATION DEVICES	V
15	1:SIG109	FUTURE NOTIFICATION DEVICES	V
16	1:M14(1)	M14 ISOLATED IDNET DEVICES	Mic
17	1:M14(2)	M14 ISOLATED IDNET DEVICES	Mic
18	1:M14(3)	FUTURE M14 ISOLATED IDNET DEVICES	Mi
19	1:M14(4)	FUTURE M14 ISOLATED IDNET DEVICES	Mi

BAY 3 TERMINATIONS

TERMINATION NUMBER	CIRCUIT LABEL	CKT DESCRIPTION	WIRE
20	1:A1:1(1)	3RD FLR TWR A SOUTHEAST NOTIFICATION	Ac
21	1:A1:2(1)	3RD FLR TWR A NORTHWEST NOTIFICATION	Ac
22	1:A1:2(2)	3RD FLR TWR A NORTHWEST NOTIFICATION	Ac
23	1:A1:3(1)	1ST FLR SC1B EMERGENCY DEPARTMENT	Ac
24	1:A1:3(2)	1ST FLR SC1B EMERG DEPARTMENT ENTRY	Ac

SCOPE OF WORK

NODE-1 FIRE ALARM CONTROL PANEL

CABINET #5 - EXISTING
LOCATED IN
OLD FIRE COMMAND
CENTER 1E-2902A

SCALE: NTS

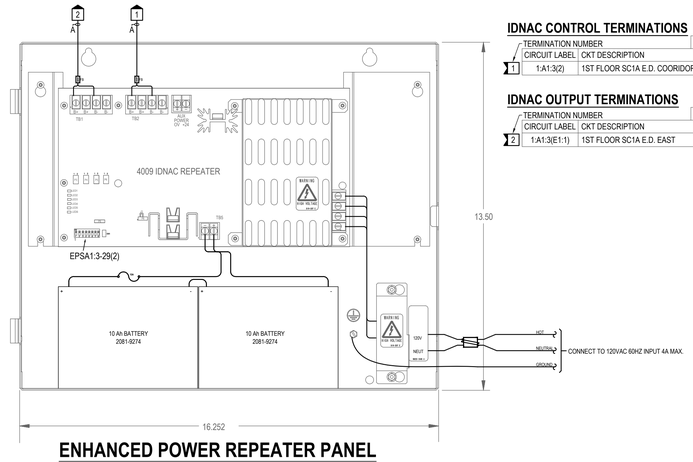

IDNAC CONTROL TERMINATIONS

TERMINATION NUMBER	CIRCUIT LABEL	CKT DESCRIPTION	WIRE
1	1:A1:3(2)	1ST FLOOR SC1A E.D. COORIDOR 0001 EPR#1	A

(E) = FERRITE BEAD

IDNAC OUTPUT TERMINATIONS

TERMINATION NUMBER	CIRCUIT LABEL	CKT DESCRIPTION	WIRE
2	1:A1:3(E1:1)	1ST FLOOR SC1A E.D. EAST	A

(E) = FERRITE BEAD

ENHANCED POWER REPEATER PANEL

LOCATED IN
1ST FL CORR 0001

SCALE: NTS

PANEL TERMINATION NOTES:

GENERAL NOTES:

1. THE INFORMATION OR SYMBOLS SHOWN IN BOLD LINETYPE ARE NEW OR RELOCATED.
2. THE INFORMATION OR SYMBOLS SHOWN IN LIGHT LINETYPE ARE EXISTING TO REMAIN.

City of Aurora Building Division
Reviewed for Code Compliance
Approved as Noted: *Rich Tenorio*
Date: *Oct 11, 2024*
2021 INTERNATIONAL CODES & 2023 NEC

Johnson Controls
DISTRICT: 1-418
14405 E 40TH AVENUE
AURORA, CO 80011
SERVICE: 303-355-6000
PHONE: 303-350-9500
FAX: 303-355-9615

NICET CERTIFICATION INFORMATION

CALE RAUCH
NICET Fire Alarm, III
Certification #151588
Valid Through: 12/01/25

08/20/2024

THE MEDICAL CENTER OF AURORA - SOUTH ED ENTRY AND TRIAGE RENOVATION

THE MEDICAL CENTER OF AURORA - SOUTH
1501 SOUTH POTOMAC STREET
AURORA, COLORADO 80012

Revisions shown with ⚠ symbol

ISSUE LOG MARK	DATE	CAD	CHK	DESCRIPTION

FOR PERMIT

DRAWN BY:	CCD
CHECKED BY:	CBR
ISSUE DATE:	8/14/24
JOB #:	
PROJECT #:	419-650521647

JOHNSON CONTROLS © 2024

SYSTEM:
FIRE ALARM SYSTEM

SHEET:
NODE-1 FIRE ALARM CONRTOL PANEL & 4009 NAC PANEL DETAILS

FA-501

© Johnson Controls 2024. All rights reserved. Reuse, copying, modification or alteration of the drawings and other information contained herein is strictly prohibited.

FILE PATH: C:\Users\jdyson4\OneDrive - Johnson Controls\Medical Center of Aurora\1501 S Potomac - Aurora South\South Tower - Node 1\4.3-1st ED Entry & Triage Reno - 2024 - 650521647\Fire\FA-501.dwg
LAST SAVED BY: JDYSON4
LAST PRINTED: 8/20/2024 11:40:57 AM
36" x 42" Arch E1 Size

MEDICAL CENTER OF AURORA SOUTH TOWER NODE 1 FACP 4100u FACP

Keynote	Module	Qty	Description	Setting	Standby Current	Total Standby	Alarm Current	Total Alarm
	Panel Equipment							
	4100-7150	1	MASTER CONTROLLER UPGRADE W/ 2X40 DISPLAY (4100 BA		0.1630	0.1630	0.2100	0.2100
	4100-6078	1	NETWORK IF CARD, MODULAR		0.0460	0.0460	0.0460	0.0460
	4100-6056	2	NETWORK MEDIA CARD WIRED		0.0550	0.1100	0.0550	0.1100
	4100-0304	1	STYLE 7 REMOTE UNIT INTERFACE		0.0850	0.0850	0.0850	0.0850
	4100-5005	8	ZONE MODULE, 8 IDC, CLASS B		0.0750	0.6000	0.1950	1.5600
	4100-4321	10	6 CIRCUIT CLASS B (STYLE Y)		0.0250	0.2500	0.0700	0.7000
	4100-3003	2	8 PT AUX RELAY MODULE 3 AMP		0.0250	0.0500	0.2800	0.5600
	4100-0110	5	MAPNET II ADDRESSABLE MODULE	*	0.2700	1.3500	0.2900	1.4500
	4100-6005	1	MASTER CONTROLLER POWER SUPPLY		0.0000	0.0000	0.0000	0.0000
	4100-0108	2	EXPANSION 120V 8AMP POWER SUPPLY		0.0000	0.0000	0.0000	0.0000
	4100-6038	1	DUAL RS-232 IF CARD		0.1320	0.1320	0.1320	0.1320
	4100-5101	2	EXPANSION PWR SUPPLY (XPS) - 120VAC 60HZ		0.0500	0.1000	0.0500	0.1000
	4100-3110	3	IDNet2+2 MODULE - UP TO 250 DEVICES 4 ISOLATED LOOPS	*	0.0500	0.1500	0.1000	0.3000
	4100-5325	1	ENHANCED POWER SUPPLY, 3 CHANNELS, 120V		0.1250	0.1250	0.2200	0.2200
	4100-96xx	3	REMOTE ANNUNCIATORS & MINIPLEX TRANSPONDERS	*	RUI CURRENT DRAWS INCLUDED BELOW			
			Panel Totals			3.1610		5.4730
	IDNet Addressable Devices (SLC)							
	4090-9001	7	IDNET SUPERVISED IAM *					
	4090-9002	1	IDNET RELAY IAM *					
	4098-9714	6	TRUEALARM PHOTO SMOKE SENSOR					
	4098-9733	8	TRUEALARM HEAT SENSOR					
	4098-9756	2	TRUEALARM DUCT SMOKE SENSOR W/ RELAY OUTPUT *					
	4098-9789	1	TRUEALARM SENSOR BASE W/ LED OUTPUT *					
	4098-9792	13	TRUEALARM SENSOR BASE *					
	4099-9006	10	ADDRESSABLE DOUBLE ACTION MANUAL STATION, PUSH *					
					Constant current draw of .8mA standby and 1mA alarm per address used. Devices requiring additional current are accounted for in the section labeled "Miscellaneous Peripheral Devices Requiring Additional System Power".			
	Mapnet Addressable Devices (SLC)							
	2190-9155	1	MAPNET CLASS B MONITOR ZAM *					
	2190-9161	6	MAPNET CLASS B SIGNAL ZAM *					
	2190-9163	44	MAPNET UNSUPERVISED CONTROL ZAM *					
	2190-9172	41	MAPNET SUPERVISED IAM *					
	2190-9173	3	MAPNET 2 POINT INPUT/OUTPUT ZAM *					
	2099-9795	**21**	**MAPNET SINGLE ACTION PULL STATION ***					
1	**4098-9714**	**305**	**TRUEALARM PHOTO SMOKE SENSOR**					
	4098-9733	**43**	**TRUEALARM HEAT SENSOR**					
	4098-9756	36	TRUEALARM DUCT SMOKE SENSOR W/ RELAY OUTPUT *					
	4098-9789	**307**	**TRUEALARM SENSOR BASE W/ LED OUTPUT ***					
	4098-9792	41	TRUEALARM SENSOR BASE *					
	4090-9008	3	ADDRESSABLE DUAL CONTACT RELAY IAM *					
	Miscellaneous Peripheral Devices That Require (Additional) System Power							
	4098-9843	38	ENCAPSULATED RELAY PAM-SD		0.0000	0.0000	0.0150	0.5700
	4098-9756	38	TRUEALARM DUCT SMOKE SENSOR W/ RELAY OUTPUT		0.0030	0.1140	0.0150	0.5700
	4603-9101	13	SERIAL LCD ANNUNCIATOR		0.0650	0.8450	0.1400	1.8200
	2098-9808	26	REMOTE ALARM INDICATOR		0.0010	0.0260	0.0000	0.0000
	2098-9806	54	REMOTE TEST STATION W/ LED AND KEY SWITCH		0.0000	0.0000	0.0000	0.0000
	2190-9155	1	MAPNET CLASS B MONITOR ZAM		0.0200	0.0200	0.0900	0.0900
	2190-9163	45	MAPNET UNSUPERVISED CONTROL ZAM		0.0100	0.4500	0.0400	1.8000
	2190-9161	6	MAPNET CLASS B SIGNAL ZAM		0.0150	0.0900	0.0400	0.2400
	2088-9021	1	ENCAPSULATED RELAY PAM-1		0.0000	0.0000	0.0150	0.0150
	Notification Appliances			Setting				
	4009-9001	2	FOUR CIRCUIT NAC EXTENDER, 120 VAC		0.0000	0.0000	0.0150	0.0300
	4903-9219	10	HORN/STROBE, NON-SYNC, RED, WALL MTD	15	0.0000	0.0000	0.0220	0.2200
1	**4903-9292**	**90**	**CH70-2415W-FR,CHIME/STROBE, NON-SYNC,RED, WALL MTD**	**15**	**0.0000**	**0.0000**	**0.0700**	**6.3000**
1	**4904-9137**	**105**	**15CD VISIBLE ONLY RED**	**15**	**0.0000**	**0.0000**	**0.0900**	**9.4500**
	4906-9101	1	V/O MC NON-ADDRESS, RED, WALL	15	0.0000	0.0000	0.0600	0.0600
	4906-9101	5	V/O MC NON-ADDRESS, RED, WALL	75	0.0000	0.0000	0.1860	0.9300
	CH70-241575W-FR (C)	1	CHIME, NON-SYNC,RED, WALL MTD	CHIME	0.0000	0.0000	0.0220	0.0220
	CH70-24MCW-FR	4	MULTI CD CHIME STROBE, WALL MNT, RED	15	0.0000	0.0000	0.0820	0.3280
	RSS-24MCW-FR	1	MULTI CD STROBE, WALL MNT, RED	15	0.0000	0.0000	0.0600	0.0600
	IDNac Notification Appliances			Setting				
	4905-9929	1	TRUEALERT ISOLATOR MODULE		0.0032	0.0032	0.0100	0.0100
	49MTV-WRF	23	MULTI-TONE A/V, RED, WALL MOUNT	15	0.0016	0.0368	0.1450	3.3350
	49MTV-WRF	1	MULTI-TONE A/V, RED, WALL MOUNT	185	0.0016	0.0016	0.2990	0.2990
	49MTV-WRF	3	MULTI-TONE A/V, RED, WALL MOUNT	30	0.0016	0.0048	0.1630	0.4890
	49VO-APPLC	20	STROBE, APPLIANCE ONLY, CEILING MOUNT	15	0.0008	0.0160	0.0550	1.1000
	49VO-APPLC	1	STROBE, APPLIANCE ONLY, CEILING MOUNT	30	0.0008	0.0008	0.0830	0.0830
	49VO-WRFO	2	VO, WALL MT, RED, FIRE LABEL, WEATHERPROOF	15	0.0008	0.0016	0.0600	0.1200
	49VO-WRF	1	VO, WALL MT, RED, FIRE LABEL	15	0.0008	0.0008	0.0470	0.0470
			Total IDNac Device Current:			0.0656		5.4830
			IDNac Current Boost for 29vdc Regulated Output **					3.1260
			Peripheral Totals			1.5450		31.1140
			RUI Totals	16		0.0560		0.0560
			Address Totals	560.5	Addresses	0.9223		0.9291
			System Totals*:		Standby	5.7499	Alarm	37.5721

* Device Address current draw included below (See Additional Current Draws):
1. 2-wire detector alarm current is included in the alarm current of the Initiating Device Circuit.

Battery Set #1 (Cabinet/Charger #1)			Standby Current	Standby Total	Alarm Current	Alarm Total
Select ALL Power Supplies on this battery set:						
PS-1				1.3150		6.9520
PS-2				1.0530		11.2040
PS-3				1.9310		8.9410
XPS-1				0.1560		0.5110
XPS-2				0.1000		0.1500
EPS-1				0.2166		5.7030
			Sub Total	4.7716		33.4610
Additional Current Draws:						
RUI Connected Peripheral Devices		16	x 0.0035	= 0.0560	x 0.0035	= 0.0560
MAPNET/IDNet Device Address Communication Current		561	x 0.001645	= 0.9223	x 0.001658	= 0.9291
			Sub Total	5.7499		37.5721
Spare addressable point capacity	20%	113	x 0.001645	= 0.1859	x 0.001658	= 0.1873
			Total	5.9358		37.7594
Standby Time =	4	Hrs	x 5.9358	= 23.7431	Standby Ah	
Alarm Time =	5	Min	0.08333 x 37.7594	= 3.1466	Alarm Ah	
				26.8897		
Additional Spare Battery Capacity =	20%		+	5.3779		
				32.2677		
Battery Discharge Factor =	25%		+	8.0669		
Minimum Battery Required	2081-9296 50AH (2x)			40.3346		
Battery Supplied	2081-9296 50AH (2x)					

* System Totals represent total system current requirements. Those currents may be distributed between multiple battery sets or power supplies as shown above.

MAPNET CHANNEL 1:M3

Keynote	Address	Device Type	Point Type	Location Description	1	2	3	4	5	6	7	8		9
	1:M3-1	ADRPUL	PULL	1:M3-1 FLR 1E - EXIT BY PHARMACY	X								ON	
	1:M3-2	ADRPUL	PULL	1:M3-2 FLR 1E - E.D. DECK ELEC. RM		X							ON	
	1:M3-3			SPARE	X	X							ON	
	1:M3-4			SPARE			X						ON	
1	**1:M3-5**			**SPARE**	X		X						ON	
	1:M3-6	ADRPUL	PULL	1:M3-6 FLR 1E - EXIT BY E.D. WAITING RM		X	X						ON	
	1:M3-7			SPARE	X	X	X						ON	
	1:M3-8	RZAM	RELAY	1:M3-8 1ST FL ELEVATOR #5 WON DOOR				X					ON	
1	**1:M3-9**			**SPARE**	X			X					ON	
	1:M3-10	RZAM	RRELAY	1:M3-10 1ST FL CONTROL FOR AUTO DOORS		X		X					ON	
	1:M3-11	GENIAM	SO	1:M3-11 FLR 1E-ER GLYCOL LOOP IN CEILING	X	X		X					ON	
1	**1:M3-12**			**SPARE**			X	X					ON	
	1:M3-13	GENIAM	SO	1:M3-13 BSMT ELEV 5 SHAFT TAMPER SWITCH	X		X	X					ON	
	1:M3-14			SPARE		X	X	X					ON	
	1:M3-15	PHOTO	VSMOKE	1:M3-15 FLR 1W - HALL BY LAB	X	X	X	X					ON	
	1:M3-16			SPARE					X				ON	
2	**1:M3-17**	**HEAT**	**HEAT**	**1:M3-17 FLR 1E - WAITING RESULTS INTERIM**	X				X				ON	
	1:M3-18	PHOTO	VSMOKE	1:M3-18 FLR 1W - HALL BY LAB		X			X				ON	
	1:M3-19	PHOTO	VSMOKE	1:M3-19 FLR 1W - HALL BY PHARMACY	X	X			X				ON	
	1:M3-20	PHOTO	VSMOKE	1:M3-20 FLR 1W - HALL BY PHARMACY			X		X				ON	
	1:M3-21	PHOTO	VSMOKE	1:M3-21 FLR 1W - HALL BY PHARMACY	X		X		X				ON	
	1:M3-22			SPARE		X	X		X				ON	
	1:M3-23			SPARE	X	X	X		X				ON	
	1:M3-24	PHOTO	VSMOKE	1:M3-19 FLR 1W - HALL BY PHARMACY				X	X				ON	
	1:M3-25	PHOTO	VSMOKE	1:M3-25 FLR 1E - HALL BY PHARMACY	X			X	X				ON	
	1:M3-26	PHOTO	VSMOKE	1:M3-26 FLR 1E - EXIT HALL BY PHARMACY		X		X	X				ON	
	1:M3-27	PHOTO	VSMOKE	1:M3-27 FLR 1E - EXIT HALL BY PHARMACY	X	X		X	X				ON	
	1:M3-28	PHOTO	VSMOKE	1:M3-28 FLR 1E - EXIT HALL BY PHARMACY			X	X	X				ON	
	1:M3-29	PHOTO	VSMOKE	1:M3-29 FLR 1E - EXIT HALL BY PHARMACY	X		X	X	X				ON	
	1:M3-30	PHOTO	VSMOKE	1:M3-30 FLR 1E - E.D. - WEST ENTRANCE		X	X	X	X				ON	
	1:M3-31	PHOTO	VSMOKE	1:M3-31 FLR 1E - E.D. - BY EXAM RM 6	X	X	X	X	X				ON	
	1:M3-32	PHOTO	VSMOKE	1:M3-32 FLR 1E - E.D. - O/S FAM CON 5310						X			ON	
	1:M3-33	PHOTO	VSMOKE	1:M3-33 FLR 1E - E.D. - BY EXAM RM7	X					X			ON	
	1:M3-34	PHOTO	VSMOKE	1:M3-34 FLR 1E - E.D. BY NURSE STATION		X				X			ON	
	1:M3-35	PHOTO	VSMOKE	1:M3-35 FLR 1E - E.D. BY TRAUMA 1-5324	X	X				X			ON	
	1:M3-36			SPARE			X			X			ON	
	1:M3-37	PHOTO	VSMOKE	1:M3-37 FLR 1E - E.D. HALL BY RM 20	X		X			X			ON	
	1:M3-38	PHOTO	VSMOKE	1:M3-38 FLR 1E - E.D. HALL BY RM 15		X	X			X			ON	
	1:M3-39	PHOTO	VSMOKE	1:M3-39 FLR 1E - E.D. HALL BY RM 17	X	X	X			X			ON	
	1:M3-40	PHOTO	VSMOKE	1:M3-40 FLR 1E - E.D. HALL BY RM 19				X		X			ON	
	1:M3-41	PHOTO	VSMOKE	1:M3-41 FLR 1E - E.D. HALL BY RM 32	X			X		X			ON	
	1:M3-42	PHOTO	VSMOKE	1:M3-42 FLR 1E - E.D. HALL BY RM 28		X		X		X			ON	
	1:M3-43	PHOTO	VSMOKE	1:M3-43 FLR 1E - E.D. HALL BY RM 24	X	X		X		X			ON	
	1:M3-44	PHOTO	VSMOKE	1:M3-44 FLR 1E - E.D. HALL BY RM 25			X	X		X			ON	
	1:M3-45	PHOTO	VSMOKE	1:M3-45 FLR 1E - E.D. HALL BY RM 25	X		X	X		X			ON	
	1:M3-46	PHOTO	VSMOKE	1:M3-46 FLR 1E - E.D. ELEC RM 1E-5902A		X	X	X		X			ON	
	1:M3-47	ADRPUL	PULL	1:M3-47 FLR 1E - E.D. EAST ENTRY	X	X	X	X		X			ON	
	1:M3-48	PHOTO	VSMOKE	1:M3-48 FLR 1E - E.D. BY NURSE STATION					X	X			ON	
	1:M3-49	PHOTO	VSMOKE	1:M3-49 FLR 1E - E.D. BY EXAM RM 10	X				X	X			ON	
	1:M3-50	PHOTO	VSMOKE	1:M3-50 FLR 1E - E.D. BY ALCOVE 5329		X			X	X			ON	
	1:M3-51	PHOTO	VSMOKE	1:M3-51 FLR 1E - E.D. BY TRAUMA 3-5321	X	X			X	X			ON	
	1:M3-52	PHOTO	VSMOKE	1:M3-52 FLR 1E - E.D. BY EXAM RM 11			X		X	X			ON	
	1:M3-53	PHOTO	VSMOKE	1:M3-53 FLR 1E - E.D. HALL BY RM 43	X		X		X	X			ON	
	1:M3-54	PHOTO	VSMOKE	1:M3-54 FLR 1E - E.D. HALL BY RM 43		X	X		X	X			ON	
1	**1:M3-55**			**SPARE**	X	X	X		X	X			ON	
2	**1:M3-56**	**HEAT**	**HEAT**	**1:M3-56 FLR 1E-E.D. HALL @ RM 26 INTERIM**				X	X	X			ON	
	1:M3-57	PHOTO	VSMOKE	1:M3-57 FLR 1E - E.D. HALL BY RM 26	X			X	X	X			ON	
	1:M3-58	PHOTO	VSMOKE	1:M3-58 FLR 1E - E.D. - BY TRIAGE DESK		X		X	X	X			ON	
1	**1:M3-59**			**SPARE**	X	X		X	X	X			ON	
2	**1:M3-60**	**HEAT**	**HEAT**	**1:M3-60 FLR 1E - E.D. TRIAGE INTERIM**			X	X	X	X			ON	
2	**1:M3-61**	**HEAT**	**HEAT**	**1:M3-61 FLR 1E - E.D. WAITING RM INTERIM**	X		X	X	X	X			ON	
2	**1:M3-62**	**HEAT**	**HEAT**	**1:M3-62 FLR 1E - E.D. WAITING RM INTERIM**		X	X	X	X	X			ON	
2	**1:M3-63**	**HEAT**	**HEAT**	**1:M3-63 FLR 1E - E.D. WAITING RM INTERIM**	X	X	X	X	X	X			ON	
2	**1:M3-64**	**HEAT**	**HEAT**	**1:M3-64 FLR 1E - E.D. TRIAGE INTERIM**							X		ON	
2	**1:M3-65**	**HEAT**	**HEAT**	**1:M3-65 FLR 1E - E.D. TRIAGE INTERIM**	X						X		ON	
2	**1:M3-66**	**HEAT**	**HEAT**	**1:M3-66 FLR 1E - E.D. BY RM 37 INTERIM**		X					X		ON	
1	**1:M3-67**			**SPARE**	X	X					X		ON	
2	**1:M3-68**	**HEAT**	**HEAT**	**1:M3-68 FLR 1E - E.D. BY RM 40 INTERIM**			X				X		ON	
	1:M3-69	PHOTO	VSMOKE	1:M3-69 FLR 1E - HALL BY E.D. ON-CALL RM	X		X				X		ON	
	1:M3-70	PHOTO	VSMOKE	1:M3-70 FLR 1E - HALL BY E.D. ON-CALL RM		X	X				X		ON	
	1:M3-71	PHOTO	VSMOKE	1:M3-71 FLR 1E - E.D. HALL BY RM 48	X	X	X				X		ON	
	1:M3-72	PHOTO	VSMOKE	1:M3-72 FLR 1E - E.D. HALL BY RM 44				X			X		ON	
	1:M3-73	PHOTO	VSMOKE	1:M3-73 FLR 1E - E.D. HALL 02 BY RM 54	X			X			X		ON	
	1:M3-74	PHOTO	VSMOKE	1:M3-74 FLR 1E - E.D. HALL 02 BY RM 51		X		X			X		ON	
	1:M3-75	PHOTO	VSMOKE	1:M3-75 FLR 1E - E.D. ADMIN OFFICES	X	X		X			X		ON	
	1:M3-76	PHOTO	VSMOKE	1:M3-76 FLR 1E - HALL BEHIND E.D.			X	X			X		ON	
	1:M3-77	PHOTO	VSMOKE	1:M3-77 FLR 1E - HALL BY E.D. ON-CALL RM	X		X	X			X		ON	
	1:M3-78	PHOTO	VSMOKE	1:M3-78 FLR 1E - HALL BY E.D. ON-CALL RM		X	X	X			X		ON	
	1:M3-79	PHOTO	VSMOKE	1:M3-79 FLR 1E - E.D. SPECIALITY ON-CALL	X	X	X	X			X		ON	
	1:M3-80	PHOTO	VSMOKE	1:M3-80 FLR 1E - HALL BY E.D. ON-CALL RM					X		X		ON	
	1:M3-81	PHOTO	VSMOKE	1:M3-81 FLR 1E - HALL BY E.D. ON-CALL RM	X				X		X		ON	
	1:M3-82	PHOTO	VSMOKE	1:M3-82 FLR 1E - HALL BY E.D. ON-CALL RM		X			X		X		ON	
	1:M3-83	PHOTO	VSMOKE	1:M3-83 FLR 1E - IN THE E.D. ON-CALL RM	X	X			X		X		ON	
	1:M3-84	PHOTO	VSMOKE	1:M3-84 FLR 1E - HALL BATH BY E.D. ADMIN			X		X		X		ON	
	1:M3-85	PHOTO	VSMOKE	1:M3-85 FLR 1E - BACK HALL BY QUIET RM	X		X		X		X		ON	
	1:M3-86	PHOTO	VSMOKE	1:M3-86 FLR 1E - HALL BY MEDICAL LIBRARY		X	X		X		X		ON	
1	**1:M3-87**			**SPARE**	X	X	X		X		X		ON	
1	**1:M3-88**			**SPARE**				X	X		X		ON	
	1:M3-89	PHOTO	VSMOKE	1:M3-89 FLR 1E - HALL BY PACU	X			X	X		X		ON	
	1:M3-90	PHOTO	VSMOKE	1:M3-90 FLR 1E - HALL BY PACU		X		X	X		X		ON	
1	**1:M3-91**			**SPARE**	X	X		X	X		X		ON	
1	**1:M3-92**			**SPARE**			X	X	X		X		ON	
	1:M3-93	PHOTO	VSMOKE	1:M3-93 FLR 1E - HALL BY PACU	X		X	X	X		X		ON	
	1:M3-94	PHOTO	VSMOKE	1:M3-94 FLR 1E - HALL BY PACU		X	X	X	X		X		ON	
	1:M3-95	PHOTO	VSMOKE	1:M3-95 FLR 1E - HALL BY PACU	X	X	X	X	X		X		ON	
	1:M3-96	PHOTO	VSMOKE	1:M3-96 FLR 1E - HALL BY PACU						X	X		ON	
	1:M3-97	PHOTO	VSMOKE	1:M3-97 FLR 1E - HALL BY E.D. STAIRWELL	X					X	X		ON	
	1:M3-98	PHOTO	VSMOKE	1:M3-98 FLR 1E - HALL BY E.D. STAIRWELL		X				X	X		ON	
	1:M3-99	PHOTO	VSMOKE	1:M3-99 FLR 1E - HALL BY E.D. STAIRWELL	X	X				X	X		ON	
	1:M3-100	PHOTO	VSMOKE	1:M3-100 FLR 1E - EMS LOUNGE			X			X	X		ON	
2	**1:M3-101**	**HEAT**	**HEAT**	**1:M3-101 FLR 1E - E.D. BY TRIAGE INTERIM**	X		X			X	X		ON	
	1:M3-102	PHOTO	VSMOKE	1:M3-102 FLR 1E - E.D. HALL BY RM 13		X	X			X	X		ON	
	1:M3-103	PHOTO	VSMOKE	1:M3-103 FLR 1W - PHARMACY	X	X	X			X	X		ON	
	1:M3-104	PHOTO	VSMOKE	1:M3-104 FLR 1W - PHARMACY				X		X	X		ON	
	1:M3-105	PHOTO	VSMOKE	1:M3-105 FLR 1W - PHARMACY	X			X		X	X		ON	
	1:M3-106	PHOTO	VSMOKE	1:M3-106 FLR 1W - PHARMACY ANTE ROOM		X		X		X	X		ON	
	1:M3-107	PHOTO	VSMOKE	1:M3-107 FLR 1W - PHARMACY MEETING ROOM	X	X		X		X	X		ON	
	1:M3-108	GENIAM	UTILITY	1:M3-108 FLR 1E - E.D. SPARE MON 2 PT IO			X	X		X	X		ON	
	1:M3-109	RZAM	RRELAY	1:M3-109 FLR 1E - E.D. DOOR RELEASE	X		X	X		X	X		ON	
	1:M3-110	PHOTO	VSMOKE	1:M3-110 FL CTL TWR E OUTSIDE EMS LOUNGE		X	X	X		X	X		ON	
	1:M3-111	PHOTO	VSMOKE	1:M3-111 FL CTL TWR E HALL BY EMS LOUNGE	X	X	X	X		X	X		ON	
	1:M3-112			SPARE					X	X	X		ON	
	1:M3-113			SPARE	X				X	X	X		ON	
	1:M3-114	PHOTO	VSMOKE	1:M3-114 FLR 1E - E.D. NURSE 5200		X			X	X	X		ON	
	1:M3-115	PHOTO	VSMOKE	1:M3-115 FLR 1E - E.D. SECURE HOLDING 52	X	X			X	X	X		ON	
	1:M3-116	PHOTO	VSMOKE	1:M3-116 FLR 1E - E.D. SECURE HOLDING 51			X		X	X	X		ON	
	1:M3-117	RZAM	RELAY	1:M3-117 FLR 1E - E.D. HALL DR RELEASE E	X		X		X	X	X		ON	
	1:M3-118	RZAM	RELAY	1:M3-118 FLR 1E - E.D. NURSE DR RELEASE		X	X		X	X	X		ON	
	1:M3-119	RZAM	RELAY	1:M3-119 FLR 1E - E.D. HALL DR RELEASE W	X	X	X		X	X	X		ON	
	1:M3-120			SPARE				X	X	X	X		ON	
	1:M3-121			SPARE	X			X	X	X	X		ON	
	1:M3-122			SPARE		X		X	X	X	X		ON	
	1:M3-123			SPARE	X	X		X	X	X	X		ON	
	1:M3-124			SPARE			X	X	X	X	X		ON	
	1:M3-125			SPARE	X		X	X	X	X	X		ON	
	1:M3-126			SPARE		X	X	X	X	X	X		ON	
	1:M3-127			SPARE	X	X	X	X	X	X	X		ON	

NOTE: THE LABELS SHOWN ABOVE WILL BE USED FOR PROGRAMMING PURPOSES.
THE LABELS ARE BASED UPON INFORMATION SHOWN ON THE ARCHITECTURAL DRAWINGS.
ANY CHANGES TO THESE LABELS MUST BE NOTED ON THE SUBMITTAL REVIEW, PRIOR TO PROGRAMMING.
POINTS SHOWN IN ITALIC TEXT REFER TO EXISTING DEVICES.

PANEL CALCULATIONS NOTES:

1. THE INFORMATION OR SYMBOLS SHOWN IN BOLD LINETYPE ARE NEW OR RELOCATED.
2. THE INFORMATION OR SYMBOLS SHOWN IN LIGHT LINETYPE ARE EXISTING TO REMAIN.

KEYNOTES:

1. DEVICE(S) REMOVED FROM CIRCUIT. DEVICE QUANTITY CHANGED.
2. INTERIM HEAT DETECTOR.TO BE REMOVED AND REPLACED WITH EXISTING SMOKE DETECTOR AFTER CONSTRUCTION.

City of Aurora Building Division
Reviewed for Code Compliance
Approved as Noted: Rich Tenorio
Date: Oct 11, 2024
2021 INTERNATIONAL CODES & 2023 NEC

Johnson Controls
DISTRICT - 419
14200 E. EXPOSITION AVE
AURORA, CO 80012
SERVICE: 303-355-0500
PHONE: 303-355-0500
FAX: 303-355-0615

NICET CERTIFICATION INFORMATION
CALE RAUCH
NICET Fire Alarm, III
Certification #151588
Valid Through: 12/01/25
08/20/2024

THE MEDICAL CENTER OF AURORA - SOUTH ED ENTRY AND TRIAGE RENOVATION

THE MEDICAL CENTER OF AURORA - SOUTH
1501 SOUTH POTOMAC STREET
AURORA, COLORADO 80012

Revisions shown with symbol

ISSUE LOG:

MARK	DATE	CAD	CHK	DESCRIPTION

FOR PERMIT

DRAWN BY:	CCD
CHECKED BY:	CBR
ISSUE DATE:	8/14/24
JOB #:	
PROJECT #:	419:650521647

JOHNSON CONTROLS © 2024

SYSTEM: FIRE ALARM SYSTEM

SHEET: NODE-1 4100U FACP CALCULATIONS AND SCHEDULES INTERIM

FA-601

FILE PATH: C:\Users\jdixonc4\OneDrive - Johnson Controls\Medical Center of Aurora\1501 S Potomac - Aurora South\South Tower - Node 1\43-1st ED Entry & Triage Reno - 2024 - 650521647\Fire\FA-601.dwg
LAST SAVED BY: JDIXONC4
LAST PRINTED: 8/20/2024 11:41:00 AM
30" x 42" - Arch E1 Size

© Johnson Controls 2024. All rights reserved. Reuse, copying, modification or alteration of the drawings and other information contained herein is strictly prohibited.

PANEL CALCULATIONS NOTES:

1. THE INFORMATION OR SYMBOLS SHOWN IN BOLD LINETYPE ARE NEW OR RELOCATED.
2. THE INFORMATION OR SYMBOLS SHOWN IN LIGHT LINETYPE ARE EXISTING TO REMAIN.

KEYNOTES:

1. DEVICE(S) REMOVED FROM CIRCUIT. DEVICE QUANTITY CHANGED.
2. INTERIM HEAT DETECTOR.TO BE REMOVED AND REPLACED WITH EXISTING SMOKE DETECTOR AFTER CONSTRUCTION.

City of Aurora Building Division
Reviewed for Code Compliance
Approved as Noted: *Rich Tenorio*
Date: *Oct 11, 2024*
2021 INTERNATIONAL CODES & 2023 NEC

MEDICAL CENTER OF AURORA SOUTH TOWER NODE 1 FACP 4100u FACP VOLTAGE DROPS

WIRE RESISTANCE BASED ON TABLE 8 FROM NATIONAL ELECTRICAL CODE (UNCOATED SOLID COPPER WIRE) @ 75 Celsius

													PID	4903-9219	1 4903-9292	1 4904-9137	CH70-24MCW-FR	RSS-24MCW-FR	4906-9101	4906-9101	4009-9001	CH70-24157SW-FR (V)	CH70-24157SW-FR (C)	4906-9105						
													Setting	15cd	15cd	15cd	15cd	15cd	15cd	75cd		15cd	CHIME	15cd						
													Device Type	A/V	C/V	V/O	MC A/V	MC V/O	MC V/O	MC V/O		V/O	C/O	WP V/O						
													Supv. Current	0.0000	0.0000	0.0000	0.0000	0.0000	0.0000	0.0000	0.0000	0.0000	0.0000	0.0000						
													Alarm Current	0.0220	0.0700	0.0900	0.0820	0.0600	0.0600	0.1860	0.0150	0.0410	0.0220	0.0770						
													Alarm Current @ 23 Volts	0.0220	0.0700	0.0900	0.0820	0.0600	0.0600	0.1860	0.0150	0.0410	0.0220	0.0770						
NOTIFICATION CIRCUIT DESCRIPTION	Power Supply	Panel Circuit	Plan Ckt.	Dist. (D) Feet	Wire Gauge	Wire Res. / Ft. (R)	Total Alarm (A)	V. Drop (A*2D*R)	Volt @ End	% Volt Drop	29V Boost Current	Min Device Voltage	Max Distance														Circuit Capacity (Amps)	Minimum Voltage @ NAC Output Terminals	Spare Circuit / Branch Capacity	Device Quantity Per Circuit/ Branch
1ST FLOOR EAST CHIMES/STROBES N1:SIG3	*PS-1*	*SIG3*	*1:SIG3*	*500*	*14ga*	*0.0031*	**0.450**	*1.382*	*18.119*	*7.08%*	*0.0000*	*16vdc*	*1267 Ft.*			5										*3.A*	*19.5*	*60.5%*	*5*
RADIOLOGY/SURGERY HALLS N1:SIG4	*PS-1*	*SIG4*	*1:SIG4*	*500*	*14ga*	*0.0031*	**0.450**	*1.382*	*18.119*	*7.08%*	*0.0000*	*16vdc*	*1267 Ft.*			5										*3.A*	*19.5*	*60.5%*	*5*
2ND FLOOR CHIMES/STROBES N1:SIG5	*PS-1*	*SIG5*	*1:SIG5*	*600*	*14ga*	*0.0031*	**0.450**	*1.658*	*17.842*	*8.50%*	*0.0000*	*16vdc*	*1267 Ft.*			5										*3.A*	*19.5*	*52.6%*	*5*
3RD FLOOR CHIMES/STROBES N1:SIG6	*PS-1*	*SIG6*	*1:SIG6*	*700*	*14ga*	*0.0031*	**0.450**	*1.934*	*17.566*	*9.92%*	*0.0000*	*16vdc*	*1267 Ft.*			5										*3.A*	*19.5*	*44.7%*	*5*
4TH FLOOR CHIMES/STROBES N1:SIG7	*PS-1*	*SIG7*	*1:SIG7*	*800*	*14ga*	*0.0031*	**0.450**	*2.210*	*17.290*	*11.34%*	*0.0000*	*16vdc*	*1267 Ft.*			5										*3.A*	*19.5*	*36.8%*	*5*
5TH FLOOR CHIMES/STROBES N1:SIG8	*PS-1*	*SIG8*	*1:SIG8*	*900*	*14ga*	*0.0031*	**0.450**	*2.487*	*17.013*	*12.75%*	*0.0000*	*16vdc*	*1267 Ft.*			5										*3.A*	*19.5*	*29.0%*	*5*
SURGERY CHIMES/STROBES N1:SIG9	*PS-1*	*SIG9*	*1:SIG9*	*500*	*14ga*	*0.0031*	**0.450**	*1.382*	*18.119*	*7.08%*	*0.0000*	*16vdc*	*1267 Ft.*			5										*3.A*	*19.5*	*60.5%*	*5*
LAB HALL CHIMES/STROBES N1:SIG10	*PS-1*	*SIG10*	*1:SIG10*	*500*	*14ga*	*0.0031*	**0.450**	*1.382*	*18.119*	*7.08%*	*0.0000*	*16vdc*	*1267 Ft.*			5										*3.A*	*19.5*	*60.5%*	*5*
CENT SPLY/MATERIALS MGMT N1:SIG11	*PS-1*	*SIG11*	*1:SIG11*	*500*	*14ga*	*0.0031*	**0.450**	*1.382*	*18.119*	*7.08%*	*0.0000*	*16vdc*	*1267 Ft.*			5										*3.A*	*19.5*	*60.5%*	*5*
EMERGENCY ROOM STROBES N1:SIG12	*PS-1*	*SIG12*	*1:SIG12*	*0*	*14ga*	*0.0031*	*0.000*	*0.000*	*19.500*	*0.00%*	*0.0000*	*16vdc*	*0 Ft.*													*3.A*	*19.5*	*100.0%*	*0*
EMERGENCY RM HALL STROBES N1:SIG13	*PS-1*	*SIG13*	*1:SIG13*	*500*	*14ga*	*0.0031*	**0.450**	*1.382*	*18.119*	*7.08%*	*0.0000*	*16vdc*	*1267 Ft.*			5										*3.A*	*19.5*	*60.5%*	*5*
1ST FLOOR CENTRAL STROBES N1:SIG14	*PS-1*	*SIG14*	*1:SIG14*	*500*	*14ga*	*0.0031*	**0.450**	*1.382*	*18.119*	*7.08%*	*0.0000*	*16vdc*	*1267 Ft.*			5										*3.A*	*19.5*	*60.5%*	*5*
N1:SIG15 CENT SPLY/MATERIAL CHIME	*PS-2*	*SIG15*	*1:SIG15*	*500*	*14ga*	*0.0031*	**0.350**	*1.075*	*18.426*	*5.51%*	*0.0000*	*16vdc*	*1629 Ft.*		*5*											*3.A*	*19.5*	*69.3%*	*5*
N1:SIG16 EMERGENCY ROOM CHIMES	*PS-2*	*SIG16*	*1:SIG16*	*500*	*14ga*	*0.0031*	**0.350**	*1.075*	*18.426*	*5.51%*	*0.0000*	*16vdc*	*1629 Ft.*		*5*											*3.A*	*19.5*	*69.3%*	*5*
N1:SIG17 EMERGENCY RM HALL CHIMES	*PS-2*	*SIG17*	*1:SIG17*	*500*	*14ga*	*0.0031*	**0.350**	*1.075*	*18.426*	*5.51%*	*0.0000*	*16vdc*	*1629 Ft.*		*5*											*3.A*	*19.5*	*69.3%*	*5*
N1:SIG18 1ST FLOOR CENTRAL CHIMES	*PS-2*	*SIG18*	*1:SIG18*	*500*	*14ga*	*0.0031*	**0.350**	*1.075*	*18.426*	*5.51%*	*0.0000*	*16vdc*	*1629 Ft.*		*5*											*3.A*	*19.5*	*69.3%*	*5*
N1:SIG19 CHIMES C5-1	*PS-2*	*SIG19*	*1:SIG19*	*1000*	*14ga*	*0.0031*	**0.350**	*2.149*	*17.351*	*11.02%*	*0.0000*	*16vdc*	*1629 Ft.*		*5*											*3.A*	*19.5*	*38.6%*	*5*
N1:SIG20 CHIMES C5-1, S6-5, S6-6	*PS-2*	*SIG20*	*1:SIG20*	*827*	*14ga*	*0.0031*	**0.340**	*1.726*	*17.774*	*8.85%*	*0.0000*	*16vdc*	*1677 Ft.*		*1*	*3*										*3.A*	*19.5*	*50.7%*	*4*
N1:SIG21 STROBES S6-1	*PS-2*	*SIG21*	*1:SIG21*	*1000*	*14ga*	*0.0031*	**0.450**	*2.763*	*16.737*	*14.17%*	*0.0000*	*16vdc*	*1267 Ft.*			*5*										*3.A*	*19.5*	*21.1%*	*5*
N1:SIG22 STROBES S6-2	*PS-2*	*SIG22*	*1:SIG22*	*1000*	*14ga*	*0.0031*	**0.450**	*2.763*	*16.737*	*14.17%*	*0.0000*	*16vdc*	*1267 Ft.*			*5*										*3.A*	*19.5*	*21.1%*	*5*
N1:SIG23 CHIMES C3,4-1	*PS-2*	*SIG23*	*1:SIG23*	*700*	*14ga*	*0.0031*	**0.372**	*1.599*	*17.901*	*8.20%*	*0.0000*	*16vdc*	*1532 Ft.*							*2*						*3.A*	*19.5*	*54.3%*	*2*
N1:SIG24 STROBES S3-1	*PS-2*	*SIG24*	*1:SIG24*	*700*	*14ga*	*0.0031*	**0.360**	*1.547*	*17.953*	*7.93%*	*0.0000*	*16vdc*	*1583 Ft.*			*4*										*3.A*	*19.5*	*55.8%*	*4*
N1:SIG25 STROBES S3-2	*PS-2*	*SIG25*	*1:SIG25*	*0*	*14ga*	*0.0031*	*0.000*	*0.000*	*19.500*	*0.00%*	*0.0000*	*16vdc*	*0 Ft.*		*0*	*0*										*3.A*	*19.5*	*100.0%*	*0*
N1:SIG26 CHIME C2-1	**PS-2**	**SIG26**	**1:SIG26**	**470**	**14ga**	**0.0031**	**0.490**	**1.414**	**18.086**	**7.25%**	**0.0000**	**16vdc**	**1163 Ft.**		**7**											**3.A**	**19.5**	**59.6%**	**7**
N1:SIG27 SPARE	*PS-2*	*SIG27*	*1:SIG27*	*0*	*14ga*	*0.0031*	*0.000*	*0.000*	*19.500*	*0.00%*	*0.0000*	*16vdc*	*0 Ft.*													*3.A*	*19.5*	*100.0%*	*0*
N1:SIG28 STROBES SP6-2	*PS-2*	*SIG28*	*1:SIG28*	*600*	*14ga*	*0.0031*	**0.450**	*1.658*	*17.842*	*8.50%*	*0.0000*	*16vdc*	*1267 Ft.*			*5*										*3.A*	*19.5*	*52.6%*	*5*
N1:SIG29 4009 SP6-2,S2-4,1ST CENT ELEV#6	**PS-2**	**SIG29**	**1:SIG29**	**325**	**14ga**	**0.0031**	**0.425**	**0.848**	**18.652**	**4.35%**	**0.0000**	**16vdc**	**1341 Ft.**		**2**	**3**						*1*				**3.A**	**19.5**	**75.8%**	**6**
N1:SIG30,STROBES 4V20A SOUTH PHARMACY	*PS-2*	*SIG30*	*1:SIG30*	*350*	*14ga*	*0.0031*	**0.015**	*0.032*	*19.468*	*0.17%*	*0.0000*	*16vdc*	*38002 Ft.*									*1*				*3.A*	*19.5*	*99.1%*	*1*
N1:SIG31 SPARE S5-2	*PS-2*	*SIG31*	*1:SIG31*	*0*	*14ga*	*0.0031*	*0.000*	*0.000*	*19.500*	*0.00%*	*0.0000*	*16vdc*	*0 Ft.*													*3.A*	*19.5*	*100.0%*	*0*
N1:SIG32 ELECTRICAL 1E-4902B STROBE	*PS-2*	*SIG32*	*1:SIG32*	*350*	*14ga*	*0.0031*	**0.060**	*0.129*	*19.371*	*0.66%*	*0.0000*	*16vdc*	*9501 Ft.*							*1*						*3.A*	*19.5*	*96.3%*	*1*
N1:SIG33 STROBE S6-3	*PS-2*	*SIG33*	*1:SIG33*	*1000*	*14ga*	*0.0031*	**0.180**	*1.105*	*18.395*	*5.67%*	*0.0000*	*16vdc*	*3167 Ft.*			*2*										*3.A*	*19.5*	*68.4%*	*2*
N1:SIG34 STROBE S6-4	*PS-2*	*SIG34*	*1:SIG34*	*1000*	*14ga*	*0.0031*	**0.090**	*0.553*	*18.947*	*2.83%*	*0.0000*	*16vdc*	*6334 Ft.*			*1*										*3.A*	*19.5*	*84.2%*	*1*
N1:SIG35 STROBE S2-3	*PS-2*	*SIG35*	*1:SIG35*	*600*	*14ga*	*0.0031*	**0.910**	*3.359*	*16.140*	*17.19%*	*0.0000*	*16vdc*	*626 Ft.*		*4*	*7*										*3.A*	*19.5*	*4.2%*	*11*
N1:SIG36 STROBE S2-1	**PS-2**	**SIG36**	**1:SIG36**	**570**	**14ga**	**0.0031**	**0.620**	**2.170**	**17.330**	**11.13%**	**0.0000**	**16vdc**	**919 Ft.**		**5**	*3*										**3.A**	**19.5**	**38.0%**	**8**
N1:SIG37 STROBE S2-2	*PS-2*	*SIG37*	*1:SIG37*	*460*	*14ga*	*0.0031*	**0.890**	*2.514*	*16.986*	*12.89%*	*0.0000*	*16vdc*	*640 Ft.*		*5*	*6*										*3.A*	*19.5*	*28.1%*	*11*
N1:SIG38 SPARE	*PS-2*	*SIG38*	*1:SIG38*	*0*	*14ga*	*0.0031*	*0.000*	*0.000*	*19.500*	*0.00%*	*0.0000*	*16vdc*	*0 Ft.*													*3.A*	*19.5*	*100.0%*	*0*
N1:SIG39 STROBE OUTSIDE SIAMESE	*PS-3*	*SIG39*	*1:SIG39*	*1000*	*14ga*	*0.0031*	**0.060**	*0.368*	*19.132*	*1.89%*	*0.0000*	*16vdc*	*9501 Ft.*					*1*								*3.A*	*19.5*	*89.5%*	*1*
N1:SIG40 HORN OUTSIDE SIAMESE	*PS-3*	*SIG40*	*1:SIG40*	*1000*	*14ga*	*0.0031*	**0.254**	*1.560*	*17.940*	*8.00%*	*0.0000*	*16vdc*	*2244 Ft.*			*1*	*2*									*3.A*	*19.5*	*55.4%*	*3*
N1:SIG41 SPARE	*PS-3*	*SIG41*	*1:SIG41*	*0*	*14ga*	*0.0031*	*0.000*	*0.000*	*19.500*	*0.00%*	*0.0000*	*16vdc*	*0 Ft.*													*3.A*	*19.5*	*100.0%*	*0*
N1:SIG42 CHIME 1ST FLOOR CENTRAL	*PS-3*	*SIG42*	*1:SIG42*	*500*	*14ga*	*0.0031*	**0.360**	*1.105*	*18.395*	*5.67%*	*0.0000*	*16vdc*	*1583 Ft.*			*4*										*3.A*	*19.5*	*68.4%*	*4*
N1:SIG43 BASEMENT EVS DEPT STROBE CKT	*PS-3*	*SIG43*	*1:SIG43*	*600*	*14ga*	*0.0031*	**0.090**	*0.332*	*19.168*	*1.70%*	*0.0000*	*16vdc*	*6334 Ft.*			*1*										*3.A*	*19.5*	*90.5%*	*1*
N1:SIG44 SPARE	*PS-3*	*SIG44*	*1:SIG44*		*14ga*	*0.0031*	*0.000*	*0.000*	*19.500*	*0.00%*	*0.0000*	*16vdc*	*0 Ft.*													*3.A*	*19.5*	*100.0%*	*0*
N1:SIG45 BASEMENT	*PS-3*	*SIG45*	*1:SIG45*	*600*	*14ga*	*0.0031*	**0.712**	*2.623*	*16.877*	*13.45%*	*0.0000*	*16vdc*	*801 Ft.*		*9*		*1*									*3.A*	*19.5*	*25.1%*	*10*
N1:SIG46 STROBES MATERIAL MANAGEMENT	*PS-3*	*SIG46*	*1:SIG46*	*600*	*14ga*	*0.0031*	**0.372**	*1.370*	*18.130*	*7.03%*	*0.0000*	*16vdc*	*1532 Ft.*						*2*							*3.A*	*19.5*	*60.8%*	*2*
N1:SIG47 BASEMENT CORRIDOR	*PS-3*	*SIG47*	*1:SIG47*	*488*	*14ga*	*0.0031*	**0.982**	*2.942*	*16.558*	*15.09%*	*0.0000*	*16vdc*	*580 Ft.*		*9*	*3*	*1*									*3.A*	*19.5*	*15.9%*	*13*
N1:SIG48 SPARE	*PS-3*	*SIG48*	*1:SIG48*		*14ga*	*0.0031*	*0.000*	*0.000*	*19.500*	*0.00%*	*0.0000*	*16vdc*	*0 Ft.*													*3.A*	*19.5*	*100.0%*	*0*
N1:SIG49 S9-1 BLOOD W.& SURG DOC OFFICES	*PS-3*	*SIG49*	*1:SIG49*	*900*	*14ga*	*0.0031*	**0.044**	*0.243*	*19.257*	*1.25%*	*0.0000*	*16vdc*	*12955 Ft.*	*2*												*3.A*	*19.5*	*93.1%*	*2*
N1:SIG50 S9-2 BLOOD LAB EAST	*PS-3*	*SIG50*	*1:SIG50*	*900*	*14ga*	*0.0031*	**0.044**	*0.243*	*19.257*	*1.25%*	*0.0000*	*16vdc*	*12955 Ft.*	*2*												*3.A*	*19.5*	*93.1%*	*2*
N1:SIG51 ADMITING SOUTH	*PS-3*	*SIG51*	*1:SIG51*	*1000*	*14ga*	*0.0031*	**0.044**	*0.270*	*19.230*	*1.39%*	*0.0000*	*16vdc*	*12955 Ft.*	*2*												*3.A*	*19.5*	*92.3%*	*2*
N1:SIG52 ADMITING NORTH	*PS-3*	*SIG52*	*1:SIG52*	*1000*	*14ga*	*0.0031*	**0.022**	*0.135*	*19.365*	*0.69%*	*0.0000*	*16vdc*	*25911 Ft.*	*1*												*3.A*	*19.5*	*96.1%*	*1*
N1:SIG53 ADMITING CHIME	*PS-3*	*SIG53*	*1:SIG53*	*1000*	*14ga*	*0.0031*	**0.022**	*0.135*	*19.365*	*0.69%*	*0.0000*	*16vdc*	*25911 Ft.*	*1*												*3.A*	*19.5*	*96.1%*	*1*
N1:SIG54 SPARE	*PS-3*	*SIG54*	*1:SIG54*		*14ga*	*0.0031*	*0.000*	*0.000*	*19.500*	*0.00%*	*0.0000*	*16vdc*	*0 Ft.*													*3.A*	*19.5*	*100.0%*	*0*
N1:SIG55 C7-9-1 BLOOD LAB SURGERY PREP	*PS-3*	*SIG55*	*1:SIG55*	*1000*	*14ga*	*0.0031*	**0.022**	*0.135*	*19.365*	*0.69%*	*0.0000*	*16vdc*	*25911 Ft.*	*1*												*3.A*	*19.5*	*96.1%*	*1*
N1:SIG56 SPARE	*PS-3*	*SIG56*	*1:SIG56*		*14ga*	*0.0031*	*0.000*	*0.000*	*19.500*	*0.00%*	*0.0000*	*16vdc*	*0 Ft.*													*3.A*	*19.5*	*100.0%*	*0*
N1:SIG57 S1.3 KITCHEN AND SLEEP ROOMS	*PS-3*	*SIG57*	*1:SIG57*	*900*	*14ga*	*0.0031*	**0.022**	*0.122*	*19.378*	*0.62%*	*0.0000*	*16vdc*	*25911 Ft.*	*1*												*3.A*	*19.5*	*96.5%*	*1*
N1:SIG58 S1.4 GIFT SHOP & ELEVATOR AREA	*PS-3*	*SIG58*	*1:SIG58*	*900*	*14ga*	*0.0031*	**0.350**	*1.934*	*17.566*	*9.92%*	*0.0000*	*16vdc*	*1629 Ft.*		*5*											*3.A*	*19.5*	*44.7%*	*5*
N1:SIG59 S8.3 SURGERY PREP AND HOLDING	*PS-3*	*SIG59*	*1:SIG59*	*900*	*14ga*	*0.0031*	**0.350**	*1.934*	*17.566*	*9.92%*	*0.0000*	*16vdc*	*1629 Ft.*		*5*											*3.A*	*19.5*	*44.7%*	*5*
N1:SIG60 S7.1 SURGERY PREP	*PS-3*	*SIG60*	*1:SIG60*	*900*	*14ga*	*0.0031*	**0.350**	*1.934*	*17.566*	*9.92%*	*0.0000*	*16vdc*	*1629 Ft.*		*5*											*3.A*	*19.5*	*44.7%*	*5*
N1:SIG61 S7.2 SURGERY PREP	*PS-3*	*SIG61*	*1:SIG61*	*900*	*14ga*	*0.0031*	**0.140**	*0.774*	*18.726*	*3.97%*	*0.0000*	*16vdc*	*4072 Ft.*		*2*											*3.A*	*19.5*	*77.9%*	*2*
N1:SIG62 SPARE	*PS-3*	*SIG62*	*1:SIG62*		*14ga*	*0.0031*	*0.000*	*0.000*	*19.500*	*0.00%*	*0.0000*	*16vdc*	*0 Ft.*													*3.A*	*19.5*	*100.0%*	*0*
1:SIG63 CHIMES 2ND FLOOR TOWER C3-1	*PS-4*	*SIG63*	*1:SIG63*	*1000*	*14ga*	*0.0031*	**0.560**	*3.438*	*16.062*	*17.63%*	*0.0000*	*16vdc*	*1018 Ft.*		*8*											*3.A*	*19.5*	*1.8%*	*8*
1:SIG64 STROBES 2ND FLOOR TOWER S3-1	*PS-4*	*SIG64*	*1:SIG64*	*530*	*14ga*	*0.0031*	**0.840**	*2.734*	*16.766*	*14.02%*	*0.0000*	*16vdc*	*679 Ft.*		*3*	*7*										*3.A*	*19.5*	*21.9%*	*10*
1:SIG65 STROBES 2ND FLOOR TOWER S3-2	*PS-4*	*SIG65*	*1:SIG65*	*522*	*14ga*	*0.0031*	**0.950**	*3.045*	*16.455*	*15.61%*	*0.0000*	*16vdc*	*600 Ft.*		*2*	*9*										*3.A*	*19.5*	*13.0%*	*11*
SPARE	*PS-4*	*SIG66*	*1:SIG66*		*14ga*	*0.0031*	*0.000*	*0.000*	*19.500*	*0.00%*	*0.0000*	*16vdc*	*0 Ft.*													*3.A*	*19.5*	*100.0%*	*0*
1:SIG67 STROBES 3RD FLOOR TOWER S4-1	*PS-4*	*SIG67*	*1:SIG67*	*437*	*14ga*	*0.0031*	**0.840**	*2.254*	*17.246*	*11.56%*	*0.0000*	*16vdc*	*679 Ft.*		*3*	*7*										*3.A*	*19.5*	*26.6%*	*10*
1:SIG68 STROBES 3RD FLOOR TOWER S4-2	*PS-4*	*SIG68*	*1:SIG68*	*413*	*14ga*	*0.0031*	**1.050**	*2.663*	*16.837*	*13.65%*	*0.0000*	*16vdc*	*543 Ft.*		*6*	*7*										*3.A*	*19.5*	*23.9%*	*13*
1:SIG69 CHIMES 4TH FLOOR	*PS-4*	*SIG69*	*1:SIG69*		*14ga*	*0.0031*	**0.015**	*0.000*	*19.500*	*0.00%*	*0.0000*	*16vdc*	*38002 Ft.*									*1*				*3.A*	*19.5*	*99.5%*	*1*
1:SIG70 STROBES 1ST FLOOR	*PS-4*	*SIG70*	*1:SIG70*	*530*	*14ga*	*0.0031*	**0.840**	*2.734*	*16.766*	*14.02%*	*0.0000*	*16vdc*	*679 Ft.*		*3*	*7*										*3.A*	*19.5*	*21.9%*	*10*
1:SIG71 STROBES 1ST FLOOR	*PS-4*	*SIG71*	*1:SIG71*	*522*	*14ga*	*0.0031*	**0.950**	*3.045*	*16.455*	*15.61%*	*0.0000*	*16vdc*	*600 Ft.*		*2*	*9*										*3.A*	*19.5*	*13.0%*	*11*
1:SIG72 CHIMES 3RD FLOOR C5-1	*PS-4*	*SIG72*	*1:SIG72*	*494*	*14ga*	*0.0031*	**0.630**	*1.911*	*17.580*	*9.80%*	*0.0000*	*16vdc*	*905 Ft.*		*9*											*3.A*	*19.5*	*45.4%*	*9*
1:SIG73 STROBES 4TH FLOOR	*PS-4*	*SIG73*	*1:SIG73*		*14ga*	*0.0031*	**0.015**	*0.000*	*19.500*	*0.00%*	*0.0000*	*16vdc*	*38002 Ft.*									*1*				*3.A*	*19.5*	*99.5%*	*1*
SPARE	*PS-4*	*SIG74*	*1:SIG74*		*14ga*	*0.0031*	*0.000*	*0.000*	*19.500*	*0.00%*	*0.0000*	*16vdc*	*0 Ft.*													*3.A*	*19.5*	*100.0%*	*0*
1:SIG75 1ST FLOOR CHIME	*PS-4*	*SIG75*	*1:SIG75*	*100*	*14ga*	*0.0031*	**0.560**	*0.344*	*19.156*	*1.76%*	*0.0000*	*16vdc*	*1018 Ft.*		*8*											*3.A*	*19.5*	*81.3%*	*8*
1:SIG76 2ND FLOOR TOWER S3-3	*PS-4*	*SIG76*	*1:SIG76*	*670*	*14ga*	*0.0031*	**0.840**	*3.456*	*16.044*	*17.72%*	*0.0000*	*16vdc*	*679 Ft.*		*3*	*7*										*3.A*	*19.5*	*1.3%*	*10*
SPARE	*PS-4*	*SIG77*	*1:SIG77*		*14ga*	*0.0031*	*0.000*	*0.000*	*19.500*	*0.00%*	*0.0000*	*16vdc*	*0 Ft.*													*3.A*	*19.5*	*100.0%*	*0*
SPARE	*PS-4*	*SIG78*	*1:SIG78*		*14ga*	*0.0031*	*0.000*	*0.000*	*19.500*	*0.00%*	*0.0000*	*16vdc*	*0 Ft.*													*3.A*	*19.5*	*100.0%*	*0*
SPARE	*PS-4*	*SIG79*	*1:SIG79*		*14ga*	*0.0031*	*0.000*	*0.000*	*19.500*	*0.00%*	*0.0000*	*16vdc*	*0 Ft.*													*3.A*	*19.5*	*100.0%*	*0*
SPARE	*PS-4*	*SIG80*	*1:SIG80*		*14ga*	*0.0031*	*0.000*	*0.000*	*19.500*	*0.00%*	*0.0000*	*16vdc*	*0 Ft.*													*3.A*	*19.5*	*100.0%*	*0*
N1SIG102 SPARE	*XPS-1*	*SIG81*	*1:SIG81*	*1000*	*14ga*	*0.0031*	**0.186**	*1.142*	*18.358*	*5.86%*	*0.0000*	*16vdc*	*3065 Ft.*							*1*						*3.A*	*19.5*	*67.4%*	*1*
N1:SIG103 SPARE	*XPS-1*	*SIG82*	*1:SIG82*		*14ga*	*0.0031*	*0.000*	*0.000*	*19.500*	*0.00%*	*0.0000*	*16vdc*	*0 Ft.*													*3.A*	*19.5*	*100.0%*	*0*

NOTE:
LUMP SUM METHOD WAS USED TO CALCULATE ALLOWABLE VOLTAGE DROP. THIS METHOD ALLOWS FOR A SMALL MARGIN OF SAFETY, TAKING INTO CONSIDERATION THAT THE ACTUAL INSTALLED CIRCUIT ROUTING MAY DIFFER FROM WHAT IS SHOWN ON THE SHOP DRAWINGS. IF THE ACTUAL CIRCUIT LENGTH IS GOING TO EXCEED THE MAXIMUM ALLOWABLE CIRCUIT LENGTH, CONTACT YOUR LOCAL JOHNSON CONTROLS DISTRICT OFFICE.

Johnson Controls
DISTRICT: 1-418
10685 E. PROSPECTON AVE
AURORA, CO 80012
SERVICE: 303-355-0000
PHONE: 303-326-9500
FAX: 303-355-9415

NICET CERTIFICATION INFORMATION
CALE RAUCH
NICET Fire Alarm, III
Certification #151588
Valid Through: 12/01/25
08/20/2024

THE MEDICAL CENTER OF AURORA - SOUTH TOWER NODE 1 ED ENTRY AND TRIAGE RENOVATION

THE MEDICAL CENTER OF AURORA - SOUTH TOWER
1501 SOUTH POTOMAC STREET
AURORA, COLORADO 80012

ISSUE LOG

MARK	DATE	CAD	CHK	DESCRIPTION
				Revisions shown with ⚠ symbol

FOR PERMIT

DRAWN BY:	CCD
CHECKED BY:	CBR
ISSUE DATE:	8/14/24
JOB #:	
PROJECT #:	419-650521647

JOHNSON CONTROLS © 2024

SYSTEM:
FIRE ALARM SYSTEM

SHEET:
NODE-1 4100U FACP CALCULATIONS AND SCHEDULES INTERIM CONTINUED

FA-602

FILE PATH: C:\Users\jdyson4\OneDrive - Johnson Controls\Medical Center of Aurora\1501 S Potomac - Aurora South\South Tower - Node 1\4.3-1st ED Entry & Triage Reno - 2024 - 650521647-FireFA-601.dwg
LAST SAVED BY: JDYSON4
LAST PRINTED: 8/20/2024 11:41:01 AM
36" x 42" Arch E1 Size
© Johnson Controls 2024. All rights reserved. Reuse, copying, modification or alteration of the drawings and other information contained herein is strictly prohibited.

Module	Qty	Description	Setting	Standby Current	Total Standby	Alarm Current	Total Alarm
Panel Equipment							
4100-7150	1	MASTER CONTROLLER UPGRADE W/ 2X40 DISPLAY (4100 BA		0.1630	0.1630	0.2100	0.2100
4100-6078	1	NETWORK IF CARD, MODULAR		0.0460	0.0460	0.0460	0.0460
4100-6056	2	NETWORK MEDIA CARD WIRED		0.0550	0.1100	0.0550	0.1100
4100-0304	1	STYLE 7 REMOTE UNIT INTERFACE		0.0850	0.0850	0.0850	0.0850
4100-5005	8	ZONE MODULE, 8 IDC, CLASS B		0.0750	0.6000	0.1950	1.5600
4100-4321	10	6 CIRCUIT CLASS B (STYLE Y)		0.0250	0.2500	0.0700	0.7000
4100-3003	2	8 PT AUX RELAY MODULE 3 AMP		0.0250	0.0500	0.2800	0.5600
4100-0110	5	MAPNET II ADDRESSABLE MODULE *		0.2700	1.3500	0.2900	1.4500
4100-6005	1	MASTER CONTROLLER POWER SUPPLY		0.0000	0.0000	0.0000	0.0000
4100-0108	2	EXPANSION 120V 8AMP POWER SUPPLY		0.0000	0.0000	0.0000	0.0000
4100-6038	1	DUAL RS-232 IF CARD		0.1320	0.1320	0.1320	0.1320
4100-5101	2	EXPANSION PWR SUPPLY (XPS) - 120VAC 60HZ		0.0500	0.1000	0.0500	0.1000
4100-3110	3	IDNet2+2 MODULE - UP TO 250 DEVICES 4 ISOLATED LOOPS *		0.0500	0.1500	0.1000	0.3000
4100-5325	1	ENHANCED POWER SUPPLY, 3 CHANNELS, 120V		0.1250	0.1250	0.2200	0.2200
4009-9601	**1**	**IDNAC REPEATER 120V PLATINUM UL/ULC**		**0.0700**	**0.0700**	**0.0960**	**0.0960**
4100-96xx	3	REMOTE ANNUNCIATORS & MINIPLEX TRANSPONDERS *		RUI CURRENT DRAWS INCLUDED BELOW			
		Panel Totals			3.2310		5.5690
IDNet Addressable Devices (SLC)							
4090-9001	7	IDNET SUPERVISED IAM *		Constant current draw of .8mA standby and 1mA alarm per address used. Devices requiring additional current are accounted for in the section labeled "Miscellaneous Peripheral Devices Requiring Additional System Power".			
4090-9002	1	IDNET RELAY IAM *					
4098-9714	**32**	**TRUEALARM PHOTO SMOKE SENSOR**					
4098-9733	8	TRUEALARM HEAT SENSOR					
4098-9756	**3**	**TRUEALARM DUCT SMOKE SENSOR W/ RELAY OUTPUT ***					
4098-9789	1	TRUEALARM SENSOR BASE W/ LED OUTPUT *					
⟨1⟩ **4098-9792**	**39**	**TRUEALARM SENSOR BASE ***					
4099-9006	**12**	**ADDRESSABLE DOUBLE ACTION MANUAL STATION, PUSH ***					
Mapnet Addressable Devices (SLC)							
2190-9155	1	MAPNET CLASS B MONITOR ZAM *					
2190-9161	6	MAPNET CLASS B SIGNAL ZAM *					
2190-9163	44	MAPNET UNSUPERVISED CONTROL ZAM *					
2190-9172	41	MAPNET SUPERVISED IAM *					
2190-9173	3	MAPNET 2 POINT INPUT/OUTPUT ZAM *					
2099-9795	21	MAPNET SINGLE ACTION PULL STATION *					
4098-9714	305	TRUEALARM PHOTO SMOKE SENSOR					
⟨1⟩ **4098-9733**	**32**	**TRUEALARM HEAT SENSOR**					
4098-9756	36	TRUEALARM DUCT SMOKE SENSOR W/ RELAY OUTPUT *					
4098-9789	**296**	**TRUEALARM SENSOR BASE W/ LED OUTPUT ***					
4098-9792	41	TRUEALARM SENSOR BASE *					
4090-9008	3	ADDRESSABLE DUAL CONTACT RELAY IAM *					
Miscellaneous Peripheral Devices That Require (Additional) System Power							
4098-9843	**39**	**ENCAPSULATED RELAY PAM-SD**		**0.0000**	**0.0000**	**0.0150**	**0.5850**
4098-9756	**39**	**TRUEALARM DUCT SMOKE SENSOR W/ RELAY OUTPUT**		**0.0030**	**0.1170**	**0.0150**	**0.5850**
4603-9101	13	SERIAL LCD ANNUNCIATOR		0.0650	0.8450	0.1400	1.8200
2098-9808	26	REMOTE ALARM INDICATOR		0.0010	0.0260	0.0000	0.0000
2098-9806	**55**	**REMOTE TEST STATION W/ LED AND KEY SWITCH**		**0.0000**	**0.0000**	**0.0000**	**0.0000**
2190-9155	1	MAPNET CLASS B MONITOR ZAM		0.0200	0.0200	0.0900	0.0900
2190-9163	45	MAPNET UNSUPERVISED CONTROL ZAM		0.0100	0.4500	0.0400	1.8000
2190-9161	6	MAPNET CLASS B SIGNAL ZAM		0.0150	0.0900	0.0400	0.2400
2088-9021	1	ENCAPSULATED RELAY PAM-1		0.0000	0.0000	0.0150	0.0150
Notification Appliances			Setting				
4009-9001	2	FOUR CIRCUIT NAC EXTENDER, 120 VAC		0.0000	0.0000	0.0150	0.0300
4903-9219	10	HORN/STROBE, NON-SYNC, RED, WALL MTD	15	0.0000	0.0000	0.0220	0.2200
4903-9292	**88**	**CH70-2415W-FR,CHIME/STROBE, NON-SYNC,RED, WALL MTD**	**15**	**0.0000**	**0.0000**	**0.0700**	**6.1600**
4904-9137	105	15CD VISIBLE ONLY RED	15	0.0000	0.0000	0.0900	9.4500
4906-9101	1	V/O MC NON-ADDRESS, RED, WALL	15	0.0000	0.0000	0.0600	0.0600
4906-9101	5	V/O MC NON-ADDRESS, RED, WALL	75	0.0000	0.0000	0.1860	0.9300
CH70-241575W-FR (C)	1	CHIME, NON-SYNC,RED, WALL MTD	CHIME	0.0000	0.0000	0.0220	0.0220
CH70-24MCW-FR	4	MULTI CD CHIME STROBE, WALL MNT, RED	15	0.0000	0.0000	0.0820	0.3280
RSS-24MCW-FR	1	MULTI CD STROBE, WALL MNT, RED	15	0.0000	0.0000	0.0600	0.0600
IDNac Notification Appliances			Setting				
4009-9601	**1**	**IDNAC REPEATER 120V PLATINUM UL/ULC ***		**0.0032**	**0.0032**	**0.0032**	**0.0032**
4905-9929	**2**	**TRUEALERT ISOLATOR MODULE**		**0.0032**	**0.0064**	**0.0100**	**0.0200**
49MTV-WRF	**38**	**MULTI-TONE A/V, RED, WALL MOUNT**	**15**	**0.0016**	**0.0608**	**0.1450**	**5.5100**
49MTV-WRF	1	MULTI-TONE A/V, RED, WALL MOUNT	185	0.0016	0.0016	0.2990	0.2990
49MTV-WRF	**4**	**MULTI-TONE A/V, RED, WALL MOUNT**	**30**	**0.0016**	**0.0064**	**0.1630**	**0.6520**
49VO-APPLC	**31**	**STROBE, APPLIANCE ONLY, CEILING MOUNT**	**15**	**0.0008**	**0.0248**	**0.0550**	**1.7050**
49VO-APPLC	1	STROBE, APPLIANCE ONLY, CEILING MOUNT	30	0.0008	0.0008	0.0830	0.0830
49VO-WRFO	2	VO, WALL MT, RED, FIRE LABEL, WEATHERPROOF	15	0.0008	0.0016	0.0600	0.1200
49VO-WRF	**4**	**VO, WALL MT, RED, FIRE LABEL**	**15**	**0.0008**	**0.0032**	**0.0470**	**0.1880**
49VOH-APPLCR	**2**	**STROBE, APPLIANCE ONLY, CEILING MOUNT, RED LENS**	**75**	**0.0008**	**0.0016**	**0.1280**	**0.2560**
		Total IDNac Device Current:			0.1104		8.8362
		IDNac Current Boost for 29vdc Regulated Output **					5.0377
		Peripheral Totals			1.5480		36.2689
		RUI Totals	16		0.0560		0.0560
		Address Totals	578.5 Addresses		0.9268		0.9394
		System Totals*:		Standby	5.8722	Alarm	42.8333

* Device Address current draw included below (See Additional Current Draws):
1. 2-wire detector alarm current is included in the alarm current of the Initiating Device Circuit.

Battery Set #1 (Cabinet/Charger #1)			Standby Current	Standby Total	Alarm Current	Alarm Total
Select ALL Power Supplies on this battery set:						
PS-1				1.3150		6.9520
PS-2				1.0530		11.0640
PS-3				1.9310		8.9410
XPS-1				0.1560		0.5110
XPS-2				0.1000		0.1500
EPS-1				0.3200		7.9022
			Sub Total	4.8750		35.5202
Additional Current Draws:						
RUI Connected Peripheral Devices		16	x 0.0035	= 0.0560	x 0.0035	= 0.0560
MAPNET/IDNet Device Address Communication Current		579	x 0.001602	= 0.9268	x 0.001624	= 0.9394
			Sub Total	5.8578		40.8235
Spare addressable point capacity	20%	116	x 0.001602	= 0.1858	x 0.001624	= 0.1884
			Total	6.0436		41.0119
Standby Time =	4	Hrs	x 6.0436	= 24.1743	Standby Ah	
Alarm Time =	5	Min	0.08333 x 41.0119	= 3.4177	Alarm Ah	
				27.5920		
Additional Spare Battery Capacity =	20%		+	5.5184		
				33.1104		
Battery Discharge Factor =	25%		+	8.2776		
Minimum Battery Required	2081-9296 50AH (2x)			41.3880		
Battery Supplied	2081-9296 50AH (2x)					

* System Totals represent total system current requirements. Those currents may be distributed between multiple battery sets or power supplies as shown above.

Repeater Power Supply Battery Set:				Standby Total		Alarm Total
EPR-1				0.0144		1.2800
Additional Current Draw: IDNac Current Boost for 29vdc Regulated Output **				0.0000		0.7298
			Total	0.0144		2.0098
Standby Time =	4	Hrs	x 0.0144	= 0.0576	Standby Ah	
Alarm Time =	5	Min	0.08333 x 2.0098	= 0.1675	Alarm Ah	
				0.2251		
Additional Spare Battery Capacity =	20%		+	0.0450		
				0.2701		
Battery Discharge Factor =	20%		+	0.0540		
Minimum Battery Required	2081-9272 6.2AH (2x)			0.3241		
Battery Supplied	2081-9274 10AH (2x)					

MAPNET CHANNEL 1:M3				SWITCH SETTINGS									
Address	Device Type	Point Type	Location Description	1	2	3	4	5	6	7	8		9
1:M3-1	ADRPUL	PULL	1:M3-1 FLR 1E - EXIT BY PHARMACY	X								ON	
1:M3-2	ADRPUL	PULL	1:M3-2 FLR 1E - E.D. DECK ELEC. RM		X							ON	
1:M3-3			SPARE	X	X							ON	
1:M3-4			SPARE			X						ON	
1:M3-5			SPARE	X		X						ON	
1:M3-6	ADRPUL	PULL	1:M3-6 FLR 1E - EXIT BY E.D. WAITING RM		X	X						ON	
1:M3-7			SPARE	X	X	X						ON	
1:M3-8	RZAM	RELAY	1:M3-8 1ST FL ELEVATOR #5 WON DOOR				X					ON	
1:M3-9			SPARE	X			X					ON	
1:M3-10	RZAM	RRELAY	1:M3-10 1ST FL CONTROL FOR AUTO DOORS		X		X					ON	
1:M3-11	GENIAM	SO	1:M3-11 FLR 1E-ER GLYCOL LOOP IN CEILING	X	X		X					ON	
1:M3-12			SPARE			X	X					ON	
1:M3-13	GENIAM	SO	1:M3-13 BSMT ELEV 5 SHAFT TAMPER SWITCH	X		X	X					ON	
1:M3-14			SPARE		X	X	X					ON	
1:M3-15	PHOTO	VSMOKE	1:M3-15 FLR 1W - HALL BY LAB	X	X	X	X					ON	
1:M3-16			SPARE					X				ON	
⟨1⟩ **1:M3-17**			**SPARE**	X				X				ON	
1:M3-18	PHOTO	VSMOKE	1:M3-18 FLR 1W - HALL BY LAB		X			X				ON	
1:M3-19	PHOTO	VSMOKE	1:M3-19 FLR 1W - HALL BY PHARMACY	X	X			X				ON	
1:M3-20	PHOTO	VSMOKE	1:M3-20 FLR 1W - HALL BY PHARMACY			X		X				ON	
1:M3-21	PHOTO	VSMOKE	1:M3-21 FLR 1W - HALL BY PHARMACY	X		X		X				ON	
1:M3-22			SPARE		X	X		X				ON	
1:M3-23			SPARE	X	X	X		X				ON	
1:M3-24	PHOTO	VSMOKE	1:M3-19 FLR 1W - HALL BY PHARMACY				X	X				ON	
1:M3-25	PHOTO	VSMOKE	1:M3-25 FLR 1E - HALL BY PHARMACY	X			X	X				ON	
1:M3-26	PHOTO	VSMOKE	1:M3-26 FLR 1E - EXIT HALL BY PHARMACY		X		X	X				ON	
1:M3-27	PHOTO	VSMOKE	1:M3-27 FLR 1E - EXIT HALL BY PHARMACY	X	X		X	X				ON	
1:M3-28	PHOTO	VSMOKE	1:M3-28 FLR 1E - EXIT HALL BY PHARMACY			X	X	X				ON	
1:M3-29	PHOTO	VSMOKE	1:M3-29 FLR 1E - EXIT HALL BY PHARMACY	X		X	X	X				ON	
1:M3-30	PHOTO	VSMOKE	1:M3-30 FLR 1E - E.D. - WEST ENTRANCE		X	X	X	X				ON	
1:M3-31	PHOTO	VSMOKE	1:M3-31 FLR 1E - E.D. - BY EXAM RM 6	X	X	X	X	X				ON	
1:M3-32	PHOTO	VSMOKE	1:M3-32 FLR 1E - E.D. - O/S FAM CON 5310						X			ON	
1:M3-33	PHOTO	VSMOKE	1:M3-33 FLR 1E - E.D. - BY EXAM RM7	X					X			ON	
1:M3-34	PHOTO	VSMOKE	1:M3-34 FLR 1E - E.D. BY NURSE STATION		X				X			ON	
1:M3-35	PHOTO	VSMOKE	1:M3-35 FLR 1E - E.D. BY TRAUMA 1-5324	X	X				X			ON	
1:M3-36			SPARE			X			X			ON	
1:M3-37	PHOTO	VSMOKE	1:M3-37 FLR 1E - E.D. HALL BY RM 20	X		X			X			ON	
1:M3-38	PHOTO	VSMOKE	1:M3-38 FLR 1E - E.D. HALL BY RM 15		X	X			X			ON	
1:M3-39	PHOTO	VSMOKE	1:M3-39 FLR 1E - E.D. HALL BY RM 17	X	X	X			X			ON	
1:M3-40	PHOTO	VSMOKE	1:M3-40 FLR 1E - E.D. HALL BY RM 19				X		X			ON	
1:M3-41	PHOTO	VSMOKE	1:M3-41 FLR 1E - E.D. HALL BY RM 32	X			X		X			ON	
1:M3-42	PHOTO	VSMOKE	1:M3-42 FLR 1E - E.D. HALL BY RM 28		X		X		X			ON	
1:M3-43	PHOTO	VSMOKE	1:M3-43 FLR 1E - E.D. HALL BY RM 24	X	X		X		X			ON	
1:M3-44	PHOTO	VSMOKE	1:M3-44 FLR 1E - E.D. HALL BY RM 25			X	X		X			ON	
1:M3-45	PHOTO	VSMOKE	1:M3-45 FLR 1E - E.D. HALL BY RM 25	X		X	X		X			ON	
1:M3-46	PHOTO	VSMOKE	1:M3-46 FLR 1E - E.D. ELEC RM 1E-5902A		X	X	X		X			ON	
1:M3-47	ADRPUL	PULL	1:M3-47 FLR 1E - E.D. EAST ENTRY	X	X	X	X		X			ON	
1:M3-48	PHOTO	VSMOKE	1:M3-48 FLR 1E - E.D. BY NURSE STATION					X	X			ON	
1:M3-49	PHOTO	VSMOKE	1:M3-49 FLR 1E - E.D. BY EXAM RM 10	X				X	X			ON	
1:M3-50	PHOTO	VSMOKE	1:M3-50 FLR 1E - E.D. BY ALCOVE 5329		X			X	X			ON	
1:M3-51	PHOTO	VSMOKE	1:M3-51 FLR 1E - E.D. BY TRAUMA 3-5321	X	X			X	X			ON	
1:M3-52	PHOTO	VSMOKE	1:M3-52 FLR 1E - E.D. BY EXAM RM 11			X		X	X			ON	
1:M3-53	PHOTO	VSMOKE	1:M3-53 FLR 1E - E.D. HALL BY RM 43	X		X		X	X			ON	
1:M3-54	PHOTO	VSMOKE	1:M3-54 FLR 1E - E.D. HALL BY RM 43		X	X		X	X			ON	
1:M3-55			SPARE	X	X	X		X	X			ON	
⟨1⟩ **1:M3-56**			**SPARE**				X	X	X			ON	
1:M3-57	PHOTO	VSMOKE	1:M3-57 FLR 1E - E.D. HALL BY RM 26	X			X	X	X			ON	
1:M3-58	PHOTO	VSMOKE	1:M3-58 FLR 1E - E.D. - BY TRIAGE DESK		X		X	X	X			ON	
1:M3-59			SPARE	X	X		X	X	X			ON	
1:M3-60			**SPARE**			X	X	X	X			ON	
1:M3-61			**SPARE**	X		X	X	X	X			ON	
1:M3-62			**SPARE**		X	X	X	X	X			ON	
⟨1⟩ **1:M3-63**			**SPARE**	X	X	X	X	X	X			ON	
1:M3-64			**SPARE**							X		ON	
1:M3-65			**SPARE**	X						X		ON	
1:M3-66			**SPARE**		X					X		ON	
1:M3-67			SPARE	X	X					X		ON	
⟨1⟩ **1:M3-68**			**SPARE**			X				X		ON	
1:M3-69	PHOTO	VSMOKE	1:M3-69 FLR 1E - HALL BY E.D. ON-CALL RM	X		X				X		ON	
1:M3-70	PHOTO	VSMOKE	1:M3-70 FLR 1E - HALL BY E.D. ON-CALL RM		X	X				X		ON	
1:M3-71	PHOTO	VSMOKE	1:M3-71 FLR 1E - E.D. HALL BY RM 48	X	X	X				X		ON	
1:M3-72	PHOTO	VSMOKE	1:M3-72 FLR 1E - E.D. HALL BY RM 44				X			X		ON	
1:M3-73	PHOTO	VSMOKE	1:M3-73 FLR 1E - E.D. HALL 02 BY RM 54	X			X			X		ON	
1:M3-74	PHOTO	VSMOKE	1:M3-74 FLR 1E - E.D. HALL 02 BY RM 51		X		X			X		ON	
1:M3-75	PHOTO	VSMOKE	1:M3-75 FLR 1E - E.D. ADMIN OFFICES	X	X		X			X		ON	
1:M3-76	PHOTO	VSMOKE	1:M3-76 FLR 1E - HALL BEHIND E.D.			X	X			X		ON	
1:M3-77	PHOTO	VSMOKE	1:M3-77 FLR 1E - HALL BY E.D. ON-CALL RM	X		X	X			X		ON	
1:M3-78	PHOTO	VSMOKE	1:M3-78 FLR 1E - HALL BY E.D. ON-CALL RM		X	X	X			X		ON	
1:M3-79	PHOTO	VSMOKE	1:M3-79 FLR 1E - E.D. SPECIALITY ON-CALL	X	X	X	X			X		ON	
1:M3-80	PHOTO	VSMOKE	1:M3-80 FLR 1E - HALL BY E.D. ON-CALL RM					X		X		ON	
1:M3-81	PHOTO	VSMOKE	1:M3-81 FLR 1E - HALL BY E.D. ON-CALL RM	X				X		X		ON	
1:M3-82	PHOTO	VSMOKE	1:M3-82 FLR 1E - HALL BY E.D. ON-CALL RM		X			X		X		ON	
1:M3-83	PHOTO	VSMOKE	1:M3-83 FLR 1E - IN THE E.D. ON-CALL RM	X	X			X		X		ON	
1:M3-84	PHOTO	VSMOKE	1:M3-84 FLR 1E - HALL BATH BY E.D. ADMIN			X		X		X		ON	
1:M3-85	PHOTO	VSMOKE	1:M3-85 FLR 1E - BACK HALL BY QUIET RM	X		X		X		X		ON	
1:M3-86	PHOTO	VSMOKE	1:M3-86 FLR 1E - HALL BY MEDICAL LIBRARY		X	X		X		X		ON	
1:M3-87			SPARE	X	X	X		X		X		ON	
1:M3-88			SPARE				X	X		X		ON	
1:M3-89	PHOTO	VSMOKE	1:M3-89 FLR 1E - HALL BY PACU	X			X	X		X		ON	
1:M3-90	PHOTO	VSMOKE	1:M3-90 FLR 1E - HALL BY PACU		X		X	X		X		ON	
1:M3-91			SPARE	X	X		X	X		X		ON	
1:M3-92			SPARE			X	X	X		X		ON	
1:M3-93	PHOTO	VSMOKE	1:M3-93 FLR 1E - HALL BY PACU	X		X	X	X		X		ON	
1:M3-94	PHOTO	VSMOKE	1:M3-94 FLR 1E - HALL BY PACU		X	X	X	X		X		ON	
1:M3-95	PHOTO	VSMOKE	1:M3-95 FLR 1E - HALL BY PACU	X	X	X	X	X		X		ON	
1:M3-96	PHOTO	VSMOKE	1:M3-96 FLR 1E - HALL BY PACU						X	X		ON	
1:M3-97	PHOTO	VSMOKE	1:M3-97 FLR 1E - HALL BY E.D. STAIRWELL	X					X	X		ON	
1:M3-98	PHOTO	VSMOKE	1:M3-98 FLR 1E - HALL BY E.D. STAIRWELL		X				X	X		ON	
1:M3-99	PHOTO	VSMOKE	1:M3-99 FLR 1E - HALL BY E.D. STAIRWELL	X	X				X	X		ON	
1:M3-100	PHOTO	VSMOKE	1:M3-100 FLR 1E - EMS LOUNGE			X			X	X		ON	
⟨1⟩ **1:M3-101**			**SPARE**	X		X			X	X		ON	
1:M3-102	PHOTO	VSMOKE	1:M3-102 FLR 1E - E.D. HALL BY RM 13		X	X			X	X		ON	
1:M3-103	PHOTO	VSMOKE	1:M3-103 FLR 1W - PHARMACY	X	X	X			X	X		ON	
1:M3-104	PHOTO	VSMOKE	1:M3-104 FLR 1W - PHARMACY				X		X	X		ON	
1:M3-105	PHOTO	VSMOKE	1:M3-105 FLR 1W - PHARMACY	X			X		X	X		ON	
1:M3-106	PHOTO	VSMOKE	1:M3-106 FLR 1W - PHARMACY ANTE ROOM		X		X		X	X		ON	
1:M3-107	PHOTO	VSMOKE	1:M3-107 FLR 1W - PHARMACY MEETING ROOM	X	X		X		X	X		ON	
1:M3-108	GENIAM	UTILITY	1:M3-108 FLR 1E - E.D. SPARE MON 2 PT IO			X	X		X	X		ON	
1:M3-109	RZAM	RRELAY	1:M3-109 FLR 1E - E.D. DOOR RELEASE	X		X	X		X	X		ON	
1:M3-110	PHOTO	VSMOKE	1:M3-110 FL CTL TWR E OUTSIDE EMS LOUNGE		X	X	X		X	X		ON	
1:M3-111	PHOTO	VSMOKE	1:M3-111 FL CTL TWR E HALL BY EMS LOUNGE	X	X	X	X		X	X		ON	
1:M3-112			SPARE					X	X	X		ON	
1:M3-113			SPARE	X				X	X	X		ON	
1:M3-114	PHOTO	VSMOKE	1:M3-114 FLR 1E - E.D. NURSE 5200		X			X	X	X		ON	
1:M3-115	PHOTO	VSMOKE	1:M3-115 FLR 1E - E.D. SECURE HOLDING 52	X	X			X	X	X		ON	
1:M3-116	PHOTO	VSMOKE	1:M3-116 FLR 1E - E.D. SECURE HOLDING 51			X		X	X	X		ON	
1:M3-117	RZAM	RELAY	1:M3-117 FLR 1E - E.D. HALL DR RELEASE E	X		X		X	X	X		ON	
1:M3-118	RZAM	RELAY	1:M3-118 FLR 1E - E.D. NURSE DR RELEASE		X	X		X	X	X		ON	
1:M3-119	RZAM	RELAY	1:M3-119 FLR 1E - E.D. HALL DR RELEASE W	X	X	X		X	X	X		ON	
1:M3-120			SPARE				X	X	X	X		ON	
1:M3-121			SPARE	X			X	X	X	X		ON	
1:M3-122			SPARE		X		X	X	X	X		ON	
1:M3-123			SPARE	X	X		X	X	X	X		ON	
1:M3-124			SPARE			X	X	X	X	X		ON	
1:M3-125			SPARE	X		X	X	X	X	X		ON	
1:M3-126			SPARE		X	X	X	X	X	X		ON	
1:M3-127			SPARE	X	X	X	X	X	X	X		ON	

NOTE: THE LABELS SHOWN ABOVE WILL BE USED FOR PROGRAMMING PURPOSES.
THE LABELS ARE BASED UPON INFORMATION SHOWN ON THE ARCHITECTURAL DRAWINGS.
ANY CHANGES TO THESE LABELS MUST BE NOTED ON THE SUBMITTAL REVIEW, PRIOR TO PROGRAMMING.
POINTS SHOWN IN ITALIC TEXT REFER TO EXISTING DEVICES.

IDNET CHANNEL 1:M13	ADDRESSES IN USE: 51 (20.4%) | SPARE ADDRESSES: 199 (79.6%)			
Address	Device Type	Point Type	Location Description	
1:M13-1(L1)	HEAT	HEAT	1:M13-1 1ST FL MAIN ELECT ROOM	1:13-1
1:M13-2(L1)	HEAT	HEAT	1:M13-2 1ST FL ELECT GENERATORS	1:13-2
1:M13-3(L1)	IAM	HEAT	1:M13-3 1ST FL BOILER ROOM	1:13-3
1:M13-4(L1)	IAM	HEAT	1:M13-4 1ST FL BOILER ROOM	1:13-4
1:M13-5(L1)	HEAT	HEAT	1:M13-5 1ST FL ELEC RM BY ED HALL E	1:13-5
1:M13-6(L1)	IAM	HEAT	1:M13-6 1ST FL BOILER ROOM	1:13-6
1:M13-7(L1)	IAM	HEAT	1:M13-7 1ST FL BOILERROOM	1:13-7
1:M13-8(L1)	HEAT	HEAT	1:M13-8 1ST FL S.W. PUMP ROOM	1:13-8
1:M13-9(L1)	HEAT	HEAT	1:M13-9 1ST FL S.W. PUMP ROOM	1:13-9
1:M13-10(L1)	HEAT	HEAT	1:M13-10 1ST FLELEC RM BY ED HALL W	1:13-10
1:M13-11(L1)	PHOTO	SMOKE	1:M13-11 1ST FL EAST DIETARY DOCK	1:13-11
1:M13-12(L1)	IAM	FIRE	1:M13-12 1ST FL MAIN KITCHEN HOOD	1:13-12
1:M13-13			SPARE	1:13-13
1:M13-14(L1)	PHOTO	SMOKE	1:M13-14 1ST FL ELECTRICAL 1E-4902B E	1:13-14
1:M13-15(L1)	PHOTO	SMOKE	1:M13-15 1ST FL ELECTRICAL 1E-4902B W	1:13-15
1:M13-16			SPARE	1:13-16
1:M13-17			SPARE	1:13-17
1:M13-18(L1)	ADRPUL	PULL	1:M13-18 FL 1E DIETARY LOADING DOCK	1:13-18
1:M13-19(L1)	ADRPUL	PULL	1:M13-19 FL 1 CHILLERRM S.E. CORNER	1:13-19
1:M13-20(L1)	ADRPUL	PULL	1:M13-20 FL 1 MAIN ELECT ROOM	1:13-20
1:M13-21(L1)	ADRPUL	PULL	1:M13-21 FL 1 GENERATOR ROOM	1:13-21
1:M13-22(L1)	ADRPUL	PULL	1:M13-22 FL 1 CENTRAL UNITILY PLANT EAST	1:13-22
1:M13-23(L1)	ADRPUL	PULL	1:M13-23 FL 1 CENTRAL UTILITY PLANT S.W.	1:13-23
1:M13-24(L1)	ADRPUL	PULL	1:M13-24 FL 1 S.W. PUMP ROOM N. WALL	1:13-24
1:M13-25(L1)	ADRPUL	PULL	1:M13-25 FL 1 S.W. PUMP ROOM S. WALL	1:13-25
1:M13-26			SPARE	1:13-26
1:M13-27			SPARE	1:13-27
1:M13-28			SPARE	1:13-28
1:M13-29			SPARE	1:13-29
1:M13-30			SPARE	1:13-30
1:M13-31			SPARE	1:13-31
1:M13-32			SPARE	1:13-32
1:M13-33			SPARE	1:13-33
1:M13-34			SPARE	1:13-34
1:M13-35			SPARE	1:13-35
1:M13-36			SPARE	1:13-36
1:M13-37			SPARE	1:13-37
1:M13-38			SPARE	1:13-38
1:M13-39			SPARE	1:13-39
1:M13-40			SPARE	1:13-40
1:M13-41			SPARE	1:13-41
1:M13-42			SPARE	1:13-42
1:M13-43			SPARE	1:13-43
1:M13-44			SPARE	1:13-44
1:M13-45			SPARE	1:13-45
1:M13-46			SPARE	1:13-46
1:M13-47			SPARE	1:13-47
1:M13-48			SPARE	1:13-48
1:M13-49			SPARE	1:13-49
1:M13-50			SPARE	1:13-50
1:M13-51			SPARE	1:13-51
1:M13-52			SPARE	1:13-52
1:M13-53			SPARE	1:13-53
1:M13-54			SPARE	1:13-54
1:M13-55			SPARE	1:13-55
1:M13-56			SPARE	1:13-56
1:M13-57			SPARE	1:13-57
1:M13-58			SPARE	1:13-58
1:M13-59			SPARE	1:13-59
1:M13-60(L2)	**PHOTO**	**VSMOKE**	**1ST FL E.D. CORR 0002 NORTH**	1:13-60
1:M13-61(L2)	**PHOTO**	**VSMOKE**	**1ST FL E.D. EXAM 40 1017**	1:13-61
1:M13-62(L2)	**PHOTO**	**VSMOKE**	**1ST FL E.D. EXAM 39 1018**	1:13-62
1:M13-63(L2)	**PHOTO**	**VSMOKE**	**1ST FL E.D. EXAM 38 1019**	1:13-63
1:M13-64(L2)	**PHOTO**	**VSMOKE**	**1ST FL E.D. EXAM 42 1015**	1:13-64
1:M13-65(L2)	**PHOTO**	**VSMOKE**	**1ST FL E.D. SUB-WAITING 1005A**	1:13-65
1:M13-66(L2)	**PHOTO**	**VSMOKE**	**1ST FL E.D. CORR 0002 SOUTH**	1:13-66
1:M13-67(L2)	**PHOTO**	**VSMOKE**	**1ST FL E.D. EXAM 37 1013**	1:13-67
1:M13-68(L2)	**PHOTO**	**VSMOKE**	**1ST FL E.D. CORR 0001 WEST**	1:13-68
1:M13-69(L2)	**PHOTO**	**VSMOKE**	**1ST FL E.D. TRIAGE 2/ PROV 1008**	1:13-69
1:M13-70(L2)	**PHOTO**	**VSMOKE**	**1ST FL E.D. RME RN 1010 WEST**	1:13-70
1:M13-71(L2)	**PHOTO**	**VSMOKE**	**1ST FL E.D. TRIAGE 1 1006**	1:13-71
1:M13-72(L2)	**PHOTO**	**VSMOKE**	**1ST FL E.D. XME 4 1005**	1:13-72
1:M13-73(L2)	**PHOTO**	**VSMOKE**	**1ST FL E.D. RME RN 1010 NORTH**	1:13-73
1:M13-74(L2)	**PHOTO**	**VSMOKE**	**1ST FL E.D. RME RN 1010 EAST**	1:13-74
1:M13-75(L2)	**PHOTO**	**VSMOKE**	**1ST FL E.D. XME1 1002**	1:13-75
1:M13-76(L2)	**PHOTO**	**VSMOKE**	**1ST FL E.D. XME 2 1003**	1:13-76
1:M13-77(L2)	**PHOTO**	**VSMOKE**	**1ST FL E.D. XME 3 1004**	1:13-77
1:M13-78(L2)	**PHOTO**	**VSMOKE**	**1ST FL E.D. DC/REG 1009**	1:13-78
1:M13-79(L2)	**PHOTO**	**VSMOKE**	**1ST FL E.D. RECEPTION 1011**	1:13-79
1:M13-80(L2)	**PHOTO**	**VSMOKE**	**1ST FL E.D. CORR 0001 EAST**	1:13-80
1:M13-81(L2)	**PHOTO**	**VSMOKE**	**1ST FL E.D. QUEING 1001 SOUTH**	1:13-81
1:M13-82(L2)	**ADRPUL**	**PULL**	**1ST FL E.D. QUEING 1001 SOUTH**	1:13-82
1:M13-83(L2)	**PHOTO**	**VSMOKE**	**1ST FL E.D. QUEING 1001 WEST**	1:13-83
1:M13-84(L2)	**ADRPUL**	**PULL**	**1ST FL E.D. QUEING 1001 CENTER**	1:13-84
1:M13-85(L2)	**PHOTO**	**VSMOKE**	**1ST FL E.D. QUEING 1001 CENTER**	1:13-85
1:M13-86(L2)	**PHOTO**	**VSMOKE**	**1ST FL E.D. QUEING 1001 NORTH**	1:13-86
1:M13-87(L2)	**PHOTO**	**VSMOKE**	**1ST FL E.D. WAITING 1012**	1:13-87
1:M13-88(L2)	**RPHOTO**	**LSDUCT**	**1ST FL E.D. QUEING 1001 BCU-1 SUP**	1:13-88
1:M13-89			SPARE	1:13-89
THRU				
1:M13-250			SPARE	1:13-250

NOTE: THE LABELS SHOWN ABOVE WILL BE USED FOR PROGRAMMING PURPOSES.
THE LABELS ARE BASED UPON INFORMATION SHOWN ON THE ARCHITECTURAL DRAWINGS.
ANY CHANGES TO THESE LABELS MUST BE NOTED ON THE SUBMITTAL REVIEW, PRIOR TO PROGRAMMING.
POINTS SHOWN IN ITALIC TEXT REFER TO EXISTING DEVICES.

PANEL CALCULATIONS NOTES:

1. THE INFORMATION OR SYMBOLS SHOWN IN BOLD LINETYPE ARE NEW OR RELOCATED.
2. THE INFORMATION OR SYMBOLS SHOWN IN LIGHT LINETYPE ARE EXISTING TO REMAIN.

KEYNOTES:

⟨1⟩ DEVICE(S) REMOVED FROM CIRCUIT. DEVICE QUANTITY CHANGED.

⟨2⟩ INTERIM HEAT DETECTOR.TO BE REMOVED AND REPLACED WITH EXISTING SMOKE DETECTOR AFTER CONSTRUCTION.

City of Aurora Building Division
Reviewed for Code Compliance
Approved as Noted: Rich Tenorio
Date: Oct 11, 2024
2021 INTERNATIONAL CODES & 2023 NEC

Johnson Controls
DISTRICT - 419
14200 E. EXPOSITION AVE
AURORA, CO 80012
SERVICE: 303-355-0500
PHONE: 303-355-0500
FAX: 303-355-0615

NICET CERTIFICATION INFORMATION
CALE RAUCH
NICET Fire Alarm, III
Certification #151588
Valid Through: 12/01/25
08/20/2024

THE MEDICAL CENTER OF AURORA - SOUTH ED ENTRY AND TRIAGE RENOVATION

THE MEDICAL CENTER OF AURORA - SOUTH
1501 SOUTH POTOMAC STREET
AURORA, COLORADO 80012

Revisions shown with symbol

ISSUE LOG: MARK	DATE	CAD	CHK	DESCRIPTION

FOR PERMIT

DRAWN BY:	CCD
CHECKED BY:	CBR
ISSUE DATE:	8/14/24
JOB #:	
PROJECT #:	419:650521647

JOHNSON CONTROLS © 2024

SYSTEM: FIRE ALARM SYSTEM

SHEET: NODE-1 4100U FACP CALCULATIONS AND SCHEDULES BUILDOUT

FA-603

FILE PATH: C:\Users\jdixonc4\OneDrive - Johnson Controls\Medical Center of Aurora\1501 S Potomac - Aurora South\South Tower - Node 1\43-1st ED Entry & Triage Reno - 2024 - 650521647\Fire\FA-601.dwg
LAST SAVED BY: JDIXONC4
LAST PRINTED: 8/20/2024 11:41:01 AM
30" x 42" - Arch E1 Size

© Johnson Controls 2024. All rights reserved. Reuse, copying, modification or alteration of the drawings and other information contained herein is strictly prohibited.

PANEL CALCULATIONS NOTES:

1. THE INFORMATION OR SYMBOLS SHOWN IN BOLD LINETYPE ARE NEW OR RELOCATED.
2. THE INFORMATION OR SYMBOLS SHOWN IN LIGHT LINETYPE ARE EXISTING TO REMAIN.

KEYNOTES:

(1) DEVICE(S) REMOVED FROM CIRCUIT. DEVICE QUANTITY CHANGED.

(2) INTERIM HEAT DETECTOR.TO BE REMOVED AND REPLACED WITH EXISTING SMOKE DETECTOR AFTER CONSTRUCTION.

City of Aurora Building Division
Reviewed for Code Compliance
Approved as Noted: Rich Tenorio
Date: Oct 11, 2024
2021 INTERNATIONAL CODES & 2023 NEC

MEDICAL CENTER OF AURORA SOUTH TOWER NODE 1 FACP 4100u FACP VOLTAGE DROPS

WIRE RESISTANCE BASED ON TABLE 8 FROM NATIONAL ELECTRICAL CODE (UNCOATED SOLID COPPER WIRE) @ 75 Celsius

NOTIFICATION CIRCUIT DESCRIPTION	Power Supply	Panel Circuit	Plan Ckt.	Dist. (D) Feet	Wire Gauge	Wire Res. / Ft. (R)	Total Alarm (A)	V. Drop (A*2D*R)	Volt @ End	% Volt Drop	29V Boost Current	Min Device Voltage	Max Distance / PID	4903-9219	4903-9292 (1)	4904-9137	CH70-24MCW-FR	RSS-24MCW-FR	4906-9101	4906-9101	4009-9001	CH70-241575W-FR (V)	CH70-241575W-FR (C)	4906-9105	Circuit Capacity (Amps)	Minimum Voltage @ NAC Output Terminals	Spare Circuit / Branch Capacity	Device Quantity Per Circuit/ Branch
													Setting	15cd	15cd	15cd	15cd	15cd	15cd	75cd		15cd	CHIME	15cd				
													Device Type	A/V	C/V	V/O	MC A/V	MC V/O	MC V/O	MC V/O		V/O	C/O	WP V/O				
													Supv. Current	0.0000	0.0000	0.0000	0.0000	0.0000	0.0000	0.0000	0.0000	0.0000	0.0000	0.0000				
													Alarm Current	0.0220	0.0700	0.0900	0.0820	0.0600	0.0600	0.1860	0.0150	0.0410	0.0220	0.0770				
													Alarm Current @ 23 Volts	0.0220	0.0700	0.0900	0.0820	0.0600	0.0600	0.1860	0.0150	0.0410	0.0220	0.0770				
1ST FLOOR EAST CHIMES/STROBES N1:SIG3	PS-1	SIG3	1:SIG3	500	14ga	0.0031	0.450	1.382	18.119	7.08%	0.0000	16vdc	1267 Ft.			5									3.A	19.5	60.5%	5
RADIOLOGY/SURGERY HALLS N1:SIG4	PS-1	SIG4	1:SIG4	500	14ga	0.0031	0.450	1.382	18.119	7.08%	0.0000	16vdc	1267 Ft.			5									3.A	19.5	60.5%	5
2ND FLOOR CHIMES/STROBES N1:SIG5	PS-1	SIG5	1:SIG5	600	14ga	0.0031	0.450	1.658	17.842	8.50%	0.0000	16vdc	1267 Ft.			5									3.A	19.5	52.6%	5
3RD FLOOR CHIMES/STROBES N1:SIG6	PS-1	SIG6	1:SIG6	700	14ga	0.0031	0.450	1.934	17.566	9.92%	0.0000	16vdc	1267 Ft.			5									3.A	19.5	44.7%	5
4TH FLOOR CHIMES/STROBES N1:SIG7	PS-1	SIG7	1:SIG7	800	14ga	0.0031	0.450	2.210	17.290	11.34%	0.0000	16vdc	1267 Ft.			5									3.A	19.5	36.8%	5
5TH FLOOR CHIMES/STROBES N1:SIG8	PS-1	SIG8	1:SIG8	900	14ga	0.0031	0.450	2.487	17.013	12.75%	0.0000	16vdc	1267 Ft.			5									3.A	19.5	29.0%	5
SURGERY CHIMES/STROBES N1:SIG9	PS-1	SIG9	1:SIG9	500	14ga	0.0031	0.450	1.382	18.119	7.08%	0.0000	16vdc	1267 Ft.			5									3.A	19.5	60.5%	5
LAB HALL CHIMES/STROBES N1:SIG10	PS-1	SIG10	1:SIG10	500	14ga	0.0031	0.450	1.382	18.119	7.08%	0.0000	16vdc	1267 Ft.			5									3.A	19.5	60.5%	5
CENT SPLY/MATERIALS MGMT N1:SIG11	PS-1	SIG11	1:SIG11	500	14ga	0.0031	0.450	1.382	18.119	7.08%	0.0000	16vdc	1267 Ft.			5									3.A	19.5	60.5%	5
EMERGENCY ROOM STROBES N1:SIG12	PS-1	SIG12	1:SIG12	0	14ga	0.0031	0.000	0.000	19.500	0.00%	0.0000	16vdc	0 Ft.												3.A	19.5	100.0%	0
EMERGENCY RM HALL STROBES N1:SIG13	PS-1	SIG13	1:SIG13	500	14ga	0.0031	0.450	1.382	18.119	7.08%	0.0000	16vdc	1267 Ft.			5									3.A	19.5	60.5%	5
1ST FLOOR CENTRAL STROBES N1:SIG14	PS-1	SIG14	1:SIG14	500	14ga	0.0031	0.450	1.382	18.119	7.08%	0.0000	16vdc	1267 Ft.			5									3.A	19.5	60.5%	5
N1:SIG15 CENT SPLY/MATERIAL CHIME	PS-2	SIG15	1:SIG15	500	14ga	0.0031	0.350	1.075	18.426	5.51%	0.0000	16vdc	1629 Ft.		5										3.A	19.5	69.3%	5
N1:SIG16 EMERGENCY ROOM CHIMES	PS-2	SIG16	1:SIG16	500	14ga	0.0031	0.350	1.075	18.426	5.51%	0.0000	16vdc	1629 Ft.		5										3.A	19.5	69.3%	5
N1:SIG17 EMERGENCY RM HALL CHIMES	PS-2	SIG17	1:SIG17	500	14ga	0.0031	0.350	1.075	18.426	5.51%	0.0000	16vdc	1629 Ft.		5										3.A	19.5	69.3%	5
N1:SIG18 1ST FLOOR CENTRAL CHIMES	PS-2	SIG18	1:SIG18	500	14ga	0.0031	0.350	1.075	18.426	5.51%	0.0000	16vdc	1629 Ft.		5										3.A	19.5	69.3%	5
N1:SIG19 CHIMES C6-1	PS-2	SIG19	1:SIG19	1000	14ga	0.0031	0.350	2.149	17.351	11.02%	0.0000	16vdc	1629 Ft.		5										3.A	19.5	38.6%	5
N1:SIG20 CHIMES C5-1, S6-5, S6-6	PS-2	SIG20	1:SIG20	827	14ga	0.0031	0.340	1.726	17.774	8.85%	0.0000	16vdc	1677 Ft.		1	3									3.A	19.5	50.7%	4
N1:SIG21 STROBES S6-1	PS-2	SIG21	1:SIG21	1000	14ga	0.0031	0.450	2.763	16.737	14.17%	0.0000	16vdc	1267 Ft.			5									3.A	19.5	21.1%	5
N1:SIG22 STROBES S6-2	PS-2	SIG22	1:SIG22	1000	14ga	0.0031	0.450	2.763	16.737	14.17%	0.0000	16vdc	1267 Ft.			5									3.A	19.5	21.1%	5
N1:SIG23 CHIMES C3,4-1	PS-2	SIG23	1:SIG23	700	14ga	0.0031	0.372	1.599	17.901	8.20%	0.0000	16vdc	1532 Ft.							2					3.A	19.5	54.3%	2
N1:SIG24 STROBES S3-1	PS-2	SIG24	1:SIG24	700	14ga	0.0031	0.360	1.547	17.953	7.93%	0.0000	16vdc	1583 Ft.			4									3.A	19.5	55.8%	4
N1:SIG25 STROBES S3-2	PS-2	SIG25	1:SIG25	0	14ga	0.0031	0.000	0.000	19.500	0.00%	0.0000	16vdc	0 Ft.		0	0									3.A	19.5	100.0%	0
N1:SIG26 CHIME C2-1	**PS-2**	**SIG26**	**1:SIG26**	**330**	**14ga**	**0.0031**	**0.350**	**0.709**	**18.791**	**3.64%**	**0.0000**	**16vdc**	**1629 Ft.**		**5**										**3.A**	**19.5**	**79.7%**	**5**
N1:SIG27 SPARE	PS-2	SIG27	1:SIG27	0	14ga	0.0031	0.000	0.000	19.500	0.00%	0.0000	16vdc	0 Ft.												3.A	19.5	100.0%	0
N1:SIG28 STROBES SP6-2	PS-2	SIG28	1:SIG28	600	14ga	0.0031	0.450	1.658	17.842	8.50%	0.0000	16vdc	1267 Ft.			5									3.A	19.5	52.6%	5
N1:SIG29 4009 SP6-2,S2-4,1ST CENT ELEV#6	**PS-2**	**SIG29**	**1:SIG29**	**300**	**14ga**	**0.0031**	**0.355**	**0.654**	**18.846**	**3.35%**	**0.0000**	**16vdc**	**1606 Ft.**		**1**	3					1				**3.A**	**19.5**	**81.3%**	**5**
N1:SIG30 STROBES 4009A SOUTH PHARMACY	PS-2	SIG30	1:SIG30	350	14ga	0.0031	0.015	0.032	19.468	0.17%	0.0000	16vdc	38002 Ft.								1				3.A	19.5	99.1%	1
N1:SIG31 SPARE S5-2	PS-2	SIG31	1:SIG31	0	14ga	0.0031	0.000	0.000	19.500	0.00%	0.0000	16vdc	0 Ft.												3.A	19.5	100.0%	0
N1:SIG32 ELECTRICAL 1E-4902B STROBE	PS-2	SIG32	1:SIG32	350	14ga	0.0031	0.060	0.129	19.371	0.66%	0.0000	16vdc	9501 Ft.						1						3.A	19.5	96.3%	1
N1:SIG33 STROBE S6-3	PS-2	SIG33	1:SIG33	1000	14ga	0.0031	0.180	1.105	18.395	5.67%	0.0000	16vdc	3167 Ft.			2									3.A	19.5	68.4%	2
N1:SIG34 STROBE S6-4	PS-2	SIG34	1:SIG34	1000	14ga	0.0031	0.090	0.553	18.947	2.83%	0.0000	16vdc	6334 Ft.			1									3.A	19.5	84.2%	1
N1:SIG35 STROBE S2-3	PS-2	SIG35	1:SIG35	600	14ga	0.0031	0.910	3.352	16.148	17.19%	0.0000	16vdc	626 Ft.		4	7									3.A	19.5	4.2%	11
N1:SIG36 STROBE S2-1	**PS-2**	**SIG36**	**1:SIG36**	**500**	**14ga**	**0.0031**	**0.550**	**1.689**	**17.812**	**8.66%**	**0.0000**	**16vdc**	**1036 Ft.**		**4**	3									**3.A**	**19.5**	**51.7%**	**7**
N1:SIG37 STROBE S2-2	PS-2	SIG37	1:SIG37	460	14ga	0.0031	0.890	2.514	16.986	12.89%	0.0000	16vdc	640 Ft.		5	6									3.A	19.5	28.1%	11
N1:SIG38 SPARE	PS-2	SIG38	1:SIG38	0	14ga	0.0031	0.000	0.000	19.500	0.00%	0.0000	16vdc	0 Ft.												3.A	19.5	100.0%	0
N1:SIG39 STROBE OUTSIDE SIAMESE	PS-3	SIG39	1:SIG39	1000	14ga	0.0031	0.060	0.368	19.132	1.89%	0.0000	16vdc	9501 Ft.					1							3.A	19.5	89.5%	1
N1:SIG40 HORN OUTSIDE SIAMESE	PS-3	SIG40	1:SIG40	1000	14ga	0.0031	0.254	1.560	17.940	8.00%	0.0000	16vdc	2244 Ft.			1	2								3.A	19.5	55.4%	3
N1:SIG41 SPARE	PS-3	SIG41	1:SIG41	0	14ga	0.0031	0.000	0.000	19.500	0.00%	0.0000	16vdc	0 Ft.												3.A	19.5	100.0%	0
N1:SIG42 CHIME 1ST FLOOR CENTRAL	PS-3	SIG42	1:SIG42	500	14ga	0.0031	0.360	1.105	18.395	5.67%	0.0000	16vdc	1583 Ft.			4									3.A	19.5	68.4%	4
N1:SIG43 BASEMENT EVS DEPT STROBE CKT	PS-3	SIG43	1:SIG43	600	14ga	0.0031	0.090	0.332	19.168	1.70%	0.0000	16vdc	6334 Ft.			1									3.A	19.5	90.5%	1
N1:SIG44 SPARE	PS-3	SIG44	1:SIG44		14ga	0.0031	0.000	0.000	19.500	0.00%	0.0000	16vdc	0 Ft.												3.A	19.5	100.0%	0
N1:SIG45 BASEMENT	PS-3	SIG45	1:SIG45	600	14ga	0.0031	0.712	2.623	16.877	13.45%	0.0000	16vdc	801 Ft.		9		1								3.A	19.5	25.1%	10
N1:SIG46 STROBES MATERIAL MANAGEMENT	PS-3	SIG46	1:SIG46	600	14ga	0.0031	0.372	1.370	18.130	7.03%	0.0000	16vdc	1532 Ft.							2					3.A	19.5	60.8%	2
N1:SIG47 BASEMENT CORRIDOR	PS-3	SIG47	1:SIG47	488	14ga	0.0031	0.982	2.942	16.558	15.09%	0.0000	16vdc	580 Ft.		9	3	1								3.A	19.5	15.9%	13
N1:SIG48 SPARE	PS-3	SIG48	1:SIG48		14ga	0.0031	0.000	0.000	19.500	0.00%	0.0000	16vdc	0 Ft.												3.A	19.5	100.0%	0
N1:SIG49 S9-1 BLOOD W.& SURG DOC OFFICES	PS-3	SIG49	1:SIG49	900	14ga	0.0031	0.044	0.243	19.257	1.25%	0.0000	16vdc	12955 Ft.	2											3.A	19.5	93.1%	2
N1:SIG50 S9-2 BLOOD LAB EAST	PS-3	SIG50	1:SIG50	900	14ga	0.0031	0.044	0.243	19.257	1.25%	0.0000	16vdc	12955 Ft.	2											3.A	19.5	93.1%	2
N1:SIG51 ADMITING SOUTH	PS-3	SIG51	1:SIG51	1000	14ga	0.0031	0.044	0.270	19.230	1.39%	0.0000	16vdc	12955 Ft.	2											3.A	19.5	92.3%	2
N1:SIG52 ADMITING NORTH	PS-3	SIG52	1:SIG52	1000	14ga	0.0031	0.022	0.135	19.365	0.69%	0.0000	16vdc	25911 Ft.	1											3.A	19.5	96.1%	1
N1:SIG53 ADMITING CHIME	PS-3	SIG53	1:SIG53	1000	14ga	0.0031	0.022	0.135	19.365	0.69%	0.0000	16vdc	25911 Ft.	1											3.A	19.5	96.1%	1
N1:SIG54 SPARE	PS-3	SIG54	1:SIG54		14ga	0.0031	0.000	0.000	19.500	0.00%	0.0000	16vdc	0 Ft.												3.A	19.5	100.0%	0
N1:SIG55 C7-9-1 BLOOD LAB SURGERY PREP	PS-3	SIG55	1:SIG55	1000	14ga	0.0031	0.022	0.135	19.365	0.69%	0.0000	16vdc	25911 Ft.	1											3.A	19.5	96.1%	1
N1:SIG56 SPARE	PS-3	SIG56	1:SIG56		14ga	0.0031	0.000	0.000	19.500	0.00%	0.0000	16vdc	0 Ft.												3.A	19.5	100.0%	0
N1:SIG57 S1,3 KITCHEN AND SLEEP ROOMS	PS-3	SIG57	1:SIG57	900	14ga	0.0031	0.022	0.122	19.378	0.62%	0.0000	16vdc	25911 Ft.	1											3.A	19.5	96.5%	1
N1:SIG58 S1,4 GIFT SHOP & ELEVATOR AREA	PS-3	SIG58	1:SIG58	900	14ga	0.0031	0.350	1.934	17.566	9.92%	0.0000	16vdc	1629 Ft.		5										3.A	19.5	44.7%	5
N1:SIG59 S8,3 SURGERY PREP AND HOLDING	PS-3	SIG59	1:SIG59	900	14ga	0.0031	0.350	1.934	17.566	9.92%	0.0000	16vdc	1629 Ft.		5										3.A	19.5	44.7%	5
N1:SIG60 S7,1 SURGERY PREP	PS-3	SIG60	1:SIG60	900	14ga	0.0031	0.350	1.934	17.566	9.92%	0.0000	16vdc	1629 Ft.		5										3.A	19.5	44.7%	5
N1:SIG61 S7,2 SURGERY PREP	PS-3	SIG61	1:SIG61	900	14ga	0.0031	0.140	0.774	18.726	3.97%	0.0000	16vdc	4072 Ft.		2										3.A	19.5	77.9%	2
N1:SIG62 SPARE	PS-3	SIG62	1:SIG62		14ga	0.0031	0.000	0.000	19.500	0.00%	0.0000	16vdc	0 Ft.												3.A	19.5	100.0%	0
1:SIG63 CHIMES 2ND FLOOR TOWER C3-1	PS-4	SIG63	1:SIG63	1000	14ga	0.0031	0.560	3.438	16.062	17.63%	0.0000	16vdc	1018 Ft.		8										3.A	19.5	1.8%	8
1:SIG64 STROBES 2ND FLOOR TOWER S3-1	PS-4	SIG64	1:SIG64	530	14ga	0.0031	0.840	2.734	16.766	14.02%	0.0000	16vdc	679 Ft.		3	7									3.A	19.5	21.9%	10
1:SIG65 STROBES 2ND FLOOR TOWER S3-2	PS-4	SIG65	1:SIG65	522	14ga	0.0031	0.950	3.045	16.455	15.61%	0.0000	16vdc	600 Ft.		2	9									3.A	19.5	13.0%	11
SPARE	PS-4	SIG66	1:SIG66		14ga	0.0031	0.000	0.000	19.500	0.00%	0.0000	16vdc	0 Ft.												3.A	19.5	100.0%	0
1:SIG67 STROBES 3RD FLOOR TOWER S4-1	PS-4	SIG67	1:SIG67	437	14ga	0.0031	0.840	2.254	17.246	11.56%	0.0000	16vdc	679 Ft.		3	7									3.A	19.5	35.6%	10
1:SIG68 STROBES 3RD FLOOR TOWER S4-2	PS-4	SIG68	1:SIG68	413	14ga	0.0031	1.050	2.663	16.837	13.65%	0.0000	16vdc	543 Ft.		6	7									3.A	19.5	23.9%	13
1:SIG69 CHIMES 4TH FLOOR	PS-4	SIG69	1:SIG69		14ga	0.0031	0.015	0.000	19.500	0.00%	0.0000	16vdc	38002 Ft.								1				3.A	19.5	99.5%	1
1:SIG70 STROBES 1ST FLOOR	PS-4	SIG70	1:SIG70	530	14ga	0.0031	0.840	2.734	16.766	14.02%	0.0000	16vdc	679 Ft.		3	7									3.A	19.5	21.9%	10
1:SIG71 STROBES 1ST FLOOR	PS-4	SIG71	1:SIG71	522	14ga	0.0031	0.950	3.045	16.455	15.61%	0.0000	16vdc	600 Ft.		2	9									3.A	19.5	13.0%	11
1:SIG72 CHIMES 3RD FLOOR C5-1	PS-4	SIG72	1:SIG72	494	14ga	0.0031	0.630	1.911	17.589	9.80%	0.0000	16vdc	905 Ft.		9										3.A	19.5	45.4%	9
1:SIG73 STROBES 4TH FLOOR	PS-4	SIG73	1:SIG73		14ga	0.0031	0.015	0.000	19.500	0.00%	0.0000	16vdc	38002 Ft.								1				3.A	19.5	99.5%	1
SPARE	PS-4	SIG74	1:SIG74		14ga	0.0031	0.000	0.000	19.500	0.00%	0.0000	16vdc	0 Ft.												3.A	19.5	100.0%	0
1:SIG75 1ST FLOOR CHIME	PS-4	SIG75	1:SIG75	100	14ga	0.0031	0.560	0.344	19.156	1.76%	0.0000	16vdc	1018 Ft.		8										3.A	19.5	81.3%	8
1:SIG76 2ND FLOOR TOWER S3-3	PS-4	SIG76	1:SIG76	670	14ga	0.0031	0.840	3.456	16.044	17.72%	0.0000	16vdc	679 Ft.		3	7									3.A	19.5	1.3%	10
SPARE	PS-4	SIG77	1:SIG77		14ga	0.0031	0.000	0.000	19.500	0.00%	0.0000	16vdc	0 Ft.												3.A	19.5	100.0%	0
SPARE	PS-4	SIG78	1:SIG78		14ga	0.0031	0.000	0.000	19.500	0.00%	0.0000	16vdc	0 Ft.												3.A	19.5	100.0%	0
SPARE	PS-4	SIG79	1:SIG79		14ga	0.0031	0.000	0.000	19.500	0.00%	0.0000	16vdc	0 Ft.												3.A	19.5	100.0%	0
SPARE	PS-4	SIG80	1:SIG80		14ga	0.0031	0.000	0.000	19.500	0.00%	0.0000	16vdc	0 Ft.												3.A	19.5	100.0%	0
N1ISIG102 SPARE	XPS-1	SIG81	1:SIG81	1000	14ga	0.0031	0.186	1.142	18.358	5.86%	0.0000	16vdc	3065 Ft.							1					3.A	19.5	67.4%	1
N1:SIG103 SPARE	XPS-1	SIG82	1:SIG82		14ga	0.0031	0.000	0.000	19.500	0.00%	0.0000	16vdc	0 Ft.												3.A	19.5	100.0%	0

NOTE:
LUMP SUM METHOD WAS USED TO CALCULATE ALLOWABLE VOLTAGE DROP. THIS METHOD ALLOWS FOR A SMALL MARGIN OF SAFETY, TAKING INTO CONSIDERATION THAT THE ACTUAL INSTALLED CIRCUIT ROUTING MAY DIFFER FROM WHAT IS SHOWN ON THE SHOP DRAWINGS. IF THE ACTUAL CIRCUIT LENGTH IS GOING TO EXCEED THE MAXIMUM ALLOWABLE CIRCUIT LENGTH, CONTACT YOUR LOCAL JOHNSON CONTROLS DISTRICT OFFICE.

Johnson Controls
DISTRICT - 419
14200 E. EXPOSITION AVE
AURORA, CO 80012
SERVICE: 303-355-0500
PHONE: 303-355-0500
FAX: 303-355-0615

NICET CERTIFICATION INFORMATION
CALE RAUCH
NICET Fire Alarm, III
Certification #151588
Valid Through: 12/01/25
08/20/2024

THE MEDICAL CENTER OF AURORA - SOUTH ED ENTRY AND TRIAGE RENOVATION

THE MEDICAL CENTER OF AURORA - SOUTH
1501 SOUTH POTOMAC STREET
AURORA, COLORADO 80012

Revisions shown with symbol

ISSUE LOG: MARK	DATE	CAD	CHK	DESCRIPTION

FOR PERMIT

DRAWN BY:	CCD
CHECKED BY:	CBR
ISSUE DATE:	8/14/24
JOB #:	
PROJECT #:	419:650521647

JOHNSON CONTROLS © 2024

SYSTEM: **FIRE ALARM SYSTEM**

SHEET: **NODE-1 4100U FACP CALCULATIONS AND SCHEDULES BUILDOUT CONTINUED**

FA-604

FILE PATH: C:\Users\jdixonc4\OneDrive - Johnson Controls\Medical Center of Aurora\1501 S Potomac - Aurora South\South Tower - Node 1\43-1st ED Entry & Triage Reno - 2024 - 650521647\Fire\FA-601.dwg
LAST SAVED BY: JDIXONC4
LAST PRINTED: 8/20/2024 11:41:02 AM
30" x 42" - Arch E1 Size

© Johnson Controls 2024. All rights reserved. Reuse, copying, modification or alteration of the drawings and other information contained herein is strictly prohibited.

MEDICAL CENTER OF AURORA SOUTH TOWER NODE 1 FACP - EPS-1 CIRCUIT SUMMARY & VOLTAGE DROP

Channel	Description	Alarm Current	% Drop	Unit Load*	Wire Length	Spare Current	Spare VoltageDrop
1:A1:1	3RD FLR A-TOWER SOUTH-EAST	2.566A	15.37%	34	800	14%	26%
1:A1:2	3RD FLR A-TOWER NORTH-WEST	2.600A	12.76%	39	1,052	13%	38%
1:A1:3	**1ST FLR SC1A & SC1B E.D.**	**2.244A**	**10.03%**	**47**	**1,057**	**25%**	**48%**
EPR1	**1ST FLR SC1A E.D. EAST**	**1.280A**	**1.90%**	**18**	**257**	**57%**	**90%**

ENHANCED POWER SUPPLY 1 - CHANNEL 1

IDNac Address	Device Type	PID	Setting	Custom Label (Max 40 Characters)		SWITCH SETTINGS 1 2 3 4 5 6 7 8	
1:A1:1-1	AV	49MTV-WRF	15cd	3RD FL TWR A CORR 3MS52	:A1:1-1	X	ON
1:A1:1-2	AV	49MTV-WRF	15cd	3RD FL TWR A CORR 3MS53 N	:A1:1-2	X	ON
1:A1:1-3	VO	49VO-APPLC	15cd	3RD FL TWR A PUBLIC TLT 3AM00	:A1:1-3	X X	ON
1:A1:1-4	VO	49VO-APPLC	15cd	3RD FL TWR A OFFICE 3MS64	:A1:1-4	X	ON
1:A1:1-5	AV	49MTV-WRF	185cd	3RD FL TWR A SLEEP RM 3MS36A	:A1:1-5	X X	ON
1:A1:1-6	AV	49MTV-WRF	30cd	3RD FL TWR A WAITING RM 3AM01	:A1:1-6	X X	ON
1:A1:1-7	AV	49MTV-WRF	15cd	3RD FL TWR A CORR 3MS53 S	:A1:1-7	X X X	ON
1:A1:1-8	AV	49MTV-WRF	15cd	3RD FL TWR A CORR 3MS54 N	:A1:1-8	X	ON
1:A1:1-9	AV	49MTV-WRF	15cd	3RD FL TWR A CORR 3MS54 S	:A1:1-9	X X	ON
1:A1:1-10	AV	49MTV-WRF	15cd	3RD FL TWR A ELEV V705 LOBBY	:A1:1-10	X X	ON
1:A1:1-11	AV	49MTV-WRF	30cd	3RD FL TWR A MECH 3EG02	:A1:1-11	X X X	ON
1:A1:1-12	AV	49MTV-WRF	15cd	3RD FL TWR A CORR 3MS56 E	:A1:1-12	X X	ON
1:A1:1-13	VO	49VO-APPLC	30cd	3RD FL TWR A BIOHAZARD 3MS39	:A1:1-13	X X X	ON
1:A1:1-14	VO	49VO-APPLC	15cd	3RD FL TWR A DICTATION 3MS41B	:A1:1-14	X X X	ON
1:A1:1-15	AV	49MTV-WRF	15cd	3RD FL TWR A N/S 3MS41A	:A1:1-15	X X X X	ON
1:A1:1-16	AV	49MTV-WRF	30cd	3RD FL TWR A MECH 3EG03	:A1:1-16	X	ON
1:A1:1-17	VO	49VO-APPLC	15cd	3RD FL TWR A POU 3MS43	:A1:1-17	X X	ON
1:A1:1-18	VO	49VO-APPLC	15cd	3RD FL TWR A PANTRY 3MS42	:A1:1-18	X X	ON
1:A1:1-19	AV	49MTV-WRF	15cd	3RD FL TWR A CORR 3MS56 W	:A1:1-19	X X X	ON
1:A1:1-20	VO	49VO-APPLC	15cd	3RD FL TWR A ISO PAT RM 334	:A1:1-20	X X	ON
1:A1:1-21	VO	49VO-WRFO	15cd	3RD FL TWR A UNI SHWR 3MS01B	:A1:1-21	X X X	ON

ENHANCED POWER SUPPLY 1 - CHANNEL 2

IDNac Address	Device Type	PID	Setting	Custom Label (Max 40 Characters)		SWITCH SETTINGS 1 2 3 4 5 6 7 8	
1:A1:2-1	AV	49MTV-WRF	15cd	3RD FL TWR A STAFF LNG 3MS38	:A1:2-1	X	ON
1:A1:2-2	VO	49VO-APPLC	15cd	3RD FL TWR A CLEAN UTILITY 3MS40	:A1:2-2	X	ON
1:A1:2-3	AV	49MTV-WRF	15cd	3RD FL TWR A CORR 3MS53	:A1:2-3	X X	ON
1:A1:2-4	AV	49MTV-WRF	15cd	3RD FL TWR A CORR 3MS62 N	:A1:2-4	X	ON
1:A1:2-5	VO	49VO-APPLC	15cd	3RD FL TWR A DICTATION 3MS44	:A1:2-5	X X	ON
1:A1:2-6	VO	49VO-APPLC	15cd	3RD FL TWR A MEDS 3MS46	:A1:2-6	X X	ON
1:A1:2-7	VO	49VO-APPLC	15cd	3RD FL TWR A POU 3MS48	:A1:2-7	X X X	ON
1:A1:2-8	VO	49VO-APPLC	15cd	3RD FL TWR A EQ STOR 3MS049	:A1:2-8	X	ON
1:A1:2-9	AV	49MTV-WRF	15cd	3RD FL TWR A CORR 3MS61A	:A1:2-9	X	ON
1:A1:2-10	AV	49MTV-WRF	15cd	3RD FL TWR A CORR 3MS60	:A1:2-10	X	ON
1:A1:2-11	VO	49VO-APPLC	15cd	3RD FL TWR A SOILED UTIL 3MS050	:A1:2-11	X X	ON
1:A1:2-12	AV	49MTV-WRF	15cd	3RD FL TWR A CORR 3MS59 N	:A1:2-12	X	ON
1:A1:2-13	VO	49VO-APPLC	15cd	3RD FL TWR A ISO PAT RM 309	:A1:2-13	X X X	ON
1:A1:2-14	VO	49VO-APPLC	15cd	3RD FL TWR A ACC PAT TLT 309	:A1:2-14	X X X	ON
1:A1:2-15	AV	49MTV-WRF	15cd	3RD FL TWR A STAFF LNG 3MS22A	:A1:2-15	X X X X	ON
1:A1:2-16	VO	49VO-APPLC	15cd	3RD FL TWR A STAFF TLT 3MS22B	:A1:2-16	X	ON
1:A1:2-17	AV	49MTV-WRF	15cd	3RD FL TWR A CORR 3MS59 S	:A1:2-17	X	ON
1:A1:2-18	VO	49VO-APPLC	15cd	3RD FL TWR A OFFICE 3MS21	:A1:2-18	X	ON
1:A1:2-19	AV	49MTV-WRF	15cd	3RD FL TWR A CLEAN UTIL 3MS19	:A1:2-19	X X	ON
1:A1:2-20	VO	49VO-APPLC	15cd	3RD FL TWR A MEDS 3MS18	:A1:2-20	X	ON
1:A1:2-21	AV	49MTV-WRF	15cd	3RD FL TWR A CORR 3MS58A W	:A1:2-21	X X	ON
1:A1:2-22	AV	49MTV-WRF	15cd	3RD FL TWR A CORR 3MS58A E	:A1:2-22	X X X	ON
1:A1:2-23	VO	49VO-APPLC	15cd	3RD FL TWR A POU 3MS47	:A1:2-23	X X X	ON
1:A1:2-24	AV	49MTV-WRF	15cd	3RD FL TWR A CORR 3MS57	:A1:2-24	X X	ON
1:A1:2-25	VO	49VO-APPLC	15cd	3RD FL TWR A IDF 3MS45	:A1:2-25	X X X	ON
1:A1:2-26	AV	49MTV-WRF	15cd	3RD FL TWR A CORR 3MS62 S	:A1:2-26	X X X	ON

ENHANCED POWER SUPPLY 1 - CHANNEL 2

IDNac Address	Device Type	PID	Setting	Custom Label (Max 40 Characters)		SWITCH SETTINGS 1 2 3 4 5 6 7 8	
1:A1:3-1	ISO	4905-9929		1ST FL E.D. HALL 01 BY DOORS	:A1:3-1	X	ON
1:A1:3-2	VO	49VO-WRFO	15cd	1ST FL E.D. BATH 1E-5201A	:A1:3-2	X	ON
1:A1:3-3	AV	49MTV-WRF	15cd	1ST FL E.D. HALL 02 E BY RM 54	:A1:3-3	X X	ON
1:A1:3-4	VO	49VO-APPLC	15cd	1ST FL E.D. NURSE 5200	:A1:3-4	X	ON
1:A1:3-5	VO	49VO-WRF	15cd	1ST FL E.D. HALL 02 W BY RM 51	:A1:3-5	X X	ON
1:A1:3-6	**ISO**	**4905-9929**		**1ST FL E.D. CORR 0002 BY N DOORS**		X X	ON
1:A1:3-7	**AV**	**49MTV-WRF**	**15cd**	**1ST FL E.D. CORR 0002 NORTH**		X X X	ON
1:A1:3-8	**VO**	**49VO-APPLC**	**15cd**	**1ST FL E.D. EXAM 40 1017**		X	ON
1:A1:3-9	**VO**	**49VO-APPLC**	**15cd**	**1ST FL E.D. EXAM 39 1018**		X X	ON
1:A1:3-10	**VO**	**49VO-APPLC**	**15cd**	**1ST FL E.D. EXAM 38 1019**		X X	ON
1:A1:3-11	**VO**	**49VO-APPLC**	**15cd**	**1ST FL E.D. EXAM 42 1015**		X X X	ON
1:A1:3-12	**AV**	**49MTV-WRF**	**15cd**	**1ST FL E.D. SUB-WAITING 1005A**		X X	ON
1:A1:3-13	**AV**	**49MTV-WRF**	**15cd**	**1ST FL E.D. CORR 0002 SOUTH**		X X X	ON
1:A1:3-14	**VO**	**49VO-APPLC**	**15cd**	**1ST FL E.D. EXAM 37 1013**		X X X	ON
1:A1:3-15	**VO**	**49VO-WRF**	**15cd**	**1ST FL E.D. TLT 1016**		X X X X	ON
1:A1:3-16	**AV**	**49MTV-WRF**	**15cd**	**1ST FL E.D. CORR 0001 WEST**		X	ON
1:A1:3-17	**AV**	**49MTV-WRF**	**15cd**	**1ST FL E.D. DC/REG 1009**		X X X	ON
1:A1:3-18	**VO**	**49VOH-APPLCR**	**75cd**	**1ST FL E.D. TRIAGE 2/ PROVIDER 1008**		X X	ON
1:A1:3-19	**VO**	**49VO-WRF**	**15cd**	**1ST FL E.D. TLT 1007**		X X X	ON
1:A1:3-20	**AV**	**49MTV-WRF**	**15cd**	**1ST FL E.D. RME RN 1010 WEST**		X X	ON
1:A1:3-21	**VO**	**49VOH-APPLCR**	**75cd**	**1ST FL E.D. TRIAGE 1 1006**		X X X	ON
1:A1:3-22	**VO**	**49VO-APPLC**	**15cd**	**1ST FL E.D. XME 4 1005**		X X X	ON
1:A1:3-23	**AV**	**49MTV-WRF**	**15cd**	**1ST FL E.D. RME RN 1010 EAST**		X X X X	ON
1:A1:3-24	**VO**	**49VO-APPLC**	**15cd**	**1ST FL E.D. XME1 1002**		X X X	ON
1:A1:3-25	**VO**	**49VO-APPLC**	**15cd**	**1ST FL E.D. XME 2 1003**		X X X	ON
1:A1:3-26	**VO**	**49VO-APPLC**	**15cd**	**1ST FL E.D. XME 3 1004**		X X X	ON
1:A1:3-27	**AV**	**49MTV-WRF**	**15cd**	**1ST FL E.D. RECEPTION 1011**		X X X X	ON
1:A1:3-28	**VO**	**49VO-APPLC**	**15cd**	**1ST FL E.D. RME RN 1010 CENTER**		X X X	ON
1:A1:3-29	**REPEATER**	**4009-9601**		**1ST FL CORR 0001 EPR#1**		X X X X	ON
1:A1:3-30	**AV**	**49MTV-WRF**	**15cd**	**1ST FL E.D. CORR 0001 EAST**		X X X X	ON
1:A1:3-31	**AV**	**49MTV-WRF**	**15cd**	**1ST FL E.D. QUEING 1001 SOUTH**		X X X X X	ON
1:A1:3-32	**AV**	**49MTV-WRF**	**30cd**	**1ST FL E.D. VESTIBULE 1000**		X	ON
1:A1:3-33	**AV**	**49MTV-WRF**	**15cd**	**1ST FL E.D. QUEING 1001 WEST**		X X	ON
1:A1:3-34	**VO**	**49VO-APPLC**	**15cd**	**1ST FL E.D. QUEING 1001 AT DESK**		X X	ON
1:A1:3-35	**AV**	**49MTV-WRF**	**15cd**	**1ST FL E.D. QUEING 1001 CENTER**		X X X	ON
1:A1:3-36	**AV**	**49MTV-WRF**	**15cd**	**1ST FL E.D. QUEING 1001 NORTH**		X X	ON
1:A1:3-37	**AV**	**49MTV-WRF**	**15cd**	**1ST FL E.D. WAITING 1012 NORTH**		X X X	ON
1:A1:3-38	**AV**	**49MTV-WRF**	**15cd**	**1ST FL E.D. WAITING 1012 SOUTH**		X X X	ON
1:A1:3-39	**VO**	**49VO-WRF**	**15cd**	**1ST FL E.D. TLT 1012A**		X X X X	ON

1:A1:1 Notification SLC Distributed Load Voltage Drop

Starting Voltage: 29vdc
Min. Device Voltage: 23.vdc
Allowable % Drop: 20.7%

Primary Wire Gauge: 14ga
Home Run Wire Gauge: 14ga

Wire Res. Per Ft. 0.003070 @ 75° Celsius
Wire Res. Per Ft. 0.003070 @ 75° Celsius

Branch	Device #	From	Distance (Feet)	PID	Setting	Device Draw	Class B Calculations Current at Device	Voltage Drop	Voltage at Device	% Vdrop Wire Length
1	1:A1:1-1	PANEL	130	49MTV-WRF	15cd	0.1450	2.566	2.363	26.637	Branch 1: 15.37%
1	1:A1:1-2	1:A1:1-1	32	49MTV-WRF	15cd	0.1450	2.421	0.476	26.161	Length: 800
1	1:A1:1-3	1:A1:1-2	27	49VO-APPLC	15cd	0.0550	0.055	0.009	26.152	
1	TAP1	1:A1:1-2	23	JBOX		0.0000	2.221	0.314	25.847	
1	1:A1:1-4	TAP1	16	49VO-APPLC	15cd	0.0550	0.055	0.005	25.842	
1	1:A1:1-5	TAP1	39	49MTV-WRF	185cd	0.2990	0.299	0.072	25.776	
1	1:A1:1-6	TAP1	35	49MTV-WRF	30cd	0.1630	0.163	0.035	25.812	
1	1:A1:1-7	TAP1	46	49MTV-WRF	15cd	0.1450	1.704	0.481	25.366	
1	1:A1:1-8	1:A1:1-7	30	49MTV-WRF	15cd	0.1450	1.559	0.287	25.079	
1	TAP2	1:A1:1-8	21	JBOX		0.0000	1.414	0.182	24.897	
1	1:A1:1-9	TAP2	15	49MTV-WRF	15cd	0.1450	0.290	0.027	24.870	
1	1:A1:1-10	1:A1:1-9	22	49MTV-WRF	15cd	0.1450	0.145	0.020	24.850	
1	1:A1:1-11	TAP2	20	49MTV-WRF	30cd	0.1630	0.163	0.020	24.877	
1	1:A1:1-12	TAP2	28	49MTV-WRF	15cd	0.1450	0.961	0.165	24.731	
1	1:A1:1-13	1:A1:1-12	36	49VO-APPLC	30cd	0.0830	0.083	0.018	24.713	
1	1:A1:1-14	1:A1:1-12	39	49VO-APPLC	15cd	0.0550	0.473	0.113	24.618	
1	1:A1:1-15	1:A1:1-14	21	49MTV-WRF	15cd	0.1450	0.418	0.054	24.564	
1	1:A1:1-16	1:A1:1-15	12	49MTV-WRF	30cd	0.1630	0.163	0.012	24.552	
1	TAP3	1:A1:1-15	19	JBOX		0.0000	0.110	0.013	24.551	
1	1:A1:1-17	TAP3	23	49VO-APPLC	15cd	0.0550	0.055	0.008	24.544	
1	1:A1:1-18	TAP3	18	49VO-APPLC	15cd	0.0550	0.055	0.006	24.545	
1	1:A1:1-19	1:A1:1-12	82	49MTV-WRF	15cd	0.1450	0.260	0.131	24.600	
1	1:A1:1-20	1:A1:1-19	24	49VO-APPLC	15cd	0.0550	0.055	0.008	24.592	
1	1:A1:1-21	1:A1:1-19	22	49VO-WRFO	15cd	0.0600	0.060	0.008	24.592	

1:A1:2 Distributed Load Voltage Drop

Starting Voltage: 29vdc
Min. Device Voltage: 23.vdc
Allowable % Drop: 20.7%

Primary Wire Gauge: 14ga
Home Run Wire Gauge: 14ga

Wire Res. Per Ft. 0.003070 @ 75° Celsius
Wire Res. Per Ft. 0.003070 @ 75° Celsius

Branch	Device #	From	Distance (Feet)	PID	Setting	Device Draw	Class B Calculations Current at Device	Voltage Drop	Voltage at Device	% Vdrop Wire Length
1	TAP1	PANEL	194	JBOX		0.0000	0.345	0.411	28.589	Branch 1: 1.58%
1	1:A1:2-1	TAP1	15	49MTV-WRF	15cd	0.1450	0.145	0.013	28.576	Length: 298
1	1:A1:2-2	TAP1	37	49VO-APPLC	15cd	0.0550	0.055	0.012	28.577	
1	1:A1:2-3	TAP1	52	49MTV-WRF	15cd	0.1450	0.145	0.046	28.543	
2	1:A1:2-4	PANEL	110	49MTV-WRF	15cd	0.1450	2.255	1.523	27.477	Branch 2: 12.76%
2	1:A1:2-5	1:A1:2-4	31	49VO-APPLC	15cd	0.0550	0.055	0.010	27.467	Length: 774
2	TAP2	1:A1:2-4	30	JBOX		0.0000	2.055	0.379	27.088	
2	1:A1:2-6	TAP2	21	49VO-APPLC	15cd	0.0550	0.055	0.007	27.091	
2	1:A1:2-7	TAP2	44	49VO-APPLC	15cd	0.0550	0.110	0.030	27.069	
2	1:A1:2-8	1:A1:2-7	21	49VO-APPLC	15cd	0.0550	0.055	0.007	27.062	
2	1:A1:2-9	TAP2	45	49MTV-WRF	15cd	0.1450	1.890	0.522	26.576	
2	1:A1:2-10	1:A1:2-9	32	49MTV-WRF	15cd	0.1450	1.745	0.343	26.233	
2	1:A1:2-11	1:A1:2-10	18	49VO-APPLC	15cd	0.0550	0.055	0.006	26.227	
2	1:A1:2-12	1:A1:2-10	31	49MTV-WRF	15cd	0.1450	1.545	0.294	25.939	
2	1:A1:2-13	1:A1:2-12	29	49VO-APPLC	15cd	0.0550	0.110	0.020	25.920	
2	1:A1:2-14	1:A1:2-13	24	49VO-APPLC	15cd	0.0550	0.055	0.008	25.912	
2	1:A1:2-15	1:A1:2-12	14	49MTV-WRF	15cd	0.1450	0.200	0.017	25.922	
2	1:A1:2-16	1:A1:2-15	23	49VO-APPLC	15cd	0.0550	0.055	0.008	25.914	
2	1:A1:2-17	1:A1:2-12	39	49MTV-WRF	15cd	0.1450	1.090	0.261	25.678	
2	1:A1:2-18	1:A1:2-17	30	49VO-APPLC	15cd	0.0550	0.055	0.010	25.668	
2	1:A1:2-19	1:A1:2-17	23	49MTV-WRF	15cd	0.1450	0.145	0.020	25.658	
2	1:A1:2-20	1:A1:2-17	21	49VO-APPLC	15cd	0.0550	0.055	0.007	25.671	
2	1:A1:2-21	1:A1:2-17	28	49MTV-WRF	15cd	0.1450	0.690	0.119	25.560	
2	1:A1:2-22	1:A1:2-21	50	49MTV-WRF	15cd	0.1450	0.545	0.167	25.392	
2	1:A1:2-23	1:A1:2-22	23	49VO-APPLC	15cd	0.0550	0.055	0.008	25.385	
2	1:A1:2-24	1:A1:2-22	27	49MTV-WRF	15cd	0.1450	0.345	0.057	25.335	
2	1:A1:2-25	1:A1:2-24	21	49VO-APPLC	15cd	0.0550	0.055	0.007	25.328	
2	1:A1:2-26	1:A1:2-24	39	49MTV-WRF	15cd	0.1450	0.145	0.035	25.300	

1:A1:3 Distributed Load Voltage Drop

Starting Voltage: 29vdc
Min. Device Voltage: 23.44vdc
Allowable % Drop: 19.2%

Primary Wire Gauge: 14ga
Home Run Wire Gauge: 14ga

Wire Res. Per Ft. 0.003070 @ 75° Celsius
Wire Res. Per Ft. 0.003070 @ 75° Celsius

Branch	Device #	From	Distance (Feet)	PID	Setting	Device Draw	Class B Calculations Current at Device	Voltage Drop	Voltage at Device	% Vdrop Wire Length
1	1:A1:3-1	PANEL	154	4905-9929		0.0100	0.317	0.319	28.681	Branch 1: 1.65%
1	1:A1:3-2	1:A1:3-1	53	49VO-WRFO	15cd	0.0600	0.307	0.100	28.581	Length: 294
1	1:A1:3-3	1:A1:3-2	22	49MTV-WRF	15cd	0.1450	0.247	0.033	28.548	
1	1:A1:3-4	1:A1:3-3	27	49VO-APPLC	15cd	0.0550	0.102	0.017	28.531	
1	1:A1:3-5	1:A1:3-4	38	49VO-WRF	15cd	0.0470	0.047	0.011	28.520	
2	**1:A1:3-6**	**PANEL**	**129**	**4905-9929**		**0.0100**	**2.073**	**1.766**	**27.234**	**Branch 2: 10.9%**
2	**1:A1:3-7**	**1:A1:3-6**	**22**	**49MTV-WRF**	**15cd**	**0.1450**	**2.063**	**0.279**	**26.955**	**Length: 763**
2	**1:A1:3-8**	**1:A1:3-7**	**26**	**49VO-APPLC**	**15cd**	**0.0550**	**0.055**	**0.009**	**26.946**	
2	**1:A1:3-9**	**1:A1:3-7**	**22**	**49VO-APPLC**	**15cd**	**0.0550**	**0.110**	**0.015**	**26.940**	
2	**1:A1:3-10**	**1:A1:3-9**	**21**	**49VO-APPLC**	**15cd**	**0.0550**	**0.055**	**0.007**	**26.933**	
2	**1:A1:3-11**	**1:A1:3-7**	**32**	**49VO-APPLC**	**15cd**	**0.0550**	**0.055**	**0.011**	**26.944**	
2	**1:A1:3-12**	**1:A1:3-7**	**41**	**49MTV-WRF**	**15cd**	**0.1450**	**0.145**	**0.037**	**26.918**	
2	**1:A1:3-13**	**1:A1:3-7**	**49**	**49MTV-WRF**	**15cd**	**0.1450**	**1.553**	**0.467**	**26.488**	
2	**1:A1:3-14**	**1:A1:3-13**	**21**	**49VO-APPLC**	**15cd**	**0.0550**	**0.055**	**0.007**	**26.480**	
2	**1:A1:3-15**	**1:A1:3-13**	**29**	**49VO-WRF**	**15cd**	**0.0470**	**0.047**	**0.008**	**26.479**	
2	**1:A1:3-16**	**1:A1:3-13**	**27**	**49MTV-WRF**	**15cd**	**0.1450**	**1.306**	**0.217**	**26.271**	
2	**1:A1:3-17**	**1:A1:3-16**	**24**	**49MTV-WRF**	**15cd**	**0.1450**	**1.158**	**0.171**	**26.100**	
2	**1:A1:3-18**	**1:A1:3-17**	**16**	**49VOH-APPLCR**	**75cd**	**0.1280**	**0.128**	**0.013**	**26.088**	
2	**1:A1:3-19**	**1:A1:3-17**	**23**	**49VO-WRF**	**15cd**	**0.0470**	**0.047**	**0.007**	**26.094**	
2	**1:A1:3-20**	**1:A1:3-17**	**40**	**49MTV-WRF**	**15cd**	**0.1450**	**0.638**	**0.157**	**25.944**	
2	**1:A1:3-21**	**1:A1:3-20**	**27**	**49VOH-APPLCR**	**75cd**	**0.1280**	**0.128**	**0.021**	**25.922**	
2	**1:A1:3-22**	**1:A1:3-20**	**19**	**49VO-APPLC**	**15cd**	**0.0550**	**0.055**	**0.006**	**25.937**	
2	**1:A1:3-23**	**1:A1:3-20**	**31**	**49MTV-WRF**	**15cd**	**0.1450**	**0.310**	**0.059**	**25.885**	
2	**1:A1:3-24**	**1:A1:3-23**	**24**	**49VO-APPLC**	**15cd**	**0.0550**	**0.165**	**0.024**	**25.860**	
2	**1:A1:3-25**	**1:A1:3-24**	**20**	**49VO-APPLC**	**15cd**	**0.0550**	**0.110**	**0.014**	**25.847**	
2	**1:A1:3-26**	**1:A1:3-25**	**19**	**49VO-APPLC**	**15cd**	**0.0550**	**0.055**	**0.006**	**25.840**	
2	**1:A1:3-27**	**1:A1:3-17**	**38**	**49MTV-WRF**	**15cd**	**0.1450**	**0.200**	**0.047**	**26.054**	
2	**1:A1:3-28**	**1:A1:3-27**	**34**	**49VO-APPLC**	**15cd**	**0.0550**	**0.055**	**0.011**	**26.042**	
2	**1:A1:3-29**	**1:A1:3-16**	**29**	**4009-9601**		**0.0032**	**0.003**	**0.001**	**26.270**	
E1:1	**1:A1:3-30**	**EPR1**	**17**	**49MTV-WRF**	**15cd**	**0.1450**	**1.280**	**0.134**	**28.866**	**Branch E1:1: 1.9%**
E1:1	**1:A1:3-31**	**1:A1:3-30**	**37**	**49MTV-WRF**	**15cd**	**0.1450**	**1.135**	**0.258**	**28.609**	**Length: 257**
E1:1	**1:A1:3-32**	**1:A1:3-31**	**13**	**49MTV-WRF**	**30cd**	**0.1630**	**0.163**	**0.013**	**28.596**	
E1:1	**1:A1:3-33**	**1:A1:3-31**	**30**	**49MTV-WRF**	**15cd**	**0.1450**	**0.490**	**0.090**	**28.518**	
E1:1	**1:A1:3-34**	**1:A1:3-33**	**23**	**49VO-APPLC**	**15cd**	**0.0550**	**0.055**	**0.008**	**28.511**	
E1:1	**1:A1:3-35**	**1:A1:3-33**	**25**	**49MTV-WRF**	**15cd**	**0.1450**	**0.290**	**0.045**	**28.474**	
E1:1	**1:A1:3-36**	**1:A1:3-35**	**29**	**49MTV-WRF**	**15cd**	**0.1450**	**0.145**	**0.026**	**28.448**	
E1:1	**1:A1:3-37**	**1:A1:3-31**	**31**	**49MTV-WRF**	**15cd**	**0.1450**	**0.337**	**0.064**	**28.544**	
E1:1	**1:A1:3-38**	**1:A1:3-37**	**27**	**49MTV-WRF**	**15cd**	**0.1450**	**0.192**	**0.032**	**28.513**	
E1:1	**1:A1:3-39**	**1:A1:3-38**	**25**	**49VO-WRF**	**15cd**	**0.0470**	**0.047**	**0.007**	**28.505**	

PANEL CALCULATIONS NOTES:

1. THE INFORMATION OR SYMBOLS SHOWN IN BOLD LINETYPE ARE NEW OR RELOCATED.
2. THE INFORMATION OR SYMBOLS SHOWN IN LIGHT LINETYPE ARE EXISTING TO REMAIN.

KEYNOTES:

1. DEVICE(S) REMOVED FROM CIRCUIT. DEVICE QUANTITY CHANGED.
2. INTERIM HEAT DETECTOR.TO BE REMOVED AND REPLACED WITH EXISTING SMOKE DETECTOR AFTER CONSTRUCTION.

City of Aurora Building Division
Reviewed for Code Compliance
Approved as Noted: *Rich Tenorio*
Date: *Oct 11, 2024*
2021 INTERNATIONAL CODES & 2023 NEC

Johnson Controls
DISTRICT 1-418
15000 E. WASHINGTON AVE
AURORA, CO 80017
SERVICE: 303-355-6000
PHONE: 303-392-9500
FAX: 303-355-9415

NICET CERTIFICATION INFORMATION
CALE RAUCH
NICET Fire Alarm, III
Certification #151588
Valid Through: 12/01/25
08/20/2024

THE MEDICAL CENTER OF AURORA - SOUTH TOWER NODE 1 FACP - EPS-1 ED ENTRY AND TRIAGE RENOVATION

THE MEDICAL CENTER OF AURORA - SOUTH
1501 SOUTH POTOMAC STREET
AURORA, COLORADO 80012

Revisions shown with ⚠ symbol

ISSUE LOG MARK	DATE	CAD	CHK	DESCRIPTION

FOR PERMIT

DRAWN BY:	CCD
CHECKED BY:	CBR
ISSUE DATE:	8/14/24
JOB #:	
PROJECT #:	419-650521647

JOHNSON CONTROLS © 2024

SYSTEM: FIRE ALARM SYSTEM

SHEET: NODE-1 4100U FACP CALCULATIONS AND SCHEDULES BUILDOUT CONTINUED

FA-605

© Johnson Controls 2024. All rights reserved. Reuse, copying, modification or alteration of the drawings and other information contained herein is strictly prohibited.

FILE PATH: C:\Users\jdyson4\OneDrive - Johnson Controls\Medical Center of Aurora\1501 S Potomac - Aurora South\South Tower - Node 1\A3-1st ED Entry & Triage Reno - 2024 - 650521647-FireFA-R21.rvtLAST SAVED BY: JDYSON4LAST PRINTED: 8/20/2024 11:41:03 AM36" x 42" Arch E1 Size

RSN: 1844554
Permit: 2024 2476680-LT
Sheet 10 of 68

STANDARD SENSOR BASE

SIMPLEX 4098-9792

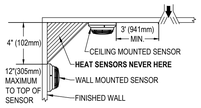

MOUNTING OPTION "A"

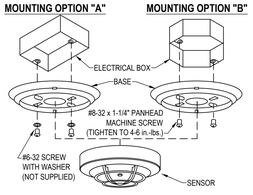

MOUNTING OPTION "B"

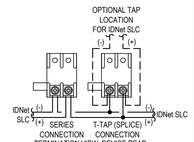

MOUNTING OPTIONS

OPTION [1]	DESCRIPTION	NOTE
A	SINGLE GANG BOX, 2-1/8" (54mm) DEEP - FLUSH MOUNT	BY OTHERS
B	4" (102mm) OCTAGONAL BOX, 1-1/2" (38mm) DEEP, MINIMUM - FLUSH MOUNT	BY OTHERS
C	4" (102mm) SQUARE BOX, 1-1/2" DEEP (MIN) W/ SIMPLEX 4098-9832 ADAPTER KIT	BOX BY OTHERS, 4098-9832 ORDERED SEPARATELY
D	4" (102mm) SQUARE BOX, 1-1/2" DEEP (MIN) W/ SINGLE GANG COVER PLATE 3/4" (19mm) EXTENSION	BY OTHERS

1. FOR ADDITIONAL MOUNTING OPTIONS, DOWNLOAD DATA SHEET 4098-0019 FROM HTTP://WWW.SIMPLEX-FIRE.COM

WIRING NOTES

1. MAINTAIN CORRECT POLARITY ON CONNECTIONS.
2. ALWAYS CUT CONDUCTORS AND SECURE UNDER TERMINALS. NEVER LOOP WIRES UNDER TERMINALS.
3. ANY WIRE SPLICES TO BE MADE BY LISTED AND AHJ APPROVED METHODS.

ADDRESSABLE PULL STATIONS

SIMPLEX 4099 SERIES

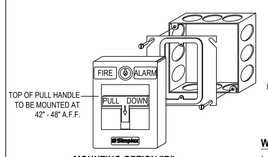

MOUNTING OPTION "B"

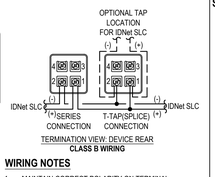

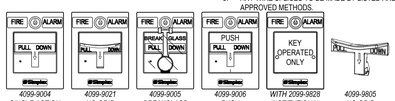

WIRING NOTES

1. MAINTAIN CORRECT POLARITY ON TERMINAL CONNECTIONS.
2. ALWAYS CUT CONDUCTORS AND SECURE UNDER TERMINALS. NEVER LOOP WIRES UNDER TERMINALS.
3. ANY WIRE SPLICES TO BE MADE BY LISTED AND AHJ APPROVED METHODS.

MOUNTING OPTIONS

OPTION [1]	DESCRIPTION	NOTE
A	SINGLE GANG BOX, 2-1/2" (64mm) DEEP	BY OTHERS
B	4" (102mm) SQUARE BOX, 2-1/8" DEEP (MIN) W/ SINGLE GANG COVER PLATE 3/4" (19mm) EXTENSION	BY OTHERS
C	SIMPLEX 2975-9022 - .5H x 3-7/8"W x 2-3/16"D (127mm x 98mm x 56mm)	ORDERED SEPARATELY
D	SIMPLEX 2975-9178 - 5-3/4"H x 3-7/8"W x 2-3/16"D (132mm x 102mm x 56mm)	ORDERED SEPARATELY

1. FOR ADDITIONAL MOUNTING OPTIONS, DOWNLOAD DATA SHEET 4099-0005 FROM HTTP://WWW.SIMPLEX-FIRE.COM

DUCT SMOKE DETECTOR

SIMPLEX 4098-9756 ANALOG 4-WIRE DUCT SENSOR WITH 24VDC RELAY

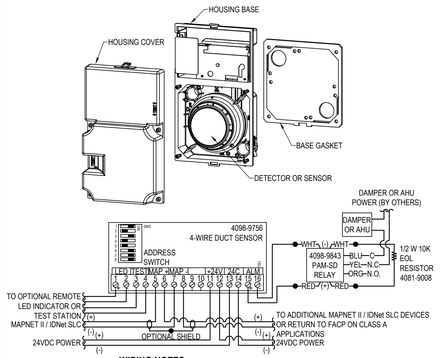

WIRING NOTES

1. MAINTAIN CORRECT POLARITY ON TERMINAL CONNECTIONS.
2. ALWAYS CUT CONDUCTORS AND SECURE UNDER TERMINALS. NEVER LOOP WIRES UNDER TERMINALS.
3. ANY WIRE SPLICES TO BE MADE BY LISTED AND AHJ APPROVED METHODS. CLASS B APPLICATIONS ONLY.

DUCT SMOKE DETECTOR INSTALLATION GUIDE

PRE-INSTALLATION ROUTINES

DUCT DETECTORS/SENSORS SHOULD BE INSTALLED IN A LOCATION OF RELATIVELY NON-TURBULENT AIR FLOW AND WITHIN THE INTENDED OPERATING VELOCITY RANGE OF 300-4000 FEET-PER-MINUTE (91 TO 1220 M/MIN.)

MEASUREMENTS OF AIR FLOW AND EXAMINATION OF ENGINEERING SPECIFICATIONS THAT DEFINE EXPECTED DUCT AIR VELOCITIES UNDER ALL CONDITIONS IS RECOMMENDED. THIS IS DONE TO DETERMINE IF A LOCATION IS SUITABLE FOR DUCT DETECTOR/SENSOR OPERATION. AN ALNOR INSTRUMENT CO. (CHICAGO) MODEL 6000P VELOMETER OR EQUIVALENT (NOT SUPPLIED) MAY BE USED TO CHECK THE DUCT AIR VELOCITY.

INSTALLATION GUIDELINES

1. LOCATE DUCT HOUSINGS SO THAT DAMPERS DO NOT RESTRICT AIR FLOW AT THE DETECTOR/SENSOR LOCATION. SEE FIGURE 1.
2. LOCATE AIR DUCT DETECTORS/SENSORS ON THE RETURN OR SUPPLY DUCT OF THE EQUIPMENT'S AIR HANDLING SYSTEM. HOWEVER, DETECTORS/SENSORS SHOULD NOT BE INSTALLED IN THE RETURN AIR DAMPER BRANCH. SEE FIGURE 1.
3. LOCATE AIR DUCT DETECTORS/SENSORS ON BRANCH LINES IF CLOSE IDENTIFICATION OF THE ALARM SOURCE IS REQUIRED.
4. LOCATE AIR DUCT DETECTORS/SENSORS ON THE DOWNSTREAM SIDE OF FILTERS TO SENSE FIRE IN FILTERS. HOWEVER, SHOULD THE FILTERS BLOCK, SUFFICIENT AIR FLOW MAY NOT BE AVAILABLE FOR PROPER AIR DUCT DETECTOR/SENSOR OPERATION. SEE FIGURE 1.
5. WHENEVER POSSIBLE, LOCATE AIR DUCT DETECTORS/SENSORS WHERE THEY CAN BE CONVENIENTLY OBSERVED AND READILY SERVICED.
6. LOCATE THE AIR DUCT DETECTORS/SENSORS IN RETURN AIR DUCTS AHEAD OF MIXING AREAS.
7. DO NOT LOCATE AIR DUCT DETECTORS/SENSORS NEXT TO OUTSIDE AIR INLETS UNLESS YOU WANT TO MONITOR SMOKE ENTRY TO THE HANDLING SYSTEM FROM AN ADJACENT AREA.
8. LOCATE AIR DUCT DETECTORS/SENSORS UPSTREAM OF AIR HUMIDIFIERS AND COOLING COILS.
9. DO NOT INSTALL THE DUCT DETECTOR HOUSING OR DUCT TUBES IN LOCATIONS THAT EXCEED THE LISTED TEMPERATURE RATINGS FOR THE DEVICE.
10. DO NOT MOUNT THE DUCT HOUSING ON BOTTOM OF DUCT.

DUCT DETECTOR/SENSOR INSTALLATION

1. TAPE THE TEMPLATE (SUPPLIED) ON THE DUCT SURFACE. DO NOT POSITION THE TEMPLATE WITH EDGES ANGLED WITH RESPECT TO AIR FLOW DIRECTION. SEE FIGURE 2.
2. DRILL TWO 1 1/4 INCH (31.75 MM) HOLES (MARKED "A") AS LOCATED BY THE TEMPLATE. REMOVE TEMPLATE AFTER HOLES HAVE BEEN DRILLED.
3. IF THE DUCT IS MORE THAN 3 FEET (0.9 M) WIDE, THEN PUNCH A 1-INCH (25.4 MM) HOLE IN THE DUCT WALL DIRECTLY OPPOSITE THE UPSTREAM 1-1/4 INCH (31.75 MM) HOLE. SEE FIGURE 3. THIS HOLE IS USED TO SUPPORT THE INLET TUBE.
4. INLET TUBES SHOULD BE SELECTED AND CUT TO LENGTH AS SPECIFIED IN TABLE 1. AFTER TRIMMING THE INLET TUBE OPPOSITE THE SLOT, TAP RUBBER PLUG (SUPPLIED) INTO THE TRIMMED END. SEE FIGURE 3.

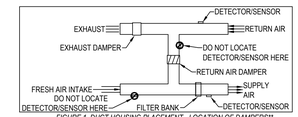

*FIGURE 1. DUCT HOUSING PLACEMENT - LOCATION OF DAMPERS***

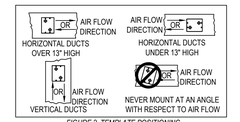

FIGURE 2. TEMPLATE POSITIONING

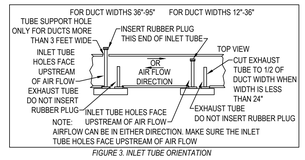

FIGURE 3. INLET TUBE ORIENTATION

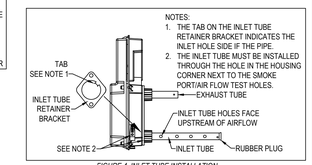

FIGURE 4. INLET TUBE INSTALLATION

INLET TUBE SELECTION

OVERALL DUCT WIDTH	TUBE REQUIRED	TUBE TYPE	SUGGESTED TOTAL LENGTH
12" (30cm)	4098-9854	13" (33.02cm)	1/2" (1.27cm) LONGER THAN DUCT WIDTH
13" (33.02cm) TO 23" (58cm)	4098-9855	24" (60.96cm)	1/2" (1.27cm) LONGER THAN DUCT WIDTH
24" (60cm) TO 46" (116cm)	4098-9856	49" (125.46cm)	2" (5.8cm) LONGER THAN DUCT WIDTH
46" (116cm) TO 71" (180cm)	4098-9857	73" (185cm)	2" (5.8cm) LONGER THAN DUCT WIDTH
71" (180cm) TO 95" (240cm)	4098-9858	97" (245cm)	2" (5.8CM) LONGER THAN DUCT WIDTH

TABLE 1. INLET TUBE SELECTION

* REFER TO INSTALLATION INSTRUCTION DOCUMENT 574-776 FOR MORE DETAILED INFORMATION.

** WHEN PROVIDING CONTROL FOR A SMOKE DAMPER INSTALLED WITHIN AN AIR TRANSFER OPENING IN A WALL, THE DUCT DETECTOR SHALL BE INSTALLED WITHIN 5 FEET HORIZONTALLY OF THE DAMPER.

24VDC POLARIZED RELAY

SIMPLEX 4098-9843 / APOLLO AMERICA PAM-SD

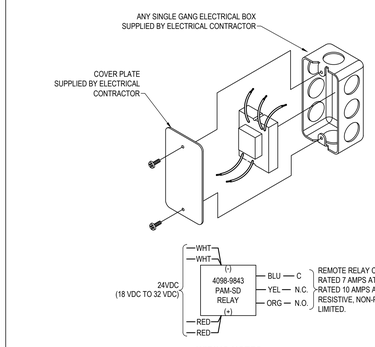

WIRING NOTES

1. MAINTAIN CORRECT POLARITY ON CONNECTIONS.
2. ANY WIRE SPLICES TO BE MADE BY LISTED AND AHJ APPROVED METHODS. CLASS B APPLICATIONS ONLY.

FOR ADDITIONAL DETAILS SEE DATA SHEET 2088-0010 ON HTTP://WWW.SIMPLEX-FIRE.COM

True*Alert* ISOLATOR MODULE

SIMPLEX 4905-9929

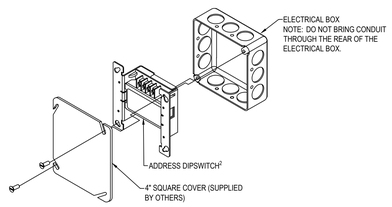

WIRING NOTES

1. MAINTAIN CORRECT POLARITY ON TERMINAL CONNECTIONS.
2. ALWAYS CUT CONDUCTORS AND SECURE UNDER TERMINALS. NEVER LOOP WIRES UNDER TERMINALS.
3. ANY WIRE SPLICES TO BE MADE BY LISTED AND AHJ APPROVED METHODS.

MOUNTING OPTIONS

OPTION [2]	DESCRIPTION	NOTE
A	4" (102mm) SQUARE BOX, 2-1/8" DEEP (MIN)	BY OTHERS

1. FOR ADDITIONAL MOUNTING OPTIONS AND APPLICATION GUIDE, DOWNLOAD DATA SHEET 4905-0001 FROM HTTP://WWW.SIMPLEX-FIRE.COM
2. SEE IDNAC DIPSWITCH DETAIL. DO NOT SET ADDRESS HIGHER THAN 63.

True*Alert* ES ADDRESSABLE APPLIANCES

SIMPLEX 49MTV SERIES WALL MOUNTED MULTI-TONE AUDIBLE / VISUAL

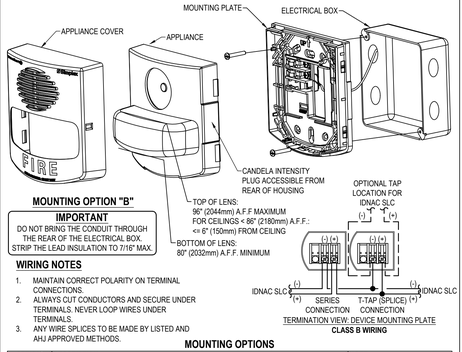

MOUNTING OPTION "B"

IMPORTANT
DO NOT BRING THE CONDUIT THROUGH THE REAR OF THE ELECTRICAL BOX. STRIP THE LEAD INSULATION TO 7/16" MAX.

WIRING NOTES

1. MAINTAIN CORRECT POLARITY ON TERMINAL CONNECTIONS.
2. ALWAYS CUT CONDUCTORS AND SECURE UNDER TERMINALS. NEVER LOOP WIRES UNDER TERMINALS.
3. ANY WIRE SPLICES TO BE MADE BY LISTED AND AHJ APPROVED METHODS.

MOUNTING OPTIONS

OPTION [1]	DESCRIPTION	NOTE
A	SINGLE GANG OR DOUBLE GANG BOX, 1-1/2" (38mm) MINIMUM DEPTH	BY OTHERS
B	4" (102mm) SQUARE BOX, 1-1/2" (38mm) MINIMUM DEPTH	BY OTHERS
C	SIMPLEX 2975-9145, 7-7/8"H x 5-1/8"W x 2-3/4"D (127mm x 98mm x 56mm) REQUIRES 4905-9931 PLATE	ORDERED SEPARATELY

1. FOR ADDITIONAL MOUNTING OPTIONS, DOWNLOAD DATA SHEET S49MTV-0001 FROM HTTP://WWW.SIMPLEX-FIRE.COM

True*Alert* ES ADDRESSABLE APPLIANCES

SIMPLEX 49VO / 49VOH SERIES CEILING MOUNTED VISUAL ONLY

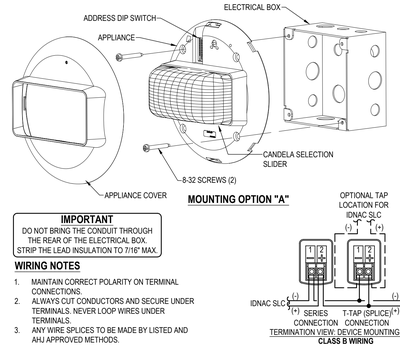

IMPORTANT
DO NOT BRING THE CONDUIT THROUGH THE REAR OF THE ELECTRICAL BOX. STRIP THE LEAD INSULATION TO 7/16" MAX.

MOUNTING OPTION "A"

WIRING NOTES

1. MAINTAIN CORRECT POLARITY ON TERMINAL CONNECTIONS.
2. ALWAYS CUT CONDUCTORS AND SECURE UNDER TERMINALS. NEVER LOOP WIRES UNDER TERMINALS.
3. ANY WIRE SPLICES TO BE MADE BY LISTED AND AHJ APPROVED METHODS.

MOUNTING OPTIONS

OPTION [1]	DESCRIPTION	NOTE
A	4" SQUARE ELECTRICAL BOX, 1-1/2" (39mm) MINIMUM DEPTH	BY OTHERS
B	SINGLE GANG ELECTRICAL BOX, 1-1/2" (39mm) MINIMUM DEPTH, WITH 49VO-APCS ADAPTER PLATE	BOX BY OTHERS, SIMPLEX ADAPTER PLATE

1. FOR ADDITIONAL MOUNTING OPTIONS, DOWNLOAD DATA SHEET S49VOC-0001 FROM HTTP://WWW.SIMPLEX-FIRE.COM

True*Alert* ES ADDRESSABLE APPLIANCES

SIMPLEX 49VO SERIES WALL MOUNTED VISUAL ONLY

IMPORTANT
DO NOT BRING THE CONDUIT THROUGH THE REAR OF THE ELECTRICAL BOX. STRIP THE LEAD INSULATION TO 7/16" MAX.

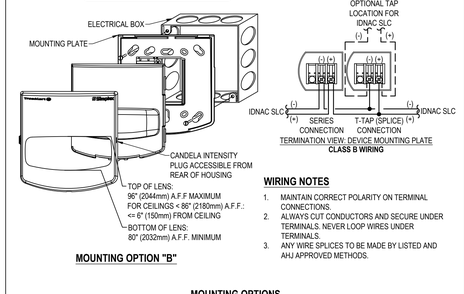

MOUNTING OPTION "B"

WIRING NOTES

1. MAINTAIN CORRECT POLARITY ON TERMINAL CONNECTIONS.
2. ALWAYS CUT CONDUCTORS AND SECURE UNDER TERMINALS. NEVER LOOP WIRES UNDER TERMINALS.
3. ANY WIRE SPLICES TO BE MADE BY LISTED AND AHJ APPROVED METHODS.

MOUNTING OPTIONS

OPTION [1]	DESCRIPTION	NOTE
A	SINGLE GANG OR DOUBLE GANG BOX, 1-1/2" (38mm) DEEP (MIN)	BY OTHERS
B	4" (102mm) SQUARE BOX, 1-1/2" DEEP (MIN)	BY OTHERS
C	SIMPLEX 2975-9145, 7-7/8"H x 5-1/8"W x 2-3/4"D (127mm x 98mm x 56mm) REQUIRES 4905-9931 PLATE	ORDERED SEPARATELY

1. FOR ADDITIONAL MOUNTING OPTIONS, DOWNLOAD DATA SHEET S49VO-0001 FROM HTTP://WWW.SIMPLEX-FIRE.COM

REMOTE ALARM INDICATOR / KEY SWITCH

SIMPLEX 2098-9806

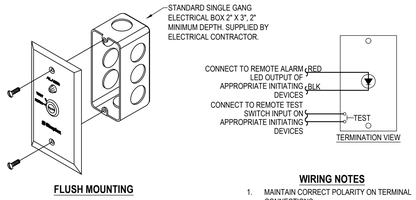

FLUSH MOUNTING

WIRING NOTES

1. MAINTAIN CORRECT POLARITY ON TERMINAL CONNECTIONS.
2. ALWAYS CUT CONDUCTORS AND SECURE UNDER TERMINALS. NEVER LOOP WIRES UNDER TERMINALS.
3. ONE INDICATOR MAY BE INSTALLED PER DETECTOR.

END OF LINE RESISTOR CODES

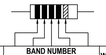

NOTE: REFER TO PANEL/MODULE AND DEVICE INSTALLATION INSTRUCTIONS FOR PROPER TERMINATIONS.

MODEL	REF. NUMBER	Ω	BAND NUMBER 3	2	1	4	5	WATTS	CIRCUIT TYPE	FIRE ALARM PANEL/MODULE
4081-9001	733-892	2.2K	RED	RED	RED	GLD	N/A	1/2	ANNUNCIATOR (4300)	4004; 4010 (TROUBLE)
4081-9002	733-893	3.3K	ORG	ORG	RED	GLD	N/A	1	N.O. INITIATING PULL, SMOKE, HEAT, WATERFLOW, TAMPER, ETC	4004*, 4004R, 4005*, 4006, 4100, 4120, 4100U, ZAMs
4081-9003	733-896	4.7K	YEL	VT	RED	GLD	N/A	1/2	24 PT. I/O SWITCH SUPV. CURRENT LIMITED N.O. INIT., NOTIFICATION (DACT)	4605-7401, 4100 SERIES; 4090 IDNET IAM (EOLR) 2080-9024
4081-9004	733-886	6.8K	BLU	GRY	RED	GLD	N/A	1/2	N/O INITIATING PULL, SMOKE, HEAT, W.FLOW, TAMPER, ETC	4004, 4005, 4090-9001 IDNET IAM, 2190-9172 MAPNET II 2 PT I/O
4081-9005	733-984	1.8K	BRN	GRY	RED	GLD	N/A	1/2	CURRENT LIMITED N.O. INITIATING (INLINE)	4-20MA 2AM (TROUBLE); 4090-9001 IDNET IAM
4081-9006	733-890	560	GRN	BLU	BRN	GLD	N/A	1	N.C. INITIATING (EOLR)	4005*, 4090-9001 IDNET IAM 4100, 4100U
4081-9007	733-891	1.2K	BRN	RED	RED	GLD	N/A	1	N.C. INITIATING (EOLR)	4005
4081-9008	733-894	10K	BRN	BLK	ORG	GLD	N/A	1/2	NOTIFICATION	4004, 4005, 4006, 4008, 4009, 4010, 4100, 4100U
4081-9009	733-912	20	RED	BLK	BLK	GLD	N/A	1	TO MR-101 RELAY COIL	4005 8 POINT I/O
4081-9010	733-973	1K	BRN	BLK	RED	GLD	N/A	1	N.C. INIT. (ACROSS CONTACTS) 24 PT. I/O (ACROSS CONTACTS CURRENT LIMITED N.O. INIT. (IN SERIES WITH CONTACT)	4005*, 4090-9001 IDNET IAM 4605-7401, 4100 SERIES 4090-9001 IDNET IAM
4081-9011	733-974	100	BRN	BLK	BRN	GLD	N/A	1/2	ANNUNCIATOR (N2)	4006, 4008, 4010
4081-9012	733-985	22K	RED	RED	ORG	GLD	N/A	1/2	SPEAKER CIRCUIT	4003
4081-9013	734-086	4.99K	YEL	WHT	WHT	BRN	BRN	1/2		
4081-9014	734-092	2.4K	RED	YEL	RED	GLD	N/A	1/2	N.C. INITIATING (SECURITY MONITORING EOLR)	4090-9001 IDNET IAM
4081-9015	734-093	1.5K	BRN	GRN	RED	GLD	N/A	1/2	CURRENT LIMITED N.O. INIT. (SECURITY MONITORING EOLR)	4090-9001 IDNET IAM
4081-9016	734-149	150K	BRN	GRN	YEL	GLD	N/A	1/2		
4081-9017	734-171	3.9K	ORG	WHT	RED	GLD	N/A	1		
4081-9018	734-168	10K	BRN	BLK	ORG	GLD	N/A	1	70VRMS CONSTANT SUPV. NAC	4100-1260
	378-090	8.2K	GRY	RED	RED	GLD	N/A	1/2	SECURITY MONITORING (EOLR)	4100, 4100U
	378-046	5.6K	GRN	BLU	RED	GLD	N/A	1/2	N.O. SECURITY MON. (SERIES)	4100, 4100U
	378-069	12K	BRN	RED	ORG	GLD	N/A	1/2	N.C. SECURITY MON. (SHUNT)	4100, 4100U

* USE WITH RETROFIT OR HIGH CURRENT MODULE

DEVICE MOUNTING HEIGHT REFERENCE

PER NFPA 72

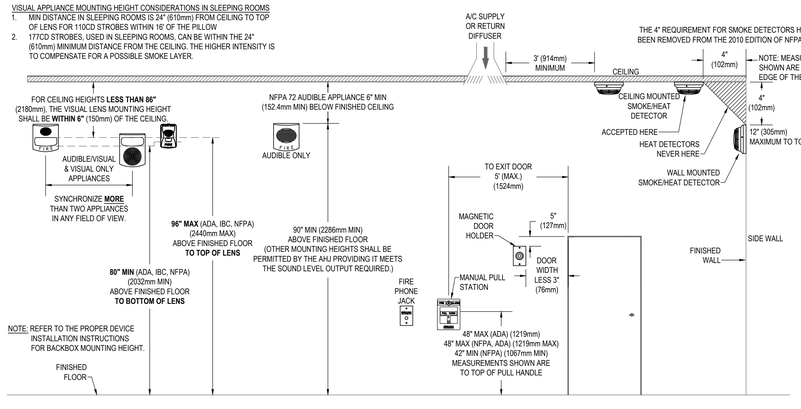

Johnson Controls
DISTRICT 1 418
1501 SOUTH POTOMAC AVE
AURORA, CO 80012
PHONE: 303-326-9500
FAX: 303-369-9815

NICET CERTIFICATION INFORMATION
CALE RAUCH
NICET Fire Alarm, III
Certification #151588
Valid Through: 12/01/25
08/20/2024

THE MEDICAL CENTER OF AURORA - SOUTH ED ENTRY AND TRIAGE RENOVATION

THE MEDICAL CENTER OF AURORA - SOUTH
1501 SOUTH POTOMAC STREET
AURORA, COLORADO 80012

ISSUE LOG

MARK	DATE	DESCRIPTION	CHK	CAD
Revisions shown with ⚠ symbol				

FOR PERMIT

DRAWN BY:	CCD
CHECKED BY:	CBR
ISSUE DATE:	8/14/24
JOB #:	
PROJECT #:	419:650521647

JOHNSON CONTROLS © 2024

SYSTEM: FIRE ALARM SYSTEM

SHEET: TYPICAL DEVICE WIRING

FA-701

FILE PATH: C:\Users\jtpowell\OneDrive - Johnson Controls\Medical Center of Aurora\1501 S Potomac - Aurora South\South Tower - Node 1\43-1st ED Entry & Triage Reno - 2024 - 650521647\Files\FA-701.dwg
LAST SAVED BY: JDXONC4
LAST PRINTED: 8/20/2024 11:41:07 AM
36" x 42" Arch E1 Size

© Johnson Controls 2024. All rights reserved. Reuse, copying, modification or alteration of the drawings and other information contained herein is strictly prohibited.

GRAPHIC MAP NOTES:

1. THIS 36"X48" GRAPHIC MAP IS NOT SHOWN TO SCALE.

THE MEDICAL CENTER OF AURORA
1501 S. POTOMAC ST
AURORA, COLORADO 80012

AS OF: 08/16/2024

City of Aurora Building Division
Reviewed for Code Compliance
Approved as Noted: *Rich Tenorio*
Date: *Oct 11, 2024*
2021 INTERNATIONAL CODES & 2023 NEC

LEGEND:

FACP	FIRE ALARM CONTROL PANEL
FATC	FIRE ALARM TERMINAL CABINET
ANN	GRAPHIC ANNUNCIATOR
MAP	GRAPHIC ZONE MAP
	SMOKE DETECTOR
	HEAT DETECTOR
	MANUAL PULL STATION
KH	KITCHEN HOOD SYSTEM
	SPRINKLER WATERFLOW VALVE
	SPRINKLER TAMPER SWITCH
	DUCT DETECTOR
	FIRE DEPARTMENT CONNECTION
	FIRE HYDRANT

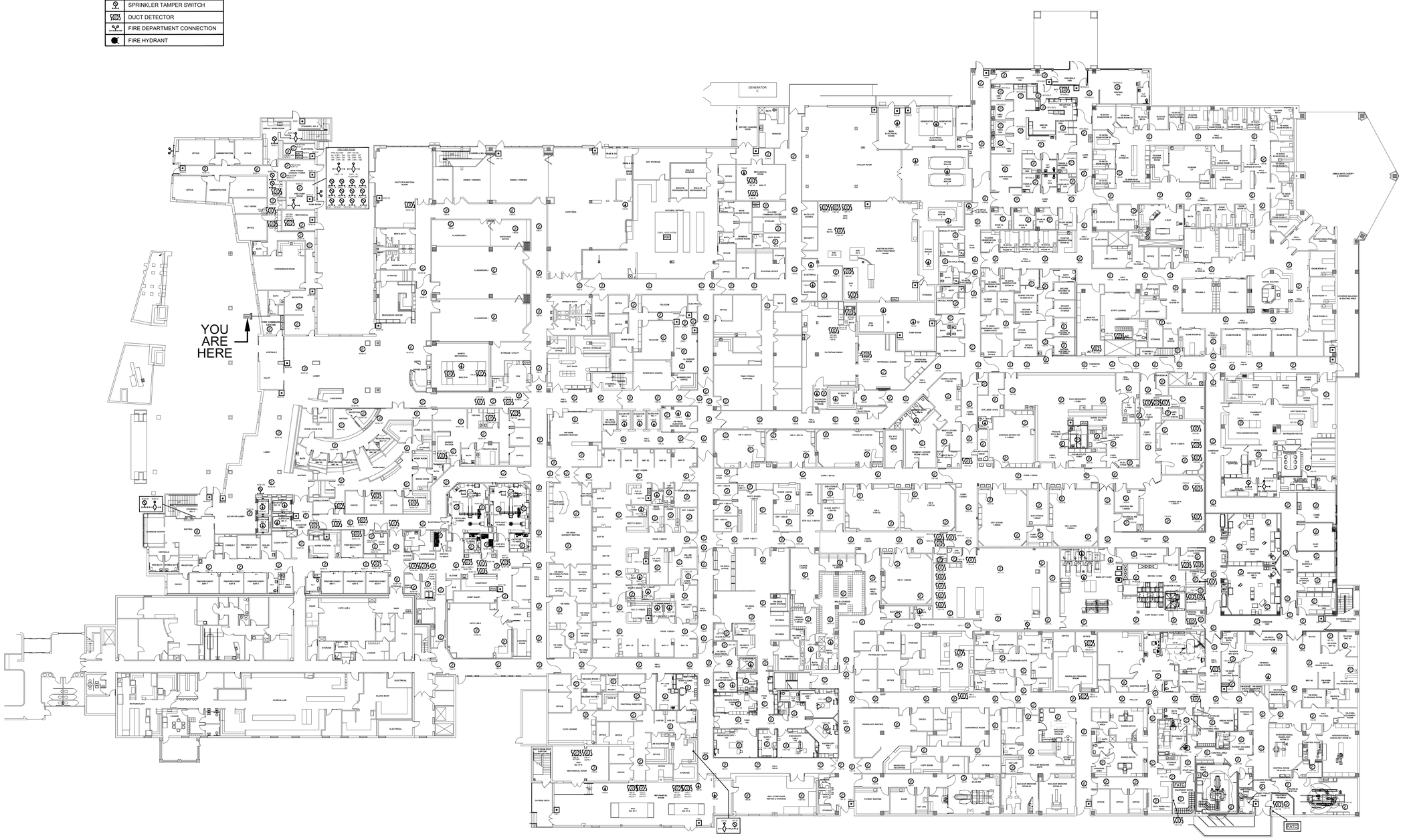

Johnson Controls
AURORA (303) 355-0500

The Medical Center of Aurora
Health ONE

Johnson Controls
DISTRICT - 419
14200 E. EXPOSITION AVE
AURORA, CO 80012
SERVICE: 303-355-0500
PHONE: 303-355-0500
FAX: 303-355-0615

NICET CERTIFICATION INFORMATION
CALE RAUCH
NICET Fire Alarm, III
Certification #151588
Valid Through: 12/01/25
08/20/2024

THE MEDICAL CENTER OF AURORA - SOUTH ED ENTRY AND TRIAGE RENOVATION

THE MEDICAL CENTER OF AURORA - SOUTH
1501 SOUTH POTOMAC STREET
AURORA, COLORADO 80012

Revisions shown with symbol

ISSUE LOG:					
MARK	DATE	CAD	CHK	DESCRIPTION	

FOR PERMIT

DRAWN BY:	CCD
CHECKED BY:	CBR
ISSUE DATE:	8/14/24
JOB #:	
PROJECT #:	419:650521647

JOHNSON CONTROLS © 2024

SYSTEM:
FIRE ALARM SYSTEM

SHEET:
STATIC GRAPHIC MAP AT FACP IN FIRE COMMAND CENTER 1E-2902A

FA-801

FILE PATH: C:\Users\jdixonc4\OneDrive - Johnson Controls\Medical Center of Aurora\1501 S Potomac - Aurora South\South Tower - Node 1\43-1st ED Entry & Triage Reno - 2024 - 650521647\Fire\FA-801.dwg
LAST SAVED BY: JDIXONC4
LAST PRINTED: 8/20/2024 11:41:15 AM
30" x 42" - Arch E1 Size

© Johnson Controls 2024. All rights reserved. Reuse, copying, modification or alteration of the drawings and other information contained herein is strictly prohibited.

E LIGHT
Excellence in Electrical

361 Inverness Dr S., Ste B
Englewood, Co 80111
303-754-0001
Fax 303-754-0011

Submittal 2 for Approval

Project:	***TMCA ED Entry & Triage*** ***1501 S. Potomac St.*** ***aurora, CO 80012***
E Light Job #:	***E24055***
Project Manager: ***Phone #:***	***Mike Berumen*** ***303-754-0001***
General Contractor: ***Contact:***	***Vertix Builders*** ***178 1st Street*** ***Firestone CO 80520*** ***Cameron Coker***
Architect:	
Engineer:	
Contents:	***Fire Alarm Devices***
Vendor:	***JCI***
Spec Section:	
Date Submitted:	***September 11, 2024***
Requested Return Date:	***September 25, 2024***

RSN: 1844554
Permit: 2024 2476680-LT
Sheet 13 of 68

Johnson Controls
14200 E. Exposition Avenue
Aurora, Colorado 80012

www.simplexgrinnell.com

Tele: (303) 355-0500
Fax: (303) 355-0615

Fire Alarm
Product Data Submittal for:

THE MEDICAL CENTER OF AURORA - SOUTH
ED ENTRY AND TRIAGE RENOVATION
1501 SOUTH POTOMAC STREET
AURORA, COLORADO 80012

NICET CERTIFICATION
INFORMATION

CALE RAUCH
NICET Fire Alarm, III
Certification #151588
Valid Through: 12/01/25

08/20/2024

Prepared for:

E LIGHT ELECTRIC SERVICES, INC.
361 INVERNESS DRIVE SOUTH, SUITE B
ENGLEWOOD, COLORADO 80112

City of Aurora Building Division
Reviewed for Code Compliance
Approved as Noted: *Rich Tenorio*
Date: *Oct 11, 2024*
2021 INTERNATIONAL CODES & 2023 NEC

Johnson Controls
14200 E. Exposition Avenue
Aurora, Colorado 80012
Sales: (303) 355-0500
Service: (303) 355-0500
Fax: (303) 355-0615

PROJECT:	THE MEDICAL CENTER OF AURORA - SOUTH ED ENTRY AND TRIAGE RENOVATION
PREPARED FOR:	E LIGHT ELECTRIC SERVICES, INC.

TYPE:	***DESCRIPTION:***
4009-9601	IDNAC REPEATER 120V PLATINUM UL/ULC
2081-9274	BATTERIES - 10AH (2x)
4098-9714	TRUEALARM PHOTO SMOKE SENSOR
4098-9733	TRUEALARM HEAT SENSOR
4098-9792	TRUEALARM SENSOR BASE
4099-9006	ADDRESSABLE DOUBLE ACTION MANUAL STATION, PUSH
4098-9756	TRUEALARM DUCT SMOKE SENSOR W/ RELAY OUTPUT
4098-9856	SAMPLING TUBES 49", PLASTIC
2098-9806	REMOTE TEST STATION W/ LED AND KEY SWITCH
4098-9843	ENCAPSULATED RELAY PAM-SD
4081-9008	EOL, 10K 1/2W
4905-9929	TRUEALERT ISOLATOR MODULE
49MTV-WRF	MULTI-TONE A/V, RED, WALL MOUNT
49VO-APPLC	VO APPLIANCE ONLY CEIL MT
49VOH-APPLCR	VO APPLIANCE ONLY CEIL MT, RED LENS
49VOC-CRF	VO COVER, CEIL MT, RED, FIRE
49VO-WRF	VO, WALL MT, RED, FIRE LABEL

Simplex

*UL, ULC, CSFM Listed; FM Approved; MEA (NYC) Acceptance**

TrueAlert Addressable Notification

4009 IDNAC Repeater; Power and Distance Extender

Features

4009 IDNAC Repeaters provide enhanced power delivery to TrueAlert/TrueAlert ES addressable notification appliances controlled by IDNAC SLCs:

- Output voltage in alarm is maintained by an efficient switching regulator at 29 VDC during both AC input and battery backup conditions allowing strobes to operate at lower current
- With lower current strobes and regulated output voltage, wiring distance can be extended 2 to 3 times that of conventional notification, appliance loading can be increased, or smaller wire gauge can be used, all resulting in ***installation savings*** with high assurance that appliances that operate during normal system testing will operate during worst case alarm conditions

4009 IDNAC Repeaters receive an IDNAC SLC input and provide a repeated 3 A SLC output to extend SLC distance and power:

- Appliance control and address limit remains with the host IDNAC control panel. Repeater status is communicated to the control panel for system diagnostics and also locally indicated
- Repeater output extends supervisory capacity by up to 139 additional unit loads or 3 A
- Input SLC connection can be Class B or Class A
- Repeater output can be a Class A loop or a Class B output with internal connections for up to four (4) T-tapped output branches (Class A output requires 4009-9814 Class A Adapter)
- Operation requires one IDNAC SLC address; Repeaters can be connected as one in series, or up to five (5) in parallel
- AC power input is 120 VAC or 220-240 VAC, 50/60 Hz, auto-select
- An on-board battery charger is provided with low AC battery disconnect selectable per Repeater (required for ULC listed applications)
- Operation is compatible with TrueAlert ES and TrueAlert addressable notification appliances and accessories
- Available with platinum or red cabinet
- Listed to UL 864 and ULC S527

Multiple wiring options are available:

- Wiring options include Class B multiple branch (up to 4) output, Class A loop extension, and Class A riser to Class B branches or a Class A loop output
- When the Repeater is part of a Class A loop from the IDNAC SLC source panel, up to twice the distance for the loop is available; (Class A loop repeating requires 4009-9814 Class A Adapter)

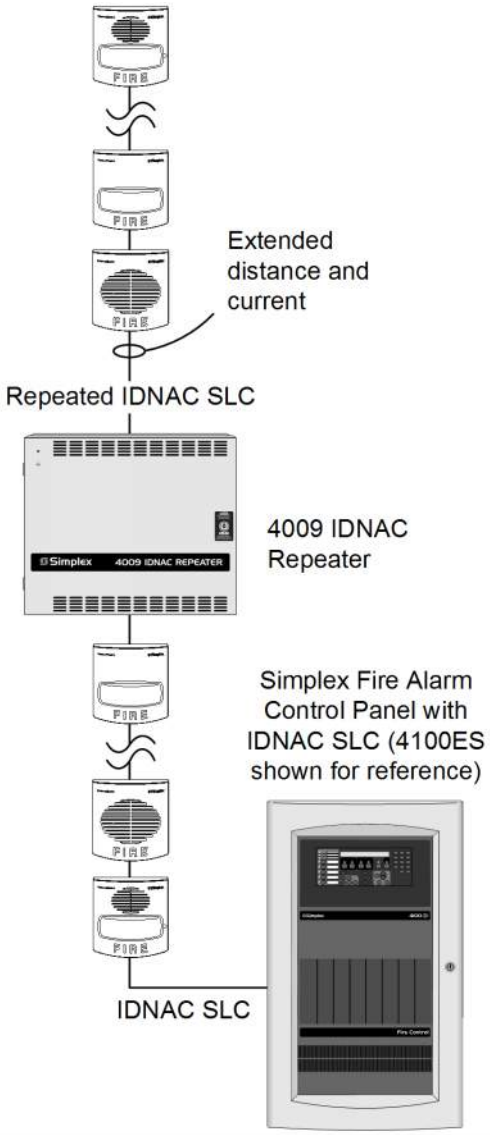

Figure 1: 4009 IDNAC Repeater Extends Distance and Current of IDNAC SLC

Class A Adapter 4009-9814:

- Required when extending a Class A loop or to provide a Class A local loop SLC output
- Operation provides short circuit isolation between input and output terminals for improved IDNAC SLC survivability

Built-in battery Charger

- Power supply charges up to 12.7 Ah batteries for in cabinet mounting and up to 25 Ah batteries with model 4009-9801 external battery cabinet

Available auxiliary output:

- A 200 mA, 29 VDC constant auxiliary output is available; operation is maintained during battery backup

* This product has been approved by the California State Fire Marshal (CSFM) pursuant to Section 13144.1 of the California Health and Safety Code. See CSFM Listing 7165 0026:0378 for allowable values and/or conditions concerning material presented in this document. NYC Fire Dept COA #6151. Additional listings may be applicable; contact your local Simplex product supplier for the latest status. Listings and approvals under Simplex Time Recorder Co. are the property of Tyco Fire Protection Products.

RSN: 1844554
Permit: 2024-2476680-LT
Sheet 18 of 68

Introduction

Repeating IDNAC SLCs

Simplex fire alarm control panels with IDNAC SLC outputs provide individual address and control of TrueAlert and TrueAlert ES addressable notification appliances. When an IDNAC SLC reaches the current limit or the distance limit of the source IDNAC SLC, use of 4009 IDNAC Repeaters extends the IDNAC SLC with an additional 3 A of SLC current and up to 139 unit loads of additional supervisory capacity.

With IDNAC SLCs, a constant 29 VDC source voltage is maintained in alarm, even during battery standby, allowing strobes to operate at higher voltage with lower current and ensuring a consistent current draw and voltage drop margin under both primary power and secondary battery standby. Efficiencies include wiring distances up to 2 to 3 times farther than with conventional notification, or support for more appliances per IDNAC SLC, or use of smaller gauge wiring, or combinations of these benefits, all providing installation and maintenance savings with high assurance that appliances that operate during normal system testing will operate during worst case alarm conditions.

Description

Three wiring configurations

Three wiring configurations are available to provide a variety of system solutions: Class B branch extension, Class A loop extension, and Class A riser to Class B branch extension or Class A loop output.

Class B branch input wiring

Class B branch input wiring allows T-tapped connections to up to five (5) parallel connected 4009 IDNAC Repeaters. Each Repeater has on-board output terminal connections for up to four (4) output branch circuits, and additional branch circuits can be externally T-tapped as required. (Refer to Wiring Reference, Class B Input with Class B Branch Circuit Outputs for additional details.)

Class A loop extensions use a single 4009 IDNAC Repeater to extend the current and distance of a single Class A loop allowing the loop distance to be doubled.

The Repeater communicates and repeats bi-directionally allowing Class A loop operation to be maintained in the event of an open circuit. This wiring connection requires use of the 4009-9814 Class A adapter. (Refer to Wiring Reference, Class A Loop Extension for additional details.)

Class A Riser to Class B Branches or Class A Loops

For applications requiring a combination of wiring types, a Class A riser can drive up to five (5) 4009 IDNAC Repeaters with each Repeater capable of driving either single or multiple Class B branch output(s) or a Class A loop output. In this wiring application, the Repeater does not repeat in the Class A riser loop, it is connected as an appliance with Class A in/out wiring. To create a Class A loop output, the Repeater must be equipped with a 4009-9814 Class A Adapter. (Refer to Wiring Reference, Class A Riser Input with Class A Loop and Class B Branch Outputs for additional details.)

Product Selection

Table 1: IDNAC Repeater Selection

Model*	Cabinet Color	Description
4009-9601(BA)	Platinum	4009 IDNAC Repeater with cabinet; provides a single 3 A IDNAC SLC output, 200 mA auxiliary power output, and battery charger; 120/240 VAC, 50/60 Hz input, auto-select
4009-9602(BA)	Red	
* Model numbers ending with BA suffix are assembled in the USA.		

Table 2: Aftermarket Accessories (installed on-site, select per system requirements)

Model	Description	
4009-9814	Class A Adapter Module, mounts on repeater controller board; required for Class A output	
2975-9813	Platinum semi-flush box trim	1 $^{7}/_{16}$" (37 mm) wide, four corners and trim pieces for top, bottom, and sides; (will need to be cut to fit 4009 IDNAC Repeater cabinet)
2975-9812	Red semi-flush box trim	

Table 3: External Accessories (select per system requirements)

Model	Description	Comments
4905-9929	Remote TrueAlert Communications Isolator	Refer to data sheet *S4905-0001* for details
4009-9801	External Battery Cabinet for 25 Ah batteries	16 ¼" W x 13 ½" H x 5 ¾" D (413 mm x 343 mm x 146 mm); refer to data sheet *S2081-0006* for details

Table 4: Battery Selection (select battery size per system requirements; two batteries are required for 24 VDC operation)

Model	Description	
2081-9272	6.2 Ah Battery, 12 VDC	
2081-9274	10 Ah Battery, 12 VDC	
2081-9288	12.7 Ah Battery, 12 VDC	
2081-9275	18 Ah Battery, 12 VDC	Requires 4009-9801 External Battery Cabinet
2081-9287	25 Ah Battery, 12 VDC	

RSN: 1844554
Permit: 2024-2476680-LT
Sheet 19 of 68

Wiring Reference, Class B Input with Class B Branch Circuit Outputs

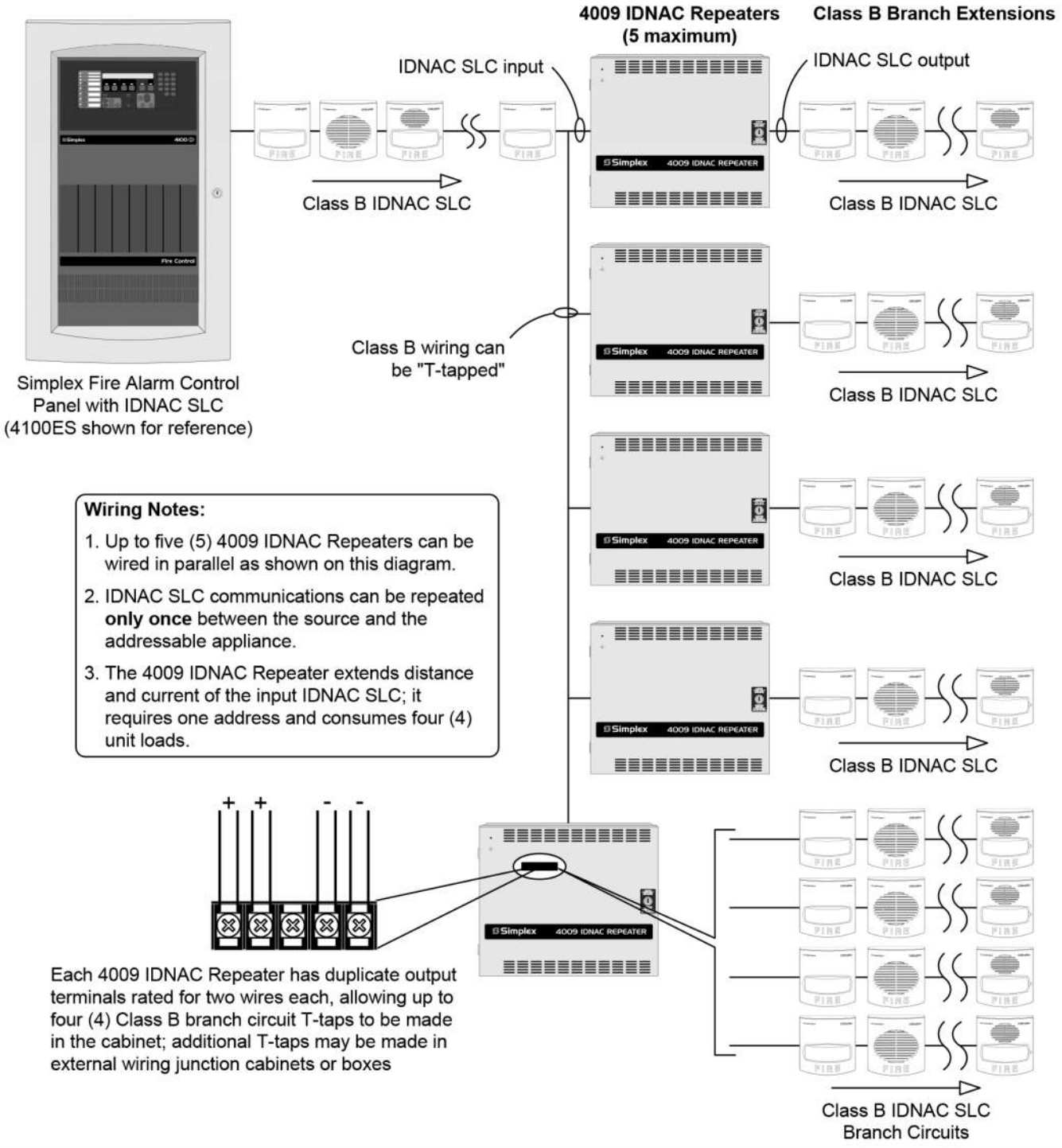

Figure 2: Wiring Reference

RSN: 1844554
Permit: 2024-2476680-LT
Sheet 20 of 68

Wiring Reference, Class A Loop Extension

Class A IDNAC SLC Loop with 4009 IDNAC Repeater Extending Loop Range and Power

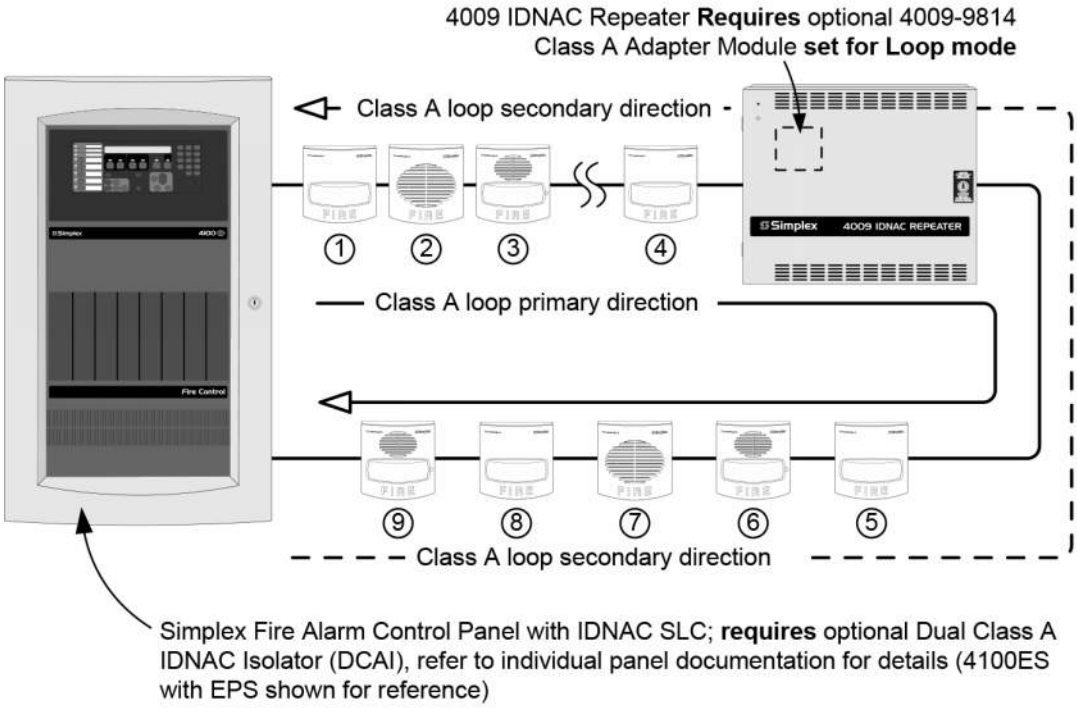

Notes:

1. Only one 4009 IDNAC Repeater can be wired in a Class A loop. (IDNAC SLC communications can be repeated **only once** between the source and the addressable appliance.)
2. The 4009 IDNAC Repeater extends distance and current of the Class A IDNAC SLC loop; it requires one address and consumes four (4) unit loads.
3. Under normal operating conditions (no open circuit wiring), appliances 1 through 4 are powered by the Panel Power Supply and appliances 5 through 9 are powered from the 4009 IDNAC Repeater.
4. Under open circuit conditions, an open circuit in the panel side of the primary path will result in the Panel Power Supply powering appliances 5 through 9 and the 4009 IDNAC Repeater will receive IDNAC SLC input from the return path and then power appliances 1 through 4, or as many as remain connected.

Figure 3: Wiring Reference

RSN: 1844554
Permit: 2024-2476680-LT
Sheet 21 of 68

Wiring Reference, Class A Riser Input with Class A Loop and Class B Branch Outputs

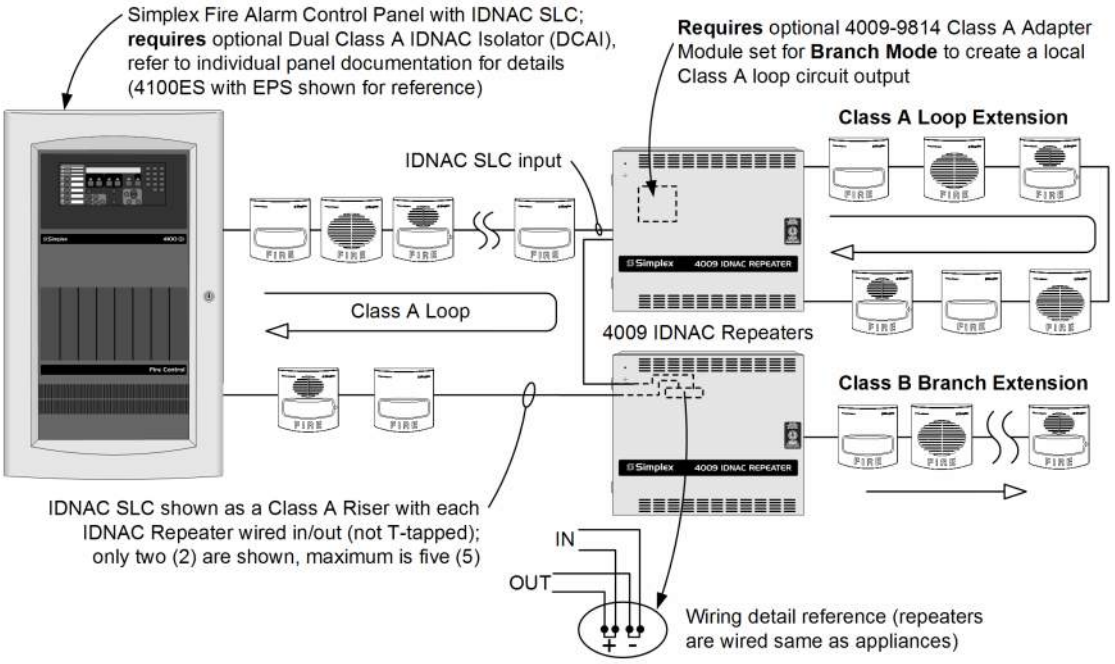

Figure 4: Wiring Reference

4009 IDNAC Repeater Mounting and Module Placement Reference

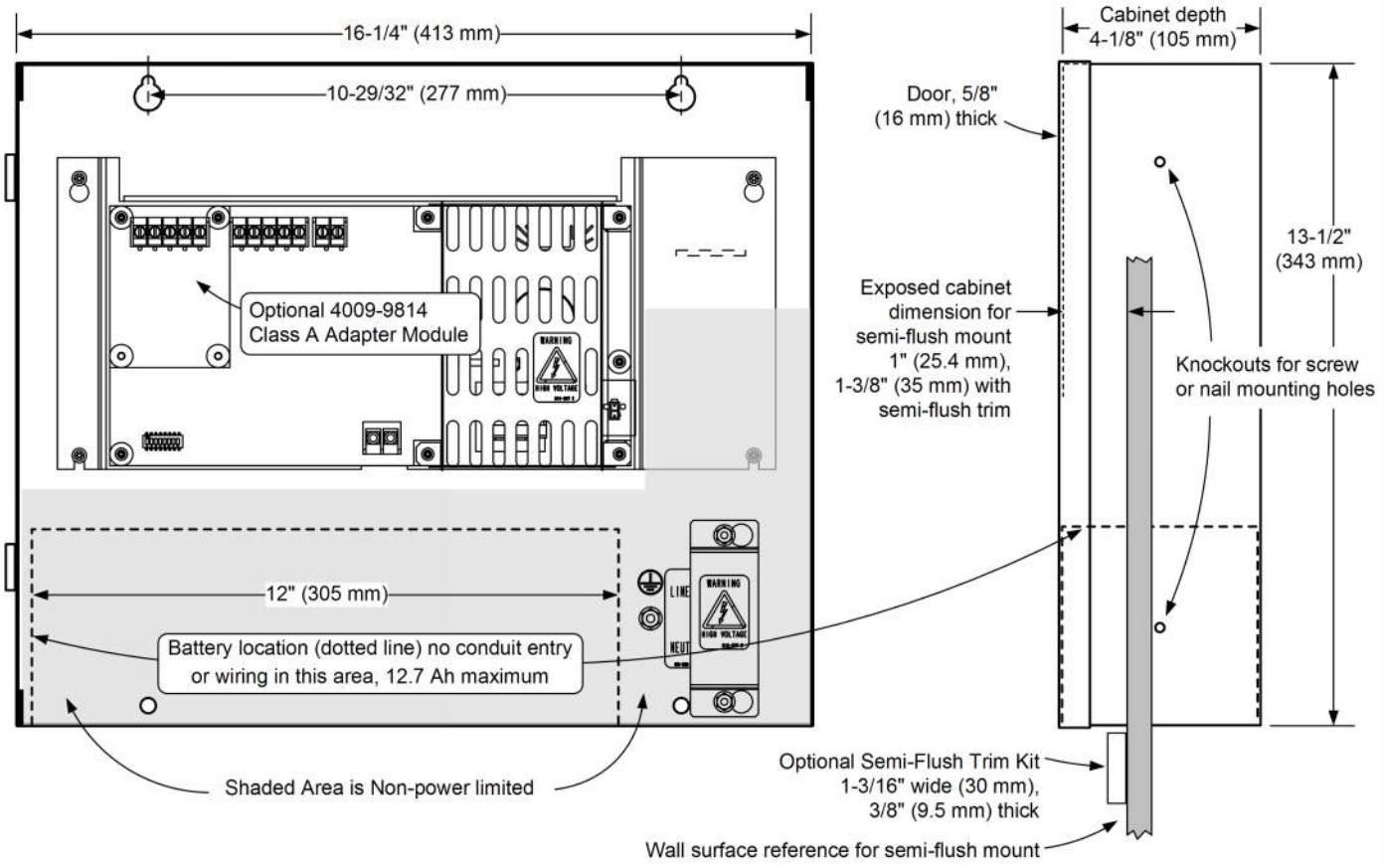

Figure 5: Placement Reference

RSN: 1844554
Permit: 2024-2476680-LT
Sheet 22 of 68

4009 IDNAC Repeater Specifications

Table 5: Input Ratings

Specification	Rating
Voltage Range	120 VAC, 50/60 Hz, or 220/230/240 VAC, 50/60 Hz, +10%, -15%, auto-select
120 VAC Current	2.5 A
220/230/240 VAC Current	1.25 A
IDNAC Input Ratings	17 VDC minimum
	1 address, 4 unit loads

Table 6: 24 VDC Requirements for Battery Calculations

Specification	Panel	IDNAC Appliances	Auxiliary Load
Standby Currents	70 mA	0.8 mA each	Output current (voltage is from battery)
Alarm Currents	96 mA	4.5 A maximum with 3 A IDNAC SLC load and 200 mA Auxiliary output load (actual alarm current depends on connected and activated appliances and devices)	1.37 x output current (voltage converter is on when in Alarm)

Table 7: Output Ratings

Specification		Rating
IDNAC SLC Output		3 A maximum @ 29 VDC for Special Application appliances
Compatible Special Application Appliances		Simplex TrueAlert ES and TrueAlert addressable notification appliances; contact your Simplex product representative for compatible appliances
IDNAC Repeater Loading and SLC Address Usage		Each repeater uses four unit loads on the IDNAC channel it receives power from and supports up to 139 additional unit loads. Most appliances are 1 unit load; Multi-Tone appliances are 2 unit loads; Repeaters and Isolators are 4 unit loads. Refer to individual appliance and device specifications for unit load requirements and rated SLC loading specifications.
		Each repeater uses one IDNAC SLC device address - the IDNAC Repeater does not increase the IDNAC channel device address capacity. Refer to the Host IDNAC SLC specifications for the device address capacity specifications on the IDNAC channel.
Auxiliary Output	Current	200 mA maximum
	Voltage	29 VDC nominal with AC present or when Repeater is on battery standby and in Alarm
		24 VDC nominal when on battery standby and not in Alarm

Table 8: IDNAC SLC Wiring Specifications (refer to installation instructions for more information)

Specification	Rating
Recommended wire type	UTP, unshielded twisted pair
Maximum wire length allowed with "T-Taps" for class B wiring	10,000 ft (3048 m)
Maximum wire length to any appliance	4000 ft (1219 m)
Wiring Connections	Terminal blocks for 18 to 12 AWG

Table 9: Repeater Status Indicators

Specification	Rating
Green AC Power LED	On with AC present, off during brownout or no AC condition
Red Communications LED (COMM)	Blinks when Repeater is communicating with the host control panel
Yellow System Status LEDs	4 LEDs provide up to 16 different trouble status indications; an on-board trouble scroll button allows review should multiple troubles occur

Table 10: 4009-9814 Class A Adapter Module Option (required for Class A loop extension or for Class A output)

Specifications	Rating
IDNAC SLC Output Voltage	3 A maximum @ 29 VDC for Special Applications appliances
	Two connections, Port A and Port B, function varies by application (loop extension or local loop), Port A and Port B are isolated from each other
Status LEDs	Two yellow trouble LED indicators, one for each port

Table 11: Environmental and Technical Publications Reference

Specification		Rating
Operating Temperature		32 °F to 120 °F (0 °C to 49 °C)
Operating Humidity Range		Up to 93% RH at 90 °F (32 °C)
Installation Instructions	4009 IDNAC Repeater	579-1019
	Class A Adapter Module	579-1080

© 2019 Johnson Controls. All rights reserved. All specifications and other information shown were current as of document revision and are subject to change without notice. Additional listings may be applicable, contact your local Simplex® product supplier for the latest status. Listings and approvals under Simplex Time Recorder Co. Simplex, and the product names listed in this material are marks and/or registered marks. Unauthorized use is strictly prohibited. NFPA 72 and National Fire Alarm Code are registered trademarks of the National Fire Protection Association (NFPA).

Simplex

Listings*

Fire Alarm Control Panel Accessories

System Batteries, Sealed Lead-Acid with Applications Reference for Battery Cabinets, and Battery Cabinets with Charger

Features

Rechargeable, sealed lead-acid batteries

- Lead-calcium grid structure with immobilized electrolyte in absorbent separator
- Low maintenance with no need to add water
- Low self-discharge characteristics
- One-piece, high-impact polystyrene cell cover with high-reliability dual-seal construction
- UL 924 recognized pressure relief valves

Battery sizes

- Batteries for internal mounting from 6.2 Ah to 50 Ah
- Larger batteries, up to 110 Ah, for mounting in external battery cabinets. Models with internal chargers are available.

Battery cabinets with chargers

Battery cabinets with chargers communicate with their connected fire alarm control unit (FACU) and are available for 4100ES/4010ES/4100U Series and 4010 Series FACUs.

Description

Simplex rechargeable sealed-lead acid batteries provide reliable and repeatable discharge and recharge characteristics for use in fire alarm and other systems applications. They feature immobilized electrolyte in an absorbent separator, which provides rated capacity on the first cycle.

Because of their sealed construction, packaging is possible within the system electronics enclosure, see Figure 3. When this is applicable, the quantity of system cabinets and the battery wiring distances are minimized. Where required, external battery cabinets can be close-nippled to the FACU to house larger batteries with battery chargers available in some battery cabinet sizes.

Battery details

Charging: Compatible with Simplex battery chargers.

Series connections: Connect the batteries in series to produce 24 V system voltage. Battery sets must be of identical voltage, model number, appearance, and have approximately the same date of manufacture for optimal operation.

Testing: Test battery capacity with a sealed lead-acid battery tester to withdraw a minimum of battery charge. Testing is available through your local Simplex product supplier.

Shipping: Sealed lead-acid batteries only ship by ground or sea transportation.

Disposal: Battery chemicals and materials can be recycled. Refer to information shipped with the battery or on its case. Return to the manufacturer or to a similarly qualified battery processing facility for proper disposal.

Seismic activity applications: Battery brackets are available for systems tested for compliance with specific batteries. Refer to data sheet *S2081-0019* for details.

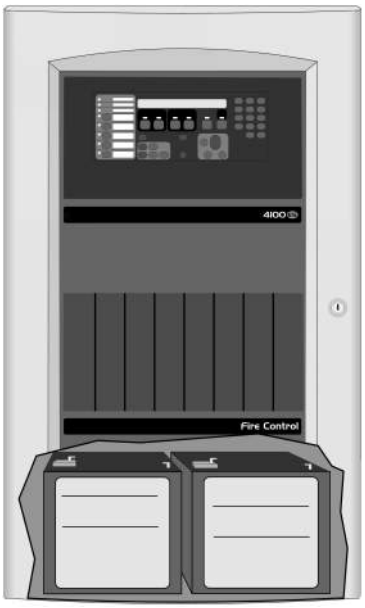

Figure 1: Compatible sealed lead-acid batteries inside an FACU cabinet

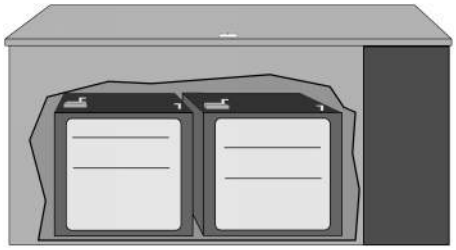

Figure 2: A remote battery cabinet for larger battery requirements

* Refer to page 4 for battery charger and cabinet agency listings. The batteries detailed in this document meet the requirements of UL, ULC, and Factory Mutual for use with respective equipment battery chargers as listed below. Contact your local Simplex product supplier for proper battery selection per system requirements. Listings and approvals under Simplex Time Recorder Co. are the property of Tyco Fire Protection Products.

RSN: 1844554
Permit: 2024-2476680-LT
Sheet 24 of 68

Battery construction reference

Actual appearance varies with battery size.

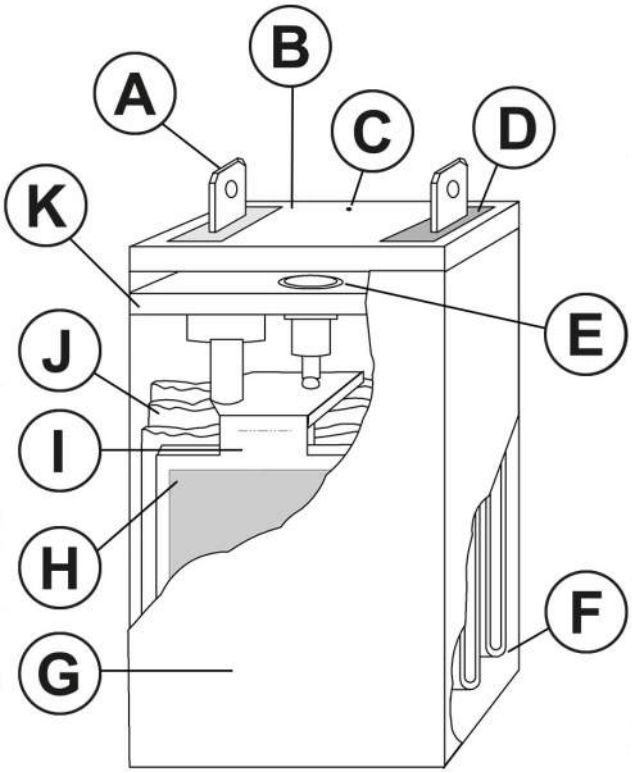

Figure 3: Battery contruction reference

Callout	Description	Callout	Description
A	Quick connect or post type terminal. Type varies with battery size.	B	Sealed outer cover
C	Vent hole	D	Potting material, black for negative, red for positive. Polarity is also clearly marked with + and -.
E	Pressure relief valve	F	Semi-permeable membrane separator
G	Cell case, high impact polystrene	H	Lead-calcium grids
I	Cell group	J	Absorbent separator used to immobilize electrolyte
K	Inner cover	-	-

Battery size specifications

Battery model	Capacity at 20 hour discharge rate	Width*	Depth*	Height with terminals	Approximate weight*
2081-9272	6.2 Ah	6.12 in. (156 mm)	2.65 in. (68 mm)	4 in. (102 mm)	5.75 lb (2.6 kg)
2081-9286	7.0 Ah	6.12 in. (156 mm)	2.65 in. (68 mm)	4 in. (102 mm)	5.75 lb (2.6 kg)
2081-9274	10 Ah	6 in. (153 mm)	4.06 in. (103 mm)	4 in. (102 mm)	9.2 lb (4.2 kg)
2081-9288	12.7 Ah	6 in. (153 mm)	4 in. (102 mm)	4 in. (102 mm)	9 lb (4.1 kg)
2081-9275	18 Ah	7.25 in. (184 mm)	3.38 in. (86 mm)	6.63 in. (168 mm)	14.3 lb (6.5 kg)
2081-9287	25 Ah	6.63 in. (168 mm)	5 in. (127 mm)	7 in. (178 mm)	19.4 lb (8.8 kg)
2081-9271 (rectangular case, typically for service)	33 Ah	12.5 in. (318 mm)	3.38 in. (86 mm)	7.06 in. (179 mm)	26.6 lb (12.1 kg)
2081-9276 (square case, use for new)	33 Ah	7.75 in. (197 mm)	5.25 in. (133 mm)	6.75 in. (171 mm)	26.5 lb (12 kg)
2081-9296	50 Ah	9 in. (229 mm)	5.5 in. (140 mm)	8.88 in. (225 mm)	41.8 lb (19 kg)
2081-9279	110 Ah	11.38 in. (289 mm)	10.5 in. (267 mm)	9 in. (230 mm)	82 lb (37 kg)

* Dimensions and weight are per battery and are for reference only. Exact size may vary. Refer to Battery compatibility for FACU mounting and External battery cabinet compatibility reference for mounting compatibility. Batteries are 12 V each and connected in series for 24 V system use.

Note: When wired in series for 24 V output, these batteries are to be of identical voltage, appearance, model number, and have approximately the same date of manufacture.

RSN: 1844554
Permit: 2024-2476680-LT
Simplex
Sheet 25 of 68

General battery specifications

Specifications	
Nominal Voltage Rating	12 V
Discharge Rating	20 hour rate
Typical Charge/Discharge Cycles	100 cycles to 150 cycles
Preferred Charge Temperature Range	60°F to 90°F (15.6°C to 32.2°C)

Battery compatibility for FACU mounting

Note: Refer to individual FACU product data sheets for additional battery application information.

Table 1: Battery compatibility for FACU mounting

Simplex FACU model series										
Battery Model	**Capacity**	**4003EC**	**4004R**	**4007ES & 4005**	**4006 & 4008**	**4009 (all models)**	**4010**	**4010ES**	**4100ES/ 4100U**	**4100 & 4120 (2, 4 or 6-Unit)**
2081-9272	6.2 Ah	Yes	Yes	Yes	Yes	Yes	Yes	Yes	Yes	Yes
2081-9286	7.0 Ah	Yes	Yes	Yes	Yes	Yes	Yes	Yes	Yes	Yes
2081-9274	10 Ah	Yes	Yes	Yes	Yes	Yes	Yes	Yes	Yes	Yes
2081-9288	12.7 Ah	Yes	Yes	Yes	Yes	Yes	Yes	Yes	Yes	Yes
2081-9275	18 Ah	Ext	Note 3	Yes	Ext	Ext	Note 2	Yes	Yes	Yes
2081-9287	25 Ah	Ext	Note 3	Ext	Ext	N/A	Yes	Yes	Yes	Yes
2081-9271 rectangular	33 Ah	Ext	Note 3	Ext	N/A	N/A	Note 3	Yes	Yes	Ext
2081-9276 square	33 Ah	Ext	Note 3	N/A	N/A	N/A	Note 3	Yes	Yes	Yes
2081-9296	50 Ah	N/A	Note 3	N/A	N/A	N/A	Note 3	Note 4	2 or 3 bay	Ext
2081-9279	110 Ah	Requires external battery cabinet, compatible with 4100ES, 4010ES, 4100, and 4120 Series only								

Yes = Compatible with included FACU cabinet.

Ext = Requires external battery cabinet, refer to External battery cabinet specification reference.

Note:

1. These batteries meet the requirements of UL, ULC, and Factory Mutual for use with respective equipment battery chargers listed above. Contact your local Simplex product supplier for proper battery selection per system requirements.
2. 4010 Cabinets accommodate 2081-9275, 18 Ah batteries, but do not allow bottom entry conduit.
3. Use 4081 series companion cabinet and charger, refer to External battery cabinet specification reference.
4. For two bay cabinets only, 50 Ah batteries will fit in the cabinet.

External battery cabinet compatibility reference

Table 2: External battery cabinet compatibility reference

Battery cabinets without chargers, connected to FACU charger							
Cabinet	**Panel compatibility**	**Battery**					
		2081-9275 18 Ah*	2081-9287 18 Ah*	2081-9271 Rectangular 33 Ah	2081-9276 Square 33 Ah	2081-9296 50 Ah	2081-9279 110 Ah
2081-9280	4100ES, 4010ES, 4100U, and 4100+	N/A	N/A	N/A	N/A	N/A	Yes
2081-9281	multiple	Yes	Yes	Yes	Yes	Yes	N/A
2081-9282							
4009-9801	multiple	Yes	Yes**	N/A	Yes	N/A	N/A

Table 3: External battery cabinet compatibility reference

Battery cabinets with chargers							
Cabinet	**Panel compatibility**	**Battery**					
		2081-9275 18 Ah*	2081-9287 18 Ah*	2081-9271 Rectangular 33 Ah	2081-9276 Square 33 Ah	2081-9296 Square 50 Ah	2081-9279 110 Ah
4081-9301 4081-9302	4004R and 4010	Yes	Yes	Yes	Yes	Yes	N/A
4081-9306 4081-9308	4100ES, 4010ES and 4100U	N/A	N/A	N/A	N/A	Yes	Yes

* Batteries smaller than those listed are normally mounted in the product cabinet

** 25 AH capacity is effective as of 7/2005

Yes = Compatible with included FACU cabinet

RSN: 1844554
Permit: 2024-2476680-LT
Sheet 28 of 68

External battery cabinet specification reference

Table 4: Battery cabinets without chargers, shallow design with front door

Model	Color	Listings	Description		Dimensions
2081-9281	Beige	UL and CSFM	2-Unit, 4100 style cabinet without charger; with locking solid door and battery shelf, primarily for use with 50 Ah batteries		25.75 in. W x 20.75 in. H x 6.75 in. D (654 mm x 527 mm x 171 mm)
2081-9282	Red	UL			
4003-9860*	Beige	FM	For use with 4003EC systems, for batteries up to 33 Ah (refer to 4003EC data sheet S4003-0002)		9.5 in. H x 24 in. W x 9 in. D (241 mm x 610 mm x 229 mm)
4009-9801*	Beige	UL, ULC, and FM	For batteries up to 33 Ah	External battery cabinet without charger, with locking solid door and battery harness; for close-nippled mounting to FACU cabinet	16.25 in. W x 13.5 in. H x 5.75 in. D (413 mm x 343 mm x 146 mm)*
* Depth increased for 2081-9276 square 33 Ah batteries effective 7/2005.					

Table 5: Battery cabinet without charger, deep design with hinged lid

Model	Color	Listings	Description	Dimensions
2081-9270	Red	UL	Battery cabinet without charger; cabinet has vented front, and hinged lid with support rod and lock on top	26.5 in. W x 12 in. H x 12 in. D (673 mm x 305 mm x 305 mm)

Table 6: Chargers for use with 4010 FACUs and 4004R suppression release systems, refer to data sheet S4081-0001

Model	Color	Listings	Input voltage	Description	Dimensions
4081-9301	Beige	UL and FM	120 VAC	Battery cabinet with charger for the 4010 and 4004R FACU, for batteries up to 50 Ah, with front door	22.5 in. W x 16.75 in. H x 8.38 in. D (572 mm x 425 mm x 213 mm)
4081-9302	Red				

Table 7: Battery cabinet without charger for 110 Ah batteries, for use with compatible FACU mounted chargers, refer to data sheet S2081-0012

Model and listing	Color	Listings	Cabinet description	Compatible chargers	Charger description	Dimensions
2081-9280	Red	UL, ULC, CSFM	Battery cabinet without charger for 2081-9279, 110 Ah batteries. Includes 80 A battery fuse, terminals and battery connection cables. See data sheet for details.	4100-9xxx Series	4100ES/4100U Power Supplies for Master Controller/CPU Bays	26.5 in. W x 12 in. H x 12 in. D (673 mm x 305 mm x 305 mm)
				4100-5401	4100ES Additional ES Power Supply (ES-PS)	
				4100-5111 4100-5113	4100ES/4100U Additional SPS	
				4100-5311 4100-5313	4100ES Additional EPS+	
				4100-5325 4100-5327	4100ES Additional EPS	
				4100-5125 4100-5127	4100ES/4100U Remote Power Supply (RPS)	
				4100-5120 4100-5122	4100ES/4100U TrueAlert Addressable Power Supply (TPS)	
				4100-0104 4100-0114 4100-0124	4100 legacy power supplies	

Table 8: Battery cabinet with charger for 110 Ah batteries, for use with compatible FACU mounted chargers, refer to data sheet S2081-0012

Model	Color	Listings	Input voltage	Description	Dimensions
4081-9306	Red	UL, ULC, FM, MEA (NYC)	120 VAC	Battery cabinet with charger for batteries up to 110 Ah	27.88 in. W x 13.5 in. H x 14.63 in. D (708 mm x 343 mm x 371 mm)
4081-9308	Red	UL, ULC, FM	220/230/240 VAC, multi-tapped		
4100-9837	Green LED Power-on Indicator Kit, required for ULC listing, mounts above access panel using knockout provided				

© 2022 Johnson Controls. All rights reserved. All specifications and other information shown were current as of document revision and are subject to change without notice. Additional listings may be applicable, contact your local Simplex® product supplier for the latest status. Listings and approvals under Simplex Time Recorder Co. Simplex, and the product names listed in this material are marks or registered marks. Unauthorized use is strictly prohibited. NFPA 72 and National Fire Alarm Code are registered trademarks of the National Fire Protection Association (NFPA).

Simplex

*UL, ULC, CSFM Listed; FM Approved**

TrueAlarm Analog Sensors – Photoelectric and Heat, Standard Bases and Accessories

Features

TrueAlarm analog sensing

You can use TrueAlarm analog sensing to digitally transmit analog sensor values with IDNet or MAPNET II two-wire communications.

You can use True Alarm analog sensing with the following Simplex products:

- 4007ES, 4010, 4010ES, 4100ES, and 4100U series fire alarm control units (FACUs), and 4008 series FACUs with reduced feature set.
- 4020, 4100, and 4120 series FACUs, Universal Transponders, and 2120 TrueAlarm CDTs equipped for MAPNET II operation

Features compatible with the FACU

- Peak value logging with accurate analysis of each sensor for individual sensitivity selection
- Sensitivity monitoring meets NFPA 72 sensitivity testing requirements. The automatic individual sensor calibration check verifies sensor integrity
- Automatic environmental compensation, multi-stage alarm operation, and display of sensitivity directly in percent for each foot
- Display and print detailed sensor information in English

Photoelectric smoke sensors features

- Sensitivity levels from 0.2% to 3.1%. See TrueAlarm sensors for more information.

Heat sensors features

- Three fixed temperature sensing thresholds: 135°F, 155°F and 190°F
- Rate-of-rise temperature sensing
- Utility temperature sensing
- Listed to UL 521 and ULC-S530

General features

- Ceiling or wall mounting
- Listed to UL 268 7th Edition and ULC-S529
- NEMA 1 rated. See TrueAlarm analog sensing product selection chart for more information.
- Louvered smoke sensor design enhances smoke capture by directing flow to chamber. Entrance areas are minimally visible when ceiling mounted
- Designed for EMI compatibility
- Magnetic testing
- Different bases support a supervised or unsupervised output relay, or a remote LED alarm indicator

Additional base reference

- For isolator bases, refer to data sheet *S4098-0025*
- For isolator2 bases, refer to data sheet *S4098-0026*
- For sounder bases, refer to data sheet *S4098-0028*
- For photo/heat sensors, refer to data sheet *S4098-0024* , single address and *S4098-0033* , dual address

Description

Digital communication of analog sensing

TrueAlarm analog sensors provide an analog measurement digitally communicated to the host control panel using Simplex addressable communications. The control unit analyses the data, determines an average value, and stores it. Comparing the sensor's present value against its average value and time, determines an alarm or other abnormal condition.

Intelligent data evaluation

Monitoring each sensor's average value provides a continuously shifting reference point. A software filtering process compensates for environmental factors, such as dust and dirt, and component aging, to provide an accurate reference for evaluating new activity. This reduces the probability of false or nuisance alarms caused by shifts in sensitivity.

Control unit selection

The control unit stores peak activity for each sensor for evaluating specific locations. The host control unit determines the alarm set point for each TrueAlarm sensor, selectable as more or less sensitive as the individual application requires.

Figure 1: 4098-9714 TrueAlarm photoelectric sensor mounted in base

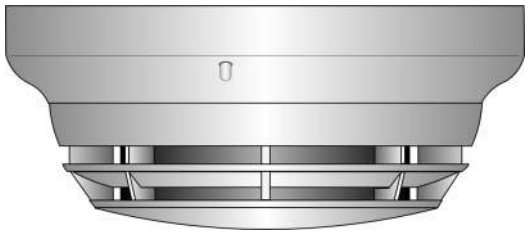

Timed/multi-stage selection

You can program the sensor alarm set points for timed automatic sensitivity selection, such as more sensitive at night or less sensitive during day. You can program the control unit to provide multi-stage operation for each sensor.

Sensor alarm and trouble LED indication

Each sensor base's LED pulses to indicate communications with the unit. If the control unit determines a sensor is in alarm, is dirty, or has some other type of trouble, the details display at the control unit and the sensor's base LED turn on steadily. During a system alarm, an LED indicating a trouble returns to pulsing to help identify the alarmed sensors.

TrueAlarm sensor bases and accessories

Sensor base features

Base mounted address selection

- Address remains with its programmed location
- Accessible from front, DIP switch under sensor

General features

- Automatic identification provides default sensitivity when substituting sensor types
- Integral red LED for power-on, pulsing, or alarm or trouble, steady on
- Locking anti-tamper design mounts on standard outlet box
- Magnetically-operated functional test

* These products have been approved by the California State Fire Marshal (CSFM) pursuant to Section 13144.1 of the California Health and Safety Code. See CSFM Listings 7272-0026:218, 7271-0026:231, 7270-0026:216, and 7300-0026:217 for allowable values and/or conditions concerning material presented in this document. Additional listings may be applicable, contact your local Simplex product supplier for the latest status. Listings and approvals under Simplex Time Recorder Co. are the property of Tyco Fire Protection Products.

RSN: 1844554
Permit: 2024-2476680-LT
Sheet 28 of 68

Sensor bases

4098-9792, standard sensor base

4098-9789, sensor base with wired connections

- 2098-9808 remote LED alarm indicator or 4098-9822 relay. The relay is unsupervised and requires separate 24 VDC.

Supervised relay bases not compatible with 2120 CDT:

- **4098-9791, four-wire sensor base,** use with remote or locally mounted 2098-9737 relay, requires separate 24 VDC
- **4098-9780, two-wire sensor base,** use with remote or locally mounted 4098-9860 relay, no separate power required
- You can program supervised relay operation, and manually operate it from the control unit
- Includes wired connections for remote LED alarm indicator **or** 4098-9822 relay, relay is unsupervised and requires separate 24 VDC

Sensor base options

2098-9737, remote or local mount supervised relay

- DPDT contacts for resistive or suppressed loads
- power limited rating of 3 A at 28 VDC
- non-power limited rating of 3 A at 120 VAC, requires external 24 VDC coil power

4098-9860, remote or local mount supervised relay

- SPDT dry contacts, power limited rating of 2 A at 30 VDC, resistive. Non-power limited rating of 0.5 A at 125 VAC, resistive

4098-9822, LED annunciation relay

- Activates when base LED is on steady, indicating local alarm or trouble
- DPDT contacts for resistive or suppressed loads, power limited rating of 2 A at 28 VDC. Non-power limited rating of 1/2 A at 120 VAC, requires external 24 VDC coil power

4098-9832, adapter plate

- Required for surface or semi-flush mounting to 4 in. square electrical box and for surface mounting to a 4 in. octagonal box
- You can use the 4098-9832 adapter plate for cosmetic retrofitting to an existing 6 3/8 in. diameter base product

2098-9808, remote red LED alarm indicator

- Mounts on single gang box

Figure 2: Remote red LED alarm indicator

Description

TrueAlarm sensor bases contain integral addressable electronics that monitor the status of the detachable photoelectric or heat sensors. The sensors transmit digitalized output to the system fire alarm control unit every four seconds.

You can change different TrueAlarm sensor types to meet location requirements. You can use this feature to substitute sensors during building construction. When conditions are temporarily dusty, you can install heat sensors without reprogramming the control unit. Although the control unit indicates an incorrect sensor type, the heat sensor operates at a default sensitivity and provides heat detection for building protection at that location.

Mounting reference

Figure 3: Mounting reference

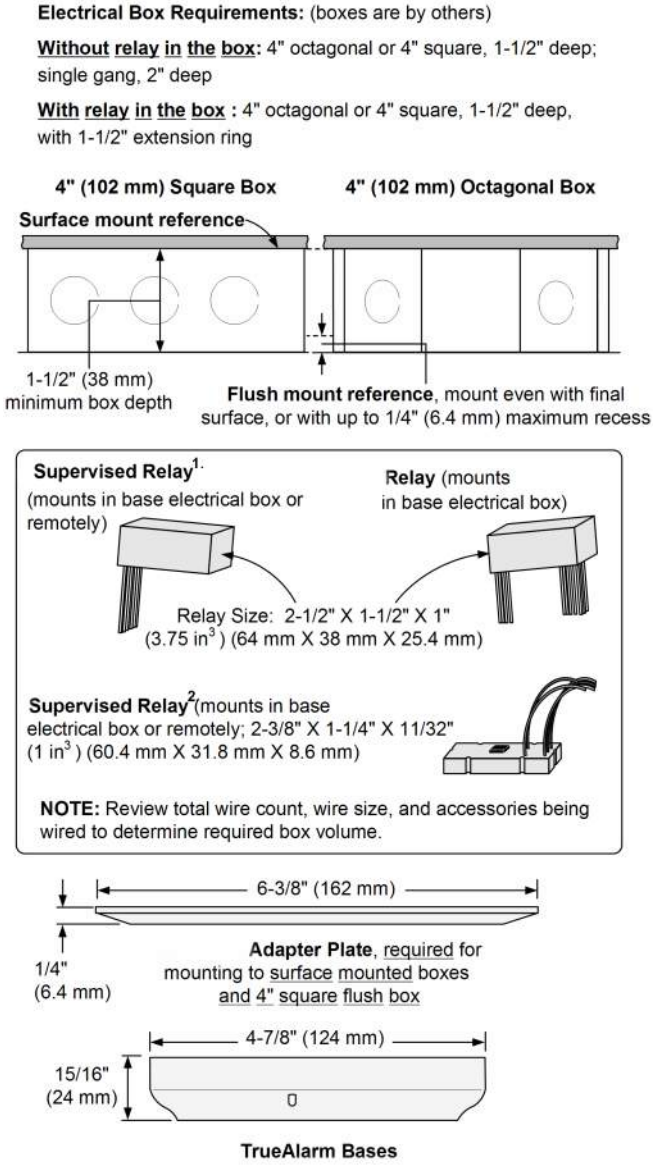

Table 1: Product mounting - SKU reference

Product	SKU
Relay	4098-9822
Supervised relay	Example 1 2098-9739 Example 2 4098-9860
Adapter plate	4098-9832
TrueAlarm bases	4098-9780, 4098-9789, 4098-9791, 4098-9792

RSN: 1844554
Permit: 2024-2476680-LT
Sheet 29 of 68

TrueAlarm sensors

Features

- Sealed against rear air flow entry
- Interchangeable mounting
- EMI/RFI shielded electronics
- Heat sensors:
  - Selectable rate-compensated, fixed temperature sensing with or without rate-of-rise operation

Table 2: Rated spacing distance between sensors

Fixed Temp. Setting	UL and ULC Spacing	FM Spacing, Either Fixed Temperature Setting
135°F (57.2°C) 190°F (88°C)	60 ft x 60 ft (18.3 m)	20 ft x 20 ft (6.1 m) for fixed temperature only. RTI = Quick
155°F (68°C)	40 ft x 40 ft (12.2 m)	50 ft x 50 ft (15.2 m) for fixed temperature with either rate-of-rise selection. RTI = Ultra Fast

Note: 190°F (88°C) ratings only apply to the 4098-9734 sensor.

Smoke sensors

- Photoelectric technology sensing
- 360° smoke entry for optimum response
- Built-in insect screens

4098-9714 photoelectric sensor

TrueAlarm photoelectric sensors use a stable, pulsed LED light source and a silicon photodiode receiver to deliver low power smoke sensing. There are three user-selectable sensitivities for special applications for each individual sensor: 0.2%, 0.5%, and 1% for each foot. Standard sensitivity is 1.25% to 3.1% for each foot. The fire alarm control unit can vary the sensitivity for normal applications between 1.25% and 3.1% for each foot.

Note: Fixed sensitivity settings higher than 1.0% for each foot are not UL268 7th Edition compliant.

The sensor head design provides 360° smoke entry for response to smoke from any direction. Due to its photoelectric operation, air velocity is not normally a factor, except for impact on area smoke flow.

Figure 4: 4098-9714 photoelectric sensor with base

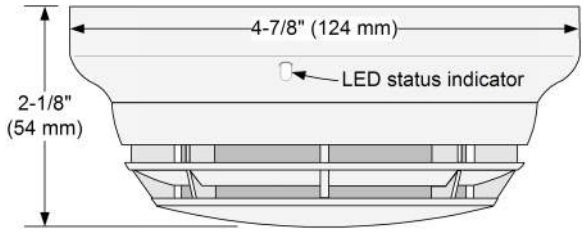

4098-9733 and 4098-9734 heat sensors

TrueAlarm heat sensors are self-restoring and provide rate-compensated, fixed temperature sensing with or without rate-of-rise temperature sensing. The sensor measures the local temperature for analysis at the fire alarm control unit.

You can select rate-of-rise temperature detection at the control unit for either 15°F or 20°F, (8.3°C or 11.1°C) for each minute. Fixed temperature sensing is independent of rate-of-rise sensing and you can program it to operate at 135°F or 155°F (57.2°C or 68°C). The 4098-9734 sensor provides an additional 190°F (88°C) set point.

In a slowly developing fire, the temperature may not increase rapidly enough to operate the rate-of-rise feature. However, when the temperature reaches the rated fixed temperature setting, it triggers an alarm.

You can program TrueAlarm heat sensors as a utility device to monitor for temperature extremes in the range of 32°F to 155°F (0°C to 68°C). This feature can provide freeze warnings, or alert you to HVAC system problems. Refer to panel specifications for availability.

Figure 5: 4098-9733 heat sensor with base

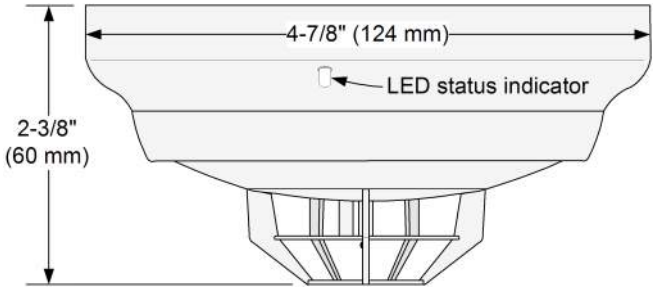

Figure 6: 4098-9734 high temperature heat sensor with base

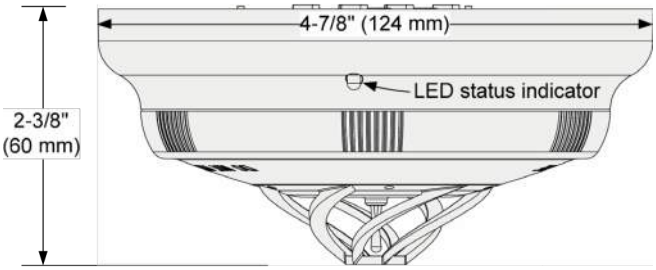

WARNING: In most fires, hazardous levels of smoke and toxic gas can build up before a heat detection device would initiate an alarm. In cases where Life Safety is a factor, the use of smoke detection is highly recommended.

Application reference

Only choose sensor locations after careful consideration of the physical layout and contents of the area that you want to protect. Refer to NFPA 72, *the National Fire Alarm and Signaling Code*. On smooth ceilings, you can use a smoke sensor spacing of 30 ft (9.1 m) as a guide.

For detailed application information including sensitivity selection, refer to *4098 Detectors, Sensors, and Bases Application Manual (574-709)*.

RSN: 1844554
Permit: 2024-2476680-LT
Sheet 30 of 68

TrueAlarm analog sensing product selection chart

Table 3: TrueAlarm sensor bases, for use with sensors 4098-9714 and 4098-9733

SKU	Color	Description	Compatibility	Mounting requirements
4098-9792	White	Standard sensor base	No options	4 in. octagonal or 4 in. square box, 1 1/2 in. min. depth, or single gang box, 2 in. min. depth
4098-9776	Black			
4098-9789 4098-9789IND	White	Sensor base with connections for remote LED alarm indicator **or** unsupervised relay	2098-9808 remote alarm indicator or 4098-9822 unsupervised relay	4 in. octagonal or 4 in. square box **Note:** Box depth requirements depend on total wire count and wire size. See Table 5
4098-9775	Black			
4098-9791 **Note:** NOT compatible with the 2120 CDT	White	Four-wire sensor supervised relay base with connections for LED indicator or unsupervised relay	2098-9737 supervised remote relay	
			2098-9808 remote alarm indicator or 4098-9822 unsupervised relay	
4098-9780 **Note:** NOT compatible with the 2120 CDT	White	Two-wire sensor supervised relay base with connections for LED indicator or unsupervised relay	4098-9860 supervised remote relay	
			2098-9808 remote alarm indicator or 4098-9822 unsupervised relay	

Note: SKU numbers ending in IND are assembled in India.

Refer to *4098 Detectors, Sensors, and Bases Application Manual (574-709)* and *4098 Smoke/Heat Sensor Bases Installation Instructions (574-707)* for additional information.

Table 4: TrueAlarm sensors

SKU	Color	Description	Compatibility	Mounting requirements
4098-9714 4098-9714-IND	White	Photoelectric smoke sensor	Bases 4098-9775, 4098-9776, 4098-9792, 4098-9789, 4098-9791, and 4098-9780	Refer to base requirements
4098-9774	Black			
4098-9733	White	Heat sensor		
4098-9778	Black			
4098-9734	White	High temperature heat sensor		

Note:

- SKUs are NEMA 1 rated.
- The 4098-9734 Heat Sensor is only compatible with IDNet on the 4100ES, 4010ES, and 4007ES

Table 5: TrueAlarm sensor and base accessories

SKU	Description	Compatibility	Mounting requirements
2098-9737	Supervised relay, mounts remote or in base electrical box	4098-9791 base	Remote mounting requires 4 in. octagonal or 4 in. square box, 1 1/2 in. minimum depth Base mounting requires 4 in. octagonal box, 2 1/8 in. deep with 1 1/2 in. extension ring
4098-9860	Supervised relay, mounts remote or in base electrical box	4098-9780 base	
2098-9808	Remote red LED alarm indicator on single gang stainless steel plate	Bases 4098-9789, 4098-9791, and 4098-9780	Single gang box, 1 1/2 in. minimum depth
4098-9822	Unsupervised relay, tracks base led status. **Note:** Only mounts in base electrical box.	Bases 4098-9789, 4098-9791, and 4098-9780	4 in. octagonal box, 2 1/8 in. deep with 1 1/2 in. extension ring
4098-9832	Adapter plate	Bases 4098-9792, 4098-9789, 4098-9791, and 4098-9780	Required for surface or semi-flush mounted 4 in. square box and for surface mounted 4 in. octagonal box

Note: 2098-9808 is NEMA 1 rated.

Specifications

Table 6: General operating specifications

Specification	Rating
Communications and sensor supervisory power	IDNet or MAPNET II communications, auto-selected, one address for each base
Communications connections	Screw terminals for in/out wiring, 18 to 14 AWG, 0.82 mm^2 to 2.08 mm^2
Remote LED alarm indicator current	1 mA typical, no impact to alarm current
Remote LED alarm indicator and relay connections	Color coded wire leads, 18 AWG, 0.82 mm^2
UL listed operating temperature range	32°F to 100°F, 0°C to 38°C

RSN: 1844554
Permit: 2024-2476680-LT
Sheet 31 of 68

Table 6: General operating specifications

Specification		Rating
Operating temperature range	with 4098-9733 Heat Sensor	32°F to 122°F, 0°C to 50°C
	with 4098-9714 Smoke Sensor	15°F to 122°F, -9°C to 50°C
	with 4098-9734 Heat Sensor	32°F to 150°F, 0°C to 66°C
Storage temperature range		0°F to 140°F, -18°C to 60°C
Humidity range		10% to 95% RH
4098-9714 smoke sensor air velocity rating		0 to 4000 ft/min, 0 to 1220 m/min
Housing color		Frost white or black

Table 7: 4098-9791 Base with supervised remote relay 2098-9737

Specification	Rating
Externally supplied relay coil voltage	18 VDC to 32 VDC, nominal 24 VDC
Supervisory current	270 µA, from 24 VDC supply
Alarm current with 2098-9737 relay	28 mA, from 24 VDC supply
Note: See Sensor base options for contact ratings.	

Table 8: 4098-9780 Base with supervised remote relay 4098-9860

Specification	Rating
Power	Supplied from communications

Table 9: 4098-9822 Unsupervised relay, requirements for bases 4098-9789, 4098-9791, and 4098-9780

Specification	Rating
Externally supplied relay coil voltage	18 VDC to 32 VDC, nominal 24 VDC
Supervisory current	Supplied from communications
Alarm current	13 mA from separate 24 VDC supply
Note: See Sensor base options for contact ratings.	

© 2023 Johnson Controls. All rights reserved. All specifications and other information shown were current as of document revision and are subject to change without notice. Additional listings may be applicable, contact your local Simplex® product supplier for the latest status. Listings and approvals under Simplex Time Recorder Co. Simplex, and the product names listed in this material are marks or registered marks. Unauthorized use is strictly prohibited. NFPA 72 and National Fire Alarm Code are registered trademarks of the National Fire Protection Association (NFPA).

Simplex

*UL, ULC, CSFM Listed; FM Approved **

Multi-Application Peripherals

IDNet or MAPNET II Communicating Devices Addressable Manual Stations

Features

Individually addressable manual fire alarm stations with:

- Power and data supplied by IDNet or MAPNET II addressable communications using a single wire pair
- Operation that complies with ADA requirements
- Visible LED indicator that flashes during communications and is on steady when the station has been activated
- The NO GRIP Single Action Station and Retrofit Kit are available with a more easily operated pull lever for applications where anticipated users may find the standard station lever difficult to activate
- Pull lever that protrudes when alarmed
- Break-rod supplied (use is optional)
- Models are available with single or double action (breakglass or push) operation
- UL listed to Standard 38
- NEMA 1 rated. See Addressable manual station product selection for more information.

Compatible with the following Simplex control panels:

- Model Series 4007ES, 4008, 4010, 4010ES, 4100ES, 4100U, 4020, 4100, and 4120 fire alarm control panels equipped with either IDNet or MAPNET II communications
- Model Series 2120 Communicating Device Transponders (CDTs) equipped with MAPNET II communications

Compact construction:

- Electronics module enclosure minimizes dust infiltration
- Allows mounting in standard electrical boxes
- Screw terminals for wiring connections

Tamper resistant reset key lock, keyed same as Simplex fire alarm cabinets.

Multiple mounting options:

- Surface or semi-flush with standard boxes or matching Simplex boxes
- Flush mount adapter kit
- Adapters are available for retrofitting to commonly available existing boxes

Description

The Simplex addressable manual station combines the familiar Simplex manual station housing with a compact communication module that is easily installed to satisfy demanding applications. Its integral individual addressable module (IAM) constantly monitors status and communicates changes to the connected control panel through IDNet or MAPNET II communications wiring.

Operation

Activation of the 4099-9004 single action manual station requires a firm downward pull to activate the alarm switch. Completing the action breaks an internal plastic break-rod which is visible below the pull lever, use is optional. The use of a break-rod can be a deterrent to vandalism without interfering with the minimum pull requirements needed for easy activation. The pull lever latches into the alarm position and remains extended out of the housing to provide a visible indication.

Single Action NO GRIP Station 4099-9021. For applications such as California Building Code, Title 24, which requires "Controls and operating mechanisms shall be operable with one hand and shall not require tight grasping, pinching or twisting of the wrist" the model 4099-9021 station provides a more easily operated pull lever compared to standard stations. Retrofit of existing stations is available using the 4099-9805 Retrofit kit.

Double Action Stations (Breakglass) require the operator to strike the front mounted hammer to break the glass and expose the recessed pull lever. The pull lever then operates as a single action station.

4099-9004
Single action

4099-9021 NO
GRIP Single action

4099-9805 NO
GRIP Retrofit kit

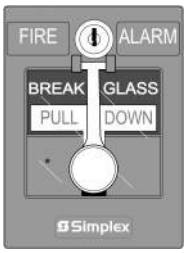

4099-9005 Breakglass

4099-9006 Push

With 2099-9828
Institutional Cover kit

Double Action Stations (Push Type) require that a spring loaded interference plate, marked PUSH, be pushed back to access the pull lever of the single action station.

Station reset requires the use of a key to reset the manual station lever and deactivate the alarm switch. If you use the break-rod, you must replace it.

Station testing is performed by physical activation of the pull lever. You can also perform electrical testing by unlocking the station housing to activate the alarm switch.

RSN: 1844554
Permit: 2024-2476680-LT
Sheet 34 of 68

Specifications

Refer to *4099 MAPNET II/ IDNet Addressable Manual Pull Station with LED Installation Instructions 579-1135* for additional information.

Table 1: Specifications

Specification	Rating
Power and communications	IDNet or MAPNET II communications, 1 address for each station
Address means	DIP switch, 8 position
Wire connections	Screw terminal for in/out wiring, for 18 AWG to 14 AWG wire (0.82 mm^2 to 2.08 mm^2)
UL listed temperature range	32°F to 120°F (0°C to 49°C) intended for indoor operation
Humidity range	Up to 93% RH at 100°F (38°C)
Housing color	Red with white raised lettering
Material	Housing and pull lever are Lexan polycarbonate or equal
Pull lever color	White with red raised lettering
Housing dimensions	5 in. H x 3 3/4 in. W x 1 in. D (127 mm x 95 mm x 25 mm)

Addressable manual station semi-flush mounting

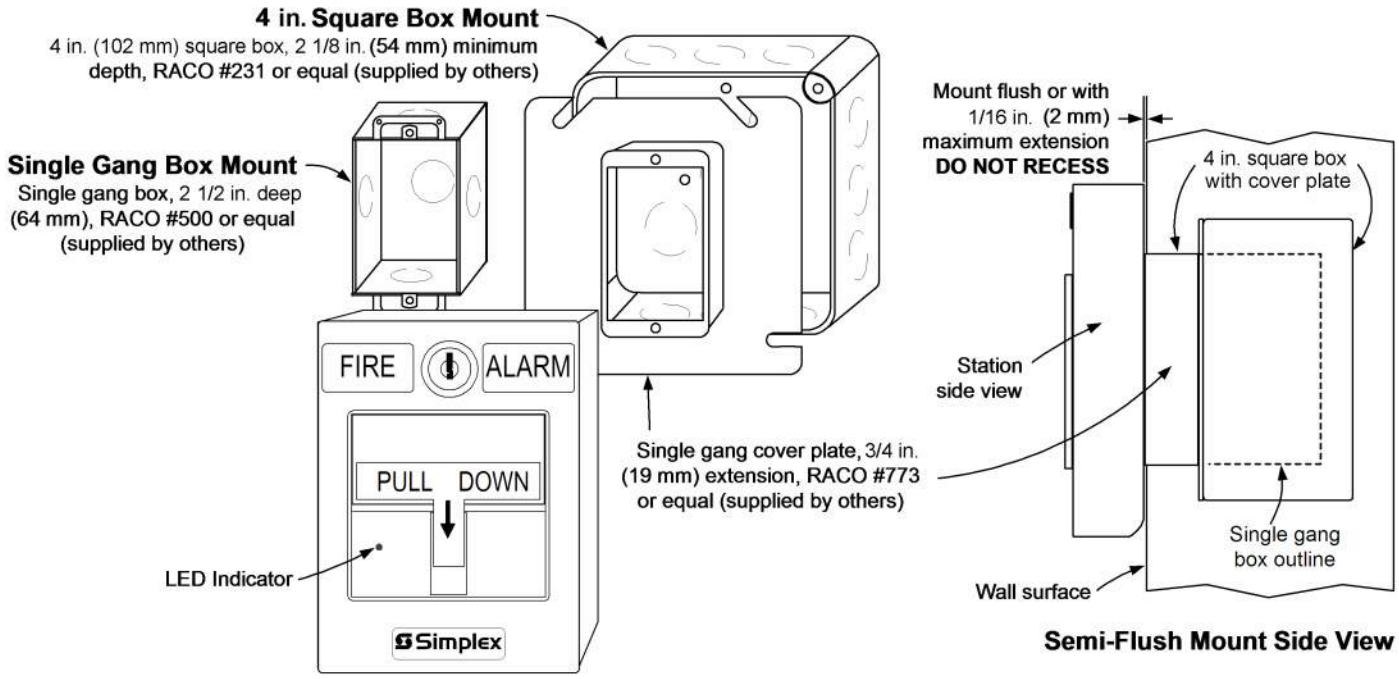

Figure 1: Addressable manual station semi-flush mounting

RSN: 1844554
Permit: 2024-2476680-LT
Sheet 35 of 68

Addressable manual stations surface mounting

Preferred mounting. For surface mounting of these addressable manual stations, the preferred electrical boxes are shown in Figure 2.

Additional mounting reference. See Addressable manual station, additional mounting information for Wiremold box mounting compatibility.

Figure 2 shows the 2975-9178 box and the 2975-9022 cast box.

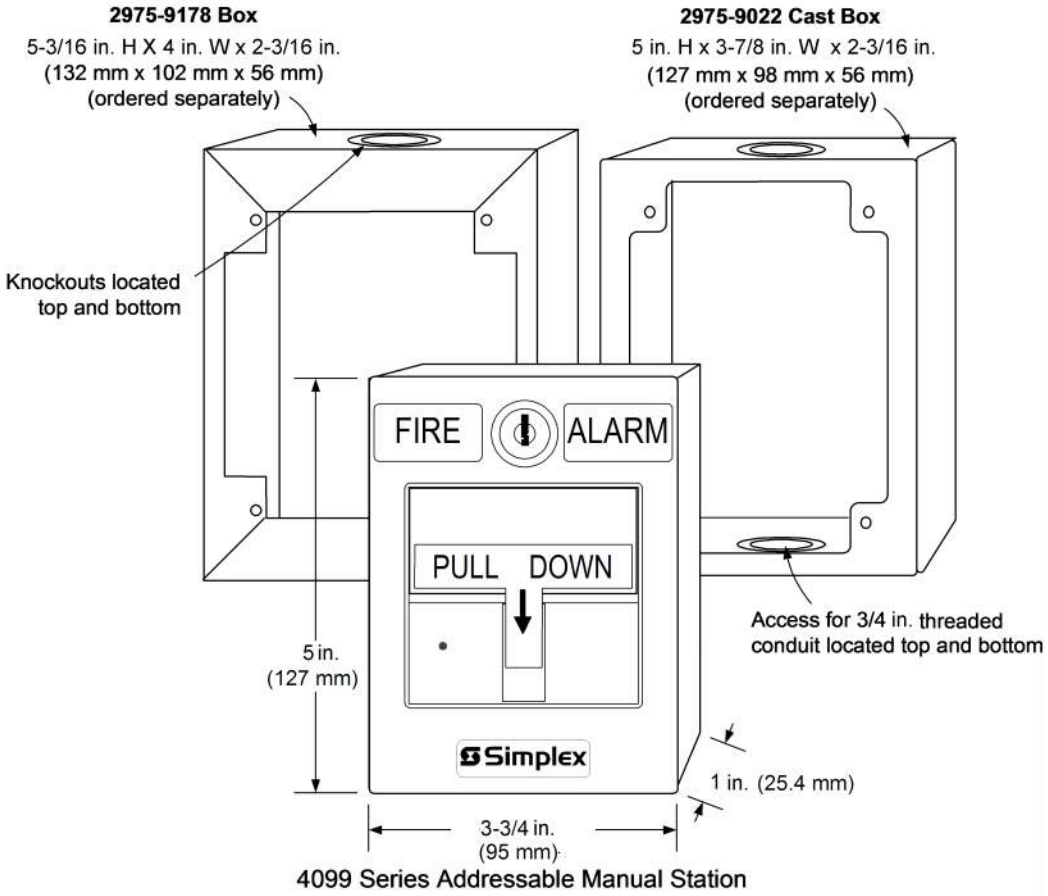

Figure 2: 4099 Series addressable manual station

RSN: 1844554
Permit: 2024-2476680-LT
Sheet 36 of 68

Surface mount side view with internal detail

Figure 3 shows the 2975-9178 box.

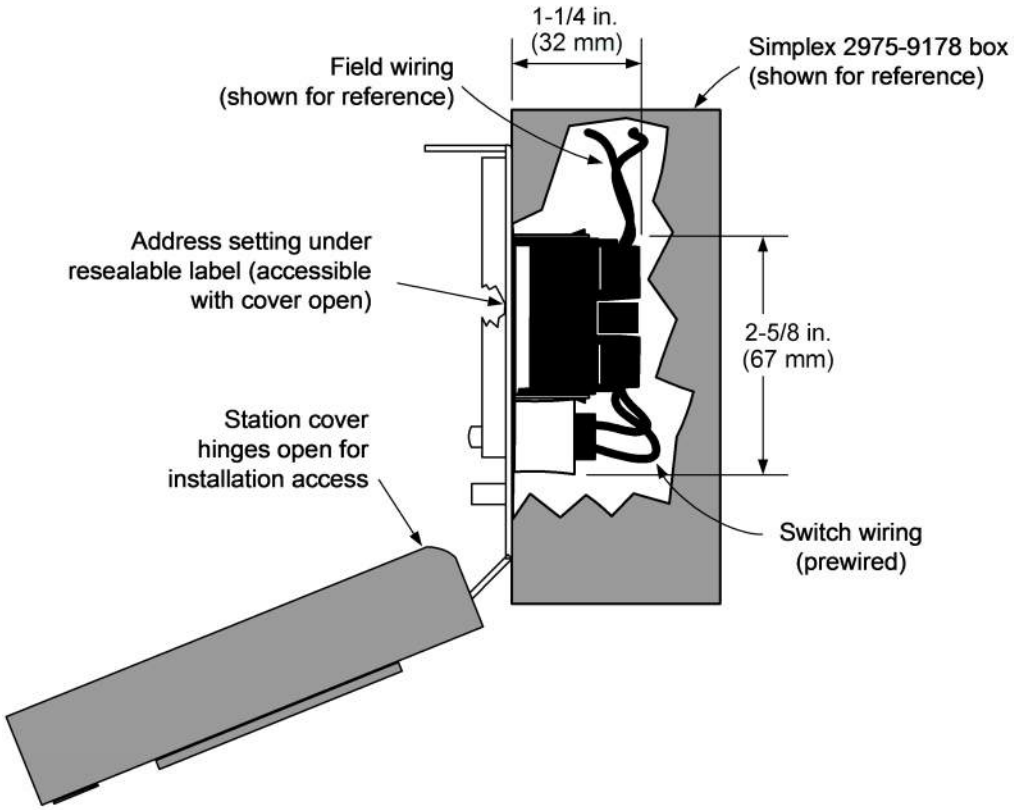

Figure 3: Surface mount side view with internal detail

Application reference

Refer to NFPA 72, the *National Fire Alarm and Signaling Code*, and all applicable local codes for complete requirements for manual stations. The following summarizes the basic requirements:

1. Stations shall be located in the normal path of exit and distributed in the protected area such that they are unobstructed and readily accessible.
2. Mounting shall be with the operable part not less than 42 in. (1.07 m) and not more than 48 in. (1.22 m) above floor level.
3. At least one station shall be provided on each floor. Additional stations shall be provided to obtain a travel distance not more than 200 ft (61 m) to the nearest station from any point in the building.
4. When manual station coverage appears limited in any way, additional stations should be installed.

RSN: 1844554
Permit: 2024-2476680-LT
Sheet 37 of 68

Addressable manual station, additional mounting information

For retrofit and new installations, additional compatible mounting boxes and the required adapter plates are shown in Figure 4. Figure 4 shows the 2099-9814 surface trim for Wiremold boxes and the 2099-9813 semi-flush trim for 2 gang switch boxes.

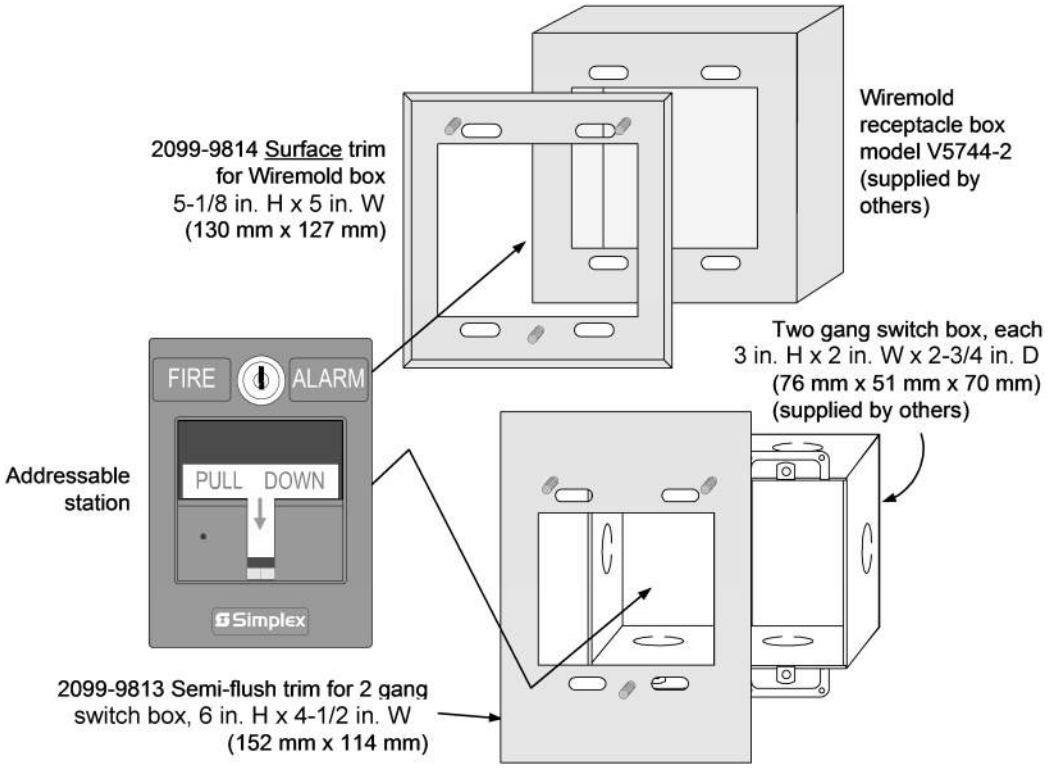

Figure 4: Addressable manual station, additional mounting information

Addressable manual station, flush mounting information

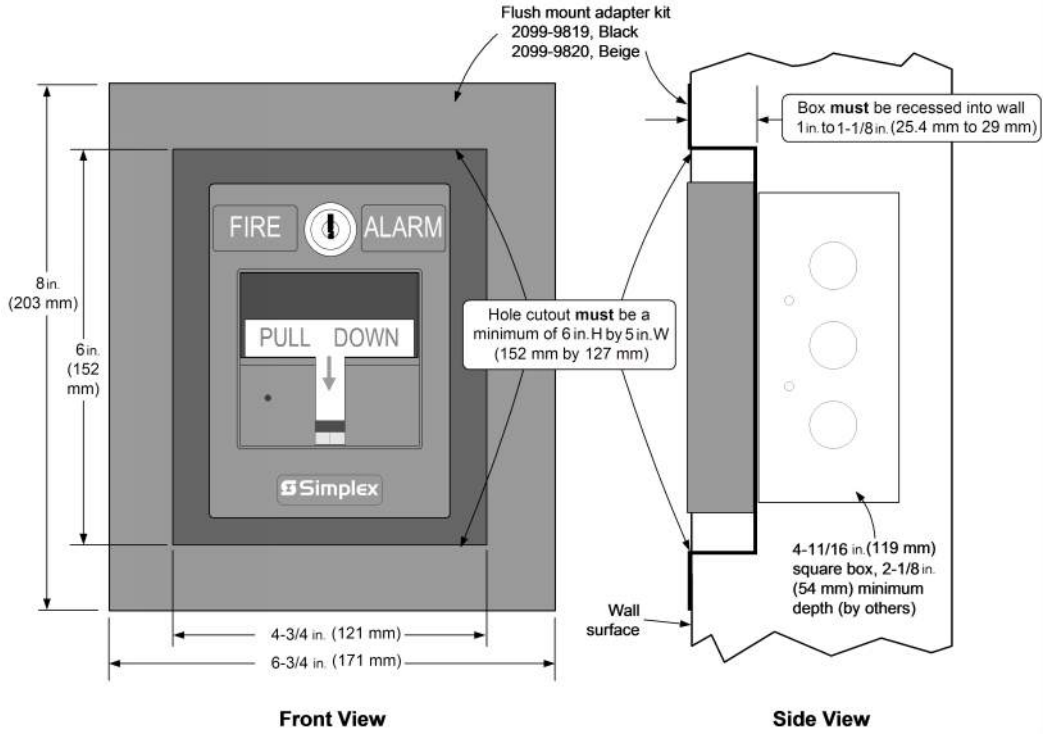

Figure 5: Addressable manual station, flush mounting information

The flush mount adapter kit is available in beige (2099-9820) or black (2099-9819).

RSN: 1844554
Permit: 2024-2476680-LT
Sheet 38 of 68

Addressable manual station product selection

Table 2: Addressable manual station product selection red housing with white letters and white pull lever

Model	Description	Housing	Pull lever	Listings
4099-9004, see note	Single Action, English	FIRE ALARM	PULL DOWN	UL, ULC, FM, CSFM
4099-9004CB, see note	Single Action, Bilingual English and French	FEU FIRE	TIREZ PULL	ULC
4099-9004CF, see note	Single Action, French	ALARME FEU	ABAISSEZ	
4099-9004PO, see note	Single Action, Portuguese	FOGO ALARME	PUXE	UL, FM
4099-9004SP, see note	Single Action, Spanish	ALARMA FUEGO	JALE	
4099-9005, see note	Double Action, Breakglass operation, English	FIRE ALARM	PULL DOWN	UL, ULC, FM, CSFM
4099-9005PO, see note	Double Action, Breakglass operation, Portuguese	FOGO ALARME	PUXE	UL, FM
4099-9005SP, see note	Double Action, Breakglass operation, Spanish	ALARMA FUEGO	JALE	
4099-9006, see note	Double Action, Push operation, English	FIRE ALARM	PUSH PULL DOWN	UL, ULC, FM, CSFM
4099-9006PO, see note	Double Action, Push operation, Portuguese	FOGO ALARME	EMPURRE PUXE	UL, FM
4099-9006SP, see note	Double Action, Push operation, Spanish	ALARMA FUEGO	EMPUJE JALE	
4099-9021, see note	Single Action NO GRIP operation, English	FIRE ALARM	PULL DOWN	UL, ULC, FM, CSFM

Note: NEMA 1 rated when used with 2975-9178 back box.

Table 3: Accessories

Model	Description
2975-9022	Cast aluminum surface mount box, red
2975-9178	Surface mount steel box, red
2099-9813	Semi-flush trim plate for double gang switch box, red
2099-9819	Flush mount adapter kit, black
2099-9820	Flush mount adapter kit, beige
4099-9805	Retrofit Kit for field conversion of a single action station to a NO GRIP station; refer to the ***NO GRIP Actuator (4099-9805) Installation Instructions 579-1007*** for details
2099-9803	Replacement breakglass
2099-9804	Replacement break-rod
2099-9828	Institutional cover kit for field installation on 4099-9004; **Note:** Covers LED indicator
2099-9814	Surface trim plate for Wiremold box V5744-2, red
2099-9822	Replacement retaining clip for breakglass
252-019	B key for manual station reset.

© 2021 Johnson Controls. All rights reserved. All specifications and other information shown were current as of document revision and are subject to change without notice. Additional listings may be applicable, contact your local Simplex® product supplier for the latest status. Listings and approvals under Simplex Time Recorder Co. Simplex, and the product names listed in this material are marks and/or registered marks. Unauthorized use is strictly prohibited. NFPA 72 and National Fire Alarm Code are registered trademarks of the National Fire Protection Association (NFPA).

Simplex®

TrueAlarm Analog Sensing

*UL, ULC, CSFM Listed; FM Approved; MEA (NYC) Acceptance**

Addressable Duct Sensor Housings with TrueAlarm Photoelectric Sensor; Available with Multiple Relay Control

Features

Compact air duct sensor housing with clear cover to monitor for the presence of smoke**

Includes factory installed TrueAlarm photoelectric smoke sensor and features:

- Individual sensor information processed by the host control panel to determine sensor status
- Digital transmission of analog sensor values via IDNet or MAPNET II, 2-wire communications
- Programmable sensitivity, consistent accuracy, environmental compensation, status testing, and monitoring of sensor dirt accumulation

Model 4098-9755:

- Basic duct sensor housing (no relay output) powered by IDNet/MAPNET II communications

Model 4098-9756:

- Duct sensor housing with supervised output for multiple remote relays; requires separate 24 VDC; includes one relay
- Relay output is under panel control
- At the panel, relay output can be activated manually or in response to a separate alarm or other input

General features:

- UL listed to Standard 268A
- Clear cover allows visual inspection
- Test ports provide functional smoke testing access with cover in place
- Mounts to rectangular ducts or round ducts; minimum size is 8" (203 mm) square or 18" (457 mm) diameter
- Magnetic test feature for alarm initiation at housing
- Optional weatherproof enclosure is available separately (refer to data sheet S4098-0032)

Diagnostic LEDs (on interface board):

- Red Alarm/Trouble LED for sensor status and communications polling display
- Yellow LED for open or shorted trouble indication of supervised relay control (4098-9756 only)

Sampling tubes (ordered separately):

- Available in multiple lengths to match duct size
- Installed and serviced with housing in place

Remote module options (ordered separately):

- Remote red status/alarm LED (2098-9808)
- Remote test station with LED (2098-9806)
- 4098-9843 remote relays (refer to page 2 for details)

* These products have been approved by the California State Fire Marshal (CSFM) pursuant to Section 13144.1 of the California Health and Safety Code. See CSFM Listing 3240-0026.241 for allowable values and/or conditions concerning material presented in this document. Accepted for use – City of New York Department of Buildings – MEA35-93E. Additional listings may be applicable; contact your local Simplex product supplier for the latest status. Listings and approvals under Simplex Time Recorder Co. are the property of Tyco Fire Protection Products.

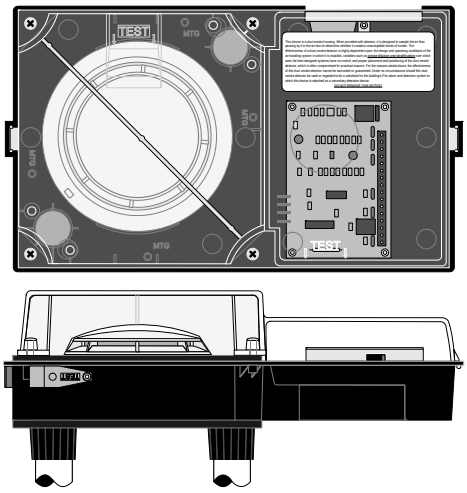

Duct Sensor Housing, Front and Bottom View

2098-9808 2098-9806

Remote Status/Alarm Indicator and Test Station

Introduction

Operation. Simplex® compact air duct smoke sensor housings provide TrueAlarm operation for the detection of smoke in air conditioning or ventilating ducts. Sampling tubes are installed into the duct allowing air to be directed to the smoke sensor mounted in the housing.

TrueAlarm Sensor Operation

Digital Communication of Analog Sensing. Analog information from the sensor is digitally communicated to the control panel where it is analyzed. Sensor input is stored and tracked as an average value with an alarm or abnormal condition being determined by comparing the sensor's present value against its average.

Intelligent Data Evaluation. Monitoring each photoelectric sensor's average value provides a software filtering process that compensates for environmental factors (dust, dirt, etc.) and component aging, providing an accurate reference for evaluating new activity. The result is a significant reduction in the probability of false or nuisance alarms caused by shifts in sensitivity, either up or down.

** Please note that smoke detection in air ducts is intended to provide notification of the presence of smoke *in the duct*. It is not intended to, and will not, replace smoke detection requirements for open areas or other non-duct applications.

TrueAlarm Sensor Operation *(Continued)*

Control Panel Selection. Peak activity per sensor is stored to assist in evaluating specific locations. The alarm set point for each sensor is determined at the control panel, selectable as the individual application requires.

Sensor Status LED. Each sensor housing's red status LED (located on the electrical interface board) pulses to indicate communications with the panel. If the control panel determines that a sensor is in alarm, or that it is dirty or has some other type of trouble, the details are annunciated at the control panel and that sensor housing's status LED will be turned on steadily. During a system alarm, the control panel will control the LEDs such that an LED indicating a trouble will return to pulsing to help identify any alarmed sensors. (Remote Status/Alarm LEDs track the operation of the sensor housing LED.)

Photoelectric Sensing

TrueAlarm photoelectric sensors use a stable, pulsed infrared LED light source and a silicon photodiode receiver to provide consistent and accurate low power smoke sensing.

Photoelectric Sensing *(Continued)*

Typically duct sensor applications require less sensitive settings (such as 2.5% per foot obscuration) due to the ducts being a relative dirty environment. However, the standard seven levels of TrueAlarm sensor sensitivity are available for each individual sensor, ranging from 0.2% to 3.7% per foot of smoke obscuration. Sensitivity is selected and monitored at the fire alarm control panel.

Fire Alarm Control Panel Features

- Individual smoke sensitivity selection
- Sensitivity monitoring that satisfies NFPA 72 sensitivity testing requirements
- Peak value logging allows accurate analysis for sensitivity selection
- Automatic, once per minute individual sensor calibration check verifies sensor integrity
- Automatic environmental compensation
- Smoke sensitivity is displayed in percent per foot
- Ability to display and print detailed sensor information in plain English language
- Relays of model 4098-9756 are under panel control for ON, OFF, or override

Duct Sensor Selection Chart

Duct Smoke Sensor Housing with Photoelectric Sensor*

Model	Description	Compatibility
4098-9755	Basic Duct Sensor Housing; operating power is supplied by either IDNet or MAPNET II communications (no relay output)	4007ES, 4008, 4010, 4010ES, 4020, 4100, 4100ES, 4100E, and 4120. Also 2120 CDT if configured for MAPNET II, TrueAlarm operation
4098-9756	Duct Sensor Housing with supervised multiple relay output, requires separate 24 VDC fire alarm power and 4081-9008 end-of-line resistor harness; includes one 4098-9843 relay	Same as above except relay operation is not compatible with 2120 CDT; Relay output is for up to 15 total 4098-9843 Relays (additional relays are ordered separately)

Remote LED Indicator and Test Station, Select One if Required

Model	Description	Compatibility	Mounting
2098-9808	Red LED status indicator on single-gang stainless steel plate	4098-9755 4098-9756	Use single gang box, 3" H x 2" W x 2" D (76 mm x 51 mm x 51 mm)
2098-9806	Test Station with keyswitch and red LED status indicator, on single-gang stainless steel plate; (turning switch to "TEST" initiates alarm for system testing)		

Epoxy Encapsulated Remote Relay and End-of-Line Resistor

Model	Description	Compatibility	Location
4098-9843	Relay; single Form C (7 A @ 120 VAC); refer to pages 3 and 4 for additional relay information; one included with 4098-9756; wiring is 18 AWG (0.82 mm^2) color coded wire leads	4098-9756 only; connect up to 15	Locate relays within 3 ft (1 m) of device being controlled per NFPA 72
4081-9008	End-of-Line Resistor Harness; 10 kΩ, 1/2 W; (ref. 733-894); required to supervise remote relay coil connection	4098-9756	At last relay location

* Each duct housing includes an internally mounted model 4098-9714 TrueAlarm photoelectric sensor and an exhaust tube. A correctly sized sampling tube (ordered per application) is required, refer to chart below.

Sampling Tube Selection Chart, Ordered Separately Per Duct Width, Select One

Overall Duct Width	Tube Required	Suggested Cut Length
12" (305 mm)	**4098-9854**	1/2" (12.7 mm) longer than duct width
13" to 23" (330 mm to 584 mm)	**4098-9855**	1/2" (12.7 mm) longer than duct width
24" to 46" (610 mm to 1168 mm)	**4098-9856**	3 in" (76 mm) longer than duct width
46" to 71" (1168 mm to 1803 mm)	**4098-9857**	3 in" (76 mm) longer than duct width
71" to 95" (1803 mm to 2413 mm)	**4098-9858**	3 in" (76 mm) longer than duct width

Duct Sensor Housing Detail Reference

NOTE: Refer to Installation Instructions 574-776 for additional installation detail and maintenance information.

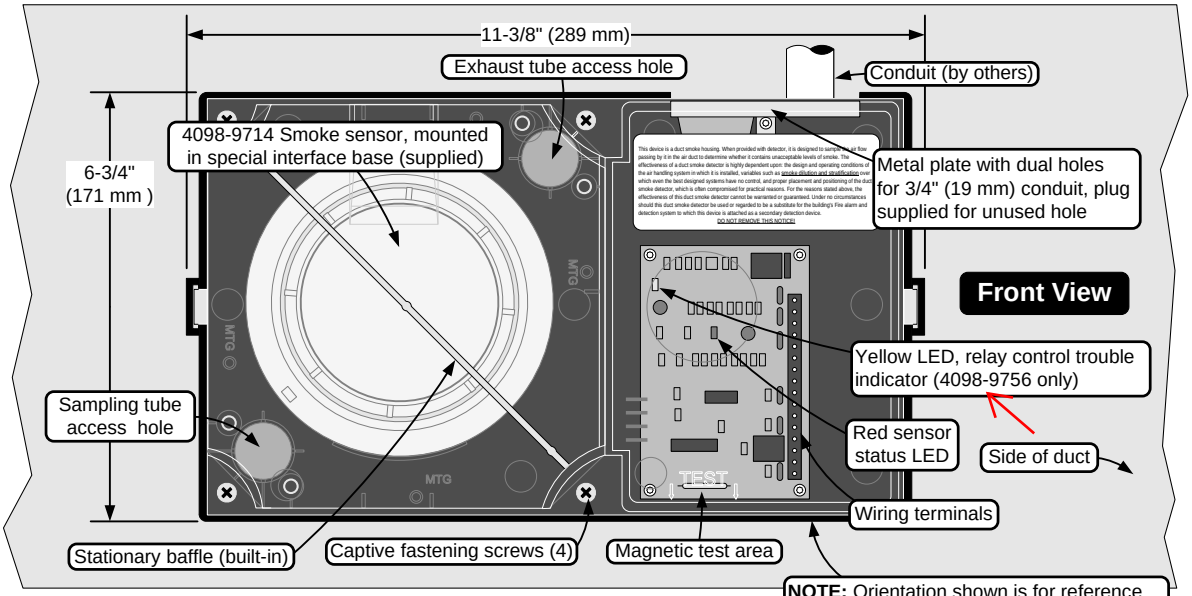

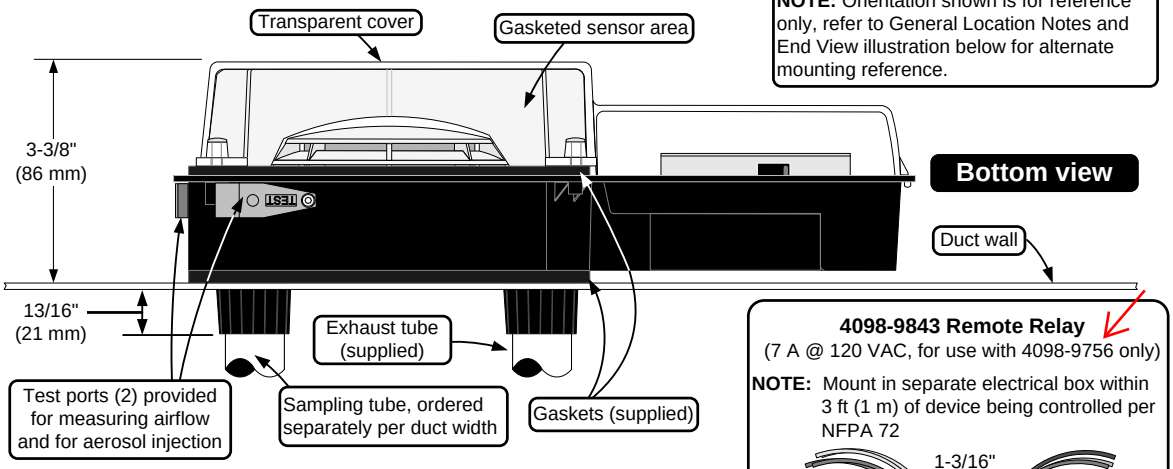

4098-9843 Remote Relay
(7 A @ 120 VAC, for use with 4098-9756 only)

NOTE: Mount in separate electrical box within 3 ft (1 m) of device being controlled per NFPA 72

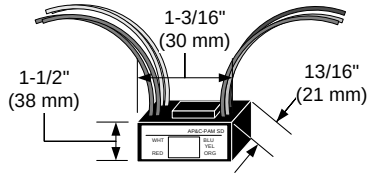

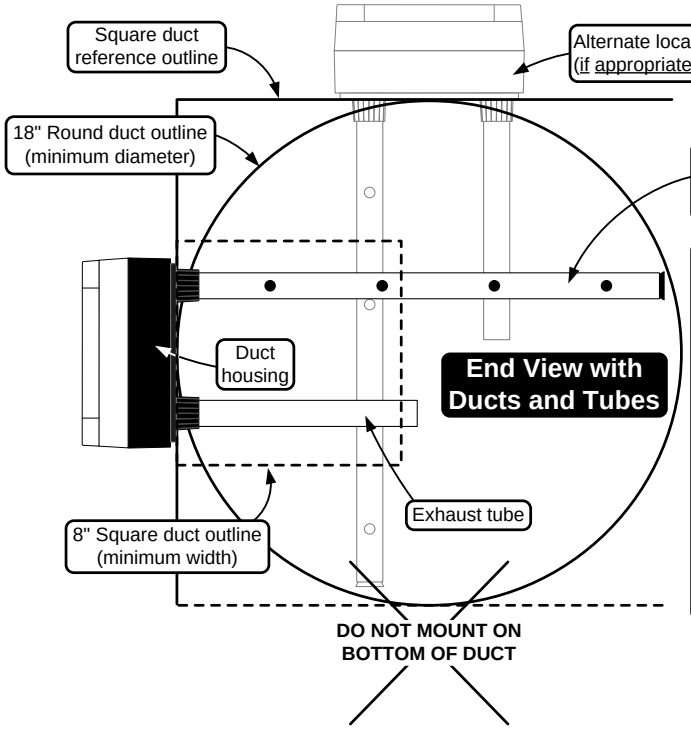

Sampling tube, keyed for proper hole alignment **with holes facing into airflow** (template is provided for proper tube installation). (Housing is shown as position 2 per note 2 below.)

General Location Notes:

1. Testing performed under the auspices of the Fire Detection Institute (FDI) recommended when sampling tubes are not located vertically, that they be positioned horizontally in the upper half of the duct to account for possible stratification.
2. Three duct side mounting options are available as shown below. Mount housing at 90° to airflow for all orientations. Arrows indicate allowed airflow directions.

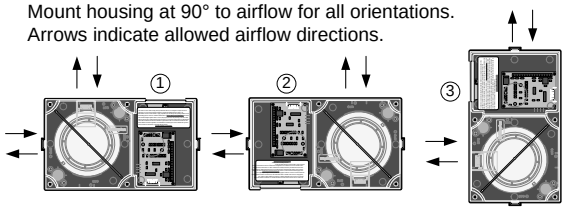

Duct Sensor Location Reference

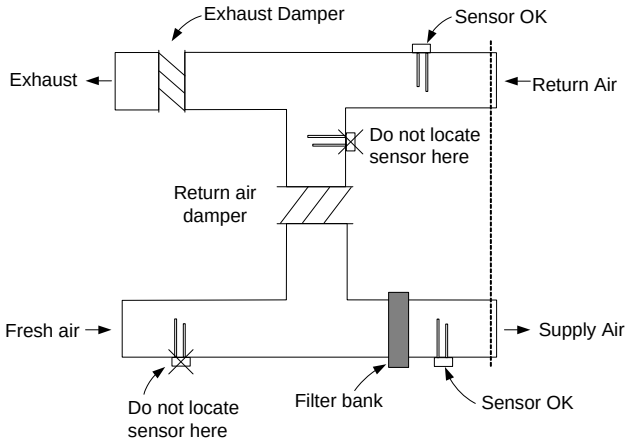

Additional Information. Refer to NFPA 90A, *Standard for the Installation of Air Conditioning and Ventilating Systems*; NFPA 72, the *National Fire Alarm and Signaling Code*; and the *NEMA Guide for Proper Use of Smoke Detectors in Duct Applications*, and Installation Instructions 574-776.

Duct Sensor Location Considerations:

1. Proper duct smoke detection location must ensure adequate airflow within the duct housing.
2. Duct air velocity rating is 300 to 4000 ft/min (91 to 1220 m/min). Pressure differential between intake and exhaust tubes is required to be between 0.015 to 1.55 inches of water (0.381 to 39.37 mm).
3. Ensure accessibility for test and service.
4. Proper Locations: downstream side of filters to detect fires in the filters; in return ducts, ahead of mixing areas; upstream of air humidifier and cooling coil.
5. Other locations and orientations may be required for proper duct smoke detection depending on duct access, system design, and duct airflow testing. Contact your local Simplex product supplier for assistance.

Locations to Avoid:

1. Where dampers closed for comfort control would interfere with airflow.
2. Next to outside air inlets (unless the intent is to monitor smoke entry from that area).
3. In return air damper branch ducts and mixing areas where airflow may be restricted.

Specifications

General Mechanical and Environmental	
Air Velocity Range (linear ft/min)	300 to 4000 ft/min (91 to 1220 m/min)
Sensor Sensitivity Range	0.2% to 3.7% per foot of obscuration, selectable at host control panel
UL Listed Temperature Range	32° F to 100° F (0° C to 38° C)
Operating Temperature Range	32° F to 122° F (0° C to 50° C)
Storage Temperature Range	0° F to 140° F (-18° C to 60° C)
Humidity Range	10% to 95% RH, non-condensing
Wiring Connections	Terminal blocks, 18 to 12 AWG (0.82 mm^2 to 3.31 mm^2)
Housing Color and Material	Black ABS base with clear polycarbonate cover
Sampling and Exhaust Tube Material	Black CPVC, custom extrusion; sampling tubes are pre-drilled
Remote Status/Alarm LED and Test Station with Remote Status/Alarm LED	
Remote Alarm LED Current	1.2 mA, no impact to 24 VDC alarm current (2098-9808 or 2098-9806)
Test Station Keyswitch Current	3.3 mA, no impact to 24 VDC alarm current (2098-9806)
Remote Alarm LED and Test Station Distance	250 ft (76 m) maximum
Addressable Operation	
Data Communications	IDNet or MAPNET II communications, auto-select, one address per housing; provides operating power to model 4098-9755
Model 4098-9756 with Supervised Multiple Relay Control, Requires Separate Fused 24 VDC from Fire Alarm Power Supply	
Input Voltage	18-32 VDC (24 VDC nominal)
Standby Current	3 mA @ 24 VDC
Alarm Current	15 mA @ 24 VDC; add 15 mA for each 4098-9843 relay
Supervised Remote Relay Control Output	For use with 4098-9843 relay only, quantity of 15 maximum; distance of 500 ft (152 m) maximum; requires 4081-9008 (ref. 733-894) 10 kΩ, 1/2 W end-of-line resistor
4098-9843 Relay Output Ratings, Single Form C, use with Model 4098-9756 Only	
Coil Current	15 mA @ 24 VDC, up to 15 maximum per relay control output
Relay Contacts	7 A at 0.35 PF @ 28 VDC & 120 VAC; 250 µA @ 5 VDC
Location Distance	500 ft (152 m) maximum to relay coils; locate relays within 3 ft (1 m) of device being controlled per NFPA 72

TYCO, SIMPLEX, and the product names listed in this material are marks and/or registered marks. Unauthorized use is strictly prohibited. NFPA 72 and National Fire Alarm and Signaling Code are registered trademarks of the National Fire Protection Association (NFPA).

© 2014 Tyco Fire Protection Products. All rights reserved. All specifications and other information shown were current as of document revision date and are subject to change without notice.

Features

For use as Class B end-of-line resistor:

- Connect these resistor harnesses where end-of-line resistors are required at remote locations to monitor wiring continuity
- Refer to specific circuit specifications for end-of-line resistor requirements

UL Listed to Standard 864

Product Selection

Table 1: Product Selection

SKU	Reference Number	Description
4081-9001	733-892	2.2 kΩ, 1/2 W, ± 5%
4081-9002	733-893	3.3 kΩ, 1 W, ± 5%
4081-9003	733-896	4.7 kΩ, 1/2 W, ± 5%
4081-9004	733-886	6.8 kΩ, 1/2 W, ± 5%
4081-9005	733-984	1.8 kΩ, 1/2 W, ± 5%
4081-9006	733-890	560 Ω, 1 W, ± 5%
4081-9007	733-891	1.2 kΩ, 1 W, ± 5%
4081-9008	733-894	10 kΩ, 1/2 W, ± 5%
4081-9009	733-912	20 Ω, 1 W, ± 5%
4081-9010	733-973	1 kΩ, 1 W, ± 5%
4081-9011	733-974	100 Ω, 1/2 W, ± 5%
4081-9012	733-985	22 kΩ, 1/2 W, ± 5%
4081-9013	734-086	4.99 kΩ, 1/2 W, ± 1%
4081-9014	734-092	2.4 kΩ, 1/2 W, ± 5%
4081-9015	734-093	1.5 kΩ, 1/2 W, ± 5%
4081-9016	734-149	150 kΩ, 1/2 W, ± 5%
4081-9017	734-171	3.9 kΩ, 1 W, ± 5%
4081-9018	734-168	10 kΩ, 1 W, ± 5%
4081-9026	A163819W6P	51.1K Ω ,1/2 W, ± 1%

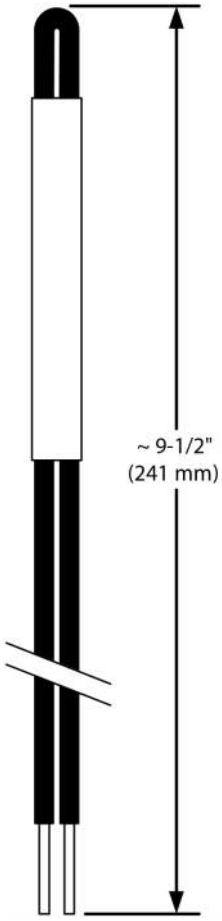

Figure 1: Typical 4081 Series Resistor Harness Assembly (full size except for lead length)

* This product was not approved by ULC, FM, MEA (NYC), or CSFM as of document revision date. Additional listings may be applicable, contact your local Simplex® supplier for the latest status.

RSN: 1844554
Permit: 2024-2476680-LT
Sheet 44 of 68

Specifications

Table 2: Specifications

Specification	Rating
Overall Length	Approximately 9-1/2" (241 mm)
Wire Length	7" (178 mm) ± 1" (25 mm)
Wire Size	18 AWG (0.82 mm2)
Insulation	600 V, black
Leads	Stripped 0.5" (13 mm); tinned
Resistor Attachment	Resistor leads are crimped to wires and covered with heat shrink tubing

© 2022 Johnson Controls. All rights reserved. All specifications and other information shown were current as of document revision and are subject to change without notice. Additional listings may be applicable, contact your local Simplex® product supplier for the latest status. Listings and approvals under Simplex Time Recorder Co. Simplex, and the product names listed in this material are marks or registered marks. Unauthorized use is strictly prohibited. NFPA 72 and National Fire Alarm Code are registered trademarks of the National Fire Protection Association (NFPA).

Simplex

*UL, ULC, CSFM Listed;FM Approved; MEA (NYC) Approved**

TrueAlert Addressable Notification Appliances

TrueAlert Addressable Isolator+ Module, Model 4905-9929

Features

Isolator+ modules provide short circuit isolation for TrueAlert addressable notification appliance wiring:**

- Power and communications are supplied by Simplex 4100ES, 4010ES, and 4007ES fire alarm control panels equipped with power supplies that provide advanced addressable notification from IDNAC Signaling Line Circuits (SLCs), and from 4009 IDNAC Repeaters**
- Operation is also compatible with legacy TrueAlert SLCs from TrueAlert Power Supplies (TPS) or TrueAlert Addressable Controllers (4009T)
- Dual port design accepts communications and power from either port and automatically isolates one port from the other when a short circuit occurs
- Mounts in standard 4" (102 mm) square electrical box, 2 ⅛" (54 mm) deep
- UL listed to Standard 864

Status diagnostics:

- On-board yellow LED provides module status, can indicate communications poll or be activated from panel
- Isolators report faults to the host control panel (method varies with system connection type)

Information received at the control panel allows identification of the short circuit location:

- Simplex control panels providing IDNAC SLCs will be advised of *individual* appliances disabled due to activated isolators; (also true of legacy panels with TPS or when connected to TrueAlert Addressable Controller using RUI communications)
- Other control panels controlling TrueAlert Addressable Controllers do not recognize appliance addresses but will receive a report of an open circuit channel trouble due to activated isolators

Class B (Style 4) IDNAC SLC wiring:

- Up to 12 Isolator+ modules can be connected per IDNAC SLC and up to 6 Isolator+ modules can be connected directly together in series on the same branch

Class A (Style 6) IDNAC SLC wiring:

- For Class A operation, up to 6 Isolator+ modules can be connected per SLC loop

General channel loading rules:

- Isolator+ modules require one address and are rated as 4 unit loads
- TrueAlert addressable notification appliances are a single unit load

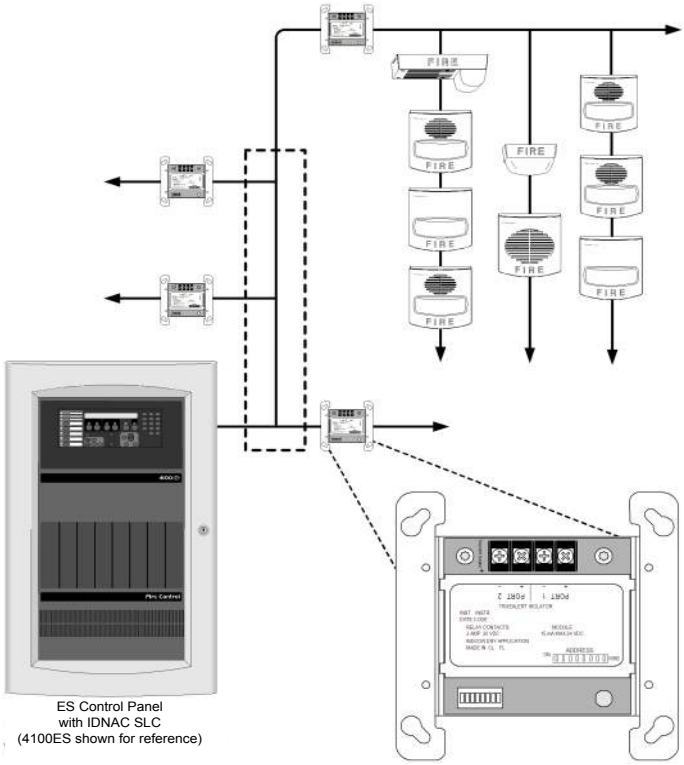

Figure 1: Typical TrueAlert Isolator+ Module Application One-Line Drawing Including Module Detail

Introduction

IDNAC Addressable Notification SLCs (and legacy TrueAlert SLCs) are internally isolated from each other. In the event of a channel wiring short circuit, the channel will safely shut down and then monitor the wiring for restoration to normal when the short is repaired. However, within the branch and "T" tap wiring of an IDNAC channel, the use of 4905-9929 TrueAlert Isolator+ Modules can provide additional isolation that can reduce the quantity of TrueAlert addressable appliances impacted by a short circuit.

Short Circuit Isolation. An internal isolation relay allows the Isolator + module to separate shorted and/or disabled wiring from functioning wiring to optimize the available appliances. Isolator+ module status is communicated to the control panel providing assistance in identifying the shorted wiring location.

Convenient Location. The 4905-9929 Isolator+ Module mounts in a standard 4" square, 2 ⅛" deep electrical box, allowing isolators to be conveniently located on the IDNAC SLC channel where the local wiring could most benefit.

** Use of "TrueAlert" in this document refers to both TrueAlert and TrueAlert ES notification appliances. Use of IDNAC SLCs also refers to operation of TrueAlert SLCs

*This product has been approved by the California State Fire Marshal (CSFM) pursuant to Section 13144.1 of the California Health and Safety Code. See CSFM Listing 7300-0026:214 for allowable values and/or conditions concerning material presented in this document. Accepted for use – City of New York Department of Buildings – MEA35- 93E. Additional listings may be applicable; contact your local Simplex product supplier for the latest status. Listings and approvals under Simplex Time Recorder Co. are the property of Tyco Safety Products Westminster.

RSN: 1844554
Permit: 2024-2476680-LT
Sheet 46 of 68

TrueAlert Isolator+ Example 1

Branch Protection. The diagram below illustrates the addition of 4905-9929 Isolator+ Modules to IDNAC SLC wiring located at the start of each branch. With Isolator+ modules added in these locations, there will be an increase in overall system operation in the event of a short circuit.

Branch Short Circuits. Without Isolator+ modules, if a short circuit occurred on a branch connection, the entire channel would be inoperative, the same as occurs with conventional Notification Appliance Circuit (NAC) operation. With the addition of Isolator+ modules, short circuits would only disable those appliances connected electrically beyond the Isolator+ module. Since short circuits are sometimes encountered during initial wiring installations, the use of Isolator+ modules can also assist in finding those wiring faults, allowing a decrease in the total installation and checkout time.

Address Allocation. For the example shown below, there are 18 notification appliances which would occupy a total of 18 addresses at the 4100ES control panel. There are also 4 Isolator+ modules, each requiring an address. The total addresses count on this IDNAC SLC would be 18 + 4 = 22 addresses.

SLC Loading. Isolator+ modules are powered from the IDNAC SLC and they require an additional loading factor with each Isolator+ designated as four unit loads. Each TrueAlert addressable appliance, whether strobe, horn, or combination unit, is only one address and only one unit load. The total unit loads for this example is 18 appliances + 4 Isolator+ modules (4 unit loads each) = 18 + 16 = 34 unit loads.

Channel Capacity. Capacity may vary with IDNAC SLC control, but typically is up to 127 addresses and up to 139 unit loads. This example is not fully loaded and could probably accommodate additional appliances. However, the appliance currents also need to be considered. (IDNAC SLCs and legacy TPS SLCs are rated 3 A full load. TrueAlert Addressable Controller channels are rated 2.5 A full load.)

TrueAlert Isolator+ Example 1, One-Line Diagram Showing Individual Branch Protection

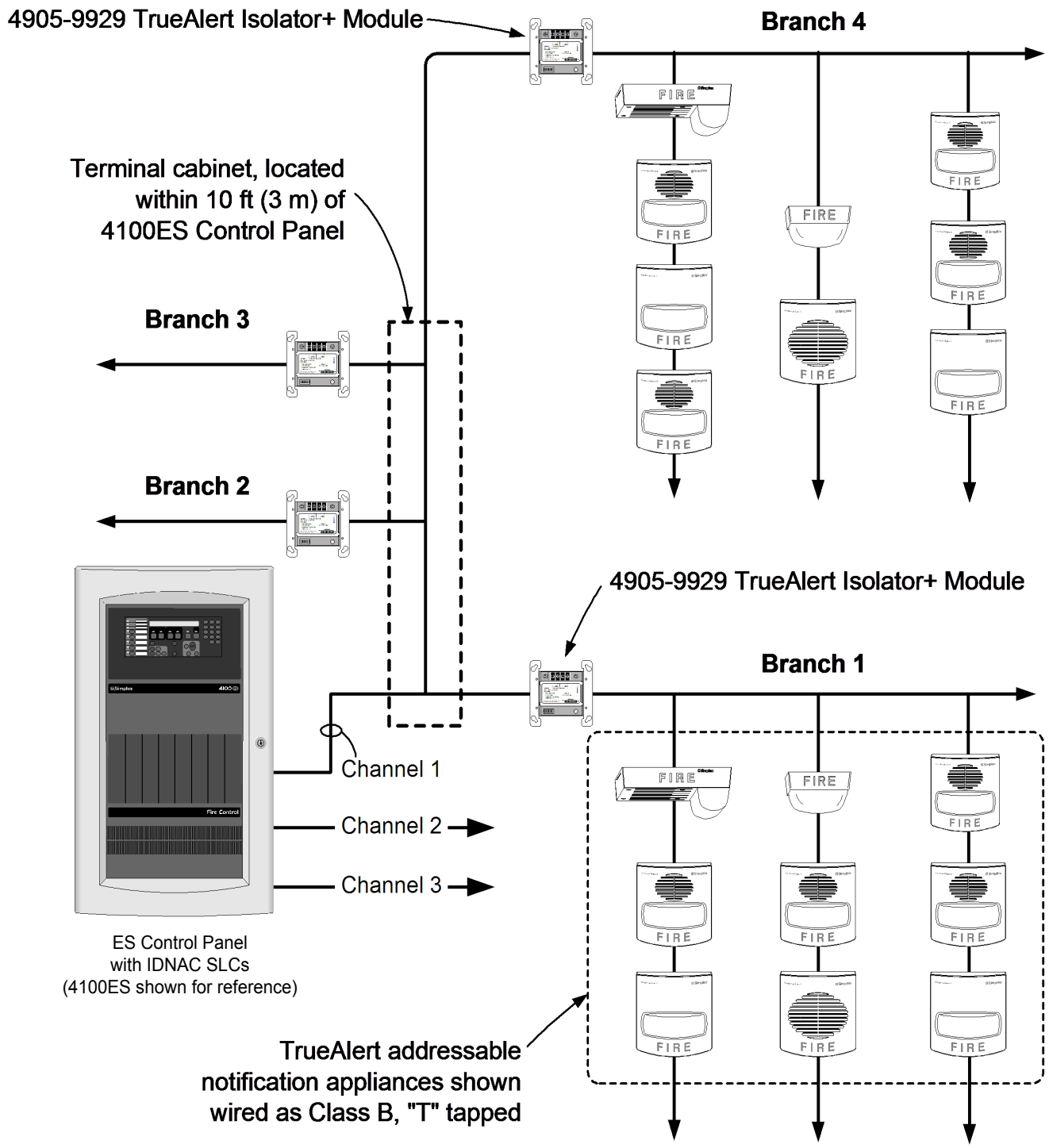

RSN: 1844554
Permit: 2024-2476680-LT
Sheet 48 of 68

TrueAlert Isolator+ Example 2

"T" Tap Level Isolation. The one-line diagram directly below shows Isolator+ modules located at the start of each "T" tap on a single branch of a single IDNAC SLC, all wired Class B (Style 4). With this approach, each tap is isolated from short circuits that may occur out on the other taps.

Channel Loading. Total addresses: 15. Total unit loads: 11 appliances + 4 Isolator+ modules (4 unit loads each) = 11 + 16 = 27 unit loads.

TrueAlert Isolator+ Example 3

Class A Wiring Isolation. Example 3 (at the bottom of this page) illustrates an "optimized" Class A (Style 6) IDNAC SLC with each notification appliance connected between an Isolator+ module. With this connection, a single short circuit between Isolator+ modules would only disable one TrueAlert notification appliance. (Please note that Isolator+ modules can be applied as desired, the configuration shown is to illustrate operation and is not required.)

Channel Loading. Total addresses = 11. Total unit loads = 5 appliances + 6 Isolator+ modules (4 units loads each) = 5 + 24 = 29 unit loads.

TrueAlert Isolator+ Example 2, One-Line Diagram Showing Individual "T" Tap Protection

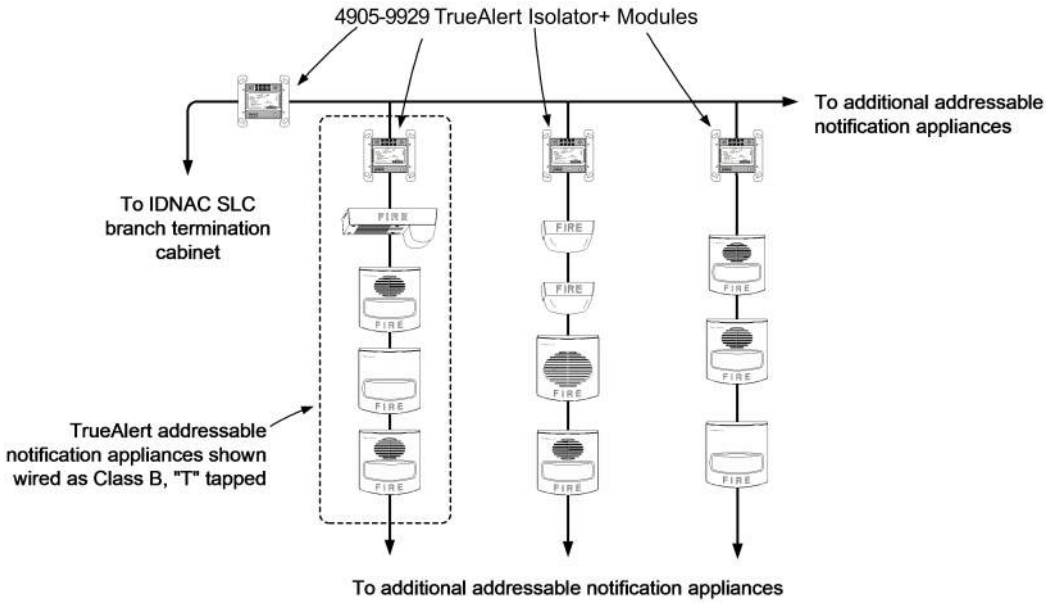

TrueAlert Isolator+ Example 3, One-Line Diagram Showing Class A/Style 6 with Isolators

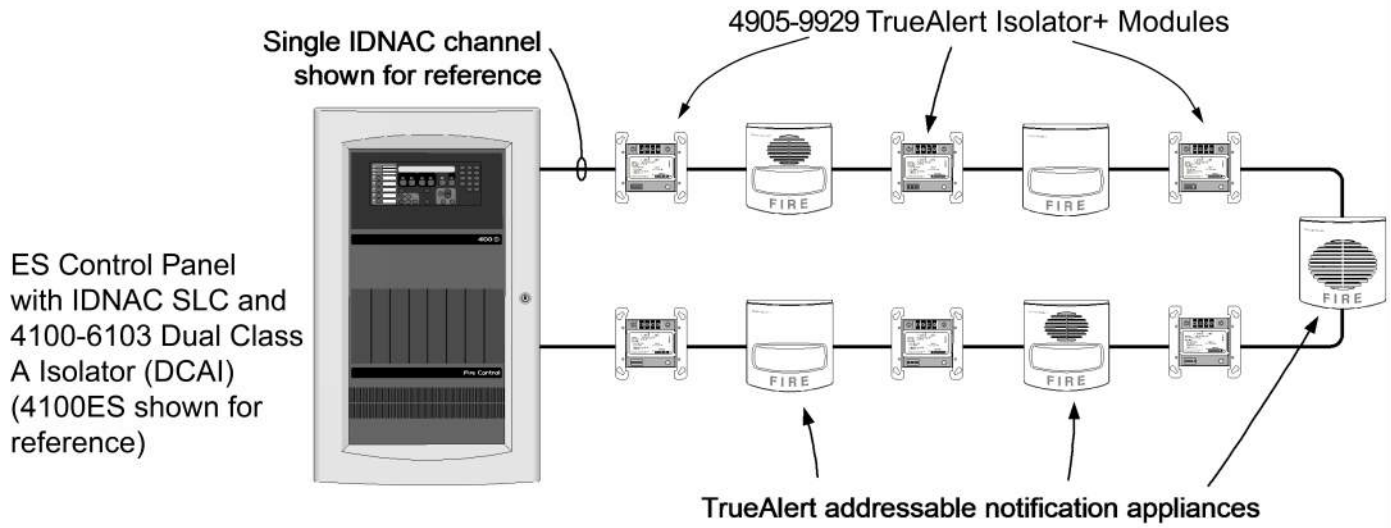

TrueAlert Isolator+ Mounting Information

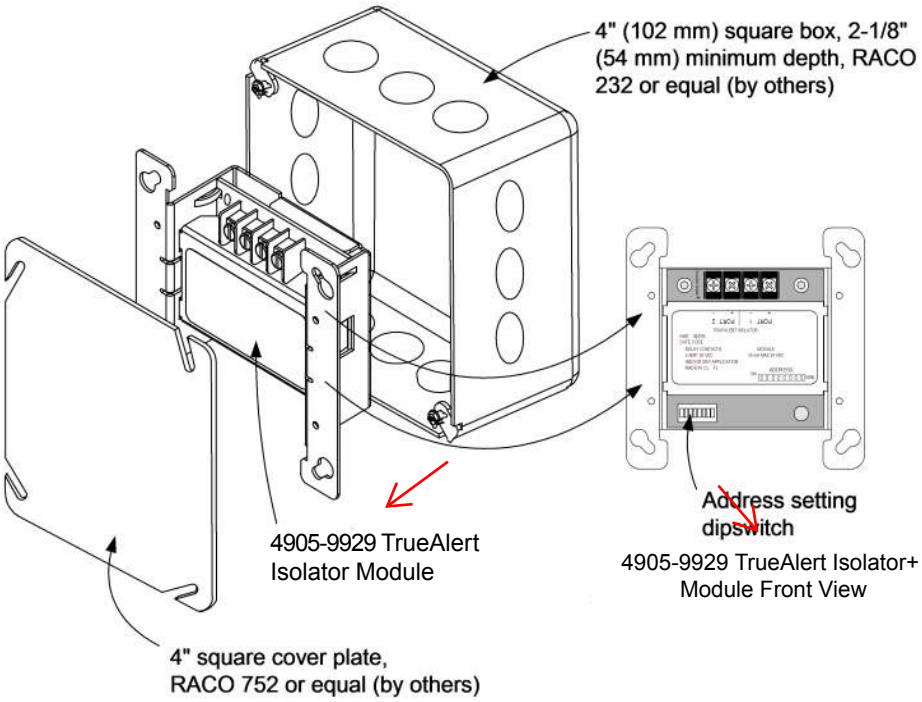

RSN: 1844554
Permit: 2024-2476680-LT
Sheet 50 of 68

Specifications

Table 1: Electrical

Isolated Circuit Wire Resistance	1.5 Ω maximum, measured from any Isolator+ port to the farthest appliance in the protected segment
Voltage Range	18 to 32 VDC, provided from TrueAlert channel
Current, Isolated Mode	10 mA @ 24 VDC
Address Requirements	1 Address per Isolator+ Module
Unit Load Requirements	4 Unit loads per Isolator+ Module (1 unit load = 0.8 mA control panel current)

Table 2: IDNAC SLC Loading

Class B	Up to 12 Isolator+ modules total with up to 6 being connected directly together in series on the same branch
Class A	Up to 6 Isolator+ modules total on the loop

Table 3: Mechanical

Dimensions	4 ⅛" H x 4 ⅛" W x 1 ⅜" D (105 mm x 105 mm x 35 mm)
Housing Material	Black thermoplastic
Mounting Plate Material	Sheet metal, galvanized
Temperature Range	32° to 120° F (0° to 49° C) intended for indoor operation
Humidity Range	Up to 93% RH at 100° F (38° C)
Wiring Connections	Screw terminals for 18 to 12 AWG (0.82 mm^2 to 3.31 mm^2)

Table 4: Reference

Installation Instructions		574-769
Panel Data Sheets	**4007ES with IDNAC SLCs**	*S4007-0002*
	4009 IDNAC Repeater	*S4009-0004*
	4010ES with ESS	*S4010-0011*
	4100ES with EPS	*S4100-0100*
	4100ES with ES-PS	*S4100-1031*

© 2019 Johnson Controls. All rights reserved. All specifications and other information shown were current as of document revision and are subject to change without notice. Additional listings may be applicable, contact your local Simplex® product supplier for the latest status. Listings and approvals under Simplex Time Recorder Co. Simplex, and the product names listed in this material are marks and/or registered marks. Unauthorized use is strictly prohibited. NFPA 72 and National Fire Alarm Code are registered trademarks of the National Fire Protection Association (NFPA).

Simplex

TrueAlert ES Addressable Notification Appliances

*UL, ULC, CSFM Listed**
*FM Approved**

Audible/Visible Notification Appliances;
Multi-Tone Horn/Strobe with 520 Hz Output

Features

Individually addressed and controlled multi-tone and multi-candela TrueAlert ES A/V (audible/visible) notification appliances provide:

- Multi-candela xenon strobe with synchronized 1 Hz flash rate and with intensity ***programmable from the control panel*** or jumper selected as 15, 30, 75, 110, 135, or 185 cd
- Advanced addressable notification controlled by ***IDNAC SLCs*** providing ***regulated 29 VDC*** allowing strobes to operate with lower current even under battery backup
- Wiring supervision to each appliance allowing "T-tapped" connections for Class B circuits to simplify wiring (Class A circuits require in/out wiring)
- ***Self-Test Mode*** allows on-board sensors to detect the strobe and horn output and then report their status to the control panel
- Per appliance tone selection of: 520 Hz Horn, Broadband Horn, Bell, Chime, High/Low, Slow Whoop, or Siren; *programmable from the control panel*, or selected using an on-board DIP Switch (refer to sound output details on page 4)
- 520 Hz tone is compliant with NFPA 72 Low Frequency Signal Requirements for Sleeping Areas
- Horn, Bell, and High/Low tones can be controlled as: Temporal Code 3, Temporal Code 4, March Time (selectable as 20, 60, or 120 bpm), or Continuous
- Slow Whoop, Siren, and Chime tone selections are controlled as synchronized continuous operation
- Output of "high" or "low" (~6 dBA difference) selectable at the appliance or from the controller with FACP mode selected at the appliance
- ***TrueAlert Device Reports*** at the control panel detailing appliance point ID, custom label, type, and candela setting (see sample on page 3)
- ***Magnet Test diagnostics*** to assist checkout and testing of appliances and wiring
- ***Electrical test point access*** without removing cover
- Compatibility with ADA requirements; (refer to important installation information on page 3)
- Strobe operation is listed to UL Standard 1971 and ULC Standard S526; Horn operation is listed to UL Standard 464 and ULC Standard S525

LED Indicator and Magnet Test feature:

- Appliance LED can be selected to display each polling cycle to indicate appliance supervision
- When the controller is in diagnostic mode, the Magnet Test pulses the LED to indicate appliance address and can be set to also briefly flash the strobe and sound the horn

TrueAlert ES Multi-Tone Addressable A/Vs are Available in Red with White Lettering and White with Red Lettering

Features *(Continued)*

Mechanical design features include:

- Rugged, high impact, flame retardant thermoplastic housing in red with white letters or white with red letters, with clear lens, available with FIRE, FEU, ALERT, FEU/FIRE, or blank lettering
- Separate covers are available to change application type on-site or for replacement; covers can be easily removed without disturbing the connected housing and avoiding trouble conditions
- A separate mounting plate allows wiring to be completed before appliance is mounted; use with single gang, double gang, or 4-inch square box, flush or surface mount
- In/out wiring terminals for 18 AWG to 12 AWG
- Optional mounting adapters are available to cover surface mounted electrical boxes and to adapt to Simplex 2975-9145 boxes

Description

TrueAlert ES addressable multi-tone A/Vs are individually addressed audible/visible notification appliances that receive power, supervision, and control signals from a Simplex fire alarm control panel providing **IDNAC** Signaling Line Circuits (SLCs). (See compatibility list on page 4.)

Strobe Application Reference

Proper selection of visible notification is dependent on occupancy, location, local codes, and proper applications of: the *National Fire Alarm Code* (NFPA 72), ANSI A117.1; the appropriate model building code: BOCA, ICBO, or SBCCI; and the application guidelines of the Americans with Disabilities Act (ADA).

* This product has been approved by the California State Fire Marshal (CSFM) pursuant to Section 13144.1 of the California Health and Safety Code. See CSFM Listing 7135-0026:0380 for allowable values and/or conditions concerning material presented in this document. Additional listings may be applicable; contact your local Simplex product supplier for the latest status. Listings and approvals under Simplex Time Recorder Co. are the property of Tyco Fire Protection Products.

TrueAlert ES Operation Advantage

TrueAlert ES addressable appliances on IDNAC SLCs provide separate visible and audible notification using a single two-wire circuit that also *confirms connection to the individual notification appliance's electronic circuit*. This operation increases circuit supervision integrity by providing supervision that extends beyond the appliance wiring connections.

Reduced current allows efficient IDNAC SLC operation. With ***IDNAC SLCs***, a ***constant*** 29 VDC source voltage is maintained, even during battery standby, allowing strobes to operate at higher voltage with lower current and ensuring a consistent current draw and voltage drop margin under both primary power and secondary battery standby. Efficiencies include wiring distances up to 2 to 3 times farther than with conventional notification, or support for more appliances per IDNAC SLC, or use of smaller gauge wiring, or combinations of these benefits, all providing installation and maintenance savings with high assurance that appliances that operate during normal system testing will operate during worst case alarm conditions.

Reducing Installation and Testing Time. With separate controls on the same two-wire SLC, installation time and expense for both retrofit and new construction can be significantly reduced. When Class B wiring is used, *wiring can be "T" tapped*, allowing more savings in distance, wire, conduit (size and utilization), and overall installation efficiency. Use of Self-Test and Magnet Test features improve installation efficiency. TrueAlert device reports conveniently identify information about each connected appliance.

TrueAlert ES Diagnostics

Test Features. When IDNAC SLCs are in diagnostic mode, *Self-Test* and *Magnet Test* features provide individual appliance testing. With the *Self-Test* feature, *appliance operation can be confirmed without leaving the control panel*. Additionally, each appliance's LED can be selected to pulse when it receives a supervision poll during normal operation.

***Self-Test* Details.** Selecting Self-Test Mode from the control panel allows on-board sensors, depending on the device type, to detect its own strobe and/or horn output and then report their status to the control panel. Operation is by selected VNAC appliance groups and is either automatic (all briefly simultaneously activated) or individually activated by applying a magnet. (Refer to control panel data sheet for more Self-Test information, see list on page 4.)

Silent Appliance Magnet Test. In this test mode, in response to application of a magnet, the appliance LED pulses sequentially to conveniently indicate the appliance's address.

Operational Appliance Magnet Test. In this test mode, after the address is indicated by pulsing the appliance LED, the strobe will briefly flash and the horn will briefly sound to indicate proper operation.

TrueStart Instrument Two (TSIT). The 2nd generation of the Simplex TrueStart Test Instrument adds testing of IDNAC SLC wiring and TrueAlert ES appliances to its ability to test IDCs, NACs, and IDNet communications *before connection to the control panel*. Please contact your local Simplex representative for additional information.

TrueAlert Addressable Wiring Isolator

Isolator Model 4905-9929 is available for remote mounting on TrueAlert addressable circuits to isolate short circuited wiring from functioning wiring. (See data sheet S4905-0001.)

Product Selection

TrueAlert ES Wall Mount Multi-Tone Addressable Audible/Visible Appliances

TrueAlert ES multi-tone addressable A/V appliances include cover and matching mounting plate except as noted;
Dimensions with Cover = 5 ⅛" H x 5" W x 2 ⅝" D (130 mm x 127 mm x 67 mm)

Model*	Cover Color	Wording	Lens Color	Model*	Cover Color	Wording	Lens Color
49MTV-WRF(-BA)	Red	FIRE	Clear	49MTV-WRS-BA	Red	Blank	Clear
49MTV-WWF(-BA)	White			49MTV-WWS-BA	White		
49MTV-APPLW(-BA)	Select cover and mounting plate separately						

Separate Mounting Plate (Required when ordering model 49MTV-APPLW(-BA))

Model*	Color	Model	Color	Note
49MP-AVVOWR	Red	49MP-AVVOWW	White	Mounting Plate, select color to match cover

*** Note:** (-BA) indicates model is available either with or without the -BA suffix. Model numbers ending in -BA, APPLW models, and separate mounting plates are assembled in the USA.

Separate Covers (Required when ordering model 49MTV-APPLW(-BA), uses same covers as 49AV Series fixed tone A/Vs)

Model	Color	Wording	Model	Color	Wording
49AVC-WRFIRE	Red	FIRE	49AVC-WRFEU	Red	FEU
49AVC-WWFIRE	White		49AVC-WWFEU	White	
49AVC-WRALT	Red	ALERT	49AVC-WRBLNG	Red	FEU/FIRE
49AVC-WWALT	White		49AVC-WWBLNG	White	
49AVC-WRS	Red	Logos Only	49AVC-WWS	White	Logos Only

Mounting Adapters

Model	Color	Description	Dimensions
4905-9937	Red	Surface Mount Adapter Skirt	5 ⅜" H x 5 ¼" W x 1 ⅝" D (136 mm x 133 mm x 41 mm) Total depth with strobe = 4 ⅜" (111 mm)
4905-9940	White		
4905-9931	Red Adapter Plate for mounting to Simplex 2975-9145 Box (typically for retrofit, mount vertical or horizontal)		8 $\frac{5}{16}$" x 5 ¾" x 0.060" Thick (211 mm x 146 mm x 1.5 mm)
2975-9145	Red Mounting Box, requires 4905-9931 Adapter Plate		7 ⅞" x 5 ⅛" x 2 ¾" D (200 mm x 130 mm x 70 mm)

TrueAlert Device Reports Reference

Service Port — Page 1
REPORT 5 : TrueAlert Device Report — 12:34:56am TUE 10-Mar-15

POINT ID	CUSTOM LABEL	DEVICE TYPE	CANDELA
T14-1-1	Location Label . . . up to 40 characters	MT AV	15
T14-1-2	Break Room 5	MT AV	110
T14-1-3	Boiler Room	VO	75
T14-1-4	Elec. Room 7	AV	135

Installation Reference

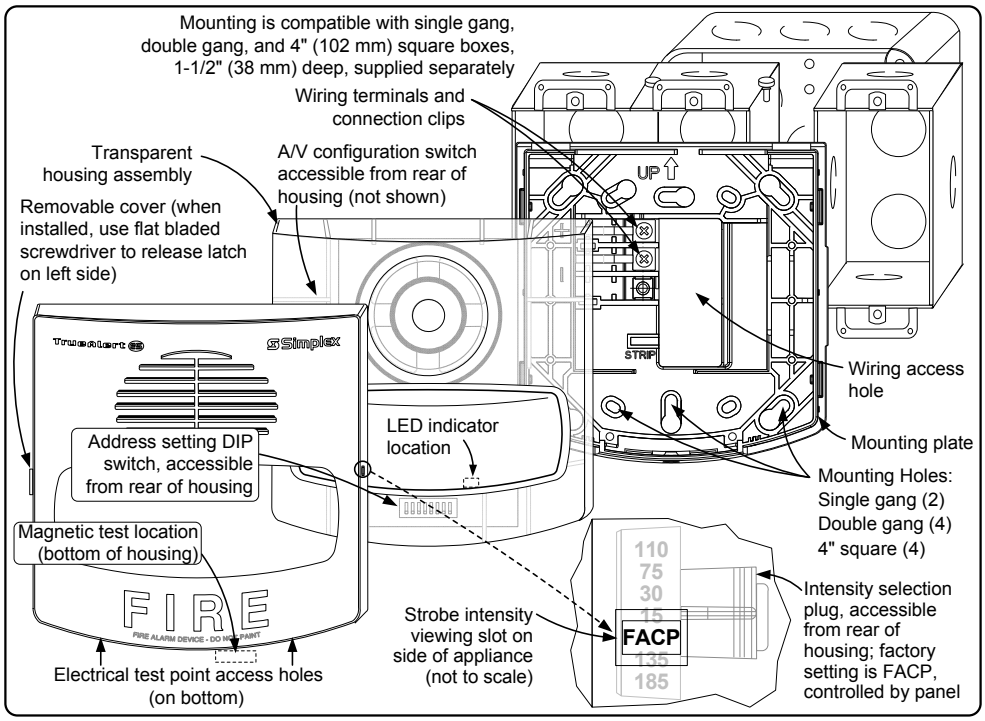

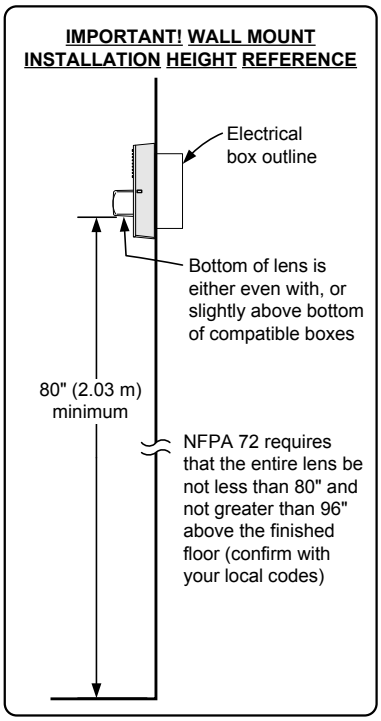

Adapter Plate and Surface Mount Installation Reference

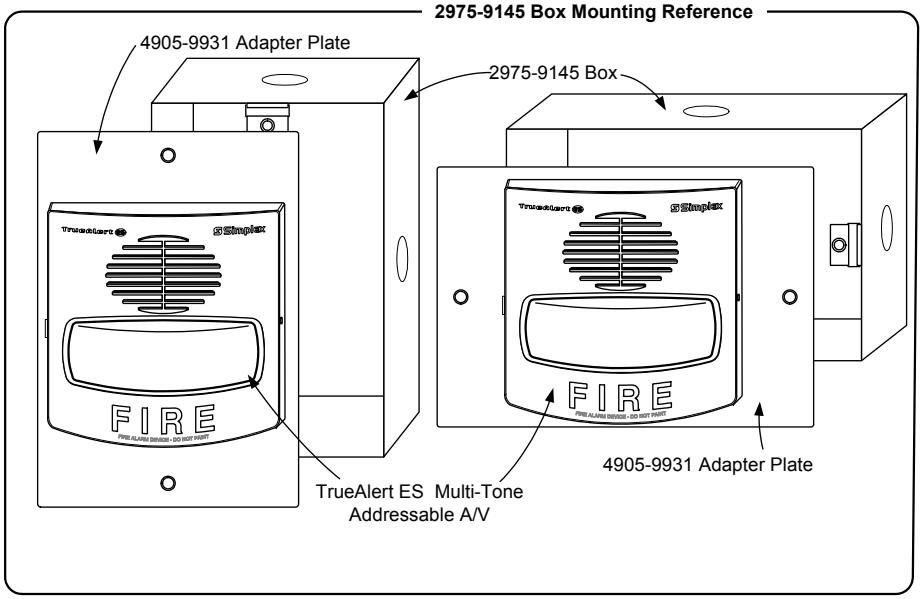

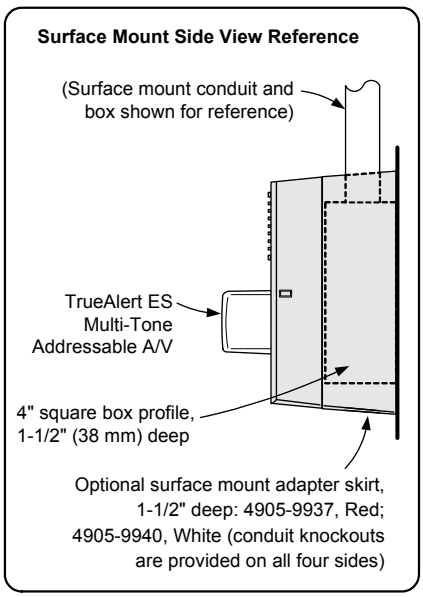

IDNAC SLC Controller Compatibility Reference

Compatible Controllers	Data Sheet Reference	Controller Output	IDNAC SLC Output Voltage	Appliance Voltage Design Reference
4100ES with EPS+ or EPS Power Supply	S4100-0100	IDNAC SLC	29 VDC (regulated)	23 VDC (with 6 VDC drop)
4009 IDNAC Repeater	S4009-0004			
4007ES with IDNAC Notification	S4007-0002			
4010ES with ESS Enhanced System Supply	S4010-0011			

TrueAlert ES A/V Specifications

Electrical Ratings	Typical Operating Voltage Range	23 VDC to 29.5 VDC, Special Application
	Supervisory Requirements	2 unit loads (1 unit load = 0.8 mA control panel current)
	49MTV Series SLC Loading	Up to 21 appliances can connect directly to the panel IDNAC SLC or to a 4009 IDNAC Repeater output, to a maximum of 127 addresses and 139 unit loads per SLC
IDNAC SLC Wiring Specifications (refer to control panel or power supply installation instructions for more information)		UTP, unshielded twisted pair recommended
		Maximum wire length allowed with "T-Taps" for Class B wiring per SLC = 10,000 ft (3048 m)
		Maximum wire length to any appliance = 4000 ft (1219 m)

Tone Characteristics

520 Hz Horn	520 Hz tone	These tones are compatible with control panel IDNAC commands for operation as Temporal Code 3, Temporal Code 4, March Time at 20, 60, or 120 bpm, or Continuous operation
Broadband Horn	Combination 600/3000 Hz signal	
Bell	Synthesized Bell tone	
High/Low	Alternating modulated tones with fundamentals of 1000 Hz and 800 Hz, 250 ms duration each	
Slow Whoop	Modulated 520 Hz to 1200 Hz sweep with 2 s duration	These tones operate as Continuous with synchronization
Siren	Modulated 600 Hz to 1200 Hz to 600 Hz sweep, with 2 s duration	
Chime	Multi-phase signal with a peak and decay time of 1 s	

TrueAlert ES Multi-Tone Horn/Strobe Current Ratings

	RMS Current Ratings @ 23 VDC, in mA											
	15 cd		30 cd		75 cd		110 cd		135 cd		185 cd	
Tone	**High**	**Low**	**High**	**Low**	**High**	**Low**	**High**	**Low**	**High**	**Low**	**High**	**Low**
520 Hz Horn and High/Low	145	108	163	125	198	158	230	195	262	214	299	257
Broadband Horn, Bell, Chime, Slow Whoop, and Siren	135	99	152	111	185	139	212	172	247	203	284	243

TrueAlert ES Multi-Tone Horn/Strobe Horn Output

		UL 464 Output Ratings @ 23 VDC and 29.5 VDC (dBA)*								ULC S525 Output Ratings @ 23 VDC and 29.5 VDC (dBA)*							
		Steady High		Steady Low		Coded High		Coded Low		Steady High		Steady Low		Coded High		Coded Low	
Tone	**Voltage**	**23**	**29.5**	**23**	**29.5**	**23**	**29.5**	**23**	**29.5**	**23**	**29.5**	**23**	**29.5**	**23**	**29.5**	**23**	**29.5**
520 Hz Horn		80	80	74**	75	76	76	70**	71**	83†		79†		83†		78†	
High/Low		81	82	77	77	75	76	70**	71**	87		82†		86†		82†	
Broadband Horn		84	84	79	79	81	81	74**	75	88		84†		87†		83†	
Bell		80	80	75	75	76	76	71**	71**	85		80†		85†		80†	
Slow Whoop		79	80	74**	75	these tones are not used for coded operation				85		80†		these tones are not used for coded operation			
Siren		79	80	74**	75					85		80†					
Chime**		67**	67**	62**	62**					82†		77†					

* Output ratings are at 10 ft (3 m); UL 464 ratings are per UL Reverberant Chamber testing; ULC S525 ratings are per ULC Anechoic Chamber testing. The tone generator circuit is DC-DC converter powered and provides essentially constant output over the rated voltage range.

** UL output ratings below 75 dBA are for NFPA 72 Private Mode applications.

† ULC output ratings below 85 dBA are for use in applications per applicable local codes.

Sound Output Dispersion per ULC S541 Anechoic Testing	Horizontal	-3 dBA @ ±37°	-6 dBA @ ±40°	-9.4 dBA @ ±90°
	Vertical	-3 dBA @ -24°, +42°	-6 dBA @ -59°, +50°	-8.6 dBA @ ±90°

General Specifications

Temperature Range	32° to 122° F (0° to 50° C)
Humidity Range	10% to 93%, non-condensing @ 104° F (40° C)
Connections	Terminal blocks on mounting plate for 18 AWG to 12 AWG (0.82 mm^2 to 3.31 mm^2); two wires per terminal for in/out wiring
Installation Instructions	579-1156 for 49MTV Series A/V appliances
	579-1100 for 49MP Series mounting plates

TYCO, SIMPLEX, and the product names listed in this material are marks and/or registered marks. Unauthorized use is strictly prohibited. NFPA 72 and National Fire Alarm Code are trademarks of the National Fire Protection Association (NFPA).

© 2016 Tyco Fire Protection Products. All rights reserved. All specifications and other information shown were current as of document revision date and are subject to change without notice.

Simplex

*UL, ULC, CSFM Listed; FM Approved**

TrueAlert ES Addressable Notification Appliances

Visual Only Notification Appliances, Indoor Ceiling Mount Strobe, Model Series 49VO

Description

Ceiling mount addressable visible only (V/O) notification appliances

are individually powered, addressed, and controlled from a Simplex fire alarm control unit (FACU) IDNAC Signaling Line Circuit (SLC). V/O notification appliances use a multi-candela strobe with synchronized 1 Hz flash rate and selectable candela rating. Xenon tube strobes devices are interoperable on the same IDNAC channel. Separate appliance and cover selection simplifies the ordering and installation process.

Figure 1: Indoor ceiling mount strobe

Features

Individually addressed visible only (V/O) notification appliances

General features:

- Multi-candela Xenon strobe available in low: 15 cd, 30 cd, 75 cd, and 110 cd; and high: 110 cd , 135 cd, and 185 cd range candela models
- Small compact design and low current draw due to energy efficient Xenon tube strobes, with LED indicators
- Advanced addressable notification controlled by IDNAC SLCs.
- IDNAC SLCs provide regulated 29 VDC for options to operate horns with lower current
- Removable cover for access to electrical test point
- Strobe intensity programming from the FACU or the device
- Wiring supervision to each appliance with T-tapped connections for Class B circuits simplifies wiring. Class A circuits require in/out wiring
- Self-Test Mode with onboard sensors to detect the strobe output and then report their status to the FACU
- TrueAlert Device Reports at the FACU detail appliance point ID, custom label, type, and candela setting
- Magnet test diagnostics for checkout and testing of appliances and wiring
- Compatibile with ADA requirements
- Strobe operation is listed to UL Standard 1971 and ULC Standard S526
- Synchronized strobe operation on the IDNAC channel

LED indicator and magnet test feature:

- LED indicates successful magnet test, 3-digit IDNAC address, and candela rating
- Option for LED to blink every polling cycle to indicate appliance supervision
- When the controller is in diagnostic mode, the magnet test blinks the LED to indicate appliance address and can be set to flash the strobe LEDs

Mechanical design features

- Rugged, high-impact, flame retardant thermoplastic housing in red and white colors
- Various covers and lettering options available
- Covers can be removed without disturbing the connected housing or causing trouble conditions
- In/out wiring terminals for 18 AWG to 12 AWG
- Mounts on 4 in. square or single gang USA electrical boxes.

  Note: Adapter plate required for mounting on single gang electrical boxes

- Optional wire guards

Strobe application reference

Proper selection of visible notification is dependent on occupancy, location, local codes, and proper applications of: the National Fire Alarm and Signaling Code (NFPA 72), ANSI A117.1; the appropriate model building code: BOCA, ICBO, or SBCCI; and the application guidelines of the Americans with Disabilities Act (ADA).

TrueAlert addressable wiring isolator

Isolator model 4905-9929

Isolator model 4905-9929 is available for remote mounting on TrueAlert addressable circuits to isolate short circuited wiring from functioning wiring. Refer to data sheet *TrueAlert Addressable Isolator+ Module, Model 4905-9929 S4905-0001* for additional information.

TrueAlert ES diagnostics

Test features

Controllers can be selected to pulse each appliance's LED when it receives a supervision poll. When the controller is in diagnostic mode, the appliance magnet test feature provides a response at the individual test appliance.

Silent appliance magnet test

The appliance LED pulses to indicate the appliance's address when performing a magnet test.

Operational appliance magnet test

In this test mode the appliance LED indicates the address, then the strobe will briefly flash to indicate proper operation.

TrueStart instrument two (TSIT)

The 2nd generation of the Simplex TrueStart Test Instrument adds testing of IDNAC SLC wiring and TrueAlert ES appliances to its ability to test IDCs, NACs, and IDNet communications before connection to the FACU. Contact your local Simplex representative for additional information.

* Additional listings may be applicable; contact your local Simplex product supplier for the latest status. Listings and approvals under Simplex Time Recorder Co.

RSN: 1844554
Permit: 2024-2476680-LT
Sheet 56 of 68

Installation reference

Figure 2: Indoor Ceiling Mount Strobe installation

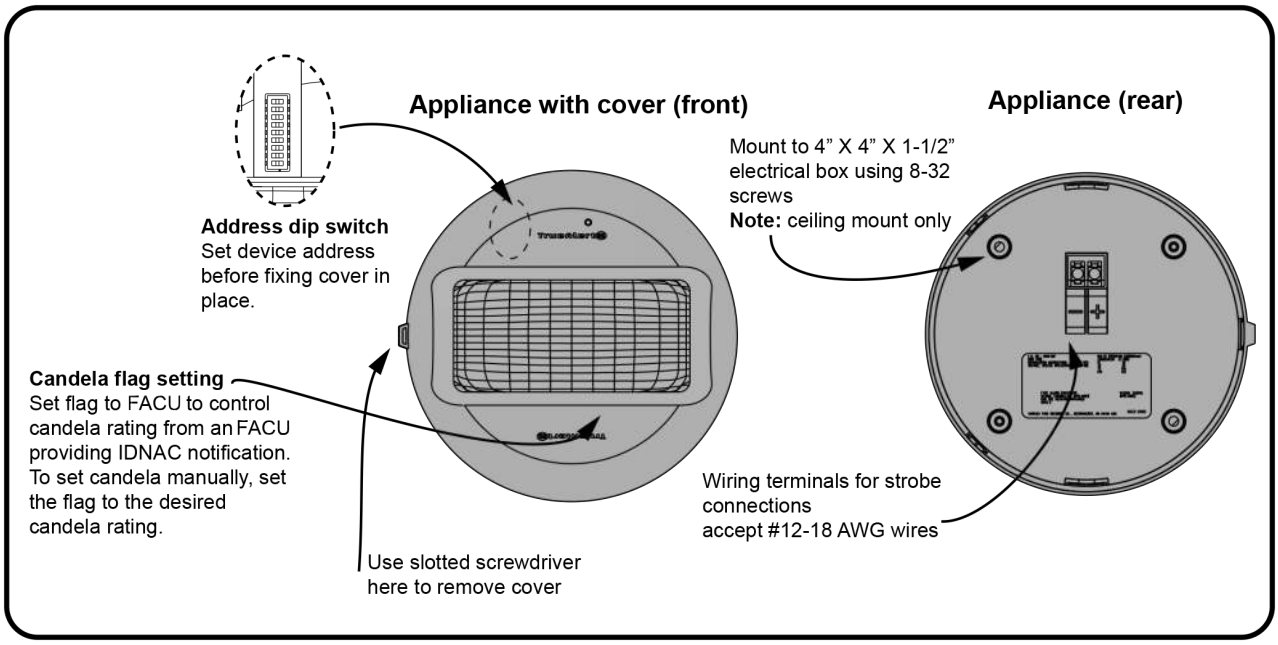

IDNAC SLC operation advantage

TrueAlert Addressable visible appliances on IDNAC SLCs

TrueAlert Addressable visible appliances on IDNAC SLCs provide visible notification with a two-wire circuit. The circuit also confirms connection to the individual notification appliance's electronic circuit. This increases circuit supervision integrity by providing supervision that extends beyond the appliance wiring connections.

Reduced current usage on IDNAC SLCs

The system maintains a constant 29 VDC source voltage, even during battery standby. Appliances can operate at higher voltage with lower current. This ensures a consistent current draw and voltage drop margin under both primary power and secondary battery standby. This gives the option for wiring distances up to 3 times farther than with conventional notification, support for more appliances for each IDNAC SLC, and options to use smaller gauge wiring.

Reducing Installation and Testing Time

Separate controls on the same two-wire SLC reduces installation time and expense for both retrofit and new construction. When Class B wiring is used, wiring can be T-tapped for more optimisation of distance, wire, conduit size and utilization, and installation. Use of the magnet test feature improves installation efficiency. TrueAlert device reports identify information about each connected appliance.

Product selection

Table 1: Ceiling mount addressable visual only V/O appliances

Model*	Lens color	Description	Installation Instructions
49VO-APPLC 49VO-APPLC-BA	Clear	V/O appliance only. Select cover separately.	579-1227
49VOH-APPLC 49VOH-APPLC-BA			
49VOH-APPLCA-BA	Amber		
49VOH-APPLCB-BA	Blue		
49VOH-APPLCG	Green		579-1280
49VOH-APPLCR	Red		

Table 2: Surface/WP back boxes

Model	Color	Description	Installation instructions
49WPBB-VOCR	Red	Surface/WP back box in red	579-1270
49WPBB-VOCW	White	Surface/WP back box in white	

Note: Use WP back boxes for surface mounting only. Using weatherproof back boxes does not make an appliance weatherproof.

RSN: 1844554
Permit: 2024-2476680-LT
Sheet 57 of 68

Table 3: Adapter plates

Model	Description	Installation Instructions
49VO-APCS	V/O Ceiling Mount Adapter Plate. Required for mounting on a single gang electrical box.	579-1227

Table 4: V/O covers (required when ordering APPLC models)

Model*	Color	Wording
49VOC-CRFBL	Red	FUEGO/FOGO
49VOC-CRALT	Red	ALERT
49VOC-CRBF		FEU/FIRE
49VOC-CRFEU		FEU
49VOC-CRF		FIRE
49VOC-CRS		Simplex logo only
49VOC-CRBCF	Red	إنذار/ALERT 火警/FIRE حريق/FIRE
49VOC-CK	Black	Blank
49VOC-CWALT	White	ALERT
49VOC-CWBF		FEU/FIRE
49VOC-CWFEU		FEU
49VOC-CWF		FIRE
49VOC-CWS		Simplex logo only
		إنذار/ALERT
49VOC-CWBCF	White	火警/FIRE حريق/FIRE

Table 5: Wire guards

Model	Description
49WG-VOCR	VO Ceiling Mount Red Wire Guard
49WGBB-VOCR	VO Ceiling Mount Wire Guard Back Box

Note: * (-BA) indicates model is available either with or without the -BA suffix. Model numbers ending in –BA are assembled in the USA

IDNAC SLC controller compatibility reference

Table 6: Compatibility reference

Compatible Controllers	Data Sheet Reference	Controller Output	IDNAC SLC Output Voltage	Appliance Voltage Design Reference
4100ES with EPS+ or EPS Power Supply	S4100-0100	IDNAC SLC	29 VDC (regulated)	23 VDC (with 6 VDC drop)
4009 IDNAC Repeater	S4009-0004			
4007ES Fire Alarm Control Unit with IDNAC	S4007-0002			
Note: See TrueAlert ES V/O LEGACY compatibility reference for 17 VDC ratings				

Ceiling mount V/O specifications

Table 7: Specifications

Specification	Rating
Environmental	32°F to 120°F (0°C to 49°C); 10% to 93%, non-condensing at 104°F (40°C)
Connections	Terminal blocks for 18 AWG to 12 AWG (0.82 mm^2 to 3.31 mm^2); two wires per terminal for in/out wiring. Use Unshielded Twisted Pair (UTP) for IDNAC.
IDNAC SLC Loading	Maximum of 127 addresses per SLC, 139 unit loads. See device and compatible FACU Installation Instructions for circuit current load limits.

Table 8: Percentage of rated light output at room temperature

Angle	On-Axis	Vertical, Below Axis		Horizontal, Left/Right of Axis	
	0°	45°	90°	45°	90°
UL required output	100%	45%	25%	45%	25%
Typical output	327%	134%	83%	129%	47%

RSN: 1844554
Permit: 2024-2476680-LT
Sheet 58 of 68

Table 9: Appliance specifications

Specification		**Rating**						
Operating Voltage Range		23 VDC to 30 VDC, Special Application						
Supervisory Requirements		1 unit load (= 0.8 mA FACU current)						
Flash Rate and Synchronized SLC Loading		1 Hz; with up to 63 synchronized strobes maximum per powered circuit, max 127 S/V appliances per IDNAC channel						
Current consumption, see note	**Candela Setting**	**15 cd**	**30 cd**	**75 cd**	**90/95 cd**	**110 cd**	**135 cd**	**185 cd**
	49VO model	55 mA	83 mA	153 mA	N/A	199 mA	N/A	N/A
	49VOH model	N/A	N/A	N/A	N/A	253 mA	296 mA	377 mA
	49VOH amber lens	N/A	N/A	N/A	253 mA (90 cd)	296 mA	377 mA	N/A
	49VOH blue lens	N/A	N/A	253 mA	296 mA (95 cd)	377 mA	N/A	N/A
Note: Measured at 23 VDC on IDNAC Addressable SLC								

TrueAlert ES V/O LEGACY compatibility reference

Table 10: Compatibility reference

Compatible Controller	**Data Sheet Reference**	**Controller Output**	**Available Strobe Intensity**	**Appliance Voltage Minimum**
4100ES or 4100U with TrueAlert Power Supply	S4100-0031	TrueAlert Addressable SLC	15 cd, 30 cd, 75 cd, and 110 cd	17 VDC
4009 TPS, Remote TrueAlert 17 VDC Power Supply, see note.	S4100-0037			
TrueAlert Addressable Controller (4009T)	S4009-0003			
Electrical ratings differences for legacy applications, see IDNAC SLC controller compatibility reference for 29 VDC ratings				
Voltage Range		17 VDC to 31 VDC, Special Application		
Candela Setting	**15 cd**	**30 cd**	**75 cd**	**110 cd**
17 VDC RMS Current Ratings, with horn on continuous at high setting, use when connected to TrueAlertAddressable SLCs per above	73 mA	114 mA	210 mA	269 mA

Note: * For connection to legacy fire panel models Simplex 4009T and 4100/TPS. High candela (49VOH) appliances are not compatible with Simplex models 4009T and TPS, see the fire panel compatibility charts.

© 2024 Johnson Controls. All rights reserved. All specifications and other information shown were current as of document revision and are subject to change without notice. Additional listings may be applicable, contact your local Simplex® product supplier for the latest status. Listings and approvals under Simplex Time Recorder Co. Simplex, and the product names listed in this material are marks or registered marks. Unauthorized use is strictly prohibited. NFPA 72 and National Fire Alarm Code are registered trademarks of the National Fire Protection Association (NFPA).

Simplex

TrueAlert ES Addressable Notification Appliances

UL, ULC, CSFM Listed;
*FM Approved**

Wall Mount Visible & Audible/Visible Notification Appliances for Emergency Communications

Features

Individually addressed and controlled multi-candela TrueAlert ES Emergency Communications appliances provide:

- Multi-candela xenon strobe with synchronized 1 Hz flash rate and with intensity ***programmable from the control panel*** or jumper selected
- Standard strobe models *with amber lens covers*, available with ALERT lettering or blank, and with red or white covers, available with 15, 30, 75, 110, or 135 cd output
- Separate lens covers are available in *amber, blue, green, and red* to configure strobes (V/O) or audible/visible (A/V) appliances (see ordering details on page 2 and candela ratings on page 4)
- Advanced addressable notification controlled by ***IDNAC SLCs*** providing ***regulated 29 VDC*** allowing strobes to operate with lower current even under battery backup
- Emergency Communications appliances are controlled separately from fire alarm appliances but both can be on the same IDNAC SLC; (only one type activates at a time, ether fire alarm or notification, not both)
- Wiring supervision to each appliance allowing "T-tapped" connections for Class B circuits to simplify wiring (Class A circuits require in/out wiring)

Provides TrueAlert ES product features:

- ***Self-Test Mode*** using on-board sensors
- ***TrueAlert Device Reports*** at the control panel
- ***Magnet Test diagnostics*** to assist checkout and test
- Compatibility with ADA requirements; (see page 3)
- Compatibility with legacy TrueAlert addressable systems for upgrade and replacement (see page 4)
- Appliance LED can be selected to display polling
- UL listed to Standard 1638 (due to non-white lens); verified by UL testing to provide light dispersion patterns of UL Standard 1971 at rated candela (no derating necessary for amber or blue lens)
- ULC listed to Standard S526

Mechanical design features include:

- Rugged, high impact, flame retardant thermoplastic housing in red with white letters or white with red letters, available with ALERT or blank lettering
- Separate covers, optional mounting adapters and red wire guards are available
- A separate mounting plate allows wiring to be completed before appliance is mounted; use with single gang, double gang, or 4-inch square box, flush or surface mount
- In/out wiring terminals for 18 AWG to 12 AWG

For clear lens TrueAlert ES appliances:

- Refer to data sheet S49VO-0001 for strobes
- Refer to data sheet S49AV-0001 for A/Vs

* These products have been approved by the California State Fire Marshal (CSFM) pursuant to Section 13144.1 of the California Health and Safety Code. See CSFM Listing 7125-0026:0373 (for 49AV-APPLW(-BA)) and 7300-0026:0374 (for color lens products) for allowable values and/or conditions concerning material presented in this document. Additional listings may be applicable; contact your local Simplex product supplier for the latest status. Listings and approvals under Simplex Time Recorder Co. are the property of Tyco Fire Protection Products.

TrueAlert ES Notification Appliances for Emergency Communications are available with ALERT or Blank

Description

TrueAlert ES addressable appliances are individually addressed and receive power, supervision, and control signals from a Simplex fire alarm control panel providing **IDNAC** Signaling Line Circuits (SLCs). (See compatibility list on page 4.)

Strobe Application Reference

Proper selection of visible notification is dependent on occupancy, location, local codes, and proper applications of: the *National Fire Alarm Code* (NFPA 72), ANSI A117.1; the appropriate model building code: BOCA, ICBO, or SBCCI; and the application guidelines of the Americans with Disabilities Act (ADA).

TrueAlert ES Operation Advantage

TrueAlert ES addressable appliances on IDNAC SLCs provide separate visible and audible notification using a single two-wire circuit that also *confirms connection to the individual notification appliance's electronic circuit*. This operation increases circuit supervision integrity by providing supervision that extends beyond the appliance wiring connections.

Reduced current allows efficient IDNAC SLC operation. With ***IDNAC SLCs***, a ***constant*** 29 VDC source voltage is maintained, even during battery standby, allowing strobes to operate at higher voltage with lower current and ensuring a consistent current draw and voltage drop margin under both primary power and secondary battery standby. Efficiencies include wiring distances up to 2 to 3 times farther than with conventional notification, or support for more appliances per IDNAC SLC, or use of smaller gauge wiring, or combinations of these benefits, all providing installation and maintenance savings with high assurance that appliances that operate during normal system testing will operate during worst case alarm conditions.

TrueAlert ES Operation Advantage *(Cont'd)*

Reducing Installation and Testing Time. With separate controls on the same two-wire SLC, installation time and expense for both retrofit and new construction can be significantly reduced. When Class B wiring is used, *wiring can be "T" tapped*, allowing more savings in distance, wire, conduit (size and utilization), and overall installation efficiency. Use of Self-Test and Magnet Test features improves installation efficiency. TrueAlert device reports conveniently identify information about each connected appliance.

TrueAlert ES Diagnostics

Test Features. When IDNAC SLCs are in diagnostic mode, *Self-Test* and *Magnet Test* features provide individual appliance testing. With the *Self-Test* feature, *appliance operation can be confirmed without leaving the control panel*. Additionally, each appliance's LED can be selected to pulse when it receives a supervision poll during normal operation.

***Self-Test* Details.** Selecting Self-Test Mode from the control panel allows on-board sensors, depending on the device type, to detect its own strobe and/or horn output and then report their status to the control panel.

TrueAlert ES Diagnostics *(Continued)*

***Self-Test* Details** *(Continued)*. Operation is by selected VNAC appliance groups and is either automatic (all briefly simultaneously activated) or individually activated by applying a magnet. (Refer to control panel data sheet for more Self-Test information, see list on page 4.)

Silent Appliance Magnet Test. In this test mode, in response to application of a magnet, the appliance LED pulses sequentially to conveniently indicate the appliance's address.

Operational Appliance Magnet Test. In this test mode, after the address is indicated by pulsing the appliance LED, the strobe will briefly flash to indicate proper operation.

TrueStart Instrument Two (TSIT). The 2nd generation of the Simplex TrueStart Test Instrument adds testing of IDNAC SLC wiring and TrueAlert ES appliances to its ability to test IDCs, NACs, and IDNet communications *before connection to the control panel*. Please contact your local Simplex representative for additional information.

TrueAlert Addressable Wiring Isolator

Isolator Model 4905-9929 is available for remote mounting on TrueAlert addressable circuits to isolate short circuited wiring from functioning wiring. (See data sheet S4905-0001.)

Product Selection

TrueAlert ES Wall Mount Addressable Strobes (V/O) with Color Lens

Model*	Cover Color	Lettering	Lens Color	Description
49VO-WRA-A(-BA)	Red	ALERT	Amber	Complete assembly with amber lens cover, housing cover with color and lettering as indicated, and matching mounting plate; Dimensions with cover = 5 ⅛" H x 5" W x 2 ⅝" D (130 mm x 127 mm x 67 mm
49VO-WWA-A(-BA)	White	ALERT	Amber	
49VO-WWS-A-BA	White	Blank	Amber	

Configured Appliance Selection (Lens covers include correct intensity selection plug)

Model*	Description	
49VO-APPLWE(-BA)	V/O Housing for color lens Emergency Communications Appliances	**Order lens cover, housing cover, and mounting plate separately**
49AV-APPLW(-BA)	A/V Housing (has setting on-board for selecting color lens applications)	

Color Lens Covers	49LENS-AMBER	49LENS-BLUE	49LENS-GREEN	49LENS-RED

Separate Mounting Plate (**Required** when ordering model 49VO-APPLWE(-BA) or 49AV-APPLW(-BA))

Model*	Color	Model*	Color
49MP-AVVOWR	Red	49MP-AVVOWW	White

*** Note:** (-BA) indicates model is available either with or without the -BA suffix. Model numbers ending in -BA, APPLW and APPLWE models, and separate mounting plates are assembled in the USA.

Housing Covers (**Required** when ordering model 49VO-APPLWE(-BA) or 49AV-APPLW(-BA))

Color	V/O ALERT Lettering	V/O Blank Lettering	A/V ALERT Lettering	A/V Blank Lettering
Red	49VOC-WRALT	49VOC-WRS	49AVC-WRALT	49AVC-WRS
White	49VOC-WWALT	49VOC-WWS	49AVC-WWALT	49AVC-WWS

Mounting Adapters and Wire Guard

Model	Color	Description	Dimensions
4905-9937	Red	Surface Mount Adapter Skirt	5 ⅜" H x 5 ¼" W x 1 ⅝" D (136 mm x 133 mm x 41 mm) Total depth with strobe = 4 ⅜" (111 mm)
4905-9940	White	Surface Mount Adapter Skirt	5 ⅜" H x 5 ¼" W x 1 ⅝" D (136 mm x 133 mm x 41 mm) Total depth with strobe = 4 ⅜" (111 mm)
4905-9931	Red Adapter Plate for mounting to Simplex 2975-9145 Box (typically for retrofit, mount vertical or horizontal)		8 5/16" x 5 ¾" x 0.060" Thick (211 mm x 146 mm x 1.5 mm)
2975-9145	Red Mounting Box, requires 4905-9931 Adapter Plate		7 ⅞" x 5 ⅛" x 2 ¾" D (200 mm x 130 mm x 70 mm)
4905-9961	Red wire guard with mounting plate, compatible with semi-flush or surface mount boxes		6 1/16" H x 6 1/16" W x 3 ⅛" D (154 mm x 154 mm x 79 mm)

TrueAlert Device Reports Reference

Service Port — Page 1
REPORT 5 : TrueAlert Device Report — 12:34:56am TUE 27-Jan-15

POINT ID	CUSTOM LABEL	DEVICE TYPE	CANDELA
T14-1-1	Location Label . . . up to 40 characters	V/O	15
T14-1-2	Break Room 5	A/V	110
T14-1-3	Boiler Room	A/V	75
T14-1-4	Elec. Room 7	A/V	135

Installation Reference

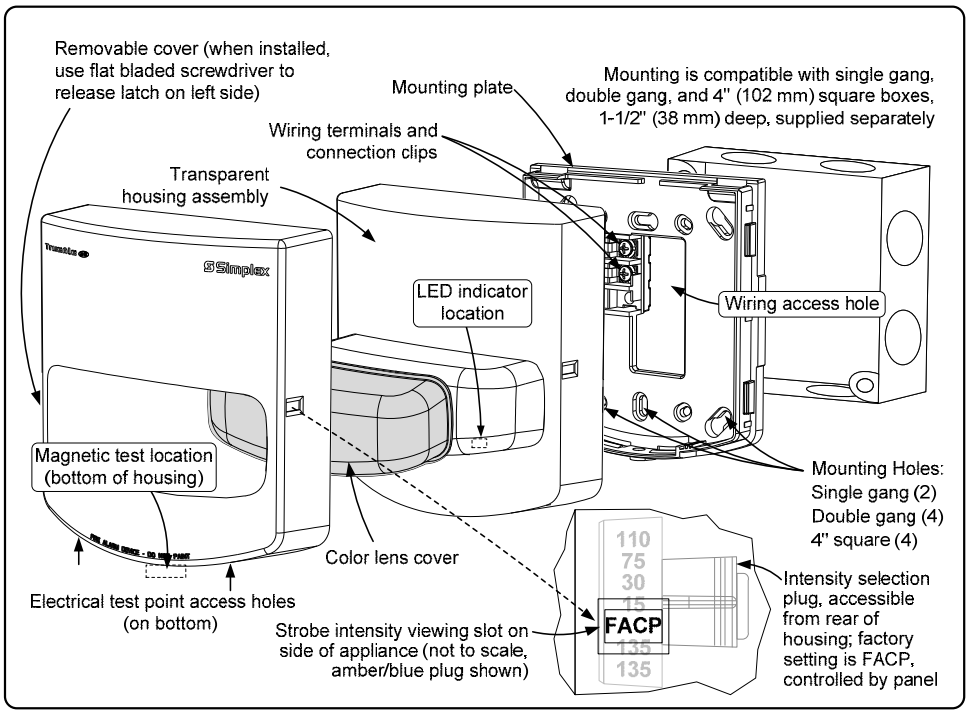

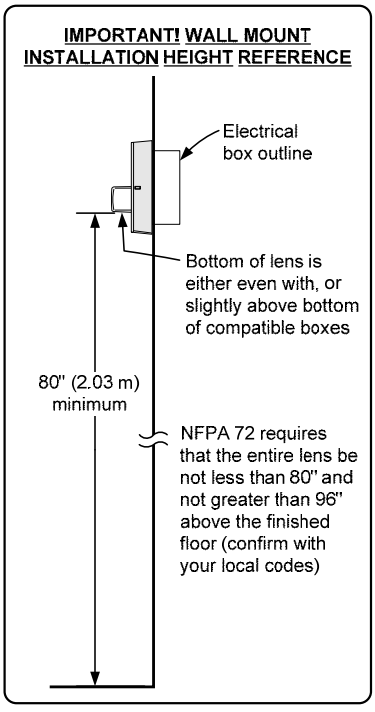

Adapter Plate and Surface Mount Installation Reference

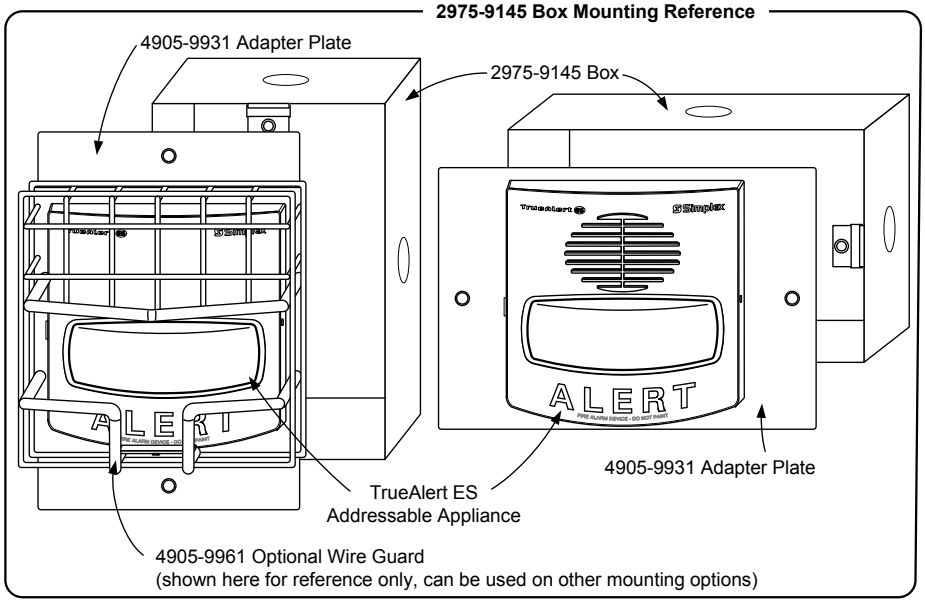

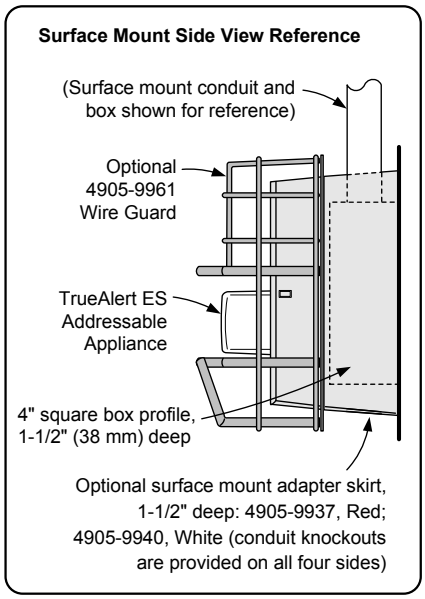

IDNAC SLC Controller Compatibility Reference

Compatible Controllers	Data Sheet Reference	Controller Output	IDNAC SLC Output Voltage	Appliance Voltage Design Reference
4100ES with EPS+ or EPS Power Supply	S4100-0100	IDNAC SLC	29 VDC (regulated)	23 VDC (with 6 VDC drop)
4009 IDNAC Repeater	S4009-0004			
4007ES with IDNAC Notification	S4007-0002			
4010ES with ESS Enhanced System Supply	S4010-0011			

TrueAlert ES with Color Lens Specifications

Electrical Ratings

Typical Operating Voltage Range		23 VDC to 31 VDC, Special Application (see below for 17 VDC rating)					
Supervisory Requirements		1 unit load (= 0.8 mA control panel current)					
IDNAC SLC Loading		Maximum of 127 addresses per SLC, 139 unit loads					
Appliance PC Board Marking Reference		**15 cd**	**30 cd**	**75 cd**	**110 cd**	**135 cd**	**185 cd**
Amber and **Blue** Lens Output Rating		**15 cd**	**30 cd**	**75 cd**	**110 cd**	**135 cd**	Not Available
Green Lens Output Rating		**10 cd**	**20 cd**	**45 cd**	**75 cd**	**95 cd**	
Red Lens Output Rating		**3 cd**	**7 cd**	**15 cd**	**30 cd**	**37 cd**	
23 VDC RMS Current Ratings, for typical design of IDNAC Addressable SLCs (6 VDC drop)	V/O	54 mA	78 mA	128 mA	184 mA	211 mA	
	A/V	66 mA	88 mA	137 mA	192 mA	219 mA	

General Specifications

Temperature Range	32° to 122° F (0° to 50° C)
Humidity Range	10% to 93%, non-condensing @ 104° F (40° C)
IDNAC SLC Wiring Specifications (refer to control panel installation instructions for more information)	UTP, unshielded twisted pair recommended
	Maximum wire length allowed with "T-Taps" for Class B wiring per SLC = 10,000 ft (3048 m)
	Maximum wire length to any appliance = 4000 ft (1219 m)
Connections	Terminal blocks on mounting plate for 18 AWG to 12 AWG (0.82 mm^2 to 3.31 mm^2); two wires per terminal for in/out wiring
Installation Instructions	579-1052, *TrueAlert ES Addressable Emergency Indoor Notification Appliances* 579-1046, *TrueAlert ES A/V and V/O Colored Lens Kit Installation Instructions*

Notes: Refer to compatibility table above for fire alarm control panel and power supply operation type.

TrueAlert ES Strobe with Color Lens LEGACY Compatibility Reference

Compatible Controller	Data Sheet Reference	Controller Output	Available Strobe Intensity	Appliance Voltage Minimum
4100ES or 4100U with TrueAlert Power Supply	S4100-0031	TrueAlert Addressable SLC	15, 30, 75, and 110 cd	17 VDC
4009 TPS, Remote TrueAlert Power Supply	S4100-0037			
TrueAlert Addressable Controller (4009T)	S4009-0003			

Electrical Ratings Reference for Retrofit Applications

Voltage Range		17 VDC to 31 VDC, Special Application					
Appliance PC Board Marking Reference		**15 cd**	**30 cd**	**75 cd**	**110 cd**	**135 cd**	**185 cd**
Amber and **Blue** Lens Output Rating		**15 cd**	**30 cd**	**75 cd**	**110 cd**	Not Available	
Green Lens Output Rating		**10 cd**	**20 cd**	**45 cd**	**75 cd**		
Red Lens Output Rating		**3 cd**	**7 cd**	**15 cd**	**30 cd**		
17 VDC RMS Current Ratings, use when connected to TrueAlert Addressable SLCs per above	V/O	67 mA	103 mA	171 mA	250 mA		
	A/V	79 mA	113 mA	180 mA	258 mA		

TYCO, SIMPLEX, and the product names listed in this material are marks and/or registered marks. Unauthorized use is strictly prohibited. NFPA 72 and National Fire Alarm Code are trademarks of the National Fire Protection Association (NFPA).

© 2016 Tyco Fire Protection Products. All rights reserved. All specifications and other information shown were current as of document revision date and are subject to change without notice.

Simplex

*UL, ULC, CSFM Listed; FM Approved**

TrueAlert ES Addressable Notification Appliances

Visible Notification Appliances, Wall Mount Multi-Candela Strobes, Model Series 49VO

Features

Individually addressed and controlled multi-candela TrueAlert ES V/O (visible only) notification appliances provide:

- Multi-candela xenon strobe with synchronized 1 Hz flash rate and with intensity ***programmable from the control panel*** or jumper selected as 15, 30, 75, 110, 135, or 185 cd
- Advanced addressable notification controlled by **IDNAC SLCs** providing *regulated 29 VDC* allowing strobes to operate with lower current even under battery backup
- Wiring supervision to each appliance allowing "T-tapped" connections for Class B circuits to simplify wiring (Class A circuits require in/out wiring)
- *Self-Test Mode* allows an on-board sensor to detect the strobe output and then report its status to the control panel
- *TrueAlert Device Reports* at the control panel detailing appliance point ID, custom label, type, and candela setting
- *Magnet Test diagnostics* to assist checkout and testing of appliances and wiring and *Electrical test point access* without removing cover
- Compatibility with ADA requirements; (refer to Installation Reference)
- Compatibility with legacy TrueAlert addressable systems for upgrade and replacement (see TrueAlert ES Strobe LEGACY Compatibility Reference)
- Listed to UL Standard 1971 and ULC Standard S526

LED Indicator and Magnet Test feature:

- Appliance LED can be selected to display each polling cycle to indicate appliance supervision
- When the controller is in diagnostic mode, the Magnet Test pulses the LED to indicate appliance address and can be set to also briefly flash the strobe

Mechanical design features include:

- Rugged, high impact, flame retardant thermoplastic housing in red with white letters or white with red letters, with clear lens, available with FIRE, ALERT, FEU, FEU/FIRE, or blank lettering
- Separate covers are available to change appliance type on-site or for replacement; covers can be easily removed without disturbing the connected housing and avoiding trouble conditions
- A separate mounting plate allows wiring to be completed before appliance is mounted; use with single gang, double gang, or 4-inch square box, flush or surface mount
- In/out wiring terminals for 18 AWG to 12 AWG
- Optional mounting adapters are available to cover surface mounted electrical boxes and to adapt to Simplex, 2975-9145 boxes
- Optional red wire guards (see Product Selection)

Description

TrueAlert ES addressable strobes

TrueAlert ES addressable strobes are individually addressed visible notification appliances that receive power, supervision, and control signals from the Simplex fire alarm control panel providing **IDNAC** Signaling Line Circuits (SLCs). (See IDNAC SLC Controller Compatibility Reference.)

Strobe Application Reference

Proper selection of visible notification is dependent on occupancy, location, local codes, and proper applications of: the *National Fire Alarm Code* (NFPA 72), ANSI A117.1; the appropriate model building code: BOCA, ICBO, or SBCCI; and the application guidelines of the Americans with Disabilities Act (ADA).

Figure 1: TrueAlert ES Addressable Strobes are Available in Red with White Lettering and White with Red Lettering

TrueAlert ES Operation Advantage

TrueAlert ES addressable appliances on IDNAC SLCs provide separate visible (and audible) notification using a single two-wire circuit that also *confirms connection to the individual notification appliance's electronic circuit*. This operation increases circuit supervision integrity by providing supervision that extends beyond the appliance wiring connections.

Reduced current allows efficient IDNAC SLC operation. With *IDNAC SLCs*, a *constant* 29 VDC source voltage is maintained, even during battery standby, allowing strobes to operate at higher voltage with lower current and ensuring a consistent current draw and voltage drop margin under both primary power and secondary battery standby. Efficiencies include wiring distances up to 2 to 3 times farther than with conventional notification, or support for more appliances per IDNAC SLC, or use of smaller gauge wiring, or combinations of these benefits, all providing installation and maintenance savings with high assurance that appliances that operate during normal system testing will operate during worst case alarm conditions.

Reducing Installation and Testing Time. With separate controls on the same two-wire SLC, installation time and expense for both retrofit and new construction can be significantly reduced. When Class B wiring is used, *wiring can be "T" tapped*, allowing more savings in distance, wire, conduit (size and utilization), and overall installation efficiency. Use of Self-Test and Magnet Test features improves installation efficiency. TrueAlert device reports conveniently identify information about each connected appliance.

* These products have been approved by the California State Fire Marshal (CSFM) pursuant to Section 13144.1 of the California Health and Safety Code. See CSFM Listing 7125-0026:0373 for allowable values and/or conditions concerning material presented in this document. Additional listings may be applicable; contact your local Simplex product supplier for the latest status. Listings and approvals under Simplex Time Recorder Co. are the property of Tyco Fire Protection Products.

RSN: 1844554
Permit: 2024-2476680-LT
Sheet 64 of 68

TrueAlert ES Diagnostics

Test Features. When IDNAC SLCs are in diagnostic mode, ***Self-Test*** and ***Magnet Test*** features provide individual appliance testing. With the ***Self-Test*** feature, ***appliance operation can be confirmed without leaving the control panel***. Additionally, each appliance's LED can be selected to pulse when it receives a supervision poll during normal operation.

Self-Test Details. Selecting Self-Test Mode from the control panel allows on-board sensors, depending on the device type, to detect its own strobe and/or horn output and then report their status to the control panel. Operation is by selected VNAC appliance groups and is either automatic (all briefly simultaneously activated) or individually activated by applying a magnet (Refer to control panel data sheet for more Self-Test information, see IDNAC SLC Controller Compatibility Reference).

Silent Appliance Magnet Test. In this test mode, in response to application of a magnet, the appliance LED pulses sequentially to conveniently indicate the appliance's address.

Operational Appliance Magnet Test. In this test mode, after the address is indicated by pulsing the appliance LED, the strobe will briefly flash to indicate proper operation.

TrueStart Instrument Two (TSIT). The 2nd generation of the Simplex TrueStart Test Instrument adds testing of IDNAC SLC wiring and TrueAlert ES appliances to its ability to test IDCs, NACs, and IDNet communications ***before connection to the control panel***. Please contact your local Simplex representative for additional information.

TrueAlert Addressable Wiring Isolator

Isolator Model 4905-9929 is available for remote mounting on TrueAlert addressable circuits to isolate short circuited wiring from functioning wiring. (See data sheet *S4905-0001* .)

RSN: 1844554
Permit: 2024-2476680-LT
Sheet 65 of 68

Installation Reference

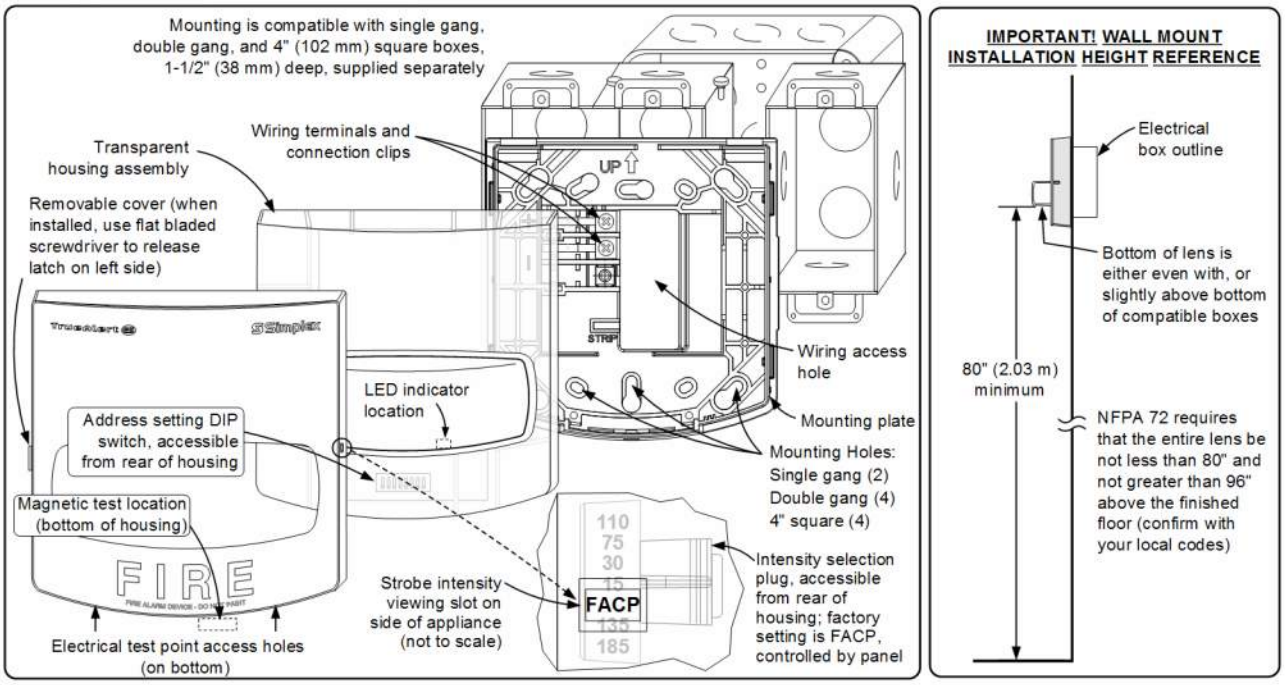

Figure 2: Installation Reference

Adapter Plate and Surface Mount Installation Reference

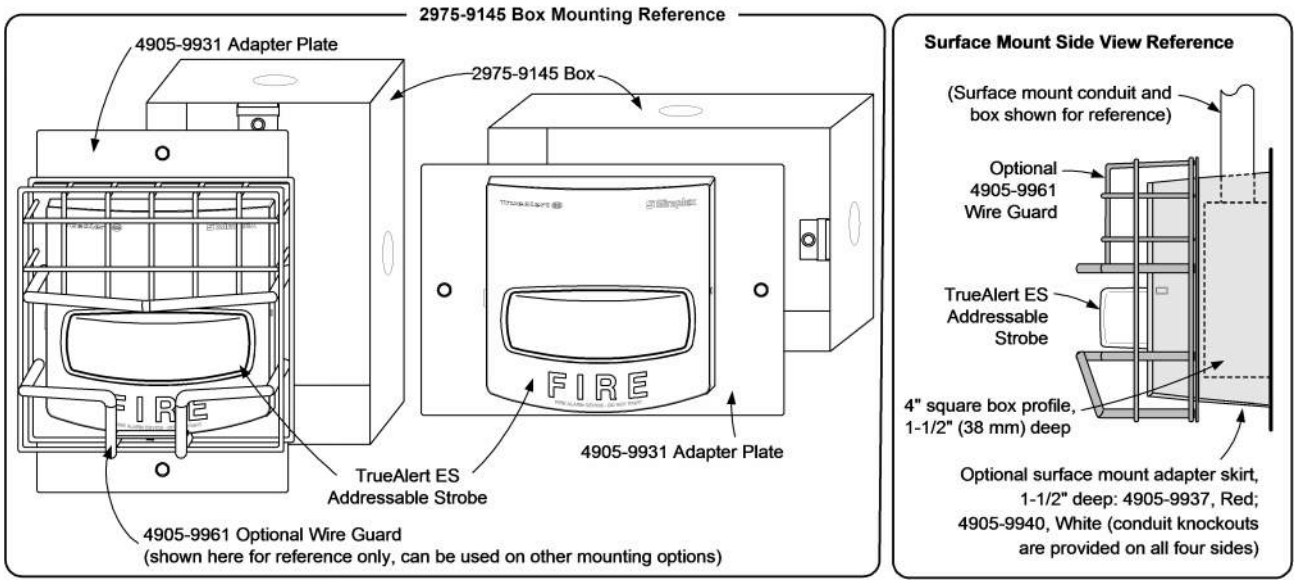

Figure 3: Adapter Plate and Surface Mount Installation Reference

The 2975-9145 box is shown mounted to the 4905-9931 Adapter Plates. Also shown is the optional surface mount adapter skirt (available in red 4905-9937 or white 4905-9940)., as well as the 4905-9961 optional wire guard.

RSN: 1844554
Permit: 2024-2476680-LT
Sheet 66 of 68

Product Selection

Table 1: TrueAlert ES Wall Mount Addressable Strobes

SKU*	Cover Color	Wording	Lens Color
49VO-WRF 49VO-WRF-BA	Red	FIRE	Clear
49VO-WWF 49VO-WWF-BA	White		
49VO-WRA 49VO-WRA-BA	Red	ALERT	
49VO-WWA 49VO-WWA-BA	White		
49VO-WRQ	Red	FEU	
49VO-WWQ	White		
49VO-WRS 49VO-WRS-BA	Red	Simplex logo only	
49VO-WWS 49VO-WWS-BA	White		
49VO-APPLW 49VO-APPLW-BA	Select cover and mounting plate separately		
TrueAlert ES addressable VO (strobe) appliances include cover and matching mounting plate except as noted; Dimensions with Cover = 5 ⅛" H x 5" W x 2 ⅝" D (130 mm x 127 mm x 67 mm)			

Table 2: Separate Mounting Plate

Model	Color	Note
49MP-AVVOWR	Red	Mounting Plate **is required** when ordering model 49VO-APPLW(-BA)
49MP-AVVOWW	White	

Table 3: Separate Covers (Required when ordering model 49VO-APPLW(-BA))

SKU*	Color	Wording
49VOC-WRFIRE	Red	FIRE
49VOC-WWFIRE	White	
49VOC-WRALT	Red	ALERT
49VOC-WWALT	White	
49VOC-WRFEU	Red	FEU
49VOC-WWFEU	White	
49VOC-WRBLNG	Red	FEU/FIRE
49VOC-WWBLNG	White	
49VOC-WRS	Red	Simplex logo only
49VOC-WWS	White	

Table 4: Mounting Adapters and Wire Guard

Model	Color	Description	Dimensions
4905-9937	Red	Surface Mount Adapter Skirt	5 ⅜" H x 5 ¼" W x 1 ⅝" D (136 mm x 133 mm x 41 mm) Total depth with strobe = 4 ⅜" (111 mm)
4905-9940	White		
4905-9931	Red Adapter Plate for mounting to Simplex, 2975-9145 Box (typically for retrofit, mount vertical or horizontal)		8 5/16" x 5 ¾" x 0.060" Thick (211 mm x 146 mm x 1.5 mm)
2975-9145	Red Mounting Box, requires 4905-9931 Adapter Plate		7 ⅞" x 5 ⅛" x 2 ¾" D (200 mm x 130 mm x 70 mm)
4905-9961	Red wire guard with mounting plate, compatible with semi-flush or surface mount boxes		6 1/16" H x 6 1/16" W x 3 ⅛" D (154 mm x 154 mm x 79 mm)

RSN: 1844554
Permit: 2024-2476680-LT
Sheet 67 of 68

IDNAC SLC Controller Compatibility Reference

Compatible Controllers	Data Sheet Reference	Controller Output	IDNAC SLC Output Voltage	Appliance Voltage Design Reference
4100ES with EPS+ or EPS Power Supply	*S4100-0100*	IDNAC SLC	29 VDC (regulated)	23 VDC (with 6 VDC drop)
4009 IDNAC Repeater	*S4009-0004*			
4007ES with IDNAC Notification	*S4007-0002*			
4010ES with ESS Enhanced System Supply	*S4010-0011*			

TrueAlert ES Strobe Specifications

Table 5: Electrical Ratings

Specification	Rating
Typical Operating Voltage Range	23 VDC to 31 VDC, Special Application (see below for 17 VDC rating)
Supervisory Requirements	1 unit load (= 0.8 mA control panel current)
IDNAC SLC Loading	Maximum of 127 addresses per SLC, 139 unit loads

Table 6: Candela Setting

Candela	15 cd	30 cd	75 cd	110 cd	135 cd	185 cd
23 VDC RMS Current Ratings, for typical design of IDNAC Addressable SLCs (6 VDC drop)	47 mA	57 mA	100 mA	132 mA	160 mA	208 mA

Table 7: General Specifications

Temperature Range	32° to 122° F (0° to 50° C)
Humidity Range	10% to 93%, non-condensing @ 104° F (40° C)
IDNAC SLC Wiring Specifications (refer to control panel installation instructions for more information)	UTP, unshielded twisted pair recommended
	Maximum wire length allowed with "T-Taps" for Class B wiring per SLC = 10,000 ft (3048 m)
	Maximum wire length to any appliance = 4000 ft (1219 m)
Connections	Terminal blocks on mounting plate for 18 AWG to 12 AWG (0.82 mm2 to 3.31 mm2); two wires per terminal for in/out wiring
Installation Instructions	579-1031
Note: Refer to compatibility table above for fire alarm control panel and power supply operation type.	

RSN: 1844554
Permit: 2024-2476680-LT
Sheet 68 of 68

TrueAlert ES Strobe LEGACY Compatibility Reference

Table 8: Compatibility Reference

Compatible Controller	Data Sheet Reference	Controller Output	Available Strobe Intensity	Appliance Voltage Minimum
4100ES or 4100U with TrueAlert Power Supply	*S4100-0031*	TrueAlert Addressable SLC	15, 30, 75, and 110 cd	17 VDC
4009 TPS, Remote TrueAlert Power Supply	*S4100-0037*			
TrueAlert Addressable Controller (4009T)	*S4009-0003*			

Table 9: Electrical Ratings Reference for Retrofit Applications

Voltage Range	**17 VDC to 31 VDC, Special Application**			
Candela Setting	**15 cd**	**30 cd**	**75 cd**	**110 cd**
17 VDC RMS Current Ratings, use when connected to TrueAlert Addressable SLCs per above	62 mA	75 mA	133 mA	178 mA

© 2018 Johnson Controls. All rights reserved. All specifications and other information shown were current as of document revision and are subject to change without notice. Additional listings may be applicable, contact your local Simplex® product supplier for the latest status. Listings and approvals under Simplex Time Recorder Co. Simplex, and the product names listed in this material are marks and/or registered marks. Unauthorized use is strictly prohibited. NFPA 72 and National Fire Alarm Code are registered trademarks of the National Fire Protection Association (NFPA).