Johnson Controls

THE MEDICAL CENTER OF AURORA
NEW MRI
MODIFICATION TO EXISTING FIRE ALARM SYSTEM

DRAWING INDEX

Sheet List Table

Sheet Number	Sheet Title
General Information (FA-000 Series)	
△3 FA-001	COVER SHEET
Floorplans (FA-100 Series)	
△3 FA-101	1ST FLOOR PARTIAL DEVICE PLACEMENT PLAN & INTERIM RISER DIAGRAM
Risers (FA-200 Series)	
FA-201	PARTIAL RISER DIAGRAM
Calculations (FA-600 Series)	
△3 FA-601	FIRE ALARM CONTROL PANEL INTERIM CALCULATIONS & SCHEDULES
FA-602	FIRE ALARM CONTROL PANEL INTERIM CALCULATIONS & SCHEDULES (CONT)
△3 FA-603	TRANSPONDER 4 CALCULATIONS & SCHEDULES
△3 FA-604	TRANSPONDER 4 CALCULATIONS & SCHEDULES (CONT)
Typical Details (FA-700 Series)	
FA-701	TYPICAL DEVICE WIRING
Graphic Panels (FA-800 Series)	
FA-801	GRAPHIC MAP AT FIRE COMMAND CENTER 1C-1013A

FIRE DEPT./BLDG DEPT. PLAN REVIEW #:

AURORA BUILDING CODES DIVISION
15151 EAST ALAMEDA PARKWAY, 2ND FLOOR PERMIT CENTER
AURORA, COLORADO 80012
(303) 739-7420

GENERAL NOTES

1. THESE DRAWINGS DEPICT GENERAL LOCATIONS OF LIFE SAFETY EQUIPMENT & FIELD DEVICES. EXACT ROUTING OF CONDUITS IS TO BE DETERMINED IN THE FIELD BY THE INSTALLING CONTRACTOR TO SUIT CONDITIONS. ALL CHANGES SHALL BE CLEARLY INDICATED ON THE RECORD DRAWINGS.
2. SHOULD ANY CONDITIONS EXIST THAT DIFFER FROM WHAT IS INDICATED ON THESE DRAWINGS WHICH CAUSE MAJOR DEVIATIONS IN THE WORK SHOWN, THE CONTRACTOR SHALL CONTACT JOHNSON CONTROLS IN A TIMELY MANNER SO AS NOT TO IMPAIR THE CONSTRUCTION SCHEDULE.
3. CONTRACTOR IS RESPONSIBLE FOR MAKING AND OBTAINING APPROVAL FOR ALL NECESSARY ADJUSTMENTS IN CIRCUITING AS REQUIRED TO ACCOMMODATE THE RELOCATION OF EQUIPMENT AND/OR DEVICES WHICH ARE AFFECTED BY ANY AUTHORIZED CHANGE. ALL CHANGES SHALL BE CLEARLY INDICATED ON THE RECORD DRAWINGS.
4. A STAMPED SET OF APPROVED FIRE ALARM DRAWINGS SHALL BE AT THE JOB SITE AND SHALL BE USED FOR INSTALLATION.
5. THE POWER CIRCUIT TO THE FACP AND TO THE FIRE ALARM POWER SUPPLIES SHALL BE ON A DEDICATED 120V, 20A BRANCH CIRCUIT BREAKER, AND SHALL HAVE A RED MARKING, LOCK-ON PROVISION AND SHALL BE IDENTIFIED AS "FIRE ALARM CIRCUIT CONTROL." THE LOCATION OF THE CIRCUIT DISCONNECT MEANS (CIRCUIT BREAKER) SHALL BE PERMANENTLY IDENTIFIED AT THE FIRE ALARM CONTROL UNIT.
6. UPDATE THE AS-BUILT DRAWING SET DAILY WITH JOB PROGRESS. RETURN THE AS-BUILT DRAWING SET TO JOHNSON CONTROLS NO LATER THAN 7 DAYS AFTER FINAL TEST.
7. THE CONTRACTOR WILL MAINTAIN ALL AREAS OF THE BUILDING IN A NEAT AND WORKMANLIKE MANNER.
8. DO NOT APPLY POWER EXCEPT IN THE PRESENCE OF A FACTORY TRAINED JOHNSON CONTROLS TECHNICAL REPRESENTATIVE.
9. ANY SMOKE DETECTOR HEAD INSTALLED BEFORE THE BUILDING IS CLEANED AND ACCEPTED SHALL BE COVERED TO PROTECT FROM DUST. ANY FALSE ALARMS DUE TO DIRT CONTAMINATED HEADS SHALL BE THE RESPONSIBILITY OF THE FIRE ALARM INSTALLER.
10. THE FIRE ALARM INSTALLER WILL MAINTAIN THE FIRE RESISTANCE INTEGRITY OF ALL WALL, CEILING, AND ROOF ASSEMBLIES ANY TIME THAT WORK IS NOT ACTIVELY BEING PERFORMED.
11. INSTALLATION OF DEVICES SHALL BE IN ACCORDANCE WITH MANUFACTURER'S INSTRUCTIONS. POWER LIMITED AND NON-POWER LIMITED FIELD WIRING MUST BE INSTALLED WITHIN THE FACP ENCLOSURE IN ACCORDANCE WITH MANUFACTURER'S INSTRUCTIONS AND APPLICABLE ELECTRICAL CODES. REFER TO 'APPLICABLE CODES & STANDARDS' FOR SPECIFIC CODE REFERENCES.
12. ALL WIRING SHALL BE INSTALLED ACCORDING TO APPLICABLE ELECTRICAL CODES.
13. FIRE ALARM CIRCUITS SHALL BE IDENTIFIED IN ACCORDANCE WITH APPLICABLE ELECTRICAL CODES. MARK ALL FIRE ALARM WIRES IN ACCORDANCE WITH APPLICABLE ELECTRICAL CODE SECTIONS FOR POWER LIMITED AND NON-POWER LIMITED WIRE.
14. FIRE ALARM CABLE INSTALLED IN DUCTS, PLENUM, AND OTHER SPACES USED FOR ENVIRONMENTAL AIR SHALL BE TYPE FPLP.
15. FIRE ALARM CABLE INSTALLED IN THE VERTICAL RUNS AND PENETRATING MORE THAN ONE FLOOR OR CABLES INSTALLED IN VERTICAL RUNS IN SHAFTS SHALL BE TYPE FPLR.
16. FIRE ALARM CABLE INSTALLED IN UNDERGROUND CONDUIT OR OTHER WET LOCATIONS SHALL BE UL LISTED FOR WET LOCATIONS.
17. FIRE ALARM CIRCUITS EXTENDING BEYOND ONE BUILDING AND RUN OUTDOORS SHALL BE INSTALLED IN ACCORDANCE APPLICABLE ELECTRICAL CODES, WHERE APPLICABLE.
18. ALL WIRING, INCLUDING SHIELDS MUST BE DRY AND FREE OF SHORTS AND GROUNDS.
19. ALL SHIELDED WIRE MUST HAVE SHIELD CONTINUITY AT FULL LENGTH OF THE WIRE.
20. ONLY SYSTEM WIRING CAN BE RUN IN THE SAME CONDUIT.
21. 120VAC IS NOT PERMITTED IN THE SAME CONDUIT WITH LOW VOLTAGE WIRING.
22. MAINTAIN MAXIMUM CONDUIT FILL RATIO AS PER APPLICABLE ELECTRICAL CODES REQUIREMENTS.
23. EXISTING CONDUITS MAY BE USED BY THE INSTALLATION CONTRACTOR AS DEEMED NECESSARY; HOWEVER, ANY EXISTING CONDUIT WILL BE USED ONLY IF CONDUITS MEET CURRENT STANDARDS AND CODES. JOHNSON CONTROLS MAKES NO STATEMENTS WRITTEN OR VERBAL AS TO THE CONDITION OF EXISTING CONDUITS.

IMPORTANT NOTICE TO USER: This information may not be sold or transferred to any third party, used on other projects or additions to the project for which it was prepared, or used for completion of this project by any third party. Johnson Controls disclaims all liability for the use or reuse of altered files by the user or any third party and such use will be a user's sole risk. User shall, to the fullest extent permitted by law, defend, indemnify, and hold Johnson Controls harmless from any and all claims for loss, damage or injury arising directly or indirectly from any such unauthorized use.

FILE PATH: C:\Users\jrauchc\Johnson Controls\Project Electronics - 1501 S Potomac - Aurora South\South Tower - Node 1\28-MRI - 2021 - 619975503\Fire\FA-001.dwg
LAST SAVED BY: JRAUCHC
LAST PRINTED: 3/24/2021 11:51:15 AM
30" x 42" - Arch E1 Size

LEGENDS

FIRE ALARM SYMBOL LEGEND

QTY	SYMBOL	DESCRIPTION	BRAND	MODEL	BACKBOX	WIRE TYPE
		PANELS				
1N	EPR#	4009 TRUEALERT ADDRESSABLE IDNAC REPEATER, 120/240 VAC, PLATINUM W/ SET OF (2) 6.2AH BATTERIES	SIMPLEX	4009-9601 2081-9274	SIMPLEX CABINET	A
		INITIATING DEVICES				
12N	S	ADDRESSABLE PHOTOELECTRIC SMOKE SENSOR W/ STANDARD BASE	SIMPLEX	4098-9714 HEAD 4098-9792 BASE	4" OCT, 1-1/2" D	M
2N	S C	CONVENTIONAL PHOTOELECTRIC 3.5% SMOKE SENSOR W/ 2-WIRE BASE	SIMPLEX	4098-9605 HEAD 4098-9788 BASE	4" OCT, 1-1/2" D	Z
4N		ADDRESSABLE STANDARD HEAT SENSOR W/ STANDARD BASE	SIMPLEX	4098-9733 HEAD 4098-9792 BASE	4" OCT, 1-1/2" D	M
		MODULES AND RELAYS				
1N	AIM	INDIVIDUAL ADDRESSABLE MODULE	SIMPLEX	4090-9001	4"SQ 2-1/2" D W/COVER	M Z
		BRACKET/COVER IAM 2-GANG RED	SPACE AGE	YJ1263		
		NOTIFICATION APPLIANCES				
5N	#	ADDRESSABLE MULTI-TONE HORN/STROBE ,WALL MOUNT, RED, FIRE, SET AT CHIME SETTING	SIMPLEX	49MTV-WRF	SINGLE GANG 1-1/2" D	A
7N	#	ADDRESSABLE MULTI-CANDELA STROBE ,CEILING MOUNT, APPLIANCE ONLY, CLEAR LENS	SIMPLEX	49VO-APPLC	4" SQ. 1-1/2" D	A
		APPLIANCE COVER, WHITE, FIRE LETTERING	SIMPLEX	49VOC-CWF		
		CEILING ADAPTER PLATE SG	SIMPLEX	49VO-APCS		
1RL		NON-ADDRESSABLE CHIME/STROBE, WALL MOUNT, RED	SIMPLEX	4903-9219		
		MISCELLANEOUS DEVICES				
1N	6.8K	END-OF-LINE RESISTOR 6.8K (EOL)	SIMPLEX	4081-9004		
1RL	EOLR	END-OF-LINE RESISTOR 10K (EOL)	SIMPLEX	4081-9008		
1N	FATC	32 PT TERMINAL CABINET	SPACE AGE	SSU00660		

GENERAL NOTES:

1. THE INFORMATION OR SYMBOLS SHOWN IN BOLD LINETYPE ARE NEW OR RELOCATED.
2. THE INFORMATION OR SYMBOLS SHOWN IN LIGHT LINETYPE ARE EXISTING.

FIRE ALARM WIRE LEGEND

	CIRCUIT DESCRIPTION	CONSTRUCTION	GAUGE	CIRCUIT PROPERTIES	FPLR	FPLP	THHN	TFFN	OUTDOOR **	C.I.
					ACCEPTABLE CABLE TYPES					
A	ADDRESSABLE NOTIFICATION	UTP SOLID	14 AWG	60pf/ft. MAX CAPACITANCE; 3 twists/ft. MINIMUM	X	X				
M	IDNET	UTP SOLID	18 AWG	60µF MAX TOTAL LINE CAPACITANCE	X	X				
V	VISUAL	2 COND. SOLID	14 AWG		X	X				
Z	ZONE CIRCUIT	2 COND. SOLID	14 AWG		X	X	X	X		

CONDUIT SIZE	MAX CONDUCTOR AREA	CONDUIT SIZE	MAX CONDUCTOR AREA
1/2"	0.122 SQ. INCH*	1-1/4"	0.598 SQ INCH*
3/4"	0.213 SQ INCH*	1-1/2"	0.814 SQ INCH*
1"	0.346 SQ INCH*	2"	1.342 SQ INCH*
* 40% CONDUIT FILL PER N.E.C.		STP = SHIELDED TWISTED PAIR	

ITEMS SUCH AS CAPACITANCE BETWEEN CONDUCTORS AND WIRE GAUGE CAN BE CRUCIAL TO THE CIRCUIT DESIGN OF THIS SYSTEM INSTALLATION. THE INSTALLING CONTRACTOR IS RESPONSIBLE FOR SELECTING AND INSTALLING CABLE MANUFACTURER AND MODEL THAT MEETS OR EXCEEDS THE ABOVE REQUIREMENTS. RECOMMENDED CABLE MANUFACTURERS AND MODEL NUMBERS ARE AVAILABLE UPON REQUEST.

△3 AURORA BUILDING DIVISION GENERAL NOTES

- FIRE ALARM SYSTEMS CANNOT BE COMBINED WITH BURGLAR ALARM SYSTEMS.
- THE INSTALLER IS REQUIRED TO COORDINATE WITH THE MECHANICAL CONTRACTOR TO DETERMINE INSTALLATION OF SMOKE DETECTORS OR SENSORS (i.e., NOT CLOSER THAN 3 FEET FROM ANY SUPPLY/RETURN DIFFUSER AND THAT ADDITIONAL DETECTION MAY BE REQUIRED DUE TO THE RELOCATION OR SPACING ADJUSTMENT OF DETECTORS, AS A RESULT).
- FIRE ALARM DEVICES MUST BE PLACED IN PROTECTED AREAS WITH AMBIENT TEMPERATURE RANGING FROM 32 DEGREES TO 120 DEGREES F.
- DO NOT PLACE SMOKE DETECTORS WITHIN 3 FEET OF AIR SUPPLY REGISTERS AND DIFFUSERS.
- FIRE ALARM SYSTEM SHALL BE MONITORED BY A CLASS 1 CENTRAL STATION.
- FIRE ALARM CONTROL PANEL WILL BE PLACED IN THE LOCATION SPECIFIED WITHIN THE PLAN SUBMITTAL UNLESS APPROVED BY THE LIFE SAFETY FIELD INSPECTOR.
- CITY OF AURORA BUILDING CODES DIVISION DOES NOT GRANT APPROVAL FOR ANY VIOLATIONS OF ADOPTED FIRE CODE. CODE VIOLATIONS UNCOVERED DURING FIELD INSPECTIONS MUST BE CORRECTED.
- PER THE 2015 IFC AND THE 2020 △1 NEC THE INSTALLER MUST REQUEST A ROUGH WIRING INSPECTION IN THE FIRE ALARM SYSTEM PRIOR TO REQUESTING A FIRE ALARM FINAL INSPECTION.
- THE CONTRACTOR SHALL CONDUCT A "PRE-TEST" OF THE PROJECT AREA PRIOR TO SCHEDULING AN ACCEPTANCE TEST WITH THE BUILDING CODES DIVISION.
- REMOTE ALARM INDICATORS SHALL BE PROVIDED FOR ANY AUTOMATIC FIRE ALARM DETECTOR LOCATED IN A CONCEALED LOCATION WITH A NORMALLY LOCKED DOOR.
- AT THE TIME OF FINAL FIRE ALARM INSPECTION, THE SYSTEM MUST BE SUPERVISED/MONITORED BY A CLASS 1 CENTRAL MONITORING AGENCY.
- THE INSTALLING CONTRACTOR (OR DESIGNEE) MUST PROVIDE ALL NECESSARY TESTING EQUIPMENT AND PERFORM ALL TESTING REQUIRED BY THE LIFE SAFETY FIELD INSPECTOR.
- IN-DUCT SMOKE DETECTORS INSTALLED IN CONCEALED LOCATIONS OR, WHERE THE DETECTOR'S ALARM INDICATOR IS NOT READILY VISIBLE TO RESPONDING PERSONNEL SHALL BE PROVIDED WITH A REMOTE INDICATOR(S), REMOTE TEST STATION AND PLACARDING.
- ALL NEW OR EXISTING FIRE ALARM SYSTEMS MUST BE CONNECTED ANY EXTERIOR HORN AND STROBE APPLIANCE. IF THE BUILDING IS FIRE SPRINKLED, A GENERAL ALARM ACTIVATION AT THE FIRE ALARM CONTROL PANEL WILL ACTIVATE THE EXTERIOR HORN AND STROBE. SILENCING THE PANEL MUST ALLOW THE VISUAL DEVICE TO CONTINUE UNTIL THE PANEL IS RESET.
- FIRE ALARM SYSTEMS SHALL INCLUDE BOTH AUDIBLE AND VISUAL ALARMS. VISUAL ALARMS WILL BE REQUIRED IN ALL ACCESSIBLE PUBLIC AND COMMON-USE AREAS PER THE 2015 IFC AND THE 2009 ANSI A117.1 STANDARD.
- PROVIDE A PRIMARY AND SECONDARY POWER SUPPLY FOR THE FIRE ALARM SYSTEM PER THE 2015 IFC, SECTION 907.5 AND THE 2013 NFPA 72.
- FIELD INSPECTION CONSULTATION IS AVAILABLE UPON REQUEST. CALL 303-739-7420 TO REQUEST CONSULTATION.
- THE FIRE ALARM CONTRACTOR MUST COMPLETE THE NFPA72 "RECORD OF COMPLETION" PRIOR TO SCHEDULING THE AHJ ACCEPTANCE TEST.
- AUDIBLE ALARM SIGNALING DEVICES SHALL EXCEED THE PREVAILING SOUND LEVEL IN A ROOM OR SPACE BY 15 DBA. SOUND LEVELS FOR ALARM SIGNALS SHALL BE 120 DBA MAXIMUM. 2015 IFC SECTION 907.10.2.

△3 APPLICABLE CODES & STANDARDS

JURISDICTIONS WITHIN THE STATE MAY HAVE AMENDMENTS TO THE STATE ADOPTED CODE. CHECK WITH THE LOCAL JURISDICTION AUTHORITY FOR MORE DETAILS.

International Fire Code (IFC), 2015 Edition

National Electric Code (NFPA 70), 2020 Edition

International Building Code (IBC), 2015 Edition

National Fire Alarm and Signaling Code (NFPA 72), 2013 Edition

Colorado Dept. of Health and Environment - Hospital Licensing Rules, 2009 Edition

ICC / ASME A117.1, 2009 Edition

Adopted Chapter 22 and 66 Amendments △3

OCCUPANCY TYPE(S):	SPRINKLER PROTECTION:	AREA:	STORIES:	CONSTRUCTION:
I-2 INSTITUTIONAL GROUP	BUILDING IS FULLY SPRINKLERED	TOTAL: APPROX. 450,396 SQ. FT. SCOPE: APPROX. 2,515 SQ. FT.	TOTAL: 6 STORIES + BASEMENT SCOPE: PARTIAL 1ST FLOOR	TYPE 1-A

SCOPE OF WORK

MODIFY EXISTING FIRE ALARM SYSTEM: PROVIDE NEW DEVICES, RELOCATE AND DEMO EXISTING DEVICES AS SHOWN ON DRAWINGS.

AREA TO RECIEVE WORK INCLUDES APPROXIMATELY 2,515 SQUARE FEET ENCOMPASSING AN EXISTING RADIOLOGY AREA. NEW MRI ROOM AND ACCESSORY ROOMS TO BE BUILT. INTERIM HEAT DETECTION AND NOTIFICATION TO BE USED DURING CONSTRUCTION. HEATS WILL BE NEW AND RE-USE EXISTING BASES OF REMOVED SMOKE DETECTORS WHERE AVAILABLE. INTERIM NOTIFICATION TO BE SUPPLIED WITH EXISTING AND TO BE REMOVED CHIME/STROBE. ALL INTERIM DEVICES TO TIE TO EXISTING NODE 1 FIRE ALARM CONTROL PANEL LOCATED IN FIRE COMMAND CENTER 1E-2902A. AFTER CONSTRUCTION, NEW INITIATION AND NOTIFICATION TO BE INSTALLED IN NEW MRI AREA. ALL DEVICES TO BE ADDRESSABLE EXCEPT THOSE BEING INSTALLED INTO THE NEW MRI 7402A ROOM, AND TIE TO EXISTING TRANSPONDER 4 LOCATED IN ELEC CS16. INITIATION IN NEW MRI 7402A ROOM TO BE MONITORED WITH AN INDIVIDUAL ADDRESSABLE MONITOR AND REPORT TO THE TRANSPONDER 4 AS FIRE. EXISTING GRAPHIC MAP AT THE FIRE COMMAND CENTER 1C-1013A TO BE UPDATED WITH NEW ARCHITECTURE AND NEW INITIATION DEVICES.

ALL NEW WIRING TO BE CLASS B.

NEW DEVICES TO FOLLOW EXISTING SEQUENCE OF OPERATIONS. NO FURTHER CHANGES TO OCCUR.

THE EXISTING FIRE ALARM SYSTEM SHALL NOT BE DISCONNECTED OR TAKEN OUT OF SERVICE WITHOUT WRITTEN PERMISSION FROM THE OWNER. IT IS THE CONTRACTOR'S RESPONSIBILITY TO COORDINATE WITH THE OWNER THE TIMING OF ANY EXISTING FIRE ALARM SYSTEM DEMOLITION WORK.

AUTOMATIC FIRE ALARM SYSTEM SHALL TRANSMIT THE ALARM, SUPERVISORY AND TROUBLE SIGNALS TO AN APPROVED SUPERVISING STATION. THE SUPERVISING STATION SHALL BE LISTED AS EITHER UUFX OR UUJS UNDERWRITERS LABORATORY OR SHALL MEET THE REQUIREMENTS OF FACTORY MUTUAL RESEARCH APPROVAL STANDARD 3011. SUPERVISION OF SYSTEM AND LEASED TELEPHONE LINES SHALL BE ARRANGED BY THE OWNER.

DESIGN STATEMENT

THIS PROJECT'S DESIGN IS BASED ON THE ENGINEERED PLANS AND SPECIFICATIONS PREPARED BY:
PATH 21 ARCHITECTURE + PLANNING

ARCHITECTURAL PLANS DATED:	APRIL 03, 2020
MECHANICAL PLANS DATED:	APRIL 03, 2020
ELECTRICAL PLANS DATED:	APRIL 03, 2020
SPECIFICATIONS DATED:	APRIL 03, 2020
ADDENDUM DATED:	

ABBREVIATIONS LEGEND

AC = ABOVE CEILING
AFF = ABOVE FINISHED FLOOR
AHJ = AUTHORITY HAVING JURISDICTION
ALM = ALARM
ANN = ANNUNCIATOR
BMS = BUILDING MANAGEMENT SYSTEM
C = CEILING MOUNTED
CD = CANDELA RATING
DET = DETECTOR
DGP = DATA GATHERING PANEL
E = EXISTING TO REMAIN
EOL = END OF LINE
EPO = EMERGENCY POWER OFF
ER = ELEVATOR RECALL
FAA = FIRE ALARM ANNUNCIATOR
FACP = FIRE ALARM CONTROL PANEL
FATC = FIRE ALARM TERMINAL CABINET
FBO = FURNISHED BY OTHERS
FCC = FIRE COMMAND CENTER
FSD = FIRE SMOKE DAMPER
FTR = FIRE ALARM TRANSPONDER
H = HIGH HUMIDITY
HT = HEIGHT
HVAC = HEATING VENTILATION & AIR CONDITIONING
IMS = INFORMATION MANAGEMENT SYSTEM
MAX = MAXIMUM
MIN = MINIMUM
N = NEW DEVICE
NAC = NOTIFICATION APPLIANCE CIRCUIT
NDU = NETWORK DISPLAY UNIT
NEC = NATIONAL ELECTRIC CODE
NFPA = NATIONAL FIRE PROTECTION ASSOCIATION
NIC = NOT IN CONTRACT
NPU = NETWORK PROCESSING UNIT
NTS = NOT TO SCALE
PAP = PRE-ACTION PANEL
RC = EXISTING TO REMOVE AND COVER
RD = EXISTING DEVICE TO BE RELOCATED
RL = RELOCATED DEVICE
RR = REMOVE EXISTING & REPLACE W/ EXISTING
SCC = STATUS COMMAND CENTER
SLC = SIGNALING LINE CIRCUIT
SMK = SMOKE
SUPV = SUPERVISORY
TAC = TRUEALERT ADDRESSABLE CONTROLLER
TOS = TOP OF SHAFT
TRBL = TROUBLE
TS = TAMPER SWITCH
TYP = TYPICAL
UON = UNLESS OTHERWISE NOTED
VCC = VOICE COMMAND CENTER
VT = VALVE TAMPER
W = WATTAGE
W/ = WITH
W/O = WITHOUT
WF = WATERFLOW
WG = WIRE GUARD
WP = WEATHERPROOF
XP = EXPLOSION PROOF

JOHNSON CONTROLS CONTACTS

Sales Representative
DANIEL RAAP
DANIEL.RAAP@JCI.COM
PHONE:720-289-8447

Drawings Prepared By
CALE RAUCH
CALE.RAUCH@JCI.COM

Project Manager
MICHAEL MURTEN
MICHAEL.MURTEN@JCI.COM
PHONE:303-345-1047

Drawings Reviewed By
NANCY WILTSIE
NANCY.WILTSIE@JCI.COM

PROJECT DIRECTORY

Site
THE MEDICAL CENTER OF AURORA
1501 SOUTH POTOMAC STREET
AURORA, COLORADO 80012
PHONE: 303-695-2600

Johnson Controls District - 419
14200 E. EXPOSITION AVE
AURORA, CO 80012
PHONE: 303-355-0500
FAX: 303-355-0615
SERVICE: 303-355-0500

Owner
HEALTH ONE
4900 SOUTH MONACO STREET
DENVER, COLORADO 80237
PHONE: 303-946-5511

Installer
E LIGHT ELECTRIC SERVICES, INCORPORATED
361 INVERNES DRIVE, SUITE B
ENGLEWOOD, COLORADO 80112
PHONE: 303-754-0001

DEVICE TAG LEGEND

1:T2:A2-1(E1:1)

PANEL DESIGNATOR
- FA: = FACP (NON-NETWORK)
- #: = NODE NUMBER
- T#: = TRANSPONDER NUMBER
- #:T# = NODE:TRANSPONDER NUMBER
- N#: = NAC EXTENDER NUMBER

CIRCUIT DESIGNATOR
- A# = IDNAC[1] CIRCUIT NUMBER
- D# = DOOR HOLDER CIRCUIT NUMBER
- F# = FIRE PHONE CIRCUIT
- H# = AUDIBLE (HORN) CIRCUIT NUMBER
- M# = IDNET LOOP NUMBER
- P# = POWER CIRCUIT NUMBER
- S# = SPEAKER CIRCUIT NUMBER
- V# = VISUAL CIRCUIT NUMBER
- Z# = ZONE NUMBER

DEVICE NUMBER

BRANCH / ISOLATED LOOP DESIGNATOR:
- (L#) = IDNET ISOLATED LOOP NUMBER
- (#) = IDNAC BRANCH NUMBER
- (E#:#) = EPR[2] NUMBER:BRANCH NUMBER

1. IDNAC = ADDRESSABLE NOTIFICATION CIRCUIT
2. EPR = ENHANCED POWER REPEATER

SYSTEM SEQUENCE OF OPERATIONS

Code violations that are found during inspection are required to be corrected. Permit issuance does not grant approval of a code violation.

Provide a full size set of legible approved construction documents **PRINTED IN COLOR** for review by the Field Inspector.

COA Adopted Codes for this project:
ICC-2015 - NEC-2020
NFPA 13-2013 - NFPA 72-2013
COA Amendments 22 & 66

M.C.O.A. NORTH TOWER (NODE 2) — SEQUENCE OF OPERATIONS

SYSTEM OUTPUTS: FACP Annunciation (A–F); Notification (G–L); Required Controls (M–U); Supplementary (V–X)

A = ACTUATE COMMON ALARM SIGNAL INDICATOR; B = ACTUATE AUDIBLE ALARM SIGNAL; C = ACTUATE COMMON SUPERVISORY SIGNAL INDICATOR; D = ACTUATE AUDIBLE SUPERVISORY SIGNAL; E = ACTUATE COMMON TROUBLE SIGNAL INDICATOR; F = ACTUATE AUDIBLE COMMON TROUBLE SIGNAL; G = ACTUATE EVACUATION SIGNALS (SPEAKERS/STROBES); H = ACTUATE SPRINKLER RISER BELL; I = DISPLAY CHANGE OF STATUS AT REMOTE ANNUNCIATOR; J = TRANSMIT FIRE ALARM SIGNAL TO OFF-SITE REPORTING; K = TRANSMIT SUPERVISORY SIGNAL TO OFF-SITE REPORTING; L = TRANSMIT TROUBLE SIGNAL TO OFF-SITE REPORTING; M = FAN SHUT DOWN; N = DAMPER SHUT DOWN; O = RELEASE CORRIDOR FIRE DOORS; P = RELEASE ELEVATOR FIRE DOORS; Q = RELEASE ASSOCIATED ROLL-UP DOOR; R = ELEVATOR SHUT DOWN (*); S = ELEVATOR RECALL - MAIN FLOOR; T = ELEVATOR RECALL - ALTERNATE FLOOR; U = ELEVATOR HAT FLASH; V = OUTSIDE HORN/STROBE; W = SILENCE AUDIBLE SIGNAL; X = ACTUATE OUTSIDE HORN/STROBE

	SYSTEM INPUTS	A	B	C	D	E	F	G	H	I	J	K	L	M	N	O	P	Q	R	S	T	U	V	W	X	
1	SMOKE DETECTOR	X	X					X		X	X			X	X	X									X	1
2	SMOKE DETECTOR AT 2ND, 4TH & 5TH FLR CLERK DESK	X	X					X		X	X					X		X							X	2
3	SMOKE DETECTOR AT SMOKE PARTITION	X	X					X		X	X					X									X	3
4	MANUAL PULL STATION	X	X					X		X	X					X									X	4
5	HEAT DETECTOR	X	X					X		X	X					X									X	5
6	**DUCT DETECTOR**			X	X			X		X		X		X	X											6
7	**DUCT DETECTOR AT F/S DAMPER**			X	X			X		X		X			X	X										7
8	MAIN FLR. ELEV. LOBBY SMOKE DETECTOR	X	X					X		X	X			X	X	X		X			X				X	8
9	ELEV. LOBBY SMOKE DETECTORS (EXCL. MAIN FLR.)	X	X					X		X	X									X					X	9
10	ELEV. MECH. ROOM SMOKE DETECTOR	X	X					X		X	X														X	10
11	ELEV. SHAFT HEAT DETECTOR	X	X					X		X	X								X	X					X	11
12	ELEV. MECH. ROOM HEAT DETECTOR	X	X					X		X	X								X	X					X	12
13	WATERFLOW SWITCH	X	X					X	X	X	X														X	13
14	TAMPER SWITCH			X	X					X		X														14
15	POST INDICATOR VALVE SWITCH			X	X					X		X														15
16	FACP AC POWER FAILURE					X	X						X													16
17	FACP LOW BATTERY					X	X						X													17
18	OPEN CIRCUIT					X	X						X													18
19	GROUND FAULT					X	X						X													19
20	NOTIFICATION APPLIANCE CIRCUIT SHORT					X	X						X													20
21	**ALARM SIGNAL SILENCE**																							X		21
		A	B	C	D	E	F	G	H	I	J	K	L	M	N	O	P	Q	R	S	T	U	V	W	X	

NOTE: Audible Evacuation Signal shall be Temporal Pattern per NFPA 72.
* Disconnect power after a time delay equal to the time it takes for the car to travel from the highest to the lowest level plus 10 seconds.
New devices will be added to the exsiting sequence of operations. No further changes will occur.
NOTE: New devices will follow the existing Sequence of Operations, no further changes to occur.

RSN: *1523729*
Permit #: *2021-1939814-LT*
City of Aurora Building Division
Reviewed for Code Compliance
By: *M. Apodaca*
Date: *March 25, 2021*
2015 INTERNATIONAL CODES & 2020 NEC

City of Aurora Building Division
Project: *The Medical Center of Aurora - Fire Alarm*
Address: *1501 S POTOMAC ST*
Occupancy Group: *IBC I2*
Construction Type: *IBC IA SPK*
RSN: *1523729*
Permit: *2021-1939814-LT*

Johnson Controls
DISTRICT - 419
14200 E. EXPOSITION AVE
AURORA, CO 80012
SERVICE: 303-355-0500
PHONE: 303-355-0500
FAX: 303-355-0615

NICET CERTIFICATION INFORMATION
NANCY S. WILTSIE
NICET Fire Alarm, III
Certification #93727
Valid Through: 03/01/24
March 24,2021

THE MEDICAL CENTER OF AURORA NEW MRI
THE MEDICAL CENTER OF AURORA
1501 SOUTH POTOMAC STREET
AURORA, COLORADO 80012

ISSUE LOG: Revisions shown with △ symbol

MARK	DATE	CAD	CHK	DESCRIPTION
3	03/23/2021	CBR	NSW	PER CITY AND STATE COMMENTS DATED 03/10/2021 THROUGH 03/17/2021
2	03/04/2021	NSW	JRE	REMOVE DUCT DETECTORS FROM GENERAL ALARM
1	02/26/2021	NSW	JRE	PER AHJ COMMENTS DATED 02/26/2021

FOR PERMIT

DRAWN BY:	CBR
CHECKED BY:	NSW
ISSUE DATE:	2/21/21
JOB #:	
PROJECT #:	419:619975503

JOHNSON CONTROLS © 2021

SYSTEM: FIRE ALARM SYSTEM

SHEET: COVER SHEET

FA-001

© Johnson Controls 2021. All rights reserved. Reuse, copying, modification or alteration of the drawings and other information contained herein is strictly prohibited.

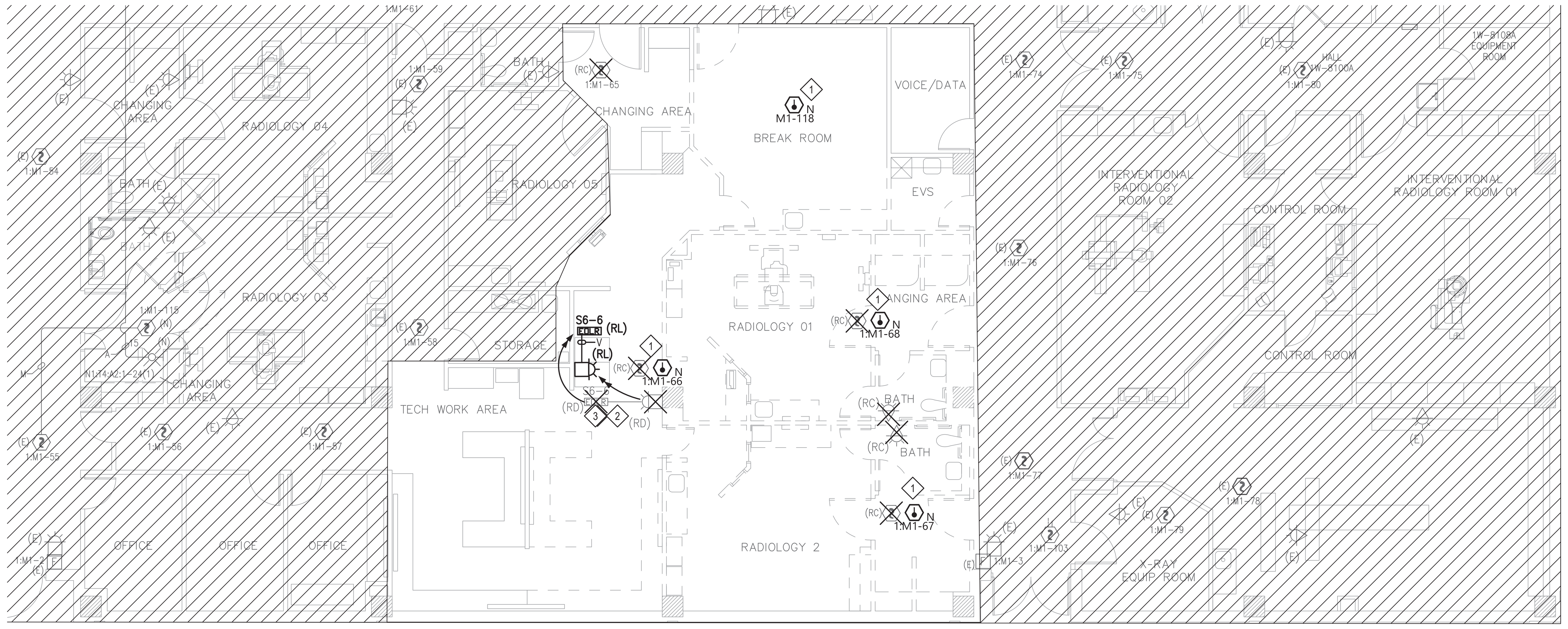

1ST FLOOR PARTIAL INTERIM DEVICE PLACEMENT PLAN
SCALE:1/8" = 1'-0"

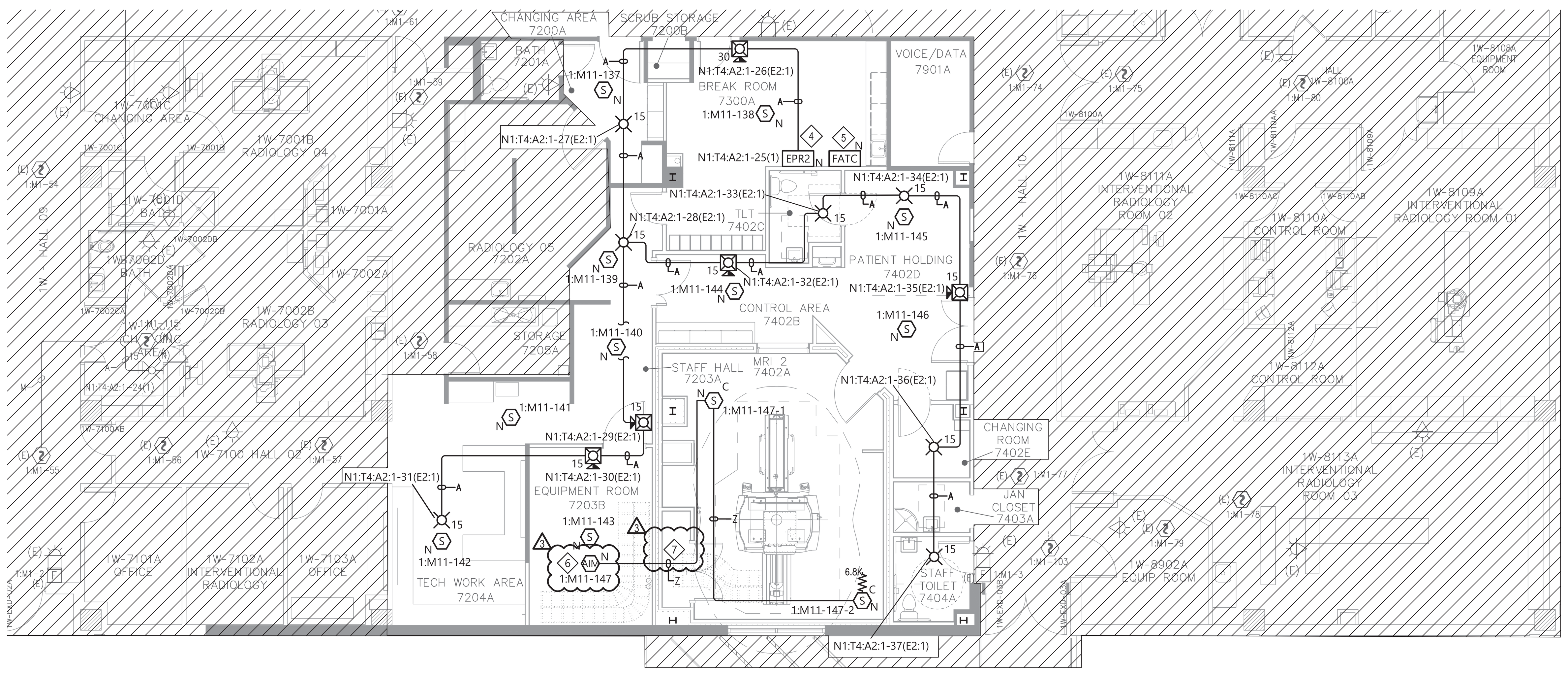

1ST FLOOR PARTIAL DEVICE PLACEMENT PLAN
SCALE:1/8" = 1'-0"

FIRE ALARM SYMBOL LEGEND

QTY	SYMBOL	DESCRIPTION	BRAND	MODEL	BACKBOX	WIRE TYPE
	PANELS					
1N	EPR#	4009 TRUEALERT ADDRESSABLE IDNAC REPEATER, 120/240 VAC, PLATINUM W/ SET OF (2) 6.2AH BATTERIES	SIMPLEX	4009-9601 2081-9274	SIMPLEX CABINET	A
	INITIATING DEVICES					
12N	S	ADDRESSABLE PHOTOELECTRIC SMOKE SENSOR W/ STANDARD BASE	SIMPLEX	4098-9714 HEAD 4098-9792 BASE	4" OCT, 1-1/2" D	M
2N	S C	CONVENTIONAL PHOTOELECTRIC 3.5% SMOKE SENSOR W/ 2-WIRE BASE	SIMPLEX	4098-9605 HEAD 4098-9788 BASE	4" OCT, 1-1/2" D	Z
4N		ADDRESSABLE STANDARD HEAT SENSOR W/ STANDARD BASE	SIMPLEX	4098-9733 HEAD 4098-9792 BASE	4" OCT, 1-1/2" D	M
	MODULES AND RELAYS					
1N	AIM	INDIVIDUAL ADDRESSABLE MODULE	SIMPLEX	4090-9001	4"SQ 2-1/2" D W/COVER	M Z
		BRACKET/COVER IAM 2-GANG RED	SPACE AGE	YJ1263		
	NOTIFICATION APPLIANCES					
5N	#	ADDRESSABLE MULTI-TONE HORN/STROBE ,WALL MOUNT, RED, FIRE, SET AT CHIME SETTING	SIMPLEX	49MTV-WRF	SINGLE GANG 1-1/2" D	A
7N	#	ADDRESSABLE MULTI-CANDELA STROBE ,CEILING MOUNT, APPLIANCE ONLY, CLEAR LENS	SIMPLEX	49VO-APPLC	4" SQ. 1-1/2" D	A
		APPLIANCE COVER, WHITE, FIRE LETTERING	SIMPLEX	49VOC-CWF		
		CEILING ADAPTER PLATE SG	SIMPLEX	49VO-APCS		
1RL		NON-ADDRESSABLE CHIME/STROBE, WALL MOUNT, RED	SIMPLEX	4903-9219		
	MISCELLANEOUS DEVICES					
1N	6.8K	END-OF-LINE RESISTOR 6.8K (EOL)	SIMPLEX	4081-9004		
1RL	EOLR	END-OF-LINE RESISTOR 10K (EOL)	SIMPLEX	4081-9008		
1N	FATC	32 PT TERMINAL CABINET	SPACE AGE	SSU00660		

FIRE ALARM WIRE LEGEND

	CIRCUIT DESCRIPTION	CONSTRUCTION	GAUGE	CIRCUIT PROPERTIES	ACCEPTABLE CABLE TYPES: FPLR	FPLP	THHN	TFFN	OUTDOOR **	C.I.
A	ADDRESSABLE NOTIFICATION	UTP SOLID	14 AWG	60pf/ft. MAX CAPACITANCE; 3 twists/ft. MINIMUM	X	X				
M	IDNET	UTP SOLID	18 AWG	60µF MAX TOTAL LINE CAPACITANCE	X	X				
V	VISUAL	2 COND. SOLID	14 AWG		X	X				
Z	ZONE CIRCUIT	2 COND. SOLID	14 AWG		X	X	X	X		

CONDUIT SIZE	MAX CONDUCTOR AREA	CONDUIT SIZE	MAX CONDUCTOR AREA
1/2"	0.122 SQ. INCH*	1-1/4"	0.598 SQ INCH*
3/4"	0.213 SQ INCH*	1-1/2"	0.814 SQ INCH*
1"	0.346 SQ INCH*	2"	1.342 SQ INCH*

* 40% CONDUIT FILL PER N.E.C. STP = SHIELDED TWISTED PAIR

ITEMS SUCH AS CAPACITANCE BETWEEN CONDUCTORS AND WIRE GAUGE CAN BE CRUCIAL TO THE CIRCUIT DESIGN OF THIS SYSTEM INSTALLATION. THE INSTALLING CONTRACTOR IS RESPONSIBLE FOR SELECTING AND INSTALLING CABLE MANUFACTURER AND MODEL THAT MEETS OR EXCEEDS THE ABOVE REQUIREMENTS. RECOMMENDED CABLE MANUFACTURERS AND MODEL NUMBERS ARE AVAILABLE UPON REQUEST.

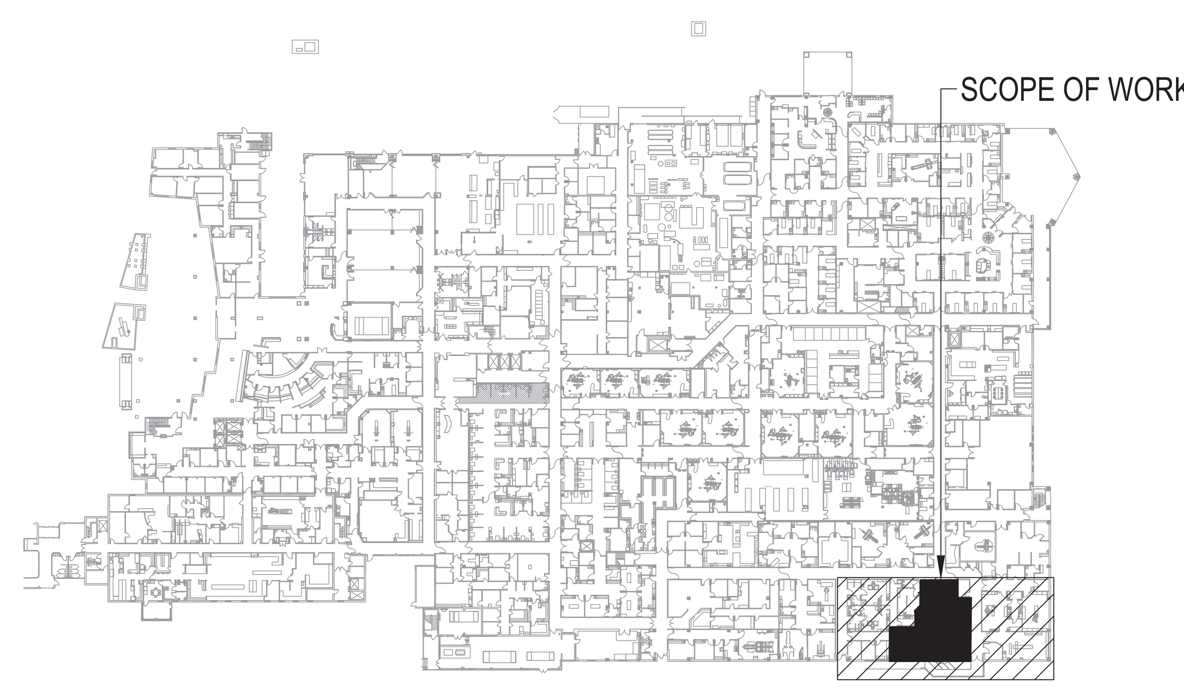

KEYPLAN
SCALE:N.T.S.

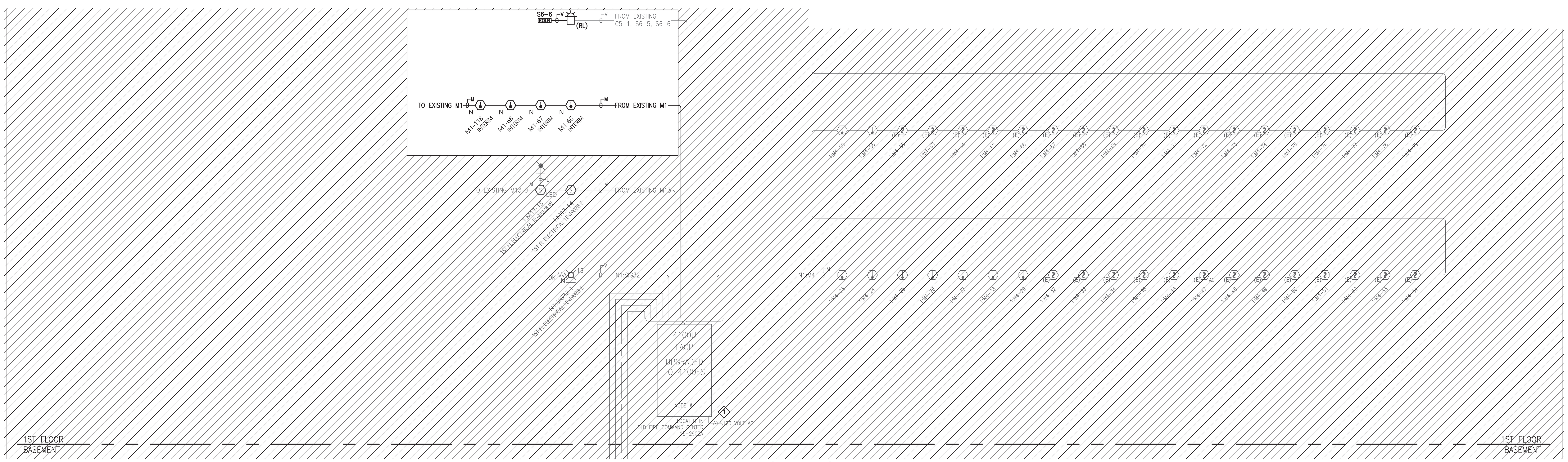

PARTIAL INTERIM RISER DIAGRAM
SCALE:N.T.S.

GENERAL NOTES:

1. ALL CEILINGS ARE ASSUMED TO BE 10' A.F.F., SMOOTH CONSTRUCTION UNLESS NOTED OTHERWISE.
2. ALL NOTIFICATION APPLIANCE CANDELA INTENSITY PLUGS SHALL RETAIN THEIR FACTORY SETTING OF "FACP" UNLESS OTHERWISE DIRECTED BY THE AUTHORITY HAVING JURISDICTION.
3. DO NOT CHANGE DEFAULT APPLIANCE CONFIGURATION SWITCH SETTINGS ON ADDRESSABLE A/V DEVICES (CFIG1). REFER TO DEVICE DETAILS AND INSTALLATION INSTRUCTIONS FOR MORE INFORMATION.
4. THE DEVICE ADDRESSES INDICATED ON THESE DRAWINGS ARE AN ALPHANUMERIC DESCRIPTION OF WHICH CIRCUIT THE DEVICE IS LOCATED ON. DEVICES MAY BE ASSIGNED A DIFFERENT NUMBER WITHIN THE PANEL PROGRAM. CONSULT WITH A JOHNSON CONTROLS TECHNICIAN BEFORE APPLYING A PHYSICAL LABEL TO ANY DEVICES.
5. THE INFORMATION OR SYMBOLS SHOWN IN BOLD LINETYPE ARE NEW OR RELOCATED.
6. THE INFORMATION OR SYMBOLS SHOWN IN LIGHT LINETYPE ARE EXISTING.

KEYNOTES:

1. REPLACE EXISTING PHOTO SENSOR WITH NEW HEAT SENSOR IN EXISTING BASE. SENSOR AND BASE WILL BE REMOVED AFTER ALL CONSTRUCTION CLEANUP IS COMPLETED.
2. EXISTING CHIME STROBE TO BE RELOCATED TO NON-DEMOLISHED WALL IF NECESSARY AND IS TO REMAIN DURING CONSTRUCTION. DEVICE WILL BE REMOVED AFTER ALL CONSTRUCTION CLEANUP IS COMPLETED.
3. EXISTING RESISTOR TO BE RELOCATED. AFTER CONSTRUCTION RELOCATED RESISTOR TO PREVIOUS DEVICE ON CIRCUIT TO MAINTAIN SUPERVISION.
4. WIRE NEW EXPANSION POWER REPEATER TO EXISTING ADDRESSABLE VISUAL N1:T4:A2:1-24 IN RADIOLOGY 03 CHANGING ROOM.
5. ALL WIRING INTO AREA WILL BE WIRED INTO THE NEW TERMINAL CABINET PRIOR TO WIRING IN THE MRI.
6. DEVICE TO BE FIELD LOCATED OUTSIDE THE NEW MRI BY ASSOCIATED INSTALLED OR CONTRACTOR.
7. ALL INTERIOR MRI ROOM CABLING TO ENTER THROUGH MRI FILTER PANEL.

Johnson Controls
DISTRICT - 419
14200 E. EXPOSITION AVE
AURORA, CO 80012
SERVICE: 303-355-0500
PHONE: 303-355-0500
FAX: 303-355-0615

NICET CERTIFICATION INFORMATION
NANCY S. WILTSIE
NICET Fire Alarm, III
Certification #93727
Valid Through: 03/01/24
March 24,2021

THE MEDICAL CENTER OF AURORA NEW MRI

THE MEDICAL CENTER OF AURORA
1501 SOUTH POTOMAC STREET
AURORA, COLORADO 80012

ISSUE LOG: Revisions shown with △ symbol

MARK	DATE	CAD	CHK	DESCRIPTION
3	03/23/2021	CBR	NSW	PER CITY AND STATE COMMENTS DATED 03/10/2021 THROUGH 03/17/2021
2	03/04/2021	NSW	JRE	REMOVE DUCT DETECTORS FROM GENERAL ALARM
1	02/26/2021	NSW	JRE	PER AHJ COMMENTS DATED 02/26/2021

FOR PERMIT

DRAWN BY:	CBR
CHECKED BY:	NSW
ISSUE DATE:	2/21/21
JOB #:	
PROJECT #:	419:619975503

JOHNSON CONTROLS © 2021

SYSTEM: FIRE ALARM SYSTEM

SHEET: 1ST FLOOR PARTIAL DEVICE PLACEMENT PLAN & INTERIM RISER DIAGRAM

FA-101

Audible/Visual occupant notification device spacing shall be field verified for compliance in Public Use/Common Use Areas. Exam rooms and shared offices are examples of Public Use/ Common Use Areas. 2015 IFC 907.5

City of Aurora Building Division
Reviewed for Code Compliance
By: M. Apodaca
Date: March 25, 2021
2015 INTERNATIONAL CODES & 2020 NEC

FILE PATH: C:\Users\jrauchc\Johnson Controls\Project Electronics - 1501 S Potomac - Aurora South\South Tower - Node 1\28-MRI - 2021 - 619975503\Fire\FA-101.dwg
LAST SAVED BY: JRAUCHC
LAST PRINTED: 3/24/2021 11:51:55 AM
30" x 42" - Arch E1 Size

© Johnson Controls 2021. All rights reserved. Reuse, copying, modification or alteration of the drawings and other information contained herein is strictly prohibited.

RSN: 1523729
Permit # 2021-1939814-LT
Sheet 3 of 51

PARTIAL RISER DIAGRAM

SCALE:N.T.S.

RISER NOTES:

1. RISER IS A DIAGRAMMATICAL REPRESENTATION OF THE SYSTEM ARCHITECTURE IN BUILDING CROSS SECTION. IT IS NOT INTENDED TO REPRESENT ACTUAL WIRE RUNS, PANEL CONFIGURATIONS OR PENETRATIONS. REFER TO FLOOR PLANS AND PANEL DETAILS FOR CIRCUIT ROUTING AND CONFIGURATION INFORMATION.
2. ALL WIRING SHALL COMPLY WITH APPLICABLE ELECTRICAL CODES. REFER TO "APPLICABLE CODES & STANDARDS" ON SHEET FA-001 FOR SPECIFIC CODE REFERENCES.
3. THE INFORMATION OR SYMBOLS SHOWN IN BOLD LINETYPE ARE NEW OR RELOCATED.
4. THE INFORMATION OR SYMBOLS SHOWN IN LIGHT LINETYPE ARE EXISTING.

KEYED NOTES:

1. 120VAC PRIMARY POWER SOURCE SHALL BE A MECHANICALLY PROTECTED BRANCH CIRCUIT. THE CIRCUIT DISCONNECTING MEANS SHALL HAVE A RED MARKING, AND BE IDENTIFIED AS "FIRE ALARM CIRCUIT"

Johnson Controls
DISTRICT 1-418
10600 E. ARAPAHOE ROAD
AURORA, CO 80012
SERVICE: 303-355-6000
PHONE: 303-350-6500
FAX: 303-355-6615

NICET CERTIFICATION INFORMATION

NANCY S. WILTSIE
NICET Fire Alarm, III
Certification #93727
Valid Through: 03/01/24

March 24,2021

THE MEDICAL CENTER OF AURORA
NEW MRI

THE MEDICAL CENTER OF AURORA
1501 SOUTH POTOMAC STREET
AURORA, COLORADO 80012

Revisions shown with Δ symbol

ISSUE LOC:	DATE:	CAD:	CHK:	DESCRIPTION
MARK:				
3	05/07/2021	NSW	JRE	PER CITY OF AURORA FIRE COMMENTS DATED 03/10/2021 THROUGH 03/17/2021
2	03/04/2021	NSW	JRE	REMOVE DUCT DETECTORS FROM GENERAL ALARM
1	02/25/2021	NSW	JRE	PER AHJ COMMENTS DATED 02/25/2021

FOR PERMIT

DRAWN BY:	CBR
CHECKED BY:	NSW
ISSUE DATE:	2/21/21
JOB #:	
PROJECT #:	419-619975503

JOHNSON CONTROLS © 2021

SYSTEM: FIRE ALARM SYSTEM

SHEET: PARTIAL RISER DIAGRAM

FA-201

City of Aurora Building Division
Reviewed for Code Compliance
By: *M. Apodaca*
Date: *March 25, 2021*
2015 INTERNATIONAL CODES & 2020 NEC

FILE PATH: C:\Users\jrpatch\Johnson Controls\Project Electronics - 1501 S Potomac - Aurora South\South Tower - Node 1\2B.MRI - 2021 - 619975503\FireFA-201 PARTIAL RISER DIAGRAM.dwg
LAST SAVED BY: JRANCHC
LAST PRINTED: 3/24/2021 11:52:02 AM
30" x 42" Arch E1 Size

© Johnson Controls 2021. All rights reserved. Reuse, copying, modification or alteration of the drawings and other information contained herein is strictly prohibited.

RSN: 1523729
Permit # 2021-1939814-LT
Sheet 4 of 51

MEDICAL CENTER OF AURORA SOUTH TOWER NODE 1 FACP 4100es FACP

Module	Qty	Description	Setting	Standby Current	Total Standby	Alarm Current	Total Alarm
Panel Equipment							
4100-7150	*1*	*MASTER CONTROLLER UPGRADE W/ 2X40 DISPLAY (4100 BA*		*0.1630*	*0.1630*	*0.2100*	*0.2100*
4100-0304	*1*	*STYLE 7 REMOTE UNIT INTERFACE*		*0.0850*	*0.0850*	*0.0850*	*0.0850*
4100-5005	*8*	*ZONE MODULE, 8 IDC, CLASS B*		*0.0750*	*0.6000*	*0.1950*	*1.5600*
4100-3003	*2*	*8 PT AUX RELAY MODULE 3 AMP*		*0.0250*	*0.0500*	*0.2800*	*0.5600*
4100-0110	*5*	*MAPNET II ADDRESSABLE MODULE*	*	*0.2700*	*1.3500*	*0.2900*	*1.4500*
4100-4321	*10*	*6 CIRCUIT CLASS B (STYLE Y)*		*0.0250*	*0.2500*	*0.0700*	*0.7000*
4100-6078	*1*	*NETWORK IF CARD, MODULAR*		*0.0460*	*0.0460*	*0.0460*	*0.0460*
4100-6056	*2*	*NETWORK MEDIA CARD WIRED*		*0.0550*	*0.1100*	*0.0550*	*0.1100*
4100-5101	*2*	*EXPANSION PWR SUPPLY (XPS) - 120VAC 60HZ*		*0.0500*	*0.1000*	*0.0500*	*0.1000*
4100-6038	*1*	*DUAL RS-232 IF CARD*		*0.1320*	*0.1320*	*0.1320*	*0.1320*
4100-6005	*2*	*MASTER CONTROLLER POWER SUPPLY*		*0.0000*	*0.0000*	*0.0000*	*0.0000*
4100-3110	*3*	*IDNet2+2 MODULE - UP TO 250 DEVICES 4 ISOLATED LOOPS*	*	*0.0500*	*0.1500*	*0.1000*	*0.3000*
4100-0108	*1*	*EXPANSION 120V 8AMP POWER SUPPLY*		*0.0000*	*0.0000*	*0.0000*	*0.0000*
4100-96xx	*4*	*REMOTE ANNUNCIATORS & MINIPLEX TRANSPONDERS*	*	*RUI CURRENT DRAWS INCLUDED BELOW*			
		Panel Totals			**3.0360**		**5.2530**
IDNet Addressable Devices (SLC)							
4090-9001	*7*	*IDNET SUPERVISED IAM*	*	*Constant current draw of .8mA standby and 1mA alarm per address used. Devices requiring additional current are accounted for in the section labeled "Miscellaneous Peripheral Devices Requiring Additional System Power".*			
4090-9002	*1*	*IDNET RELAY IAM*	*				
4098-9714	**22**	**TRUEALARM PHOTO SMOKE SENSOR**					
4098-9733	**8**	**TRUEALARM HEAT SENSOR**	*				
4098-9756	*2*	*TRUEALARM DUCT SMOKE SENSOR W/ RELAY OUTPUT*	*				
4098-9789	*1*	*TRUEALARM SENSOR BASE W/ LED OUTPUT*	*				
4098-9792	**29**	**TRUEALARM SENSOR BASE**	*				
4099-9006	*10*	*ADDRESSABLE DOUBLE ACTION MANUAL STATION, PUSH*	*				
Mapnet Addressable Devices (SLC)							
2190-9155	*1*	*MAPNET CLASS B MONITOR ZAM*	*				
2190-9161	*6*	*MAPNET CLASS B SIGNAL ZAM*	*				
2190-9163	*44*	*MAPNET UNSUPERVISED CONTROL ZAM*	*				
2190-9172	*41*	*MAPNET SUPERVISED IAM*	*				
2190-9173	*3*	*MAPNET 2 POINT INPUT/OUTPUT ZAM*	*				
2099-9795	*22*	*MAPNET SINGLE ACTION PULL STATION*	*				
4098-9714	*338*	*TRUEALARM PHOTO SMOKE SENSOR*					
4098-9733	*36*	*TRUEALARM HEAT SENSOR*	*				
4098-9756	*37*	*TRUEALARM DUCT SMOKE SENSOR W/ RELAY OUTPUT*	*				
4098-9789	*335*	*TRUEALARM SENSOR BASE W/ LED OUTPUT*	*				
4098-9792	*39*	*TRUEALARM SENSOR BASE*	*				
Miscellaneous Peripheral Devices That Require (Additional) System Power							
4098-9843	*39*	*ENCAPSULATED RELAY PAM-SD*		*0.0000*	*0.0000*	*0.0150*	*0.5850*
4098-9756	*39*	*TRUEALARM DUCT SMOKE SENSOR W/ RELAY OUTPUT*		*0.0030*	*0.1170*	*0.0150*	*0.5850*
4603-9101	*11*	*SERIAL LCD ANNUNCIATOR*		*0.0650*	*0.7150*	*0.1400*	*1.5400*
2098-9808	*1*	*REMOTE ALARM INDICATOR*		*0.0000*	*0.0000*	*0.0000*	*0.0000*
Notification Appliances			**Setting**				
4009-9001	*2*	*FOUR CIRCUIT NAC EXTENDER, 120 VAC*		*0.0000*	*0.0000*	*0.0150*	*0.0300*
4903-9219	*10*	*HORN/STROBE NON-SYNC, RED*	*15*	*0.0000*	*0.0000*	*0.1330*	*1.3300*
4903-9292	**102**	**CH70-2415W-FR 15CD CHIME/STROBE**	**15**	**0.0000**	**0.0000**	**0.0700**	**7.1400**
4904-9137	**114**	**15CD VISIBLE ONLY RED**	**15**	**0.0000**	**0.0000**	**0.0900**	**10.2600**
4906-9101	*1*	*V/O MC NON-ADDRESS, RED, WALL*	*15*	*0.0000*	*0.0000*	*0.0600*	*0.0600*
4906-9101	*8*	*V/O MC NON-ADDRESS, RED, WALL*	*75*	*0.0000*	*0.0000*	*0.1860*	*1.4880*
CH70-24MCW-FR	*4*	*MULTI CD CHIME STROBE, WALL MNT, RED*	*15*	*0.0000*	*0.0000*	*0.0820*	*0.3280*
RSS-24MCW-FR	*1*	*MULTI CD STROBE, WALL MNT, RED*	*15*	*0.0000*	*0.0000*	*0.0600*	*0.0600*
		Peripheral Totals			**0.8320**		**23.4060**
		RUI Totals	**15**		**0.0525**		**0.0525**
		Address Totals	**601.5 Addresses**		**0.9776**		**0.9876**
		System Totals*:		**Standby**	**4.8981**	**Alarm**	**29.6991**

*** Device Address current draw included below (See Additional Current Draws):**
1. 2-wire detector alarm current is included in the alarm current of the Initiating Device Circuit.

Battery Set #1 (Cabinet/Charger #1)			**Standby Current**	**Standby Total**	**Alarm Current**	**Alarm Total**
Select ALL Power Supplies on this battery set:						
PS-1				0.9640		8.8500
PS-2				1.3320		8.9430
PS-3				0.7310		8.9960
XPS-1				0.1560		0.3100
XPS-2				0.6850		1.5600
			Sub Total	**3.8680**		**28.6590**
Additional Current Draws:						
RUI Connected Peripheral Devices		15	x 0.0035	= 0.0525	x 0.0035	= 0.0525
MAPNET/IDNet Device Address Communication Current		602	x 0.001625	= 0.9776	x 0.001642	= 0.9876
			Sub Total	**4.8981**		**29.6991**
Spare addressable point capacity	**20%**	121	x 0.001625	= 0.1966	x 0.001642	= 0.1987
			Total	**5.0947**		**29.8978**
Standby Time =	4 Hrs		x 5.0947	= 20.3788	Standby Ah	
Alarm Time =	5 Min		0.08333 x 29.8978	= 2.4915	Alarm Ah	
				22.8703		
Additional Spare Battery Capacity =	**20%**		+	4.5741		
				27.4443		
Battery Discharge Factor =	**20%**		+	5.4889		
Minimum Battery Required	**2081-9276 33AH (2x)**			**32.9332**		
Battery Supplied	**2081-9296 50AH (2x)**					

*** System Totals represent total system current requirements. Those currents may be distributed between multiple battery sets or power supplies as shown above.**

△3 ***EXISTING FIRE ALARM PANEL IS CONNECTED TO A DEDICATED CIRCUIT FROM THE GENERATOR. BUILDING IS NON-VOICE.***

Please verify that the generator will provide secondary power within 10 seconds.

MAPNET CHANNEL M1

Keynote	Address	Device Type	Point Type	Location Description	1	2	3	4	5	6	7	8		9
	M1-1	*ADRPUL*	*PULL*	*1:M1-1 FLR 1 W - EXIT BY X-RAY WAITING*	X								ON	
	M1-2	*ADRPUL*	*PULL*	*1:M1-2 FLR 1W - EXIT HALL BY NUCLEAR MED*		X							ON	
	M1-3	*ADRPUL*	*PULL*	*1:M1-3 FLR 1W - EXIT BY INTERVENTIONAL*	X	X							ON	
	M1-4	*ADRPUL*	*PULL*	*1:M1-4 FLR 1 CENTRAL TWR EXIT BY MRI*			X						ON	
	M1-5	*RPHOTO*	*SDUCT*	*1:M1-5 X-RAY ROOF - AHU-97-9 DUCT D.*	X		X						ON	
	M1-6	*RPHOTO*	*SDUCT*	*1:M1-6 X-RAY ROOF - AHU-97-9 DUCT D*		X	X						ON	
	M1-7	*RPHOTO*	*SDUCT*	*1:M1-7 X-RAY ROOF - AHU-97-14 DUCT D*	X	X	X						ON	
	M1-8	*RPHOTO*	*SDUCT*	*1:M1-8 X-RAY ROOF - AHU-97-14 DUCT D.*				X					ON	
	M1-9	*RPHOTO*	*SDUCT*	*1:M1-9 X-RAY ROOF - AHU-97-15 DUCT D.*	X			X					ON	
	M1-10	*RPHOTO*	*SDUCT*	*1:M1-10 X-RAY ROOF - AHU-15 DUCT DET.*		X		X					ON	
	M1-11	*GENIAM*	*SO*	*1:M1-11 FLR 1 CENTRAL TWR X-RAY HALL*	X	X		X					ON	
	M1-12	*RZAM*	*RELAY*	*1:M1-12 X-RAY ROOF - AHU-97-9 DOWN*			X	X					ON	
	M1-13	*RZAM*	*RELAY*	*1:M1-13 X-RAY ROOF AHU 97-14 SHUTDOWN*	X		X	X					ON	
	M1-14	*RZAM*	*RELAY*	*1:M1-14 X-RAY ROOF AHU 97-15 SHUTDOWN*		X	X	X					ON	
	M1-15	*PHOTO*	*VSMOKE*	*1:M1-15 FLR 1W - HALL BY X-RAY WAITING*	X	X	X	X					ON	
	M1-16	*PHOTO*	*VSMOKE*	*1:M1-16 FLR 1W - X-RAY - PET SCAN*					X				ON	
	M1-17	*PHOTO*	*VSMOKE*	*1:M1-17 FLR 1W - X-RAY - PET SCAN*	X				X				ON	
	M1-18	*PHOTO*	*VSMOKE*	*1:M1-18 FLR 1W - HALL BY X-RAY WAITING*		X			X				ON	
	M1-19	*PHOTO*	*VSMOKE*	*1:M1-19 FLR 1W - HALL BY X-RAY WAITING*	X	X			X				ON	
	M1-20	*PHOTO*	*VSMOKE*	*1:M1-20 FLR 1W - X-RAY WAITNG RM*			X		X				ON	
	M1-21	*PHOTO*	*VSMOKE*	*1:M1-21 FLR 1W - HALL BY X-RAY WAITING*	X		X		X				ON	
	M1-22	*PHOTO*	*VSMOKE*	*1:M1-22 FLR 1W - HALL BY X-RAY WAITING*		X	X		X				ON	
	M1-23	*PHOTO*	*VSMOKE*	*1:M1-23 FLR 1W - BY PATHOLOGY STAIRS*	X	X	X		X				ON	
	M1-24	*PHOTO*	*VSMOKE*	*1:M1-24 FLR 1W - HALL BY PATHOLOGY*				X	X				ON	
	M1-25	*PHOTO*	*VSMOKE*	*1:M1-25 FLR 1W - HALL BY PATHOLOGY*	X			X	X				ON	
	M1-26	*PHOTO*	*VSMOKE*	*1:M1-25 FLR 1W - HALL BY PATHOLOGY*		X		X	X				ON	
	M1-27			*SPARE*	X	X		X	X				ON	
	M1-28			*SPARE*			X	X	X				ON	
	M1-29			*SPARE*	X		X	X	X				ON	
	M1-30			*SPARE*		X	X	X	X				ON	
	M1-31			*SPARE*	X	X	X	X	X				ON	
	M1-32			*SPARE*						X			ON	
	M1-33			*SPARE*	X					X			ON	
	M1-34			*SPARE*		X				X			ON	
	M1-35			*SPARE*	X	X				X			ON	
	M1-36	*PHOTO*	*VSMOKE*	*1:M1-36 FLR 1W - PATHOLOGY LAB*			X			X			ON	
	M1-37	*PHOTO*	*VSMOKE*	*1:M1-37 FLR 1W - ULTRASOUND SUITE*	X		X			X			ON	
	M1-38	*PHOTO*	*VSMOKE*	*1:M1-38 FLR 1W - ULTRASOUND SUITE*		X	X			X			ON	
	M1-39	*PHOTO*	*VSMOKE*	*1:M1-39 FLR 1W - HALL BY X-RAY WAITING*	X	X	X			X			ON	
	M1-40	*PHOTO*	*VSMOKE*	*1:M1-40 FLR 1W - HALL BY X-RAY OFFICES*				X		X			ON	
	M1-41	*PHOTO*	*VSMOKE*	*1:M1-41 FLR 1W - X-RAY WAITNG RM*	X			X		X			ON	
	M1-42	*PHOTO*	*VSMOKE*	*1:M1-42 FLR 1W - X-RAY OFFICE SUITE*		X		X		X			ON	
	M1-43	*PHOTO*	*VSMOKE*	*1:M1-43 FLR 1W - X-RAY OFFICE SUITE*	X	X		X		X			ON	
	M1-44	*PHOTO*	*VSMOKE*	*1:M1-44 FLR 1W - X-RAY OFFICE SUITE*			X	X		X			ON	
	M1-45	*PHOTO*	*VSMOKE*	*1:M1-45 FLR 1W - HALL BY X-RAY OFFICES*	X		X	X		X			ON	
	M1-46	*PHOTO*	*VSMOKE*	*1:M1-46 FLR 1W - HALL BY X-RAY OFFICES*		X	X	X		X			ON	
	M1-47	*PHOTO*	*VSMOKE*	*1:M1-47 FLR 1W - HALL BY NUCLEAR MED*	X	X	X	X		X			ON	
	M1-48	*PHOTO*	*VSMOKE*	*1:M1-48 FLR 1W - HALL BY NUCLEAR MED*					X	X			ON	
	M1-49	*PHOTO*	*VSMOKE*	*1:M1-49 FLR 1W - HALL BY NUCLEAR MED*	X				X	X			ON	
	M1-50	*PHOTO*	*VSMOKE*	*1:M1-50 FLR 1W - NUCLEAR MEDICINE*		X			X	X			ON	
	M1-51	*PHOTO*	*VSMOKE*	*1:M1-51 FLR 1W - NUCLEAR MEDICINE*	X	X			X	X			ON	
	M1-52	*PHOTO*	*VSMOKE*	*1:M1-52 FLR 1W - NUCLEAR MED HOT LAB*			X		X	X			ON	
	M1-53	*PHOTO*	*VSMOKE*	*1:M1-53 FLR 1W - HALL BY NUCLEAR MED*	X		X		X	X			ON	
	M1-54	*PHOTO*	*VSMOKE*	*1:M1-54 FLR 1W - EXIT HALL BY X-RAY 4*		X	X		X	X			ON	
	M1-55	*PHOTO*	*VSMOKE*	*1:M1-55 FLR 1W - EXIT HALL BY X-RAY 3*	X	X	X		X	X			ON	
	M1-56	*PHOTO*	*VSMOKE*	*1:M1-56 FLR 1W - INTER-HALL BY X-RAY 3*				X	X	X			ON	
	M1-57	*PHOTO*	*VSMOKE*	*1:M1-57 FLR 1W - INTER-HALL BY X-RAY 3*	X			X	X	X			ON	
	M1-58	*PHOTO*	*VSMOKE*	*1:M1-58 FLR 1W - INTER-HALL BY X-RAY 3*		X		X	X	X			ON	
	M1-59	*PHOTO*	*VSMOKE*	*1:M1-59 FLR 1W - INTER-HALL BY X-RAY 4*	X	X		X	X	X			ON	
	M1-60	*PHOTO*	*VSMOKE*	*1:M1-60 FLR 1W - HALL BY CAT SCAN*			X	X	X	X			ON	
	M1-61	*PHOTO*	*VSMOKE*	*1:M1-61 FLR 1W - HALL BY CAT SCAN*	X		X	X	X	X			ON	
	M1-62	*PHOTO*	*VSMOKE*	*1:M1-62 FLR 1W - HALL BY CAT SCAN*		X	X	X	X	X			ON	
	M1-63	*PHOTO*	*VSMOKE*	*1:M1-63 FLR 1W - CAT SCAN SUITE*	X	X	X	X	X	X			ON	
	M1-64	*PHOTO*	*VSMOKE*	*1:M1-64 FLR 1W - HALL BY CAT SCAN*							X		ON	
2	**M1-65**			**SPARE**	X						X		ON	
1	**M1-66**	**HEAT**	**HEAT**	**INTERIM**		X					X		ON	
1	**M1-67**	**HEAT**	**HEAT**	**INTERIM**	X	X					X		ON	
1	**M1-68**	**HEAT**	**HEAT**	**INTERIM**			X				X		ON	
	M1-69	*PHOTO*	*VSMOKE*	*1:M1-69 FLR 1W - HALL BY X-RAY LOUNGE*	X		X				X		ON	
	M1-70	*PHOTO*	*VSMOKE*	*1:M1-70 FLR 1W - HALL BY INTERVENTIONAL*		X	X				X		ON	
	M1-71	*ADRPUL*	*PULL*	*1:M1-71 FL 1 CENTRL TWR MRI NRS STATION*	X	X	X				X		ON	
	M1-72			*SPARE*				X			X		ON	
	M1-73	*RZAM*	*RELAY*	*1:M1-73 1ST FL ROLL UP DOOR*	X			X			X		ON	
	M1-74	*PHOTO*	*VSMOKE*	*1:M1-74 FLR 1W - HALL BY INTERVENTIONAL*		X		X			X		ON	
	M1-75	*PHOTO*	*VSMOKE*	*1:M1-75 FLR 1W - INTERVENTIONAL X-RAY*	X	X		X			X		ON	
	M1-76	*PHOTO*	*VSMOKE*	*1:M1-76 FLR 1W - HALL BY INTERVENTIONAL*			X	X			X		ON	
	M1-77	*PHOTO*	*VSMOKE*	*1:M1-77 FLR 1W - HALL BY INTERVENTIONAL*	X		X	X			X		ON	
	M1-78	*PHOTO*	*VSMOKE*	*1:M1-78 FLR 1W - INTERVENTIONAL RM 3*		X	X	X			X		ON	
	M1-79	*PHOTO*	*VSMOKE*	*1:M1-79 FLR 1 - INTERVENTIONAL EQUIP. RM*	X	X	X	X			X		ON	
	M1-80	*PHOTO*	*VSMOKE*	*1:M1-80 FLR 1W - INTERVENTIONAL X-RAY*					X		X		ON	
	M1-81	*PHOTO*	*VSMOKE*	*1:M1-81 FLR 1W - INTERVENTIONAL X-RAY*	X				X		X		ON	
	M1-82	*PHOTO*	*VSMOKE*	*1:M1-82 FLR 1W - INTERVENTIONAL X-RAY*		X			X		X		ON	
	M1-83	*PHOTO*	*VSMOKE*	*1:M1-83 FLR 1W - HALL BY MRI EQUIP. RM*	X	X			X		X		ON	
	M1-84	*PHOTO*	*VSMOKE*	*1:M1-84 FLR 1W - HALL BY MRI EQUIP. RM*			X		X		X		ON	
	M1-85			*SPARE*	X		X		X		X		ON	
	M1-86			*SPARE*		X	X		X		X		ON	
	M1-87			*SPARE*	X	X	X		X		X		ON	
	M1-88			*SPARE*				X	X		X		ON	
	M1-89	*PHOTO*	*VSMOKE*	*1:M1-89 FLR 1W - HALL BY MRI*	X			X	X		X		ON	
	M1-90	*PHOTO*	*VSMOKE*	*1:M1-90 FLR 1W - HALL BY MRI*		X		X	X		X		ON	
	M1-91	*PHOTO*	*VSMOKE*	*1:M1-91 FLR 1W - X-RAY - PET SCAN*	X	X		X	X		X		ON	
	M1-92			*SPARE*			X	X	X		X		ON	
	M1-93	*GENIAM*	*SO*	*1:M1-93 1ST FL PHARMACY SUPPLY TAMPER*	X		X	X	X		X		ON	
	M1-94	*GENIAM*	*WATER*	*1:M1-94 FLR 1W - BLOOD BANK FLOW*		X	X	X	X		X		ON	
	M1-95	*MBZAM*	*HEAT*	*1:M1-95 FLR 1W - MRI SCANNER ROOM*	X	X	X	X	X		X		ON	
	M1-96	*PHOTO*	*VSMOKE*	*1:M1-96 FLR 1W - MRI CONTROL RM*						X	X		ON	
	M1-97	*PHOTO*	*VSMOKE*	*1:M1-97 FLR 1W - MRI SUITE*	X					X	X		ON	
	M1-98	*PHOTO*	*VSMOKE*	*1:M1-98 FLR 1W - MRI EQUIPMENT RM*		X				X	X		ON	
	M1-99	*PHOTO*	*VSMOKE*	*1:M1-99 FLR 1W - INTERVENTIONAL X-RAY*	X	X				X	X		ON	
	M1-100	*PHOTO*	*VSMOKE*	*1:M1-100 FLR 1W - INTERVENTIONAL BAY 2*			X			X	X		ON	
	M1-101	*PHOTO*	*VSMOKE*	*1:M1-101 FLR 1W - INTERVENTIONAL BAY 1*	X		X			X	X		ON	
	M1-102	*PHOTO*	*VSMOKE*	*1:M1-102 FLR 1W - INTERVENTIONAL N.STAT.*		X	X			X	X		ON	
	M1-103	*RPHOTO*	*SDUCT*	*1:M1-103 FLR 1W - HALL BY INTERVENTIONAL*	X	X	X			X	X		ON	
	M1-104			*SPARE*				X		X	X		ON	
	M1-105			*SPARE*	X			X		X	X		ON	
	M1-106	*PHOTO*	*VSMOKE*	*1:M1-106 FLR 1W - ELECTRIC RM BY LAB*		X		X		X	X		ON	
	M1-107	*PHOTO*	*VSMOKE*	*1:M1-107 FLR 1 W - OR STORAGE*	X	X		X		X	X		ON	
	M1-108			*SPARE*			X	X		X	X		ON	
	M1-109			*SPARE*	X		X	X		X	X		ON	
	M1-110			*SPARE*		X	X	X		X	X		ON	
	M1-111			*SPARE*	X	X	X	X		X	X		ON	
	M1-112			*SPARE*					X	X	X		ON	
	M1-113			*SPARE*	X				X	X	X		ON	
	M1-114			*SPARE*		X			X	X	X		ON	
	M1-115	*PHOTO*	*VSMOKE*	*1:M1-115 FLR 1 RADI. 03 CHANGING AREA*	X	X			X	X	X		ON	
	M1-116			*SPARE*			X		X	X	X		ON	
	M1-117			*SPARE*	X		X		X	X	X		ON	
1	**M1-118**	**HEAT**	**HEAT**	**INTERIM**		X	X		X	X	X		ON	
	M1-119			*SPARE*	X	X	X		X	X	X		ON	
	M1-120			*SPARE*				X	X	X	X		ON	
	M1-121			*SPARE*	X			X	X	X	X		ON	
	M1-122			*SPARE*		X		X	X	X	X		ON	
	M1-123			*SPARE*	X	X		X	X	X	X		ON	
	M1-124			*SPARE*			X	X	X	X	X		ON	
	M1-125			*SPARE*	X		X	X	X	X	X		ON	
	M1-126			*SPARE*		X	X	X	X	X	X		ON	
	M1-127			*SPARE*	X	X	X	X	X	X	X		ON	

NOTE: THE LABELS SHOWN ABOVE WILL BE USED FOR PROGRAMMING PURPOSES.
THE LABELS ARE BASED UPON INFORMATION SHOWN ON THE ARCHITECTURAL DRAWINGS.
ANY CHANGES TO THESE LABELS MUST BE NOTED ON THE SUBMITTAL REVIEW, PRIOR TO PROGRAMMING.
POINTS SHOWN IN ITALIC TEXT REFER TO EXISTING DEVICES.

GENERAL NOTES:

1. THE INFORMATION OR SYMBOLS SHOWN IN BOLD LINETYPE ARE NEW OR RELOCATED.
2. THE INFORMATION OR SYMBOLS SHOWN IN LIGHT LINETYPE ARE EXISTING.

KEYNOTES:

1. INTERIM DEVICE FOR CONSTRUCTION. TO BE REMOVED AFTER CONSTRUCTION IS COMPLETE.
2. DEVICE REMOVED PER CONSTRUCTION.
3. DEVICE RELOCATED.

City of Aurora Building Division
Reviewed for Code Compliance
By: M. Apodaca
Date: March 25, 2021
2015 INTERNATIONAL CODES & 2020 NEC

Johnson Controls
DISTRICT - 419
14200 E. EXPOSITION AVE
AURORA, CO 80012
SERVICE: 303-355-0500
PHONE: 303-355-0500
FAX: 303-355-0615

NICET CERTIFICATION INFORMATION
NANCY S. WILTSIE
NICET Fire Alarm, III
Certification #93727
Valid Through: 03/01/24
Nancy S Wiltsie
March 24,2021

THE MEDICAL CENTER OF AURORA NEW MRI

THE MEDICAL CENTER OF AURORA
1501 SOUTH POTOMAC STREET
AURORA, COLORADO 80012

ISSUE LOG: Revisions shown with △ symbol

MARK	DATE	CAD	CHK	DESCRIPTION
3	03/23/2021	CBR	NSW	PER CITY AND STATE COMMENTS DATED 03/10/2021 THROUGH 03/17/2021
2	03/04/2021	NSW	JRE	REMOVE DUCT DETECTORS FROM GENERAL ALARM
1	02/26/2021	NSW	JRE	PER AHJ COMMENTS DATED 02/26/2021

FOR PERMIT

DRAWN BY:	CBR
CHECKED BY:	NSW
ISSUE DATE:	2/21/21
JOB #:	
PROJECT #:	419:619975503

JOHNSON CONTROLS © 2021

SYSTEM: **FIRE ALARM SYSTEM**

SHEET: **FIRE ALARM CONTROL PANEL INTERIM CALCULATIONS & SCHEDULES**

FA-601

FILE PATH: C:\Users\jrauchc\Johnson Controls\Project Electronics - 1501 S Potomac - Aurora South\South Tower - Node 1\28-MRI - 2021 - 619975503\Fire\FA-601.dwg
LAST SAVED BY: JRAUCHC
LAST PRINTED: 3/24/2021 11:52:06 AM
30" x 42" - Arch E1 Size

© Johnson Controls 2021. All rights reserved. Reuse, copying, modification or alteration of the drawings and other information contained herein is strictly prohibited.

GENERAL NOTES:

1. THE INFORMATION OR SYMBOLS SHOWN IN BOLD LINETYPE ARE NEW OR RELOCATED.
2. THE INFORMATION OR SYMBOLS SHOWN IN LIGHT LINETYPE ARE EXISTING.

KEYNOTES:

1. INTERIM DEVICE FOR CONSTRUCTION. TO BE REMOVED AFTER CONSTRUCTION IS COMPLETE.
2. DEVICE REMOVED PER CONSTRUCTION.
3. DEVICE RELOCATED.

MEDICAL CENTER OF AURORA SOUTH TOWER NODE 1 FACP 4100es FACP VOLTAGE DROPS

WIRE RESISTANCE BASED ON TABLE 8 FROM NATIONAL ELECTRICAL CODE (UNCOATED SOLID COPPER WIRE) @ 75 Celsius

NOTIFICATION CIRCUIT DESCRIPTION	Power Supply	Panel Circuit	Plan Ckt.	Dist. (D) Feet	Wire Gauge	Wire Res. / Ft. (R)	Total Alarm (A)	V. Drop (A*2D*R)	Volt @ End	% Volt Drop	Min Device Voltage	Max Distance	4903-9219	4903-9292 (keynotes 3, 1)	4904-9137 (keynote 2)	CH70-24MCW-FR	RSS-24MCW-FR	4906-9101	4906-9101	4009-9001	Circuit Capacity (Amps)	Minimum Voltage @ NAC Output Terminals	Spare Circuit / Branch Capacity	Device Quantity Per Circuit/ Branch
												Setting	15cd	15cd	15cd	15cd	15cd	15cd	75cd					
												Device Type	A/V	C/V	V/O	MC A/V	MC V/O	MC V/O	MC V/O					
												Supv. Current	0.0000	0.0000	0.0000	0.0000	0.0000	0.0000	0.0000	0.0000				
												Alarm Current	0.1330	0.0700	0.0900	0.0820	0.0600	0.0600	0.1860	0.0150				
												Alarm Current @ 23 Volts	0.1330	0.0700	0.0900	0.0820	0.0600	0.0600	0.1860	0.0150				
1ST FLOOR EAST CHIMES/STROBES N1:SIG3	PS-1	SIG3	1:SIG3	500	14ga	0.0031	0.450	1.382	18.119	7.08%	16vdc	1267 Ft.			5						3.A	19.5	60.5%	5
RADIOLOGY/SURGERY HALLS N1:SIG4	PS-1	SIG4	1:SIG4	500	14ga	0.0031	0.450	1.382	18.119	7.08%	16vdc	1267 Ft.			5						3.A	19.5	60.5%	5
2ND FLOOR CHIMES/STROBES N1:SIG5	PS-1	SIG5	1:SIG5	600	14ga	0.0031	0.450	1.658	17.842	8.50%	16vdc	1267 Ft.			5						3.A	19.5	52.6%	5
3RD FLOOR CHIMES/STROBES N1:SIG6	PS-1	SIG6	1:SIG6	700	14ga	0.0031	0.450	1.934	17.566	9.92%	16vdc	1267 Ft.			5						3.A	19.5	44.7%	5
4TH FLOOR CHIMES/STROBES N1:SIG7	PS-1	SIG7	1:SIG7	800	14ga	0.0031	0.450	2.210	17.290	11.34%	16vdc	1267 Ft.			5						3.A	19.5	36.8%	5
5TH FLOOR CHIMES/STROBES N1:SIG8	PS-1	SIG8	1:SIG8	900	14ga	0.0031	0.450	2.487	17.013	12.75%	16vdc	1267 Ft.			5						3.A	19.5	29.0%	5
SURGERY CHIMES/STROBES N1:SIG9	PS-1	SIG9	1:SIG9	500	14ga	0.0031	0.450	1.382	18.119	7.08%	16vdc	1267 Ft.			5						3.A	19.5	60.5%	5
LAB HALL CHIMES/STROBES N1:SIG10	PS-1	SIG10	1:SIG10	500	14ga	0.0031	0.450	1.382	18.119	7.08%	16vdc	1267 Ft.			5						3.A	19.5	60.5%	5
CENT SPLY/MATERIALS MGMT N1:SIG11	PS-1	SIG11	1:SIG11	500	14ga	0.0031	0.450	1.382	18.119	7.08%	16vdc	1267 Ft.			5						3.A	19.5	60.5%	5
EMERGENCY ROOM STROBES N1:SIG12	PS-1	SIG12	1:SIG12	500	14ga	0.0031	0.450	1.382	18.119	7.08%	16vdc	1267 Ft.			5						3.A	19.5	60.5%	5
EMERGENCY RM HALL STROBES N1:SIG13	PS-1	SIG13	1:SIG13	500	14ga	0.0031	0.450	1.382	18.119	7.08%	16vdc	1267 Ft.			5						3.A	19.5	60.5%	5
1ST FLOOR CENTRAL STROBES N1:SIG14	PS-1	SIG14	1:SIG14	500	14ga	0.0031	0.450	1.382	18.119	7.08%	16vdc	1267 Ft.			5						3.A	19.5	60.5%	5
N1:SIG15 CENT SPLY/MATERIAL CHIME	PS-1	SIG15	1:SIG15	500	14ga	0.0031	0.350	1.075	18.426	5.51%	16vdc	1629 Ft.		5							3.A	19.5	69.3%	5
N1:SIG16 EMERGENCY ROOM CHIMES	PS-1	SIG16	1:SIG16	500	14ga	0.0031	0.350	1.075	18.426	5.51%	16vdc	1629 Ft.		5							3.A	19.5	69.3%	5
N1:SIG17 EMERGENCY RM HALL CHIMES	PS-1	SIG17	1:SIG17	500	14ga	0.0031	0.350	1.075	18.426	5.51%	16vdc	1629 Ft.		5							3.A	19.5	69.3%	5
N1:SIG18 1ST FLOOR CENTRAL CHIMES	PS-2	SIG18	1:SIG18	500	14ga	0.0031	0.350	1.075	18.426	5.51%	16vdc	1629 Ft.		5							3.A	19.5	69.3%	5
N1:SIG19 CHIMES C6-1	PS-2	SIG19	1:SIG19	1000	14ga	0.0031	0.350	2.149	17.351	11.02%	16vdc	1629 Ft.		5							3.A	19.5	38.6%	5
N1:SIG20 CHIMES C5-1, S6-5, S6-6	**PS-2**	**SIG20**	**1:SIG20**	**900**	**14ga**	**0.0031**	0.350	**1.934**	**17.566**	**9.92%**	**16vdc**	**1629 Ft.**		**5**	**0**						**3.A**	**19.5**	**44.7%**	**5**
N1:SIG21 STROBES S6-1	PS-2	SIG21	1:SIG21	1000	14ga	0.0031	0.450	2.763	16.737	14.17%	16vdc	1267 Ft.			5						3.A	19.5	21.1%	5
N1:SIG22 STROBES S6-2	PS-2	SIG22	1:SIG22	100	14ga	0.0031	0.450	0.276	19.224	1.42%	16vdc	1267 Ft.			5						3.A	19.5	85.0%	5
N1:SIG23 CHIMES C3,4-1	PS-2	SIG23	1:SIG23	700	14ga	0.0031	0.372	1.599	17.901	8.20%	16vdc	1532 Ft.							2		3.A	19.5	54.3%	2
N1:SIG24 STROBES S3-1	PS-2	SIG24	1:SIG24	700	14ga	0.0031	0.630	2.708	16.792	13.89%	16vdc	905 Ft.			7						3.A	19.5	22.6%	7
N1:SIG25 STROBES S3-2	PS-2	SIG25	1:SIG25	700	14ga	0.0031	0.760	3.266	16.234	16.75%	16vdc	750 Ft.		7	3						3.A	19.5	6.7%	10
N1:SIG26 CHIME C2-1	PS-2	SIG26	1:SIG26	600	14ga	0.0031	0.700	2.579	16.921	13.22%	16vdc	814 Ft.		10							3.A	19.5	26.3%	10
N1:SIG27 SPARE	PS-2	SIG27	1:SIG27		14ga	0.0031	0.000	0.000	19.500	0.00%	16vdc	0 Ft.									3.A	19.5	100.0%	0
N1:SIG28 STROBES SP6-2	PS-2	SIG28	1:SIG28	600	14ga	0.0031	0.450	1.658	17.842	8.50%	16vdc	1267 Ft.			5						3.A	19.5	52.6%	5
N1:SIG29 4009 SP6-2,S2-4,1ST CENT ELEV#6	PS-2	SIG29	1:SIG29	350	14ga	0.0031	0.015	0.032	19.468	0.17%	16vdc	38002 Ft.								1	3.A	19.5	99.1%	1
N1:SIG30 STROBES 4009A SOUTH PHARMACY	PS-2	SIG30	1:SIG30	350	14ga	0.0031	0.015	0.032	19.468	0.17%	16vdc	38002 Ft.								1	3.A	19.5	99.1%	1
N1:SIG31 STROBES S5-2	PS-2	SIG31	1:SIG31	900	14ga	0.0031	0.558	3.084	16.416	15.81%	16vdc	1022 Ft.							3		3.A	19.5	11.9%	3
N1:SIG32 ELECTRICAL 1E-4902B STROBE	PS-2	SIG32	1:SIG32	350	14ga	0.0031	0.060	0.129	19.371	0.66%	16vdc	9501 Ft.						1			3.A	19.5	96.3%	1
N1:SIG33 STROBE S6-3	PS-2	SIG33	1:SIG33	1000	14ga	0.0031	0.180	1.105	18.395	5.67%	16vdc	3167 Ft.			2						3.A	19.5	68.4%	2
N1:SIG34 STROBE S6-4	PS-2	SIG34	1:SIG34	1000	14ga	0.0031	0.090	0.553	18.947	2.83%	16vdc	6334 Ft.			1						3.A	19.5	84.2%	1
N1:SIG35 STROBE S2-3	PS-2	SIG35	1:SIG35	600	14ga	0.0031	0.910	3.352	16.148	17.19%	16vdc	626 Ft.		4	7						3.A	19.5	4.2%	11
N1:SIG36 STROBE S2-1	PS-3	SIG36	1:SIG36	600	14ga	0.0031	0.690	2.542	16.958	13.04%	16vdc	826 Ft.		6	3						3.A	19.5	27.4%	9
N1:SIG37 STROBE S2-2	PS-3	SIG37	1:SIG37	533	14ga	0.0031	1.070	3.502	15.998	17.96%	16vdc	533 Ft.		5	8						3.A	19.5	0.0%	13
N1:SIG38 SPARE	PS-3	SIG38	1:SIG38		14ga	0.0031	0.000	0.000	19.500	0.00%	16vdc	0 Ft.									3.A	19.5	100.0%	0
N1:SIG39 STROBE OUTSIDE SIAMESE	PS-3	SIG39	1:SIG39	1000	14ga	0.0031	0.060	0.368	19.132	1.89%	16vdc	9501 Ft.					1				3.A	19.5	89.5%	1
N1:SIG40 HORN OUTSIDE SIAMESE	PS-3	SIG40	1:SIG40	1000	14ga	0.0031	0.164	1.007	18.493	5.16%	16vdc	3476 Ft.				2					3.A	19.5	71.2%	2
N1:SIG41 SPARE	PS-3	SIG41	1:SIG41		14ga	0.0031	0.350	0.000	19.500	0.00%	16vdc	1629 Ft.		5							3.A	19.5	88.3%	5
N1:SIG42 CHIME 1ST FLOOR CENTRAL	PS-3	SIG42	1:SIG42	500	14ga	0.0031	0.360	1.105	18.395	5.67%	16vdc	1583 Ft.			4						3.A	19.5	68.4%	4
N1:SIG43 BASEMENT EVS DEPT STROBE CKT	PS-3	SIG43	1:SIG43	600	14ga	0.0031	0.090	0.332	19.168	1.70%	16vdc	6334 Ft.			1						3.A	19.5	90.5%	1
N1:SIG44 SPARE	PS-3	SIG44	1:SIG44		14ga	0.0031	0.000	0.000	19.500	0.00%	16vdc	0 Ft.									3.A	19.5	100.0%	0
N1:SIG45 BASEMENT	PS-3	SIG45	1:SIG45	600	14ga	0.0031	0.712	2.623	16.877	13.45%	16vdc	801 Ft.		9		1					3.A	19.5	25.1%	10
N1:SIG46 STROBES MATERIAL MANAGEMENT	PS-3	SIG46	1:SIG46	600	14ga	0.0031	0.372	1.370	18.130	7.03%	16vdc	1532 Ft.							2		3.A	19.5	60.8%	2
N1:SIG47 BASEMENT CORRIDOR	PS-3	SIG47	1:SIG47	488	14ga	0.0031	1.168	3.500	16.000	17.95%	16vdc	488 Ft.		9	3	1			1		3.A	19.5	0.0%	14
N1:SIG48 SPARE	PS-3	SIG48	1:SIG48		14ga	0.0031	0.000	0.000	19.500	0.00%	16vdc	0 Ft.									3.A	19.5	100.0%	0
N1:SIG49 S9-1 BLOOD W.& SURG DOC OFFICES	PS-3	SIG49	1:SIG49	900	14ga	0.0031	0.266	1.470	18.030	7.54%	16vdc	2143 Ft.	2								3.A	19.5	58.0%	2
N1:SIG50 S9-2 BLOOD LAB EAST	PS-3	SIG50	1:SIG50	900	14ga	0.0031	0.266	1.470	18.030	7.54%	16vdc	2143 Ft.	2								3.A	19.5	58.0%	2
N1:SIG51 ADMITING SOUTH	PS-3	SIG51	1:SIG51	1000	14ga	0.0031	0.266	1.633	17.867	8.38%	16vdc	2143 Ft.	2								3.A	19.5	53.3%	2
N1:SIG52 ADMITING NORTH	PS-3	SIG52	1:SIG52	1000	14ga	0.0031	0.133	0.817	18.683	4.19%	16vdc	4286 Ft.	1								3.A	19.5	76.7%	1
N1:SIG53 ADMITING CHIME	PS-3	SIG53	1:SIG53	1000	14ga	0.0031	0.133	0.817	18.683	4.19%	16vdc	4286 Ft.	1								3.A	19.5	76.7%	1
N1:SIG54 SPARE	PS-3	SIG54	1:SIG54		14ga	0.0031	0.000	0.000	19.500	0.00%	16vdc	0 Ft.									3.A	19.5	100.0%	0
N1:SIG55 C7-9-1 BLOOD LAB SURGERY PREP	PS-3	SIG55	1:SIG55	1000	14ga	0.0031	0.133	0.817	18.683	4.19%	16vdc	4286 Ft.	1								3.A	19.5	76.7%	1
N1:SIG56 SPARE	PS-3	SIG56	1:SIG56		14ga	0.0031	0.000	0.000	19.500	0.00%	16vdc	0 Ft.									3.A	19.5	100.0%	0
N1:SIG57 S1,3 KITCHEN AND SLEEP ROOMS	PS-3	SIG57	1:SIG57	900	14ga	0.0031	0.133	0.735	18.765	3.77%	16vdc	4286 Ft.	1								3.A	19.5	79.0%	1
N1:SIG58 S1,4 GIFT SHOP & ELEVATOR AREA	PS-3	SIG58	1:SIG58	900	14ga	0.0031	0.350	1.934	17.566	9.92%	16vdc	1629 Ft.		5							3.A	19.5	44.7%	5
N1:SIG59 S8,3 SURGERY PREP AND HOLDING	PS-3	SIG59	1:SIG59	900	14ga	0.0031	0.350	1.934	17.566	9.92%	16vdc	1629 Ft.		5							3.A	19.5	44.7%	5
N1:SIG60 S7,1 SURGERY PREP	PS-3	SIG60	1:SIG60	900	14ga	0.0031	0.350	1.934	17.566	9.92%	16vdc	1629 Ft.		5							3.A	19.5	44.7%	5
N1:SIG61 S7,2 SURGERY PREP	PS-3	SIG61	1:SIG61	900	14ga	0.0031	0.140	0.774	18.726	3.97%	16vdc	4072 Ft.		2							3.A	19.5	77.9%	2
N1:SIG62 SPARE	PS-3	SIG62	1:SIG62		14ga	0.0031	0.000	0.000	19.500	0.00%	16vdc	0 Ft.									3.A	19.5	100.0%	0
N1:SIG101 SPARE	XPS-1	SIG63	1:SIG101		14ga	0.0031	0.000	0.000	19.500	0.00%	16vdc	0 Ft.									3.A	19.5	100.0%	0
N1:SIG102 SPARE	XPS-1	SIG64	1:SIG102		14ga	0.0031	0.000	0.000	19.500	0.00%	16vdc	0 Ft.									3.A	19.5	100.0%	0
N1:SIG103 SPARE	XPS-1	SIG65	1:SIG103		14ga	0.0031	0.000	0.000	19.500	0.00%	16vdc	0 Ft.									3.A	19.5	100.0%	0
N1:SIG107 SPARE	XPS-2	SIG66	1:SIG107		14ga	0.0031	0.000	0.000	19.500	0.00%	16vdc	0 Ft.									3.A	19.5	100.0%	0
N1:SIG108 SPARE	XPS-2	SIG67	1:SIG108		14ga	0.0031	0.000	0.000	19.500	0.00%	16vdc	0 Ft.									3.A	19.5	100.0%	0
N1:SIG109 SPARE	XPS-2	SIG68	1:SIG109		14ga	0.0031	0.000	0.000	19.500	0.00%	16vdc	0 Ft.									3.A	19.5	100.0%	0

NOTE:
LUMP SUM METHOD WAS USED TO CALCULATE ALLOWABLE VOLTAGE DROP. THIS METHOD ALLOWS FOR A SMALL MARGIN OF SAFETY, TAKING INTO CONSIDERATION THAT THE ACTUAL INSTALLED CIRCUIT ROUTING MAY DIFFER FROM WHAT IS SHOWN ON THE SHOP DRAWINGS. IF THE ACTUAL CIRCUIT LENGTH IS GOING TO EXCEED THE MAXIMUM ALLOWABLE CIRCUIT LENGTH, CONTACT YOUR LOCAL SIMPLEXGRINNELL DISTRICT OFFICE.

City of Aurora Building Division
Reviewed for Code Compliance
By: M. Apodaca
Date: March 25, 2021
2015 INTERNATIONAL CODES & 2020 NEC

Johnson Controls
DISTRICT - 419
14200 E. EXPOSITION AVE
AURORA, CO 80012
SERVICE: 303-355-0500
PHONE: 303-355-0500
FAX: 303-355-0615

NICET CERTIFICATION INFORMATION
NANCY S. WILTSIE
NICET Fire Alarm, III
Certification #93727
Valid Through: 03/01/24
Nancy S Wiltsie
March 24,2021

THE MEDICAL CENTER OF AURORA NEW MRI

THE MEDICAL CENTER OF AURORA
1501 SOUTH POTOMAC STREET
AURORA, COLORADO 80012

ISSUE LOG: Revisions shown with symbol

MARK	DATE	CAD	CHK	DESCRIPTION
3	03/23/2021	CBR	NSW	PER CITY AND STATE COMMENTS DATED 03/10/2021 THROUGH 03/17/2021
2	03/04/2021	NSW	JRE	REMOVE DUCT DETECTORS FROM GENERAL ALARM
1	02/26/2021	NSW	JRE	PER AHJ COMMENTS DATED 02/26/2021

FOR PERMIT

DRAWN BY:	CBR
CHECKED BY:	NSW
ISSUE DATE:	2/21/21
JOB #:	
PROJECT #:	419:619975503

JOHNSON CONTROLS © 2021

SYSTEM: FIRE ALARM SYSTEM

SHEET: FIRE ALARM CONTROL PANEL INTERIM CALCULATIONS & SCHEDULES (CONT)

FA-602

FILE PATH: C:\Users\jrauchc\Johnson Controls\Project Electronics - 1501 S Potomac - Aurora South\South Tower - Node 1\28-MRI - 2021 - 619975503\Fire\FA-601.dwg
LAST SAVED BY: JRAUCHC
LAST PRINTED: 3/24/2021 11:52:07 AM
30" x 42" - Arch E1 Size

© Johnson Controls 2021. All rights reserved. Reuse, copying, modification or alteration of the drawings and other information contained herein is strictly prohibited.

GENERAL NOTES:

1. THE INFORMATION OR SYMBOLS SHOWN IN BOLD LINETYPE ARE NEW OR RELOCATED.
2. THE INFORMATION OR SYMBOLS SHOWN IN LIGHT LINETYPE ARE EXISTING.

MEDICAL CENTER OF AURORA SOUTH TOWER TRANSPONDER 4 4100es XPDR

Module	Qty	Description	Setting	Standby Current	Total Standby	Alarm Current	Total Alarm
Panel Equipment							
4100-9600	1	BASIC TRANSPONDER	*	0.0870	0.0870	0.0870	0.0870
4100-0634	1	POWER DISTRIBUTION MODULE 120V		0.0000	0.0000	0.0000	0.0000
4100-0636	1	BOX TO BOX HARNESS KIT		0.0000	0.0000	0.0000	0.0000
4100-2300	1	EXPANSION BAY (PHASE 10 ONLY)		0.0000	0.0000	0.0000	0.0000
4100-5311	1	ENHANCED POWER SUPPLY, 3 CHANNELS, IDNet, 120V		0.2250	0.2250	0.4900	0.4900
4009-9601	2	IDNAC REPEATER 120V PLATINUM UL/ULC		0.0700	0.1400	0.0960	0.1920
		Panel Totals			**0.4520**		**0.7690**
IDNet Addressable Devices (SLC)							
4090-9001	**1**	**IDNET SUPERVISED IAM**	*	Constant current draw of .8mA standby and 1mA alarm per address used. Devices requiring additional current are accounted for in the section labeled "Miscellaneous Peripheral Devices Requiring Additional System Power".			
4090-9002	15	IDNET RELAY IAM	*				
4098-9714	**94**	**TRUEALARM PHOTO SMOKE SENSOR**					
4098-9733	9	TRUEALARM HEAT SENSOR	*				
4098-9755	2	TRUEALARM DUCT SMOKE SENSOR W/O RELAY OUTPUT	*				
4098-9756	9	TRUEALARM DUCT SMOKE SENSOR W/ RELAY OUTPUT	*				
4098-9792	**103**	**TRUEALARM SENSOR BASE**	*				
4099-9004	4	ADDRESSABLE SINGLE ACTION MANUAL STATION	*				
Miscellaneous Peripheral Devices That Require (Additional) System Power							
4098-9843	9	ENCAPSULATED RELAY PAM-SD		0.0000	0.0000	0.0150	0.1350
4098-9756	9	TRUEALARM DUCT SMOKE SENSOR W/ RELAY OUTPUT		0.0030	0.0270	0.0150	0.1350
4603-9101	4	SERIAL LCD ANNUNCIATOR		0.0650	0.2600	0.1400	0.5600
2088-9021	5	ENCAPSULATED RELAY PAM-1		0.0000	0.0000	0.0150	0.0750
4098-9605	**2**	**PHOTO SMOKE DETECTOR SSD**		**0.0001**	**0.0002**	**0.0000**	**0.0000**
4098-9788	**2**	**2 WIRE DETECTOR BASE**		**0.0000**	**0.0000**	**0.0000**	**0.0000**
IDNac Notification Appliances			Setting				
4009-9601	**2**	**IDNAC REPEATER 120V PLATINUM UL/ULC**	*	**0.0032**	**0.0064**	**0.0032**	**0.0064**
4906-9202	5	ADDRESSABLE CEILING MNT MC V/O, RED	75	0.0008	0.0040	0.1800	0.9000
49MT-WRF	3	MULTI-TONE AUDIBLE ONLY, RED, WALL MOUNT	520 H	0.0016	0.0048	0.0990	0.2970
49MTV-WRF	**18**	**MULTI-TONE A/V, RED, WALL MOUNT**	**15**	**0.0016**	**0.0288**	**0.1450**	**2.6100**
49MTV-WRF	**10**	**MULTI-TONE A/V, RED, WALL MOUNT**	**30**	**0.0016**	**0.0160**	**0.1630**	**1.6300**
49MTV-WRF	6	MULTI-TONE A/V, RED, WALL MOUNT	75	0.0016	0.0096	0.1980	1.1880
49VO-APPLC	**7**	**STROBE, APPLIANCE ONLY, CEILING MOUNT**	**15**	**0.0008**	**0.0056**	**0.0550**	**0.3850**
49VO-APPLW	1	VO APPLIANCE ONLY WALL MT	15	0.0008	0.0008	0.0470	0.0470
49VO-APPLW	4	VO APPLIANCE ONLY WALL MT	30	0.0008	0.0032	0.0570	0.2280
49VO-APPLW	1	VO APPLIANCE ONLY WALL MT	75	0.0008	0.0008	0.1000	0.1000
49VO-WRF	29	VO, WALL MT, RED, FIRE LABEL	15	0.0008	0.0232	0.0470	1.3630
49VO-WRF	4	VO, WALL MT, RED, FIRE LABEL	30	0.0008	0.0032	0.0570	0.2280
49VO-WRF	1	VO, WALL MT, RED, FIRE LABEL	75	0.0008	0.0008	0.1000	0.1000
		Total IDNac Device Current:			0.1072		9.0824
		IDNac Current Boost for 29vdc Regulated Output **					5.1780
		Peripheral Totals			0.2872		15.1654
		RUI Totals	4		0.0140		0.0140
		Address Totals	134	Addresses	0.1072		0.1340
		System Totals*:		Standby	0.9676	Alarm	16.0824

* Device Address current draw included below (See Additional Current Draws):

Battery Set #1 (Cabinet/Charger #1)			Standby Current	Standby Total	Alarm Current	Alarm Total
Select ALL Power Supplies on this battery set:						
EPS-1				0.6792		8.3084
			Sub Total	0.6792		8.3084
Additional Current Draws:						
IDNac Current Boost for 29vdc Regulated Output **						3.8919
RUI Connected Peripheral Devices		4	x 0.0035	= 0.0140	x 0.0035	= 0.0140
MAPNET/IDNet Device Address Communication Current		134	x 0.000800	= 0.1072	x 0.001000	= 0.1340
			Sub Total	0.8004		12.3483
Spare addressable point capacity	20%	27	x 0.0008	= 0.0216	x 0.001	= 0.0270
			Total	0.8220		12.3753
Standby Time =	4	Hrs	x 0.8220	= 3.2880	Standby Ah	
Alarm Time =	5	Min	0.08333 x 12.3753	= 1.0313	Alarm Ah	
				4.3193		
Additional Spare Battery Capacity =	20%		+	0.8639		
				5.1831		
Battery Discharge Factor =	20%		+	1.0366		
Minimum Battery Required	2081-9274 10AH (2x)			6.2198		
Battery Supplied	2081-9287 25AH (2x)					

* System Totals represent total system current requirements. Those currents may be distributed between multiple battery sets or power supplies as shown above.

** IDNac Current Boost formula: ((29.5 * IDNac Alarm Current) / .92) / 20.4 = Adjusted Current
DC-DC Converter Output = 29.5vdc. Terminal Output is 29vdc due to 0.5vdc internal loss.
Converter Worst Case efficiency is 92%, 20.4vdc represents battery output in 85% depleted state

Repeater Power Supply Battery Set:			Standby	Standby Standby Total	Alarm	Alarm Alarm Total
EPR-1				0.0836		1.2240
Additional Current Draw:						
IDNac Current Boost for 29vdc Regulated Output **				0.0000		0.6431
			Total	0.0836		1.8671
Standby Time =	4	Hrs	x 0.8220	= 0.3344	Standby Ah	
Alarm Time =	5	Min	0.08333 x 1.8671	= 0.1556	Alarm Ah	
				0.4900		
Additional Spare Battery Capacity =	20%		+	0.0980		
				0.5880		
Battery Discharge Factor =	20%		+	0.1176		
Minimum Battery Required	2081-9272 6.2AH (2x)			0.7056		
Battery Supplied	2081-9272 6.2AH (2x)					

Repeater Power Supply Battery Set:				Standby Total		Alarm Total
EPR-2				0.0836		1.2240
Additional Current Draw:						
IDNac Current Boost for 29vdc Regulated Output **				0.0000		0.6431
			Total	0.0836		1.8671
Standby Time =	4	Hrs	x 0.8220	= 0.3344	Standby Ah	
Alarm Time =	5	Min	0.08333 x 1.8671	= 0.1556	Alarm Ah	
				0.4900		
Additional Spare Capacity =	20%		+	0.0980		
				0.5880		
Additional Spare Battery Capacity =	20%		+	0.1176		
Minimum Battery Required	2081-9272 6.2AH (2x)			0.7056		
Battery Supplied	2081-9272 6.2AH (2x)					

3 ***EXISTING TRANSPONDER PANEL IS CONNECTED TO A DEDICATED CIRCUIT FROM THE GENERATOR. BUILDING IS NON-VOICE.***

IDNET CHANNEL N1:T4:M1		ADDRESSES IN USE: 134 (53.6%) | SPARE ADDRESSES: 116 (46.4%)		SWITCH SETTINGS									Yellow = Overwritten PID	
Address	Device Type	Point Type	Location Description	1									PID 1	PID 2
N1:T4:M1-1	PHOTO	SMOKE	FLR 1W ELEC 1-CS16 1:M11-1	X								ON	4098-9714	4098-9792
N1:T4:M1-2	PHOTO	SMOKE	FLR 1W OR 11 1-SS100 SW 1:M11-2		X							ON	4098-9714	4098-9792
N1:T4:M1-3	PHOTO	SMOKE	FLR 1W OR 11 1-SS100 NE 1:M11-3	X	X							ON	4098-9714	4098-9792
N1:T4:M1-4	RIAM	DHOLDER	FLR 1W OR 11 1-SS100 1:M11-4			X						ON	4090-9002	
N1:T4:M1-5	HEAT	HEAT	FLR 1W TLT 1-CS15 1:M11-5	X		X						ON	4098-9733	4098-9792
N1:T4:M1-6	PHOTO	SMOKE	FLR 1W PASS 1-CS14 @TLT 1:M11-6		X	X						ON	4098-9714	4098-9792
N1:T4:M1-7	PHOTO	SMOKE	FLR 1W PASS 1-CS14 @STER STG 1:M11-7	X	X	X						ON	4098-9714	4098-9792
N1:T4:M1-8	PHOTO	SMOKE	FLR 1W STER STG 1-CS10 NORTH 1:M11-8				X					ON	4098-9714	4098-9792
N1:T4:M1-9	PHOTO	SMOKE	FLR 1W STER STG 1-CS10 1:M11-9	X			X					ON	4098-9714	4098-9792
N1:T4:M1-10	PHOTO	SMOKE	FLR 1W JAN1-CS13 1:M11-10		X		X					ON	4098-9714	4098-9792
N1:T4:M1-11	PHOTO	SMOKE	FLR 1W JAN 1-SS038 1:M11-11	X	X		X					ON	4098-9714	4098-9792
N1:T4:M1-12	PHOTO	SMOKE	FLR 1W STER STG 1-CS10 CTR 1:M11-12			X	X					ON	4098-9714	4098-9792
N1:T4:M1-13	PHOTO	SMOKE	FLR 1W STER STG 1-CS10 CTR 1:M11-13	X		X	X					ON	4098-9714	4098-9792
N1:T4:M1-14	PHOTO	SMOKE	FLR 1W STER STG 1-CS10 SOUTH 1:M11-14		X	X	X					ON	4098-9714	4098-9792
N1:T4:M1-15	PHOTO	SMOKE	FLR 1W STER STG 1-CS10 SOUTH 1:M11-15	X	X	X	X					ON	4098-9714	4098-9792
N1:T4:M1-16	PHOTO	SMOKE	FLR 1W MAKE UP 1-CS07 W 1:M11-16					X				ON	4098-9714	4098-9792
N1:T4:M1-17	PHOTO	SMOKE	FLR 1W MAKE UP 1-CS07 E 1:M11-17	X				X				ON	4098-9714	4098-9792
N1:T4:M1-18	PHOTO	SMOKE	FLR 1W MAKE UP 1-CS07 @CORR 1:M11-18		X			X				ON	4098-9714	4098-9792
N1:T4:M1-19	PHOTO	SMOKE	FLR 1W STERILIZER 1-CS08 1:M11-19	X	X			X				ON	4098-9714	4098-9792
N1:T4:M1-20	PHOTO	SMOKE	FLR 1W CLEAN STORAGE 1-CS06 1:M11-20			X		X				ON	4098-9714	4098-9792
N1:T4:M1-21	PHOTO	SMOKE	FLR 1W DECON 1-CS03 NORTH 1:M11-21	X		X		X				ON	4098-9714	4098-9792
N1:T4:M1-22	PHOTO	SMOKE	FLR 1W DECON 1-CS03 SOUTH 1:M11-22		X	X		X				ON	4098-9714	4098-9792
N1:T4:M1-23	PHOTO	SMOKE	FLR 1W CART WASH 1-CS04 NORTH 1:M11-23	X	X	X		X				ON	4098-9714	4098-9792
N1:T4:M1-24	PHOTO	SMOKE	FLR 1W CART WASH 1-CS04 SOUTH 1:M11-24				X	X				ON	4098-9714	4098-9792
N1:T4:M1-25	PHOTO	SMOKE	FLR 1W CSS OFF 1-CS02 1:M11-25	X			X	X				ON	4098-9714	4098-9792
N1:T4:M1-26	PHOTO	SMOKE	FLR 1W DI WATER 1-CS09 1:M11-26		X		X	X				ON	4098-9714	4098-9792
N1:T4:M1-27	PHOTO	SMOKE	FLR 1W SURGERY VENDOR 1-CS01 M1-27	X	X		X	X				ON	4098-9714	4098-9792
N1:T4:M1-28	PHOTO	SMOKE	FLR 1W CLEAN STORAGE 1-CS05 M1-28			X	X	X				ON	4098-9714	4098-9792
N1:T4:M1-29	RPHOTO	LSDUCT	FLR 1W PASS 1-CS14 SUP FSD 1:M11-29	X		X	X	X				ON	4098-9756	
N1:T4:M1-30	RPHOTO	LSDUCT	FLR 1W STER STG SUP FSD 1-CS10 1:M11-30		X	X	X	X				ON	4098-9756	
N1:T4:M1-31	RPHOTO	LSDUCT	FLR 1W CARTWASH 1-CS04 RET FSD 1:M11-31	X	X	X	X	X				ON	4098-9756	
N1:T4:M1-32	RPHOTO	LSDUCT	FLR 1W CSS OFF 1-CS02 RET FSD 1:M11-32						X			ON	4098-9756	
N1:T4:M1-33	RPHOTO	LSDUCT	FLR 1W SRG VEND 1-CS01 RET FSD 1:M11-33	X					X			ON	4098-9756	
N1:T4:M1-34	RPHOTO	LSDUCT	FLR 1W CSS OFF 1-CS02 RET FSD 1:M11-34		X				X			ON	4098-9756	
N1:T4:M1-35	RPHOTO	LSDUCT	FLR 1W DECON 1-CS03 SUP FSD 1:M11-35	X	X				X			ON	4098-9756	
N1:T4:M1-36	RPHOTO	LSDUCT	FLR 1W CL STG 1-CS05 RET FSD 1:M11-36			X			X			ON	4098-9756	
N1:T4:M1-37	RPHOTO	LSDUCT	FLR 1W CL STG 1-CS05 SUP FSD 1:M11-37	X		X			X			ON	4098-9756	
N1:T4:M1-38	RIAM	RELAY	ROOF RTU-2 OR 11 ALARM TO DDC 1:M11-38		X	X			X			ON	4090-9002	
N1:T4:M1-39	PHOTO	SMOKE	FLR 1W STER STG 1-CS10 SOUTH 1:M11-39	X	X	X			X			ON	4098-9714	4098-9792
N1:T4:M1-40			SPARE				X		X			ON		
N1:T4:M1-41			SPARE	X			X		X			ON		
N1:T4:M1-42			SPARE		X		X		X			ON		
N1:T4:M1-43			SPARE	X	X		X		X			ON		
N1:T4:M1-44			SPARE			X	X		X			ON		
N1:T4:M1-45	PHOTO	SMOKE	FLR 1W OR 1 1-SS118 NE 1:M11-45	X		X	X		X			ON	4098-9714	4098-9792
N1:T4:M1-46	PHOTO	SMOKE	FLR 1W OR 1 1-SS118 SW 1:M11-46		X	X	X		X			ON	4098-9714	4098-9792
N1:T4:M1-47	RIAM	DHOLDER	FLR 1W OR 1 1-SS118 1:M11-47	X	X	X	X		X			ON	4090-9002	
N1:T4:M1-48	PHOTO	SMOKE	FLR 1W OR 2 1-SS119 NE 1:M11-48					X	X			ON	4098-9714	4098-9792
N1:T4:M1-49	PHOTO	SMOKE	FLR 1W OR 2 1-SS119 SW 1:M11-49	X				X	X			ON	4098-9714	4098-9792
N1:T4:M1-50	RIAM	DHOLDER	FLR 1W OR 2 1-SS119 1:M11-50		X			X	X			ON	4090-9002	
N1:T4:M1-51	PHOTO	SMOKE	FLR 1W CYSTO OR 3 1-SS129 NE 1:M11-51	X	X			X	X			ON	4098-9714	4098-9792
N1:T4:M1-52	PHOTO	SMOKE	FLR 1W CYSTO OR 3 1-SS129 SW 1:M11-52			X		X	X			ON	4098-9714	4098-9792
N1:T4:M1-53	RIAM	DHOLDER	FLR 1W CYSTO OR 3 1-SS129 1:M11-53	X		X		X	X			ON	4090-9002	
N1:T4:M1-54	PHOTO	SMOKE	FLR 1W EQ. STG. 1-SS131 1:M11-54		X	X		X	X			ON	4098-9714	4098-9792
N1:T4:M1-55	PHOTO	SMOKE	FLR 1W WOMENS LCKR RM 1-SS135 1:M11-55	X	X	X		X	X			ON	4098-9714	4098-9792
N1:T4:M1-56	HEAT	HEAT	FLR 1W WOMENS BATH 1-SS136 1:M11-56				X	X	X			ON	4098-9733	4098-9792
N1:T4:M1-57	PHOTO	SMOKE	FLR 1W MENS LOCKER RM 1-SS138 1:M11-57	X			X	X	X			ON	4098-9714	4098-9792
N1:T4:M1-58	PHOTO	SMOKE	FLR 1W NURSE LOUNGE 1-SS139 1:M11-58		X		X	X	X			ON	4098-9714	4098-9792
N1:T4:M1-59	RIAM	RELAY	ROOF RTU-2 OR 1 ALARM TO DDC 1:M11-59	X	X		X	X	X			ON	4090-9002	
N1:T4:M1-60	RIAM	RELAY	ROOF RTU-2 OR 2 ALARM TO DDC 1:M11-60			X	X	X	X			ON	4090-9002	
N1:T4:M1-61	RIAM	RELAY	ROOF RTU-2 OR 3 ALARM TO DDC 1:M11-61	X		X	X	X	X			ON	4090-9002	
N1:T4:M1-62	PHOTO	SMOKE	FLR 1W CORR 1-SS122 @OR 6 1:M11-62		X	X	X	X	X			ON	4098-9714	4098-9792
N1:T4:M1-63	PHOTO	SMOKE	FLR 1W CORR 1-SS122 @OR 7 1:M11-63	X	X	X	X	X	X			ON	4098-9714	4098-9792
N1:T4:M1-64	PHOTO	SMOKE	FLR 1W CORR 1-SS122 @OR 2 1:M11-64							X		ON	4098-9714	4098-9792
N1:T4:M1-65	PHOTO	SMOKE	FLR 1W CORR 1-SS122 @OR 1 1:M11-65	X						X		ON	4098-9714	4098-9792
N1:T4:M1-66	PHOTO	SMOKE	FLR 1W CORR 1-SS029 @N CORR 1:M11-66		X					X		ON	4098-9714	4098-9792
N1:T4:M1-67	PHOTO	SMOKE	FLR 1W CORR 1-SS037 @E CORR 1:M11-67	X	X					X		ON	4098-9714	4098-9792
N1:T4:M1-68	PHOTO	SMOKE	FLR 1W CORR 1-SS036 1:M11-68			X				X		ON	4098-9714	4098-9792
N1:T4:M1-69	PHOTO	SMOKE	FLR 1W EQUIP STOR @ OR1 1:M11-69	X		X				X		ON	4098-9714	4098-9792
N1:T4:M1-70			SPARE		X	X				X		ON		
N1:T4:M1-71			SPARE	X	X	X				X		ON		
N1:T4:M1-72	PHOTO	SMOKE	FLR 1W STOR 1-SS035 1:M11-72				X			X		ON	4098-9714	4098-9792
N1:T4:M1-73	PHOTO	SMOKE	FLR 1W SOILED FLUIDS 1-SS032 1:M11-73	X			X			X		ON	4098-9714	4098-9792
N1:T4:M1-74			SPARE		X		X			X		ON		
N1:T4:M1-75	PHOTO	SMOKE	FLR 1W NURSE STATION A 1-PA10 1:M11-75	X	X		X			X		ON	4098-9714	4098-9792
N1:T4:M1-76	PHOTO	SMOKE	FLR 1W DAVINCI OR 4 1-SS031 NW 1:M11-76			X	X			X		ON	4098-9714	4098-9792
N1:T4:M1-77	PHOTO	SMOKE	FLR 1W DAVINCI OR 4 1-SS031 SE 1:M11-77	X		X	X			X		ON	4098-9714	4098-9792
N1:T4:M1-78	PHOTO	SMOKE	FLR 1W PASS 1-PA11 1:M11-78		X	X	X			X		ON	4098-9714	4098-9792
N1:T4:M1-79	PHOTO	SMOKE	FLR 1W CLEAN UTILITY 1-PA07 1:M11-79	X	X	X	X			X		ON	4098-9714	4098-9792
N1:T4:M1-80	PHOTO	SMOKE	FLR 1W CNC OFFICE 1-PA09 1:M11-80					X		X		ON	4098-9714	4098-9792
N1:T4:M1-81	PHOTO	SMOKE	FLR 1W PACU RECOVERY 1-PA01 N 1:M11-81	X				X		X		ON	4098-9714	4098-9792
N1:T4:M1-82	PHOTO	SMOKE	FLR 1W PASS 1-PA12 1:M11-82		X			X		X		ON	4098-9714	4098-9792
N1:T4:M1-83	PHOTO	SMOKE	FLR 1W STF LNGE 1-PA14 1:M11-83	X	X			X		X		ON	4098-9714	4098-9792
N1:T4:M1-84	HEAT	HEAT	FLR 1W TLT PA15 1:M11-84			X		X		X		ON	4098-9733	4098-9792
N1:T4:M1-85	PHOTO	SMOKE	FLR 1W PACU RECOVERY 1-PA01 S 1:M11-85	X		X		X		X		ON	4098-9714	4098-9792
N1:T4:M1-86	PHOTO	SMOKE	FLR 1W SOILED UTILITY 1-PA08 1:M11-86		X	X		X		X		ON	4098-9714	4098-9792
N1:T4:M1-87	PHOTO	SMOKE	FLR 1W PASS 1-PA06 1:M11-87	X	X	X		X		X		ON	4098-9714	4098-9792
N1:T4:M1-88	PHOTO	SMOKE	FLR 1W ELEC 1-PA05 1:M11-88				X	X		X		ON	4098-9714	4098-9792
N1:T4:M1-89	ADRPUL	PULL	FLR 1W NURSE STATION A 1-PA10 1:M11-89	X			X	X		X		ON	4099-9004	
N1:T4:M1-90	RIAM	RRELAY	FLR 1W DAVINCI OR 4 1-SS029 1:M11-90		X		X	X		X		ON	4090-9002	
N1:T4:M1-91	RIAM	RELAY	ROOF RTU-2 OR 4 ALARM TO DDC 1:M11-91	X	X		X	X		X		ON	4090-9002	
N1:T4:M1-92			SPARE			X	X	X		X		ON		
N1:T4:M1-93			SPARE	X		X	X	X		X		ON		
N1:T4:M1-94			SPARE		X	X	X	X		X		ON		
N1:T4:M1-95	PHOTO	SMOKE	FLR 1W HALL 04 @PRE-OP HOLD 1:M11-95	X	X	X	X	X		X		ON	4098-9714	4098-9792
N1:T4:M1-96	PHOTO	SMOKE	FLR 1W HALL 04 @COMM 1-SS216 1:M11-96						X	X		ON	4098-9714	4098-9792
N1:T4:M1-97	PHOTO	SMOKE	FLR 1W HALL 03 @RECPT/SCHED 1:M11-97	X					X	X		ON	4098-9714	4098-9792
N1:T4:M1-98	PHOTO	SMOKE	FLR 1W HALL 03 @ OFFICES 1:M11-98		X				X	X		ON	4098-9714	4098-9792
N1:T4:M1-99	PHOTO	SMOKE	FLR 1W HALL 03 @SAMEDAY SURG 1:M11-99	X	X				X	X		ON	4098-9714	4098-9792
N1:T4:M1-100	PHOTO	SMOKE	FLR 1W PASS 1-SS204 S 1:M11-100			X			X	X		ON	4098-9714	4098-9792
N1:T4:M1-101	PHOTO	SMOKE	FLR 1W PASS 1-SS204 CTR 1:M11-101	X		X			X	X		ON	4098-9714	4098-9792
N1:T4:M1-102	PHOTO	SMOKE	FLR 1W PASS 1-SS204 N 1:M11-102		X	X			X	X		ON	4098-9714	4098-9792
N1:T4:M1-103	PHOTO	SMOKE	FLR 1W STORE RM 1-SS201 1:M11-103	X	X	X			X	X		ON	4098-9714	4098-9792
N1:T4:M1-104	PHOTO	SMOKE	FLR 1W EVS 1-SS202 1:M11-104				X		X	X		ON	4098-9714	4098-9792
N1:T4:M1-105	HEAT	HEAT	FLR 1W TLT 1-SS203 1:M11-105	X			X		X	X		ON	4098-9733	4098-9792
N1:T4:M1-106	ADRPUL	PULL	FLR 1W NURSE STAT A 1-SS205 1:M11-106		X		X		X	X		ON	4099-9004	
N1:T4:M1-107	PHOTO	SMOKE	FLR 1W PASS E 1-SS212 1:M11-107	X	X		X		X	X		ON	4098-9714	4098-9792
N1:T4:M1-108	HEAT	HEAT	FLR 1W TLT 1-SS206 1:M11-108			X	X		X	X		ON	4098-9733	4098-9792
N1:T4:M1-109	PHOTO	SMOKE	FLR 1W MEDS 1-SS207 1:M11-109	X		X	X		X	X		ON	4098-9714	4098-9792
N1:T4:M1-110	PHOTO	SMOKE	FLR 1W SOIL UTIL 1-SS208 1:M11-110		X	X	X		X	X		ON	4098-9714	4098-9792
N1:T4:M1-111	PHOTO	SMOKE	FLR 1W OFF 1-SS209 1:M11-111	X	X	X	X		X	X		ON	4098-9714	4098-9792
N1:T4:M1-112	PHOTO	SMOKE	FLR 1W PASS 1-SS210 1:M11-112					X	X	X		ON	4098-9714	4098-9792
N1:T4:M1-113	PHOTO	SMOKE	FLR 1W WK RM 1-SS215 1:M11-113	X				X	X	X		ON	4098-9714	4098-9792
N1:T4:M1-114	PHOTO	SMOKE	FLR 1W LN UTIL 1-SS214 1:M11-114		X			X	X	X		ON	4098-9714	4098-9792
N1:T4:M1-115	ADRPUL	PULL	FLR 1W NURSE STAT B 1-SS213 1:M11-115	X	X			X	X	X		ON	4099-9004	
N1:T4:M1-116	PHOTO	SMOKE	FLR 1W PASS W 1-SS2121:M11-116			X		X	X	X		ON	4098-9714	4098-9792
N1:T4:M1-117	HEAT	HEAT	FLR 1W TLT 1-SS221 1:M11-117	X		X		X	X	X		ON	4098-9733	4098-9792
N1:T4:M1-118	PHOTO	SMOKE	FLR 1W NOUR 1-SS222 1:M11-118		X	X		X	X	X		ON	4098-9714	4098-9792
N1:T4:M1-119	PHOTO	SMOKE	FLR 1W PASS E 1-SS224 1:M11-119	X	X	X		X	X	X		ON	4098-9714	4098-9792
N1:T4:M1-120	PHOTO	SMOKE	FLR 1W PASS N 1-SS2241:M11-120				X	X	X	X		ON	4098-9714	4098-9792
N1:T4:M1-121	PHOTO	SMOKE	FLR 1W PASS S 1-SS224 1:M11-121	X			X	X	X	X		ON	4098-9714	4098-9792
N1:T4:M1-122	ADRPUL	PULL	FLR 1W NURSE STAT C 1-SS223 1:M11-122		X		X	X	X	X		ON	4099-9004	
N1:T4:M1-123	HEAT	HEAT	FLR 1W TLT 1-SS219 1:M11-123	X	X		X	X	X	X		ON	4098-9733	4098-9792
N1:T4:M1-124	HEAT	HEAT	FLR 1W TLT 1-SS218 1:M11-124			X	X	X	X	X		ON	4098-9733	4098-9792
N1:T4:M1-125	PHOTO	SMOKE	FLR 1W NURSE LOUNGE 1-SS217 1:M11-125	X		X	X	X	X	X		ON	4098-9714	4098-9792

NOTE: THE LABELS SHOWN ABOVE WILL BE USED FOR PROGRAMMING PURPOSES.
THE LABELS ARE BASED UPON INFORMATION SHOWN ON THE ARCHITECTURAL DRAWINGS.
ANY CHANGES TO THESE LABELS MUST BE NOTED ON THE SUBMITTAL REVIEW, PRIOR TO PROGRAMMING.
POINTS SHOWN IN ITALIC TEXT REFER TO EXISTING DEVICES.

IDNET CHANNEL N1:T4:M1		ADDRESSES IN USE: 134 (53.6%) | SPARE ADDRESSES: 116 (46.4%)		SWITCH SETTINGS										
Address			Location Description	1									PID 1	PID 2
N1:T4:M1-126	HEAT	HEAT	FLR 1W TLT 1-SS220 1:M11-126		X	X	X	X	X	X		ON	4098-9733	4098-9792
N1:T4:M1-127	PHOTO	SMOKE	FLR 1W COMM 1-SS216 1:M11-127	X	X	X	X	X	X	X		ON	4098-9714	4098-9792
N1:T4:M1-128	PHOTO	LSDUCT	ROOF RTU-3 SUP 1:M11-128								X	ON	4098-9755	
N1:T4:M1-129	PHOTO	LSDUCT	ROOF RTU-3 RET 1:M11-129	X							X	ON	4098-9755	
N1:T4:M1-130	RIAM	RELAY	ROOF RTU-3 SUP DET TO DDC 1:M11-130		X						X	ON	4090-9002	
N1:T4:M1-131	RIAM	RELAY	ROOF RTU-3 RET DET TO DDC 1:M11-131	X	X						X	ON	4090-9002	
N1:T4:M1-132	RIAM	RELAY	ROOF RTU-3 ALARM TO DDC 1:M11-132			X					X	ON	4090-9002	
N1:T4:M1-133	RIAM	RELAY	ROOF RTU-3 SUP FSD TO DDC 1:M11-133	X		X					X	ON	4090-9002	
N1:T4:M1-134	RIAM	RELAY	ROOF RTU-3 RET FSD TO DDC 1:M11-133		X	X					X	ON	4090-9002	
N1:T4:M1-135			SPARE	X	X	X					X	ON		
N1:T4:M1-136			SPARE				X				X	ON		
N1:T4:M1-137	**PHOTO**	**SMOKE**	**FLR 1W CHANGING AREA 7200A 1:M1-137**	X			X				X	ON	4098-9714	4098-9792
N1:T4:M1-138	**PHOTO**	**SMOKE**	**FLR 1W BREAK ROOM 7300A 1:M1-138**		X		X				X	ON	4098-9714	4098-9792
N1:T4:M1-139	**PHOTO**	**SMOKE**	**FLR 1W O/S RADIOLOGY 05 7202A 1:M1-139** 3	X	X		X				X	ON	4098-9714	4098-9792
N1:T4:M1-140	**PHOTO**	**SMOKE**	**FLR 1W STAFF HALL 7203A E 1:M1-140**			X	X				X	ON	4098-9714	4098-9792
N1:T4:M1-141	**PHOTO**	**SMOKE**	**FLR 1W STAFF HALL 7203A W 1:M1-141**	X		X	X				X	ON	4098-9714	4098-9792
N1:T4:M1-142	**PHOTO**	**SMOKE**	**FLR 1W TECH WORK AREA 7204A 1:M1-142**		X	X	X				X	ON	4098-9714	4098-9792
N1:T4:M1-143	**PHOTO**	**SMOKE**	**FLR 1W EQUIPMENT ROOM 7203B 1:M1-143**	X	X	X	X				X	ON	4098-9714	4098-9792
N1:T4:M1-144	**PHOTO**	**SMOKE**	**FLR 1W CONTROL AREA 7402B N 1:M1-144**					X			X	ON	4098-9714	4098-9792
N1:T4:M1-145	**PHOTO**	**SMOKE**	**FLR 1W PATIENT HOLDING 7402D 1:M1-145**	X				X			X	ON	4098-9714	4098-9792
N1:T4:M1-146	**PHOTO**	**SMOKE**	**FLR 1W CONTROL AREA 7402B S 1:M1-146**		X			X			X	ON	4098-9714	4098-9792
N1:T4:M1-147	**IAM**	**FIRE**	**FLR 1W OUTSIDE MRI 2 7402A 1:M1-147**	X	X			X			X	ON	4090-9001	
N1:T4:M1-148			SPARE			X		X			X	ON		
THRU												ON		
N1:T4:M1-250					X		X	X	X	X	X	ON		

NOTE: THE LABELS SHOWN ABOVE WILL BE USED FOR PROGRAMMING PURPOSES.
THE LABELS ARE BASED UPON INFORMATION SHOWN ON THE ARCHITECTURAL DRAWINGS.
ANY CHANGES TO THESE LABELS MUST BE NOTED ON THE SUBMITTAL REVIEW, PRIOR TO PROGRAMMING.
POINTS SHOWN IN ITALIC TEXT REFER TO EXISTING DEVICES.

City of Aurora Building Division
Reviewed for Code Compliance
By: M. Apodaca
Date: March 25, 2021
2015 INTERNATIONAL CODES & 2020 NEC

Johnson Controls
DISTRICT - 419
14200 E. EXPOSITION AVE
AURORA, CO 80012
SERVICE: 303-355-0500
PHONE: 303-355-0500
FAX: 303-355-0615

NICET CERTIFICATION INFORMATION
NANCY S. WILTSIE
NICET Fire Alarm, III
Certification #93727
Valid Through: 03/01/24
March 24,2021

THE MEDICAL CENTER OF AURORA NEW MRI

THE MEDICAL CENTER OF AURORA
1501 SOUTH POTOMAC STREET
AURORA, COLORADO 80012

ISSUE LOG: Revisions shown with 3 symbol

MARK	DATE	CAD	CHK	DESCRIPTION
3	03/23/2021	CBR	NSW	PER CITY AND STATE COMMENTS DATED 03/10/2021 THROUGH 03/17/2021
2	03/04/2021	NSW	JRE	REMOVE DUCT DETECTORS FROM GENERAL ALARM
1	02/26/2021	NSW	JRE	PER AHJ COMMENTS DATED 02/26/2021

FOR PERMIT

DRAWN BY:	CBR
CHECKED BY:	NSW
ISSUE DATE:	2/21/21
JOB #:	
PROJECT #:	419:619975503

JOHNSON CONTROLS © 2021

SYSTEM: FIRE ALARM SYSTEM

SHEET: TRANSPONDER 4 CALCULATIONS & SCHEDULES

FA-603

FILE PATH: C:\Users\jrauchc\Johnson Controls\Project Electronics - 1501 S Potomac - Aurora South\South Tower - Node 1\28-MRI - 2021 - 619975503\Fire\FA-601.dwg
LAST SAVED BY: JRAUCHC
LAST PRINTED: 3/24/2021 11:52:08 AM
30" x 42" - Arch E1 Size

© Johnson Controls 2021. All rights reserved. Reuse, copying, modification or alteration of the drawings and other information contained herein is strictly prohibited.

GENERAL NOTES:

1. THE INFORMATION OR SYMBOLS SHOWN IN BOLD LINETYPE ARE NEW OR RELOCATED.
2. THE INFORMATION OR SYMBOLS SHOWN IN LIGHT LINETYPE ARE EXISTING.

MEDICAL CENTER OF AURORA SOUTH TOWER TRANSPONDER 4 - EPS-1 CIRCUIT SUMMARY & VOLTAGE DROP

Channel	Description	Alarm Current	% Drop	Unit Load*	Wire Length	Spare Current	Spare VoltageDrop
N1:T4:A2:1	**FLR 1W OR 11, STERILE STG**	**2.747A**	**8.18%**	**37**	**855**	**8%**	**60%**
N1:T4:A2:2	FLR 1W OR 1-4, PACU CORR	2.430A	4.88%	38	989	19%	76%
N1:T4:A2:3	FLR 1W OR RECOVERY	1.649A	5.24%	25	535	45%	75%
EPR2	**FLR 1W MRI AREA BREAK RM 7300A**	**1.128A**	**2.37%**	**17**	**291**	**62%**	**89%**
EPR1	PACU RECOVERY	1.128A	2.53%	17	357	62%	88%

N1:T4:A2: ENHANCED POWER SUPPLY - CHANNEL 1

IDNac Address	Device Type	PID	Setting	Custom Label (Max 40 Characters)		SWITCH SETTINGS 1								
N1:T4:A2:1-1	VO	49VO-WRF	15cd	FLR 1W ELEC 1-CS16 1:A2:1-1		X								ON
N1:T4:A2:1-2	AV	49MTV-WRF	15cd	FLR 1W PASS 1-CS14 1:A2:1-2			X							ON
N1:T4:A2:1-3	VO	49VO-WRF	15cd	FLR 1W TLT 1-CS15 1:A2:1-3		X	X							ON
N1:T4:A2:1-4	AV	49MTV-WRF	15cd	FLR 1W PASS 1-CS14 1:A2:1-4				X						ON
N1:T4:A2:1-5	STRB	4906-9202	75cd	FLR 1W CASE CARTS 1-CS11 1:A2:1-5		X		X						ON
N1:T4:A2:1-6	STRB	4906-9202	75cd	FLR 1W STERILE STG. 1-CS1 1:A2:1-6			X	X						ON
N1:T4:A2:1-7	VO	49VO-APPLW	30cd	FLR 1W OR 11 1-SS1 1:A2:1-7		X	X	X						ON
N1:T4:A2:1-8	STRB	4906-9202	75cd	FLR 1W STERILE STG. 1-CS1 1:A2:1-8					X					ON
N1:T4:A2:1-9	AV	49MTV-WRF	75cd	FLR 1W MAKE UP 1-CS7 1:A2:1-9		X			X					ON
N1:T4:A2:1-10	AV	49MTV-WRF	75cd	FLR 1W MAKE UP 1-CS7 1:A2:1-1			X		X					ON
N1:T4:A2:1-11	VO	49VO-WRF	15cd	FLR 1W MAKE UP 1-CS7 1:A2:1-11		X	X		X					ON
N1:T4:A2:1-12	VO	49VO-WRF	30cd	FLR 1W STERILIZER 1-CS8 1:A2:1-12				X	X					ON
N1:T4:A2:1-13	VO	49VO-WRF	30cd	FLR 1W CLEAN STG 1-CS6 1:A2:1-13		X		X	X					ON
N1:T4:A2:1-14	AV	49MTV-WRF	30cd	FLR 1W DECON. 1-CS3 1:A2:1-14			X	X	X					ON
N1:T4:A2:1-15	AV	49MTV-WRF	75cd	FLR 1W CART WASH 1-CS4 1:A2:1-15		X	X	X	X					ON
N1:T4:A2:1-16	VO	49VO-WRF	15cd	FLR 1W DI WATER 1-CS9 1:A2:1-16						X				ON
N1:T4:A2:1-17	VO	49VO-WRF	15cd	FLR 1W SURG VEND 1-CS1 1:A2:1-17		X				X				ON
N1:T4:A2:1-18	VO	49VO-WRF	15cd	FLR 1W CLEAN STG 1-CS5 1:A2:1-18			X			X				ON
N1:T4:A2:1-19	STRB	4906-9202	75cd	FLR 1W STERILE STG. 1-CS1 1:A2:1-6		X	X			X				ON
N1:T4:A2:1-20	STRB	4906-9202	75cd	FLR 1W STERILE STG. 1-CS1 1:A2:1-6				X		X				ON
N1:T4:A2:1-21	AO	49MT-WRF	520 Hz	FLR 1W STERILE STG. 1-CS1 1:A2:1-6		X		X		X				ON
N1:T4:A2:1-22	AO	49MT-WRF	520 Hz	FLR 1W STERILE STG. 1-CS1 1:A2:1-6			X	X		X				ON
N1:T4:A2:1-23	AO	49MT-WRF	520 Hz	FLR 1W STERILE STG. 1-CS1 1:A2:1-6		X	X	X		X				ON
N1:T4:A2:1-24	VO	49VO-APPLW	15cd	FLR 1 RADIOLOGY 03 CHANGING AREA					X	X				ON
N1:T4:A2:1-25	**REPEATER**	**4009-9601**		**FLR 1W MRI BREAK ROOM**	**1-T4:A2:1-25**	X			X	X				ON
N1:T4:A2:1-26	**AV**	**49MTV-WRF**	**30cd**	**FLR 1W BREAK ROOM 7300A**	**1-T4:A2:1-26**		X		X	X				ON
N1:T4:A2:1-27	**VO**	**49VO-APPLC**	**15cd**	**FLR 1W CHANGING AREA 7200A**	**1-T4:A2:1-27**	X	X		X	X				ON
N1:T4:A2:1-28	**VO**	**49VO-APPLC**	**15cd**	**FLR 1W O/S RADI. 05 7202A** (revision 3)	**1-T4:A2:1-28**			X	X	X				ON
N1:T4:A2:1-29	**AV**	**49MTV-WRF**	**15cd**	**FLR 1W STAFF HALL 7203A**	**1-T4:A2:1-29**	X		X	X	X				ON
N1:T4:A2:1-30	**AV**	**49MTV-WRF**	**15cd**	**FLR 1W EQUIPMENT ROOM 7203B**	**1-T4:A2:1-30**		X	X	X	X				ON
N1:T4:A2:1-31	**VO**	**49VO-APPLC**	**15cd**	**FLR 1W TECH WORK AREA 7204A**	**1-T4:A2:1-31**	X	X	X	X	X				ON
N1:T4:A2:1-32	**AV**	**49MTV-WRF**	**15cd**	**FLR 1W CONTROL AREA 7402B N**	**1-T4:A2:1-32**						X			ON
N1:T4:A2:1-33	**VO**	**49VO-APPLC**	**15cd**	**FLR 1W TLT 7402C**	**1-T4:A2:1-33**	X					X			ON
N1:T4:A2:1-34	**VO**	**49VO-APPLC**	**15cd**	**FLR 1W PATIENT HOLDING 7402D**	**1-T4:A2:1-34**		X				X			ON
N1:T4:A2:1-35	**AV**	**49MTV-WRF**	**15cd**	**FLR 1W CONTROL AREA 7402B S**	**1-T4:A2:1-35**	X	X				X			ON
N1:T4:A2:1-36	**VO**	**49VO-APPLC**	**15cd**	**FLR 1W CHANGING ROOM 7402E**	**1-T4:A2:1-36**			X			X			ON
N1:T4:A2:1-37	**VO**	**49VO-APPLC**	**15cd**	**FLR 1W STAFF TOILET 7404A**	**1-T4:A2:1-37**	X		X			X			ON

N1:T4:A2:1 — **Notification SLC Distributed Load Voltage Drop**

Starting Voltage:	29vdc			
Min. Device Voltage:	23.vdc	Primary Wire Gauge: 14ga	Wire Res. Per Ft. 0.003070	@ 75° Celsius
Allowable % Drop:	20.7%	Home Run Wire Gauge: 14ga	Wire Res. Per Ft. 0.003070	@ 75° Celsius

Branch	Device #	From	Distance (Feet)	PID	Setting	Device Draw	Class B Calculations Current at Device	Voltage Drop	Voltage at Device	% Vdrop Wire Length
1	N1:T4:A2:1-1	PANEL	15	49VO-WRF	15cd	0.0470	2.747	0.253	28.747	Branch 1: 8.18% Length: 855
1	N1:T4:A2:1-2	N1:T4:A2:1-1	25	49MTV-WRF	15cd	0.1450	2.643	0.406	28.341	
1	N1:T4:A2:1-3	N1:T4:A2:1-2	22	49VO-WRF	15cd	0.0470	0.047	0.006	28.335	
1	N1:T4:A2:1-4	N1:T4:A2:1-2	51	49MTV-WRF	15cd	0.1450	0.145	0.045	28.296	
1	TAP9	N1:T4:A2:1-2	18	JBOX		0.0000	2.306	0.255	28.086	
1	N1:T4:A2:1-5	TAP9	18	4906-9202	75cd	0.1800	0.459	0.051	28.036	
1	N1:T4:A2:1-6	N1:T4:A2:1-5	45	4906-9202	75cd	0.1800	0.180	0.050	27.986	
1	N1:T4:A2:1-7	N1:T4:A2:1-1	48	49VO-APPLW	30cd	0.0570	0.057	0.017	28.730	
1	N1:T4:A2:1-8	TAP9	89	4906-9202	75cd	0.1800	1.847	1.009	27.077	
1	N1:T4:A2:1-9	N1:T4:A2:1-8	18	49MTV-WRF	75cd	0.1980	1.109	0.123	26.954	
1	N1:T4:A2:1-10	N1:T4:A2:1-9	56	49MTV-WRF	75cd	0.1980	0.248	0.085	26.869	
1	TAP10	N1:T4:A2:1-9	29	JBOX		0.0000	0.663	0.118	26.836	
1	N1:T4:A2:1-11	TAP10	17	49VO-WRF	15cd	0.0470	0.104	0.011	26.825	
1	N1:T4:A2:1-12	TAP10	15	49VO-WRF	30cd	0.0570	0.057	0.005	26.831	
1	N1:T4:A2:1-13	N1:T4:A2:1-11	17	49VO-WRF	30cd	0.0570	0.057	0.006	26.820	
1	N1:T4:A2:1-14	TAP10	51	49MTV-WRF	30cd	0.1630	0.502	0.157	26.679	
1	TAP11	N1:T4:A2:1-14	10	JBOX		0.0000	0.292	0.018	26.661	
1	N1:T4:A2:1-15	TAP11	27	49MTV-WRF	75cd	0.1980	0.198	0.033	26.628	
1	N1:T4:A2:1-16	TAP11	26	49VO-WRF	15cd	0.0470	0.047	0.008	26.654	
1	N1:T4:A2:1-17	TAP11	20	49VO-WRF	15cd	0.0470	0.047	0.006	26.655	
1	N1:T4:A2:1-18	N1:T4:A2:1-14	28	49VO-WRF	15cd	0.0470	0.047	0.008	26.671	
1	N1:T4:A2:1-19	N1:T4:A2:1-8	10	4906-9202	75cd	0.1800	0.279	0.017	27.060	
1	N1:T4:A2:1-20	N1:T4:A2:1-8	39	4906-9202	75cd	0.1800	0.180	0.043	27.034	
1	N1:T4:A2:1-21	N1:T4:A2:1-5	2	49MT-WRF	520 Hz	0.0990	0.099	0.001	28.034	
1	N1:T4:A2:1-22	N1:T4:A2:1-19	2	49MT-WRF	520 Hz	0.0990	0.099	0.001	27.059	
1	N1:T4:A2:1-23	N1:T4:A2:1-8	2	49MT-WRF	520 Hz	0.0990	0.099	0.001	27.076	
1	N1:T4:A2:1-24	N1:T4:A2:1-10	85	49VO-APPLW	15cd	0.0470	0.050	0.026	26.843	
1	**N1:T4:A2:1-25**	**N1:T4:A2:1-24**	**70**	**4009-9601**		**0.0032**	**0.003**	**0.001**	**26.841**	
E2:1	**N1:T4:A2:1-26**	**EPR2**	**26**	**49MTV-WRF**	**30cd**	**0.1630**	**1.128**	**0.180**	**28.820**	**Branch E2:1: 2.37% Length: 291**
E2:1	**N1:T4:A2:1-27**	**N1:T4:A2:1-26**	**28**	**49VO-APPLC**	**15cd**	**0.0550**	**0.965**	**0.166**	**28.654**	
E2:1	**N1:T4:A2:1-28**	**N1:T4:A2:1-27**	**21**	**49VO-APPLC**	**15cd**	**0.0550**	**0.910**	**0.117**	**28.537**	
E2:1	**N1:T4:A2:1-29**	**N1:T4:A2:1-28**	**29**	**49MTV-WRF**	**15cd**	**0.1450**	**0.345**	**0.061**	**28.475**	
E2:1	**N1:T4:A2:1-30**	**N1:T4:A2:1-29**	**18**	**49MTV-WRF**	**15cd**	**0.1450**	**0.200**	**0.022**	**28.453**	
E2:1	**N1:T4:A2:1-31**	**N1:T4:A2:1-30**	**31**	**49VO-APPLC**	**15cd**	**0.0550**	**0.055**	**0.010**	**28.443**	
E2:1	**N1:T4:A2:1-32**	**N1:T4:A2:1-28**	**22**	**49MTV-WRF**	**15cd**	**0.1450**	**0.510**	**0.069**	**28.468**	
E2:1	**N1:T4:A2:1-33**	**N1:T4:A2:1-32**	**24**	**49VO-APPLC**	**15cd**	**0.0550**	**0.365**	**0.054**	**28.414**	
E2:1	**N1:T4:A2:1-34**	**N1:T4:A2:1-33**	**19**	**49VO-APPLC**	**15cd**	**0.0550**	**0.310**	**0.036**	**28.378**	
E2:1	**N1:T4:A2:1-35**	**N1:T4:A2:1-34**	**25**	**49MTV-WRF**	**15cd**	**0.1450**	**0.255**	**0.039**	**28.339**	
E2:1	**N1:T4:A2:1-36**	**N1:T4:A2:1-35**	**27**	**49VO-APPLC**	**15cd**	**0.0550**	**0.110**	**0.018**	**28.320**	
E2:1	**N1:T4:A2:1-37**	**N1:T4:A2:1-36**	**21**	**49VO-APPLC**	**15cd**	**0.0550**	**0.055**	**0.007**	**28.313**	

N1:T4:A2: ENHANCED POWER SUPPLY - CHANNEL 2

IDNac Address	Device Type	PID	Setting	Custom Label (Max 40 Characters)		SWITCH SETTINGS 1								
N1:T4:A2:2-1	AV	49MTV-WRF	15cd	FLR 1W EQ STG 1-SS131 1:A2:2-1		X								ON
N1:T4:A2:2-2	VO	49VO-APPLW	75cd	FLR 1W CYSTO OR 3 1-SS129 1:A2:2-2			X							ON
N1:T4:A2:2-3	VO	49VO-APPLW	30cd	FLR 1W OR 2 1-SS119 1:A2:2-3		X	X							ON
N1:T4:A2:2-4	VO	49VO-APPLW	30cd	FLR 1W OR 1 1-SS118 1:A2:2-4				X						ON
N1:T4:A2:2-5	AV	49MTV-WRF	15cd	FLR 1W WOMENS LCKR RM 1-SS135 1:A2:2-5		X		X						ON
N1:T4:A2:2-6	VO	49VO-WRF	15cd	FLR 1W WOMENS LCKR RM 1-SS135 1:A2:2-6			X	X						ON
N1:T4:A2:2-7	VO	49VO-WRF	15cd	FLR 1W WOMENS BATH 1-SS136 1:A2:2-7		X	X	X						ON
N1:T4:A2:2-8	AV	49MTV-WRF	30cd	FLR 1W MENS LCKR RM 1-SS138 1:A2:2-8					X					ON
N1:T4:A2:2-9	VO	49VO-WRF	15cd	FLR 1W MENS LCKR RM 1-SS138 1:A2:2-9		X			X					ON
N1:T4:A2:2-10	AV	49MTV-WRF	75cd	FLR 1W NURSE LOUNGE 1-SS139 1:A2:2-10			X		X					ON
N1:T4:A2:2-11	AV	49MTV-WRF	15cd	FLR 1W CORR 1-SS122 @OR 6 1:A2:2-11		X	X		X					ON
N1:T4:A2:2-12	AV	49MTV-WRF	15cd	FLR 1W CORR 1-SS122 @OR 6 1:A2:2-12				X	X					ON
N1:T4:A2:2-13	AV	49MTV-WRF	15cd	FLR 1W CORR 1-SS122 @OR 1 1:A2:2-13		X		X	X					ON
N1:T4:A2:2-14	VO	49VO-WRF	15cd	FLR 1W EQUIP STOR @OR 1 1:A2:2-13			X	X	X					ON
N1:T4:A2:2-15				SPARE		X	X	X	X					ON
N1:T4:A2:2-16	REPEATER	4009-9601		FLR 1W ELEC 1-PA05 1:A2:2-16						X				ON
N1:T4:A2:2-17	VO	49VO-WRF	15cd	FLR 1W ELEC 1-PA05 1:A2:2-17		X				X				ON
N1:T4:A2:2-18	AV	49MTV-WRF	15cd	FLR 1W PASS 1-PA06 1:A2:2-18			X			X				ON
N1:T4:A2:2-19	VO	49VO-WRF	15cd	FLR 1W SOIL UTILITY 1-PA08 1:A2:2-19		X	X			X				ON
N1:T4:A2:2-20	VO	49VO-WRF	15cd	FLR 1W PACU RECOVERY 1-PA01 1:A2:2-20				X		X				ON
N1:T4:A2:2-21	AV	49MTV-WRF	30cd	FLR 1W NURSE STAT A 1-PA10 1:A2:2-21		X		X		X				ON
N1:T4:A2:2-22	AV	49MTV-WRF	15cd	FLR 1W PASS 1-PA11 1:A2:2-27			X	X		X				ON
N1:T4:A2:2-23	VO	49VO-WRF	15cd	FLR 1W CNC OFF 1-PA09 1:A2:2-28		X	X	X		X				ON
N1:T4:A2:2-24	AV	49MTV-WRF	30cd	FLR 1W CL UTILITY 1-PA07 1:A2:2-29					X	X				ON
N1:T4:A2:2-25	VO	49VO-WRF	30cd	FLR 1W PASS 1-PA12 1:A2:2-30		X			X	X				ON
N1:T4:A2:2-26	AV	49MTV-WRF	30cd	FLR 1W STAFF LOUNGE 1-PA14 1:A2:2-31			X		X	X				ON
N1:T4:A2:2-27	VO	49VO-WRF	15cd	FLR 1W TLT 1-PA15 1:A2:2-32		X	X		X	X				ON
N1:T4:A2:2-28	VO	49VO-APPLW	30cd	FLR 1W DAVINCI OR 4 1-SS031 1:A1:1-28				X	X	X				ON
N1:T4:A2:2-29	AV	49MTV-WRF	15cd	FLR 1W HALL 4 1:A2:2-29		X		X	X	X				ON
N1:T4:A2:2-30	AV	49MTV-WRF	15cd	FLR 1W HALL 4 1:A2:2-30			X	X	X	X				ON
N1:T4:A2:2-31	VO	49VO-WRF	15cd	FLR 1W COMM 1-SS216 1:A2:2-31		X	X	X	X	X				ON
N1:T4:A2:2-32	AV	49MTV-WRF	30cd	FLR 1W NURSE LOUNGE 1-SS217 1:A2:2-32							X			ON
N1:T4:A2:2-33	VO	49VO-WRF	15cd	FLR 1W TLT 1-SS22 1:A2:2-33		X					X			ON
N1:T4:A2:2-34	VO	49VO-WRF	15cd	FLR 1W TLT 1-SS218 1:A2:2-34			X				X			ON
N1:T4:A2:2-35	VO	49VO-WRF	15cd	FLR 1W TLT 1-SS219 1:A2:2-35		X	X				X			ON
N1:T4:A2:2-36	VO	49VO-WRF	75cd	FLR 1W PASS. 1-SS224 1:A2:2-36				X			X			ON
N1:T4:A2:2-37	AV	49MTV-WRF	75cd	FLR 1W NURSE STAT C 1-SS223 1:A2:2-37		X		X			X			ON

N1:T4:A2:2 — **Distributed Load Voltage Drop**

Starting Voltage:	29vdc			
Min. Device Voltage:	23.vdc	Primary Wire Gauge: 14ga	Wire Res. Per Ft. 0.003070	@ 75° Celsius
Allowable % Drop:	20.7%	Home Run Wire Gauge: 14ga	Wire Res. Per Ft. 0.003070	@ 75° Celsius

Branch	Device #	From	Distance (Feet)	PID	Setting	Device Draw	Class B Calculations Current at Device	Voltage Drop	Voltage at Device	% Vdrop Wire Length
1	TAP12	PANEL	105	JBOX		0.0000	1.488	0.959	28.041	Branch 1: 4.88% Length: 458
1	N1:T4:A2:2-11	TAP12	18	49MTV-WRF	15cd	0.1450	0.145	0.016	28.025	
1	N1:T4:A2:2-1	TAP12	33	49MTV-WRF	15cd	0.1450	0.696	0.141	27.900	
1	N1:T4:A2:2-2	N1:T4:A2:2-1	31	49VO-APPLW	75cd	0.1000	0.551	0.105	27.795	
1	N1:T4:A2:2-3	N1:T4:A2:2-2	45	49VO-APPLW	30cd	0.0570	0.451	0.125	27.670	
1	N1:T4:A2:2-12	N1:T4:A2:2-3	27	49MTV-WRF	15cd	0.1450	0.145	0.024	27.646	
1	N1:T4:A2:2-4	N1:T4:A2:2-3	37	49VO-APPLW	30cd	0.0570	0.249	0.057	27.614	
1	N1:T4:A2:2-14	N1:T4:A2:2-4	16	49VO-WRF	15cd	0.0470	0.192	0.019	27.595	
1	N1:T4:A2:2-13	N1:T4:A2:2-14	11	49MTV-WRF	15cd	0.1450	0.145	0.010	27.585	
1	N1:T4:A2:2-5	TAP12	19	49MTV-WRF	15cd	0.1450	0.647	0.075	27.965	
1	TAP13	N1:T4:A2:2-5	11	JBOX		0.0000	0.502	0.034	27.931	
1	N1:T4:A2:2-6	TAP13	19	49VO-WRF	15cd	0.0470	0.292	0.034	27.897	
1	N1:T4:A2:2-7	N1:T4:A2:2-6	25	49VO-WRF	15cd	0.0470	0.047	0.007	27.890	
1	N1:T4:A2:2-8	TAP13	19	49MTV-WRF	30cd	0.1630	0.210	0.024	27.907	
1	N1:T4:A2:2-9	N1:T4:A2:2-8	23	49VO-WRF	15cd	0.0470	0.047	0.007	27.900	
1	N1:T4:A2:2-10	N1:T4:A2:2-6	19	49MTV-WRF	75cd	0.1980	0.198	0.023	27.874	
2	N1:T4:A2:2-16	PANEL	232	4009-9601		0.0032	0.003	0.005	28.995	Branch 2: 0.02%
E1:1	N1:T4:A2:2-17	EPR1	18	49VO-WRF	15cd	0.0470	1.128	0.125	28.875	Branch E1:1: 2.53% Length: 357
E1:1	N1:T4:A2:2-18	N1:T4:A2:2-17	25	49MTV-WRF	15cd	0.1450	1.081	0.166	28.709	
E1:1	N1:T4:A2:2-19	N1:T4:A2:2-18	21	49VO-WRF	15cd	0.0470	0.047	0.006	28.703	
E1:1	TAP14	N1:T4:A2:2-18	25	JBOX		0.0000	0.889	0.136	28.573	
E1:1	N1:T4:A2:2-20	TAP14	23	49VO-WRF	15cd	0.0470	0.047	0.007	28.566	
E1:1	N1:T4:A2:2-21	TAP14	29	49MTV-WRF	30cd	0.1630	0.842	0.150	28.423	
E1:1	TAP15	N1:T4:A2:2-21	9	JBOX		0.0000	0.679	0.038	28.385	
E1:1	N1:T4:A2:2-22	TAP15	17	49MTV-WRF	15cd	0.1450	0.412	0.043	28.342	
E1:1	N1:T4:A2:2-23	N1:T4:A2:2-22	14	49VO-WRF	15cd	0.0470	0.267	0.023	28.320	
E1:1	N1:T4:A2:2-24	N1:T4:A2:2-23	25	49MTV-WRF	30cd	0.1630	0.220	0.034	28.286	
E1:1	N1:T4:A2:2-28	N1:T4:A2:2-24	52	49VO-APPLW	30cd	0.0570	0.057	0.018	28.268	
E1:1	N1:T4:A2:2-25	TAP15	55	49VO-WRF	30cd	0.0570	0.267	0.090	28.295	
E1:1	N1:T4:A2:2-26	N1:T4:A2:2-25	13	49MTV-WRF	30cd	0.1630	0.210	0.017	28.279	
E1:1	N1:T4:A2:2-27	N1:T4:A2:2-26	31	49VO-WRF	15cd	0.0470	0.047	0.009	28.270	
3	TAP16	PANEL	104	JBOX		0.0000	0.939	0.600	28.400	Branch 3: 2.74% Length: 299
3	N1:T4:A2:2-29	TAP16	13	49MTV-WRF	15cd	0.1450	0.547	0.044	28.357	
3	N1:T4:A2:2-30	N1:T4:A2:2-29	36	49MTV-WRF	15cd	0.1450	0.402	0.089	28.268	
3	N1:T4:A2:2-31	N1:T4:A2:2-30	14	49VO-WRF	15cd	0.0470	0.257	0.022	28.246	
3	N1:T4:A2:2-32	N1:T4:A2:2-31	24	49MTV-WRF	30cd	0.1630	0.210	0.031	28.215	
3	N1:T4:A2:2-33	N1:T4:A2:2-32	28	49VO-WRF	15cd	0.0470	0.047	0.008	28.207	
3	N1:T4:A2:2-34	TAP16	33	49VO-WRF	15cd	0.0470	0.392	0.079	28.321	
3	N1:T4:A2:2-35	N1:T4:A2:2-34	13	49VO-WRF	15cd	0.0470	0.345	0.028	28.293	
3	N1:T4:A2:2-36	N1:T4:A2:2-35	21	49VO-WRF	75cd	0.1000	0.298	0.038	28.255	
3	N1:T4:A2:2-37	N1:T4:A2:2-36	13	49MTV-WRF	75cd	0.1980	0.198	0.016	28.239	

N1:T4:A2: ENHANCED POWER SUPPLY - CHANNEL 3

IDNac Address	Device Type	PID	Setting	Custom Label (Max 40 Characters)		SWITCH SETTINGS 1								
N1:T4:A2:3-1				SPARE		X								ON
N1:T4:A2:3-2				SPARE			X							ON
N1:T4:A2:3-3				SPARE		X	X							ON
N1:T4:A2:3-4				SPARE				X						ON
N1:T4:A2:3-5				SPARE		X		X						ON
N1:T4:A2:3-6				SPARE			X	X						ON
N1:T4:A2:3-7				SPARE		X	X	X						ON
N1:T4:A2:3-8				SPARE					X					ON
N1:T4:A2:3-9				SPARE		X			X					ON
N1:T4:A2:3-10	AV	49MTV-WRF	15cd	FLR 1W HALL 3 1:A2:3-1			X		X					ON
N1:T4:A2:3-11	AV	49MTV-WRF	15cd	FLR 1W HALL 3 1:A2:3-11		X	X		X					ON
N1:T4:A2:3-12	VO	49VO-WRF	15cd	FLR 1W PASS. 1-SS24 1:A2:3-12				X	X					ON
N1:T4:A2:3-13	VO	49VO-WRF	15cd	FLR 1W STORE RM 1-SS21 1:A2:3-13		X		X	X					ON
N1:T4:A2:3-14	AV	49MTV-WRF	30cd	FLR 1W PASS. 1-SS204 1:A2:3-14			X	X	X					ON
N1:T4:A2:3-15	VO	49VO-WRF	15cd	FLR 1W TLT 1-SS203 1:A2:3-15		X	X	X	X					ON
N1:T4:A2:3-16	VO	49VO-WRF	30cd	FLR 1W PASS 1-SS212 1:A2:3-16						X				ON
N1:T4:A2:3-17	VO	49VO-WRF	15cd	FLR 1W PASS. 1-SS204 1:A2:3-17		X				X				ON
N1:T4:A2:3-18	AV	49MTV-WRF	15cd	FLR 1W PASS. 1-SS201 1:A2:3-18			X			X				ON
N1:T4:A2:3-19	AV	49MTV-WRF	30cd	FLR 1W WK. RM 1-SS215 1:A2:3-19		X	X			X				ON
N1:T4:A2:3-20	VO	49VO-WRF	15cd	FLR 1W LN. UTIL. 1-SS214 1:A2:3-2				X		X				ON
N1:T4:A2:3-21	VO	49VO-WRF	15cd	FLR 1W SOIL UTIL. 1-SS208 1:A2:3-21		X		X		X				ON
N1:T4:A2:3-22	VO	49VO-WRF	15cd	FLR 1W MEDS 1-SS207 1:A2:3-22			X	X		X				ON
N1:T4:A2:3-23	AV	49MTV-WRF	75cd	FLR 1W SECTY 1-SS211 1:A2:3-23		X	X	X		X				ON
N1:T4:A2:3-24	VO	49VO-WRF	15cd	FLR 1W TLT 1-SS206 1:A2:3-24					X	X				ON
N1:T4:A2:3-25	AV	49MTV-WRF	30cd	FLR 1W PASS 1-SS212 1:A2:3-26		X			X	X				ON
N1:T4:A2:3-26	VO	49VO-WRF	15cd	FLR 1W TLT 1-SS221 1:A2:3-26			X		X	X				ON
N1:T4:A2:3-27	VO	49VO-WRF	15cd	FLR 1W NOUR 1-SS222 1:A2:3-27		X	X		X	X				ON

N1:T4:A2:3 — **Distributed Load Voltage Drop**

Starting Voltage:	29vdc			
Min. Device Voltage:	23.vdc	Primary Wire Gauge: 14ga	Wire Res. Per Ft. 0.003070	@ 75° Celsius
Allowable % Drop:	20.7%	Home Run Wire Gauge: 14ga	Wire Res. Per Ft. 0.003070	@ 75° Celsius

Branch	Device #	From	Distance (Feet)	PID	Setting	Device Draw	Class B Calculations Current at Device	Voltage Drop	Voltage at Device	% Vdrop Wire Length
1	TAP17	PANEL	118	JBOX		0.0000	1.649	1.195	27.805	Branch 1: 5.24% Length: 535
1	N1:T4:A2:3-10	TAP17	19	49MTV-WRF	15cd	0.1450	0.698	0.081	27.724	
1	N1:T4:A2:3-11	N1:T4:A2:3-10	33	49MTV-WRF	15cd	0.1450	0.553	0.112	27.612	
1	N1:T4:A2:3-12	N1:T4:A2:3-11	20	49VO-WRF	15cd	0.0470	0.408	0.050	27.562	
1	N1:T4:A2:3-13	N1:T4:A2:3-12	14	49VO-WRF	15cd	0.0470	0.047	0.004	27.558	
1	N1:T4:A2:3-14	N1:T4:A2:3-12	28	49MTV-WRF	30cd	0.1630	0.314	0.054	27.508	
1	N1:T4:A2:3-15	N1:T4:A2:3-14	24	49VO-WRF	15cd	0.0470	0.047	0.007	27.501	
1	N1:T4:A2:3-16	N1:T4:A2:3-14	31	49VO-WRF	30cd	0.0570	0.104	0.020	27.488	
1	N1:T4:A2:3-17	N1:T4:A2:3-16	24	49VO-WRF	15cd	0.0470	0.047	0.007	27.481	
1	N1:T4:A2:3-18	TAP17	25	49MTV-WRF	15cd	0.1450	0.951	0.146	27.659	
1	N1:T4:A2:3-19	N1:T4:A2:3-18	13	49MTV-WRF	30cd	0.1630	0.210	0.017	27.643	
1	N1:T4:A2:3-20	N1:T4:A2:3-19	18	49VO-WRF	15cd	0.0470	0.047	0.005	27.637	
1	N1:T4:A2:3-21	N1:T4:A2:3-18	19	49VO-WRF	15cd	0.0470	0.094	0.011	27.648	
1	N1:T4:A2:3-22	N1:T4:A2:3-21	19	49VO-WRF	15cd	0.0470	0.047	0.005	27.643	
1	TAP18	N1:T4:A2:3-18	19	JBOX		0.0000	0.502	0.059	27.601	
1	N1:T4:A2:3-23	TAP18	25	49MTV-WRF	75cd	0.1980	0.245	0.038	27.563	
1	N1:T4:A2:3-24	N1:T4:A2:3-23	13	49VO-WRF	15cd	0.0470	0.047	0.004	27.559	
1	N1:T4:A2:3-25	TAP18	30	49MTV-WRF	30cd	0.1630	0.257	0.047	27.553	
1	N1:T4:A2:3-26	N1:T4:A2:3-25	20	49VO-WRF	15cd	0.0470	0.047	0.006	27.548	
1	N1:T4:A2:3-27	N1:T4:A2:3-25	23	49VO-WRF	15cd	0.0470	0.047	0.007	27.547	

City of Aurora Building Division
Reviewed for Code Compliance
By: M. Apodaca
Date: March 25, 2021
2015 INTERNATIONAL CODES & 2020 NEC

Johnson Controls
DISTRICT - 419
14200 E. EXPOSITION AVE
AURORA, CO 80012
SERVICE: 303-355-0500
PHONE: 303-355-0500
FAX: 303-355-0615

NICET CERTIFICATION INFORMATION
NANCY S. WILTSIE
NICET Fire Alarm, III
Certification #93727
Valid Through: 03/01/24
Nancy S Wiltsie
March 24,2021

THE MEDICAL CENTER OF AURORA NEW MRI

THE MEDICAL CENTER OF AURORA
1501 SOUTH POTOMAC STREET
AURORA, COLORADO 80012

ISSUE LOG: Revisions shown with symbol

MARK	DATE	CAD	CHK	DESCRIPTION
3	03/23/2021	CBR	NSW	PER CITY AND STATE COMMENTS DATED 03/10/2021 THROUGH 03/17/2021
2	03/04/2021	NSW	JRE	REMOVE DUCT DETECTORS FROM GENERAL ALARM
1	02/26/2021	NSW	JRE	PER AHJ COMMENTS DATED 02/26/2021

FOR PERMIT

DRAWN BY:	CBR
CHECKED BY:	NSW
ISSUE DATE:	2/21/21
JOB #:	
PROJECT #:	419:619975503

JOHNSON CONTROLS © 2021

SYSTEM: **FIRE ALARM SYSTEM**

SHEET: **TRANSPONDER 4 CALCULATIONS & SCHEDULES (CONT)**

FA-604

FILE PATH: C:\Users\jrauchc\Johnson Controls\Project Electronics - 1501 S Potomac - Aurora South\South Tower - Node 1\28-MRI - 2021 - 619975503\Fire\FA-601.dwg
LAST SAVED BY: JRAUCHC
LAST PRINTED: 3/24/2021 11:52:10 AM
30" x 42" - Arch E1 Size

© Johnson Controls 2021. All rights reserved. Reuse, copying, modification or alteration of the drawings and other information contained herein is strictly prohibited.

PANEL BACKBOX INSTALLATION

SIMPLEX 4009 IDNAC REPEATER

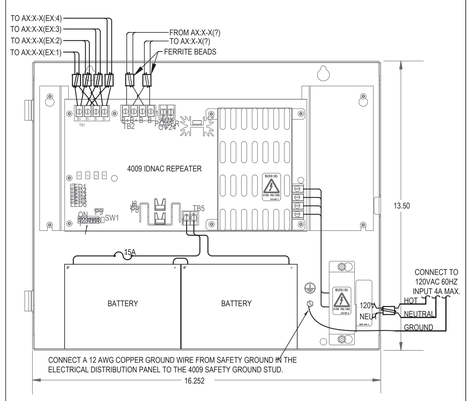

STANDARD SENSOR BASE

SIMPLEX 4098-9792

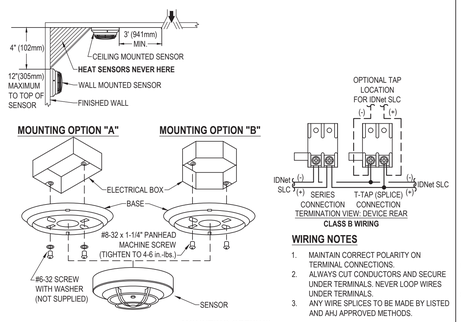

WIRING NOTES

1. MAINTAIN CORRECT POLARITY ON TERMINAL CONNECTIONS.
2. ALWAYS CUT CONDUCTORS AND SECURE UNDER TERMINALS. NEVER LOOP WIRES UNDER TERMINALS.
3. ANY WIRE SPLICES TO BE MADE BY LISTED AND AHJ APPROVED METHODS.

MOUNTING OPTIONS

OPTION [1]	DESCRIPTION	NOTE
A	SINGLE GANG BOX, 2-1/8" (54mm) DEEP - FLUSH MOUNT	BY OTHERS
B	4" (102mm) OCTAGONAL BOX, 1-1/2" (38mm) DEEP, MINIMUM - FLUSH MOUNT	BY OTHERS
C	4" (102mm) SQUARE BOX, 1-1/2" DEEP (MIN) W/ SIMPLEX 4098-9832 ADAPTER KIT	BOX BY OTHERS, 4098-9832 ORDERED SEPARATELY
D	4" (102mm) SQUARE BOX, 1-1/2" DEEP (MIN) W/ SINGLE GANG COVER PLATE 3/4" (19mm) EXTENSION	BY OTHERS

1. FOR ADDITIONAL MOUNTING OPTIONS, DOWNLOAD DATA SHEET 4098-0019 FROM HTTP://WWW.SIMPLEX-FIRE.COM

True*Sense* 3.5% SMOKE SENSOR

SIMPLEX 4098-9605 SENSOR WITH 4098-9788 BASE

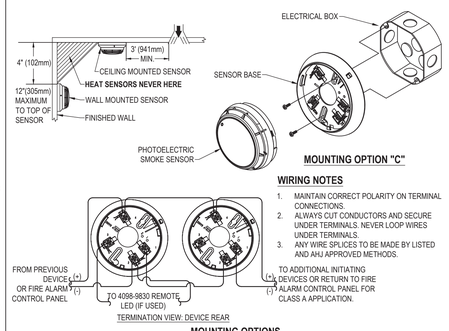

WIRING NOTES

1. MAINTAIN CORRECT POLARITY ON TERMINAL CONNECTIONS.
2. ALWAYS CUT CONDUCTORS AND SECURE UNDER TERMINALS. NEVER LOOP WIRES UNDER TERMINALS.
3. ANY WIRE SPLICES TO BE MADE BY LISTED AND AHJ APPROVED METHODS.

MOUNTING OPTIONS

OPTION [1]	DESCRIPTION	NOTE
A	SINGLE GANG BOX, 2-1/8" (54mm) DEEP	BY OTHERS
B	4" (102mm) SQUARE BOX, 1-1/2" DEEP (MIN) W/ SINGLE GANG COVER PLATE 3/4" (19mm) EXTENSION	BY OTHERS
C	4" (102mm) OCTAGONAL BOX, 1-1/2" (38mm) DEEP. MINIMUM	BY OTHERS
D	4" (102mm) SQUARE BOX, 1-1/2" DEEP (MIN) W/ SIMPLEX 4098-9832 ADAPTER KIT	BOX BY OTHER, 4098-9832 ORDERED SEPARATELY

1. FOR ADDITIONAL MOUNTING OPTIONS, DOWNLOAD DATA SHEET 4098-0015 FROM HTTP://WWW.SIMPLEX-FIRE.COM

ADDRESSABLE INPUT MODULE

SIMPLEX 4090-9001 (IAM)

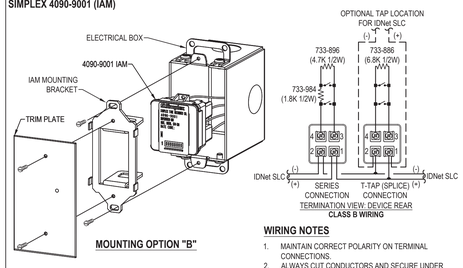

WIRING NOTES

1. MAINTAIN CORRECT POLARITY ON TERMINAL CONNECTIONS.
2. ALWAYS CUT CONDUCTORS AND SECURE UNDER TERMINALS. NEVER LOOP WIRES UNDER TERMINALS.
3. ANY WIRE SPLICES TO BE MADE BY LISTED AND AHJ APPROVED METHODS.

MOUNTING OPTIONS

OPTION [1]	DESCRIPTION	NOTE
A	SINGLE GANG BOX, 2-1/2" (64mm) DEEP WITH SINGLE GANG COVER PLATE	BY OTHERS
B	SINGLE GANG BOX, 2-1/2" (64mm) DEEP WITH SIMPLEX 4090-9810 IAM MOUNTING BRACKET AND SIMPLEX 4090-9806 TRIM PLATE FOR SEMI-FLUSH MOUNTED BOX	BOX BY OTHERS, PLATES ORDERED SEPARATELY
C	SINGLE GANG BOX, 2-1/2" (64mm) DEEP WITH SIMPLEX 4090-9810 IAM MOUNTING BRACKET AND SIMPLEX 4090-9807 TRIM PLATE FOR SURFACE MOUNTED BOX.	BOX BY OTHERS, PLATES ORDERED SEPARATELY

1. FOR ADDITIONAL MOUNTING OPTIONS, DOWNLOAD DATA SHEET 4090-0001 FROM HTTP://WWW.SIMPLEX-FIRE.COM

ADDRESSABLE MODULE MOUNTING BRACKET

SPACE AGE YJ1263

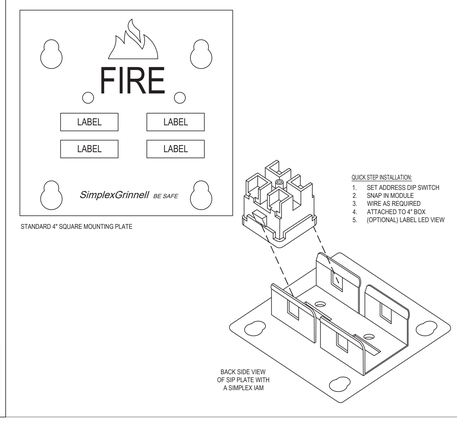

True*Alert* ES ADDRESSABLE APPLIANCES

SIMPLEX 49MTV SERIES WALL MOUNTED MULTI-TONE AUDIBLE / VISUAL

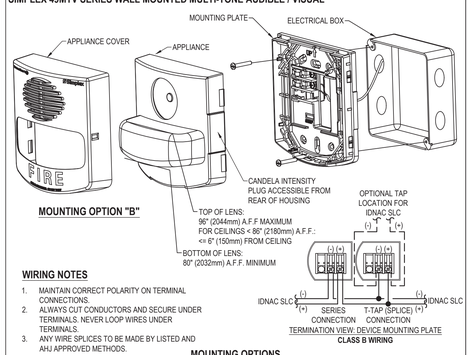

WIRING NOTES

1. MAINTAIN CORRECT POLARITY ON TERMINAL CONNECTIONS.
2. ALWAYS CUT CONDUCTORS AND SECURE UNDER TERMINALS. NEVER LOOP WIRES UNDER TERMINALS.
3. ANY WIRE SPLICES TO BE MADE BY LISTED AND AHJ APPROVED METHODS.

MOUNTING OPTIONS

OPTION [1]	DESCRIPTION	NOTE
A	SINGLE GANG OR DOUBLE GANG BOX, 1-1/2" (38mm) MINIMUM DEPTH	BY OTHERS
B	4" (102mm) SQUARE BOX, 1-1/2" (38mm) MINIMUM DEPTH	BY OTHERS
C	SIMPLEX 2975-9145, 7-7/8"H x 5-1/8"W x 2-3/4"D (127mm x 98mm x 56mm) REQUIRES 4905-9931 PLATE	ORDERED SEPARATELY

1. FOR ADDITIONAL MOUNTING OPTIONS, DOWNLOAD DATA SHEET S49MTV-0001 FROM HTTP://WWW.SIMPLEX-FIRE.COM

True*Alert* ES ADDRESSABLE APPLIANCES

SIMPLEX 49VO / 49VOH SERIES CEILING MOUNTED VISUAL ONLY

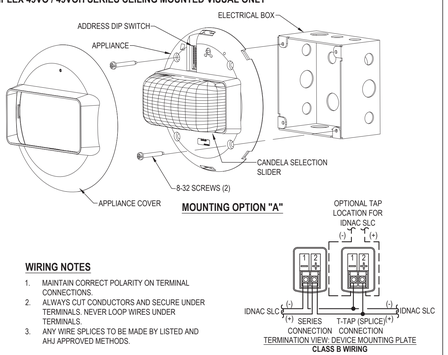

WIRING NOTES

1. MAINTAIN CORRECT POLARITY ON TERMINAL CONNECTIONS.
2. ALWAYS CUT CONDUCTORS AND SECURE UNDER TERMINALS. NEVER LOOP WIRES UNDER TERMINALS.
3. ANY WIRE SPLICES TO BE MADE BY LISTED AND AHJ APPROVED METHODS.

MOUNTING OPTIONS

OPTION [1]	DESCRIPTION	NOTE
A	4" SQUARE ELECTRICAL BOX, 1-1/2" (39mm) MINIMUM DEPTH	BY OTHERS
B	SINGLE GANG ELECTRICAL BOX, 1-1/2" (39mm) MINIMUM DEPTH, WITH 49VO-APCS ADAPTER PLATE	BOX BY OTHERS, SIMPLEX ADAPTER PLATE

1. FOR ADDITIONAL MOUNTING OPTIONS, DOWNLOAD DATA SHEET S49VOC-0001 FROM HTTP://WWW.SIMPLEX-FIRE.COM

This sheet of drawings has not been reviewed for code compliance.

Johnson Controls
DISTRICT 1-418
10500 E. corporation AVE
AURORA, CO 80017
SERVICE: 303-355-6000
PHONE: 303-355-5000
FAX: 303-355-5015

NICET CERTIFICATION INFORMATION

NANCY S. WILTSIE
NICET Fire Alarm, III
Certification #93727
Valid Through: 03/01/24

March 24,2021

THE MEDICAL CENTER OF AURORA
NEW MRI

THE MEDICAL CENTER OF AURORA
1501 SOUTH POTOMAC STREET
AURORA, COLORADO 80012

Revisions shown with ▲ symbol

ISSUE LOG MARK	DATE	CAD	CHK	DESCRIPTION
3	03/17/2021	CBR	NSW	PER AHJ STATE COMMENTS DATED 03/10/2021 THROUGH 03/17/2021
2	03/04/2021	NSW	JRE	REMOVE DUCT DETECTORS FROM GENERAL ALARM
1	02/26/2021	NSW	JRE	PER AHJ COMMENTS DATED 02/26/2021

FOR PERMIT

DRAWN BY:	CBR
CHECKED BY:	NSW
ISSUE DATE:	2/21/21
JOB #:	
PROJECT #:	419-619975503

JOHNSON CONTROLS © 2021

SYSTEM:
FIRE ALARM SYSTEM

SHEET:
TYPICAL DEVICE WIRING

FA-701

© Johnson Controls 2021. All rights reserved. Reuse, copying, modification or alteration of the drawings and other information contained herein is strictly prohibited.

FILE PATH: C:\Users\jrauch\Johnson Controls\Project Electronics - Aurora South\South Tower - Node 128.MRI - 2021 - 619975503\Fire\FA-701.dwg
LAST SAVED BY: JWILTSN
LAST PRINTED: 3/24/2021 11:52:15 AM
30" x 42" - Arch E1 Size

GENERAL NOTES:

1. THIS 36"X48" STATIC GRAPHIC MAP IS NOT SHOWN TO SCALE.

AS OF: 02/23/2021

THE MEDICAL CENTER OF AURORA

1501 S. POTOMAC ST
AURORA, COLORADO 80012

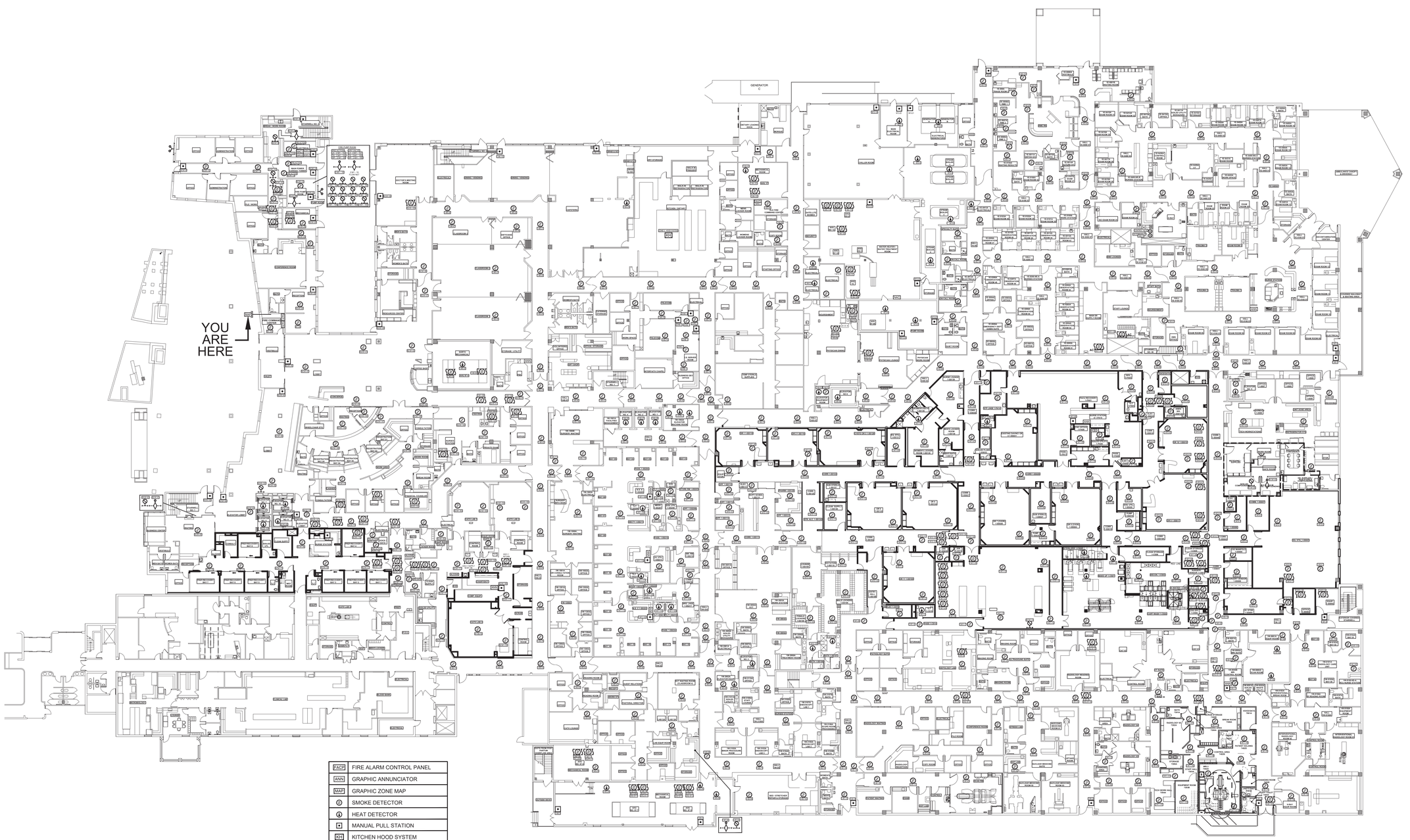

FACP	FIRE ALARM CONTROL PANEL
ANN	GRAPHIC ANNUNCIATOR
MAP	GRAPHIC ZONE MAP
	SMOKE DETECTOR
	HEAT DETECTOR
	MANUAL PULL STATION
KH	KITCHEN HOOD SYSTEM
	SPRINKLER WATERFLOW VALVE
	SPRINKLER TAMPER SWITCH
	DUCT DETECTOR
	FIRE DEPARTMENT CONNECTION
	FIRE HYDRANT

Johnson Controls
AURORA (303) 355-0500

This sheet of drawings has not been reviewed for code compliance.

The Medical Center of Aurora
Health ONE

Johnson Controls
DISTRICT - 119
14200 E. EXPOSITION AVE
AURORA, CO 80012
SERVICE: 303-355-0500
PHONE: 303-355-0500
FAX: 303-355-0615

NICET CERTIFICATION INFORMATION

NANCY S. WILTSIE
NICET Fire Alarm, III
Certification #93727
Valid Through: 03/01/24

Nancy S Wiltsie
March 24,2021

THE MEDICAL CENTER OF AURORA
NEW MRI

THE MEDICAL CENTER OF AURORA
1501 SOUTH POTOMAC STREET
AURORA, COLORADO 80012

Revisions shown with symbol

ISSUE LOG: MARK	DATE	CAD	CHK	DESCRIPTION
3	03/23/2021	CBR	NSW	PER CITY AND STATE COMMENTS DATED 03/10/2021 THROUGH 03/17/2021
2	03/04/2021	NSW	JRE	REMOVE DUCT DETECTORS FROM GENERAL ALARM
1	02/26/2021	NSW	JRE	PER AHJ COMMENTS DATED 02/26/2021

FOR PERMIT

DRAWN BY:	CBR
CHECKED BY:	NSW
ISSUE DATE:	2/21/21
JOB #:	
PROJECT #:	419:619975503

JOHNSON CONTROLS © 2021

SYSTEM:
FIRE ALARM SYSTEM

SHEET:
GRAPHIC MAP AT FIRE COMMAND CENTER 1C-1013A

FA-801

FILE PATH: C:\Users\jrauch\Johnson Controls\Project Electronics - 1501 S Potomac - Aurora South\South Tower - Node 1/28-MRI - 2021 - 619975503\Fire\FA-001.dwg
LAST SAVED BY: JRAUCHC
LAST PRINTED: 3/24/2021 11:52:24 AM
30" x 42" - Arch E1 Size

© Johnson Controls 2021. All rights reserved. Reuse, copying, modification or alteration of the drawings and other information contained herein is strictly prohibited.

Johnson Controls
14200 E. Exposition Avenue
Aurora, Colorado 80012

www.simplexgrinnell.com

Tele: (303) 355-0500
Fax: (303) 355-0615

Fire Alarm
Product Data Submittal for:

THE MEDICAL CENTER OF AURORA
NEW MRI
1501 SOUTH POTOMAC STREET
DENVER, COLORADO 80012

Prepared for:

E LIGHT ELECTRIC SERVICES, INCORPORATED
361 INVERNES DRIVE, SUITE B
ENGLEWOOD, COLORADO 80112

Johnson Controls
14200 E. Exposition Avenue
Aurora, Colorado 80012
Sales: (303) 355-0500
Service: (303) 355-0500
Fax: (303) 355-0615

PROJECT:	THE MEDICAL CENTER OF AURORA NEW MRI
PREPARED FOR:	E LIGHT ELECTRIC SERVICES, INCORPORATED

TYPE:	***DESCRIPTION:***
4009-9601	IDNAC REPEATER 120V PLATINUM UL/ULC
2081-9272	BATTERIES - 6.2AH (2x)
4098-9714	TRUEALARM PHOTO SMOKE SENSOR
4098-9733	TRUEALARM HEAT SENSOR
4098-9792	TRUEALARM SENSOR BASE
4098-9605	PHOTO SMOKE DETECTOR SSD
4098-9788	2 WIRE DETECTOR BASE
4090-9001	IDNET SUPERVISED IAM
YJ1263	BRACKET/COVR IAM 2-GANG RED
4081-9004	EOL, 6.8K 1/2W
49MTV-WRF	MULTI-TONE A/V, RED, WALL MOUNT
49VO-APPLC	VO APPLIANCE ONLY CEIL MT
49VOC-CWF	VO COVER, CEIL MT, WHITE, FIRE
49VO-APCS	VO CEIL MT ADAPTER PLATE
SSU00660	32PT TERMINAL CABINET

RSN: 1523729
Permit # 2021-1939814-LT
Sheet 14 of 51

Simplex

*UL, ULC, CSFM Listed; FM Approved; MEA (NYC) Acceptance**

TrueAlert Addressable Notification

4009 IDNAC Repeater; Power and Distance Extender

Features

4009 IDNAC Repeaters provide enhanced power delivery to TrueAlert/TrueAlert ES addressable notification appliances controlled by IDNAC SLCs:

- Output voltage in alarm is maintained by an efficient switching regulator at 29 VDC during both AC input and battery backup conditions allowing strobes to operate at lower current
- With lower current strobes and regulated output voltage, wiring distance can be extended 2 to 3 times that of conventional notification, appliance loading can be increased, or smaller wire gauge can be used, all resulting in *installation savings* with high assurance that appliances that operate during normal system testing will operate during worst case alarm conditions

4009 IDNAC Repeaters receive an IDNAC SLC input and provide a repeated 3 A SLC output to extend SLC distance and power:

- Appliance control and address limit remains with the host IDNAC control panel. Repeater status is communicated to the control panel for system diagnostics and also locally indicated
- Repeater output extends supervisory capacity by up to 139 additional unit loads or 3 A
- Input SLC connection can be Class B or Class A
- Repeater output can be a Class A loop or a Class B output with internal connections for up to four (4) T-tapped output branches (Class A output requires 4009-9814 Class A Adapter)
- Operation requires one IDNAC SLC address; Repeaters can be connected as one in series, or up to five (5) in parallel
- AC power input is 120 VAC or 220-240 VAC, 50/60 Hz, auto-select
- An on-board battery charger is provided with low AC battery disconnect selectable per Repeater (required for ULC listed applications)
- Operation is compatible with TrueAlert ES and TrueAlert addressable notification appliances and accessories
- Available with platinum or red cabinet
- Listed to UL 864 and ULC S527

Multiple wiring options are available:

- Wiring options include Class B multiple branch (up to 4) output, Class A loop extension, and Class A riser to Class B branches or a Class A loop output
- When the Repeater is part of a Class A loop from the IDNAC SLC source panel, up to twice the distance for the loop is available; (Class A loop repeating requires 4009-9814 Class A Adapter)

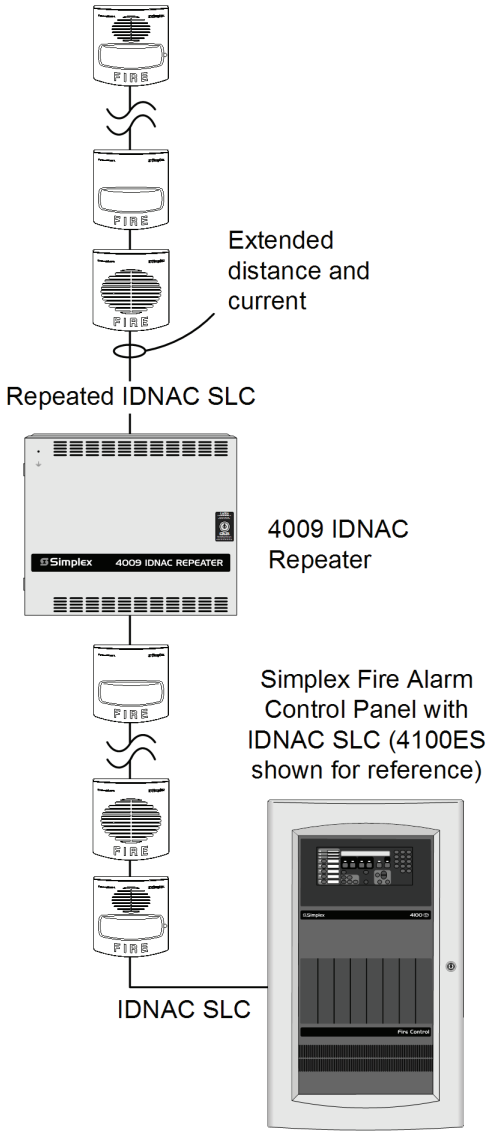

Figure 1: 4009 IDNAC Repeater Extends Distance and Current of IDNAC SLC

Class A Adapter 4009-9814:

- Required when extending a Class A loop or to provide a Class A local loop SLC output
- Operation provides short circuit isolation between input and output terminals for improved IDNAC SLC survivability

Built-in battery Charger

- Power supply charges up to 12.7 Ah batteries for in cabinet mounting and up to 25 Ah batteries with model 4009-9801 external battery cabinet

Available auxiliary output:

- A 200 mA, 29 VDC constant auxiliary output is available; operation is maintained during battery backup

* This product has been approved by the California State Fire Marshal (CSFM) pursuant to Section 13144.1 of the California Health and Safety Code. See CSFM Listing 7165 0026:0378 for allowable values and/or conditions concerning material presented in this document. NYC Fire Dept COA #6151. Additional listings may be applicable; contact your local Simplex product supplier for the latest status. Listings and approvals under Simplex Time Recorder Co. are the property of Tyco Fire Protection Products.

Introduction

Repeating IDNAC SLCs

Simplex fire alarm control panels with IDNAC SLC outputs provide individual address and control of TrueAlert and TrueAlert ES addressable notification appliances. When an IDNAC SLC reaches the current limit or the distance limit of the source IDNAC SLC, use of 4009 IDNAC Repeaters extends the IDNAC SLC with an additional 3 A of SLC current and up to 139 unit loads of additional supervisory capacity.

With IDNAC SLCs, a constant 29 VDC source voltage is maintained in alarm, even during battery standby, allowing strobes to operate at higher voltage with lower current and ensuring a consistent current draw and voltage drop margin under both primary power and secondary battery standby. Efficiencies include wiring distances up to 2 to 3 times farther than with conventional notification, or support for more appliances per IDNAC SLC, or use of smaller gauge wiring, or combinations of these benefits, all providing installation and maintenance savings with high assurance that appliances that operate during normal system testing will operate during worst case alarm conditions.

Description

Three wiring configurations

Three wiring configurations are available to provide a variety of system solutions: Class B branch extension, Class A loop extension, and Class A riser to Class B branch extension or Class A loop output.

Class B branch input wiring

Class B branch input wiring allows T-tapped connections to up to five (5) parallel connected 4009 IDNAC Repeaters. Each Repeater has on-board output terminal connections for up to four (4) output branch circuits, and additional branch circuits can be externally T-tapped as required. (Refer to Wiring Reference, Class B Input with Class B Branch Circuit Outputs for additional details.)

Class A loop extensions use a single 4009 IDNAC Repeater to extend the current and distance of a single Class A loop allowing the loop distance to be doubled.

The Repeater communicates and repeats bi-directionally allowing Class A loop operation to be maintained in the event of an open circuit. This wiring connection requires use of the 4009-9814 Class A adapter. (Refer to Wiring Reference, Class A Loop Extension for additional details.)

Class A Riser to Class B Branches or Class A Loops

For applications requiring a combination of wiring types, a Class A riser can drive up to five (5) 4009 IDNAC Repeaters with each Repeater capable of driving either single or multiple Class B branch output(s) or a Class A loop output. In this wiring application, the Repeater does not repeat in the Class A riser loop, it is connected as an appliance with Class A in/out wiring. To create a Class A loop output, the Repeater must be equipped with a 4009-9814 Class A Adapter. (Refer to Wiring Reference, Class A Riser Input with Class A Loop and Class B Branch Outputs for additional details.)

Product Selection

Table 1: IDNAC Repeater Selection

Model*	Cabinet Color	Description
4009-9601(BA)	Platinum	4009 IDNAC Repeater with cabinet; provides a single 3 A IDNAC SLC output, 200 mA auxiliary power output, and battery charger; 120/240 VAC, 50/60 Hz input, auto-select
4009-9602(BA)	Red	
* Model numbers ending with BA suffix are assembled in the USA.		

Table 2: Aftermarket Accessories (installed on-site, select per system requirements)

Model	Description	
4009-9814	Class A Adapter Module, mounts on repeater controller board; required for Class A output	
2975-9813	Platinum semi-flush box trim	1 $^{7}/_{16}$" (37 mm) wide, four corners and trim pieces for top, bottom, and sides; (will need to be cut to fit 4009 IDNAC Repeater cabinet)
2975-9812	Red semi-flush box trim	

Table 3: External Accessories (select per system requirements)

Model	Description	Comments
4905-9929	Remote TrueAlert Communications Isolator	Refer to data sheet *S4905-0001* for details
4009-9801	External Battery Cabinet for 25 Ah batteries	16 ¼" W x 13 ½" H x 5 ¾" D (413 mm x 343 mm x 146 mm); refer to data sheet *S2081-0006* for details

Table 4: Battery Selection (select battery size per system requirements; two batteries are required for 24 VDC operation)

Model	Description	
2081-9272	6.2 Ah Battery, 12 VDC	
2081-9274	10 Ah Battery, 12 VDC	
2081-9288	12.7 Ah Battery, 12 VDC	
2081-9275	18 Ah Battery, 12 VDC	Requires 4009-9801 External Battery Cabinet
2081-9287	25 Ah Battery, 12 VDC	

Wiring Reference, Class B Input with Class B Branch Circuit Outputs

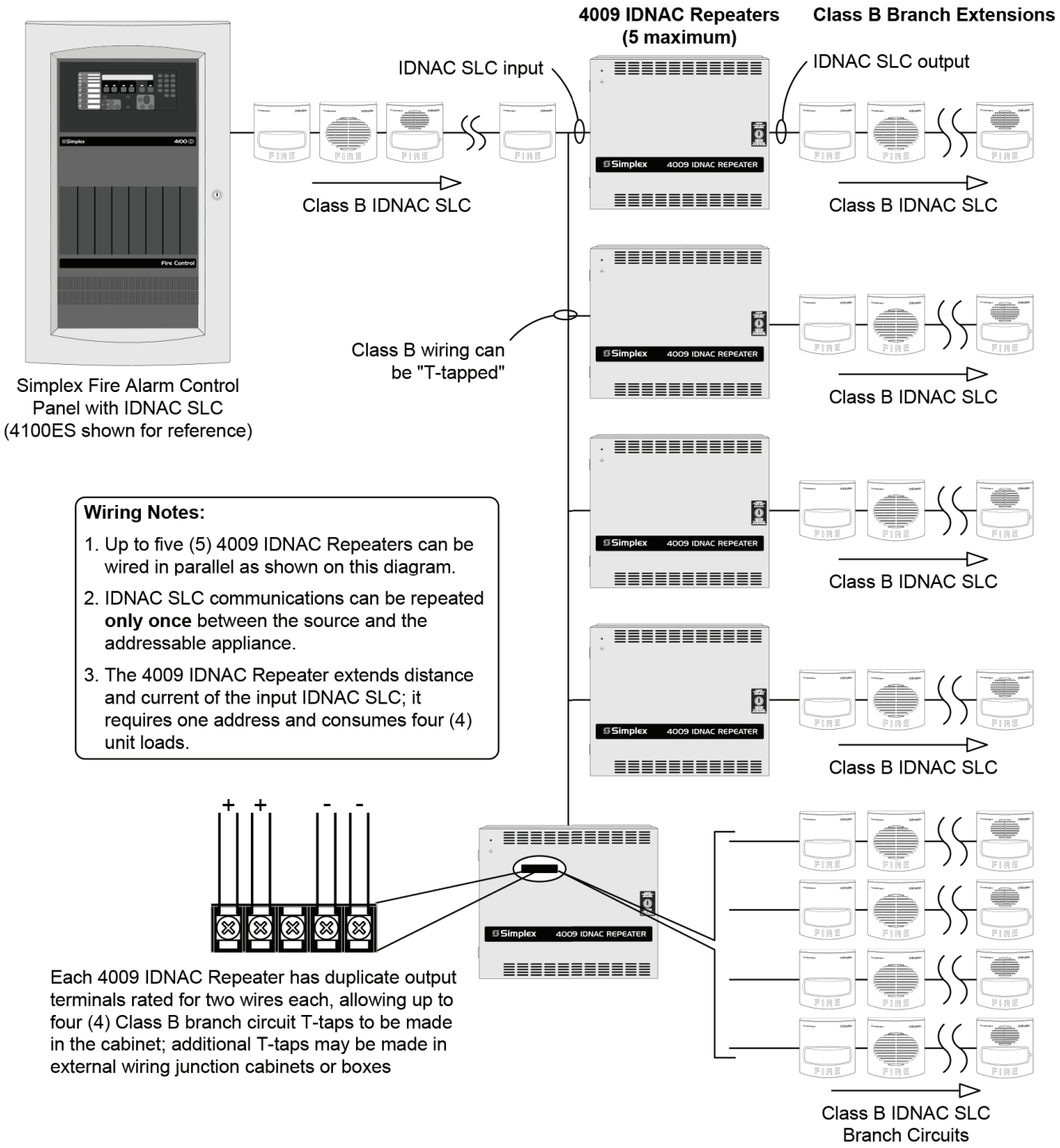

Figure 2: Wiring Reference

Wiring Reference, Class A Loop Extension

Class A IDNAC SLC Loop with 4009 IDNAC Repeater Extending Loop Range and Power

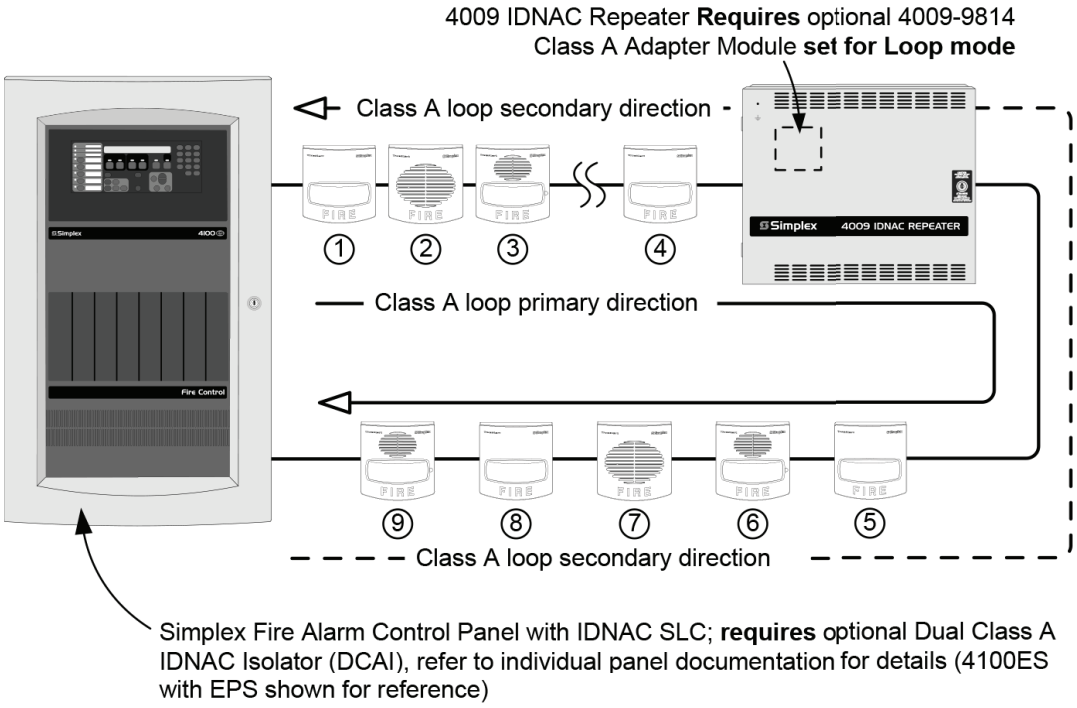

Notes:

1. Only one 4009 IDNAC Repeater can be wired in a Class A loop. (IDNAC SLC communications can be repeated **only once** between the source and the addressable appliance.)
2. The 4009 IDNAC Repeater extends distance and current of the Class A IDNAC SLC loop; it requires one address and consumes four (4) unit loads.
3. Under normal operating conditions (no open circuit wiring), appliances 1 through 4 are powered by the Panel Power Supply and appliances 5 through 9 are powered from the 4009 IDNAC Repeater.
4. Under open circuit conditions, an open circuit in the panel side of the primary path will result in the Panel Power Supply powering appliances 5 through 9 and the 4009 IDNAC Repeater will receive IDNAC SLC input from the return path and then power appliances 1 through 4, or as many as remain connected.

Figure 3: Wiring Reference

Wiring Reference, Class A Riser Input with Class A Loop and Class B Branch Outputs

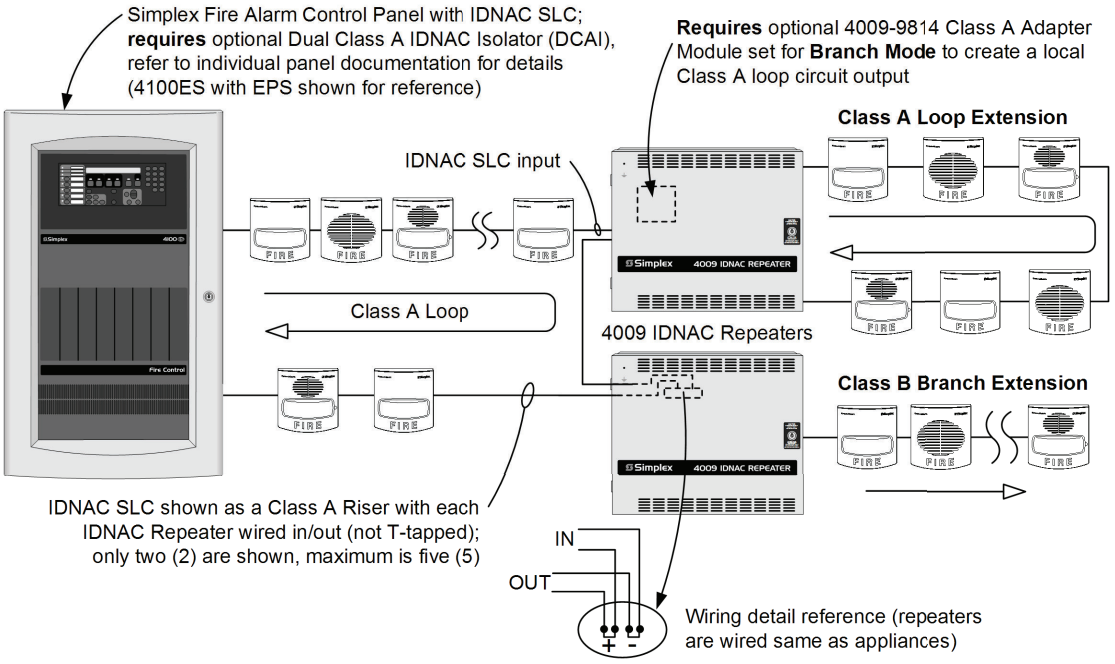

Figure 4: Wiring Reference

4009 IDNAC Repeater Mounting and Module Placement Reference

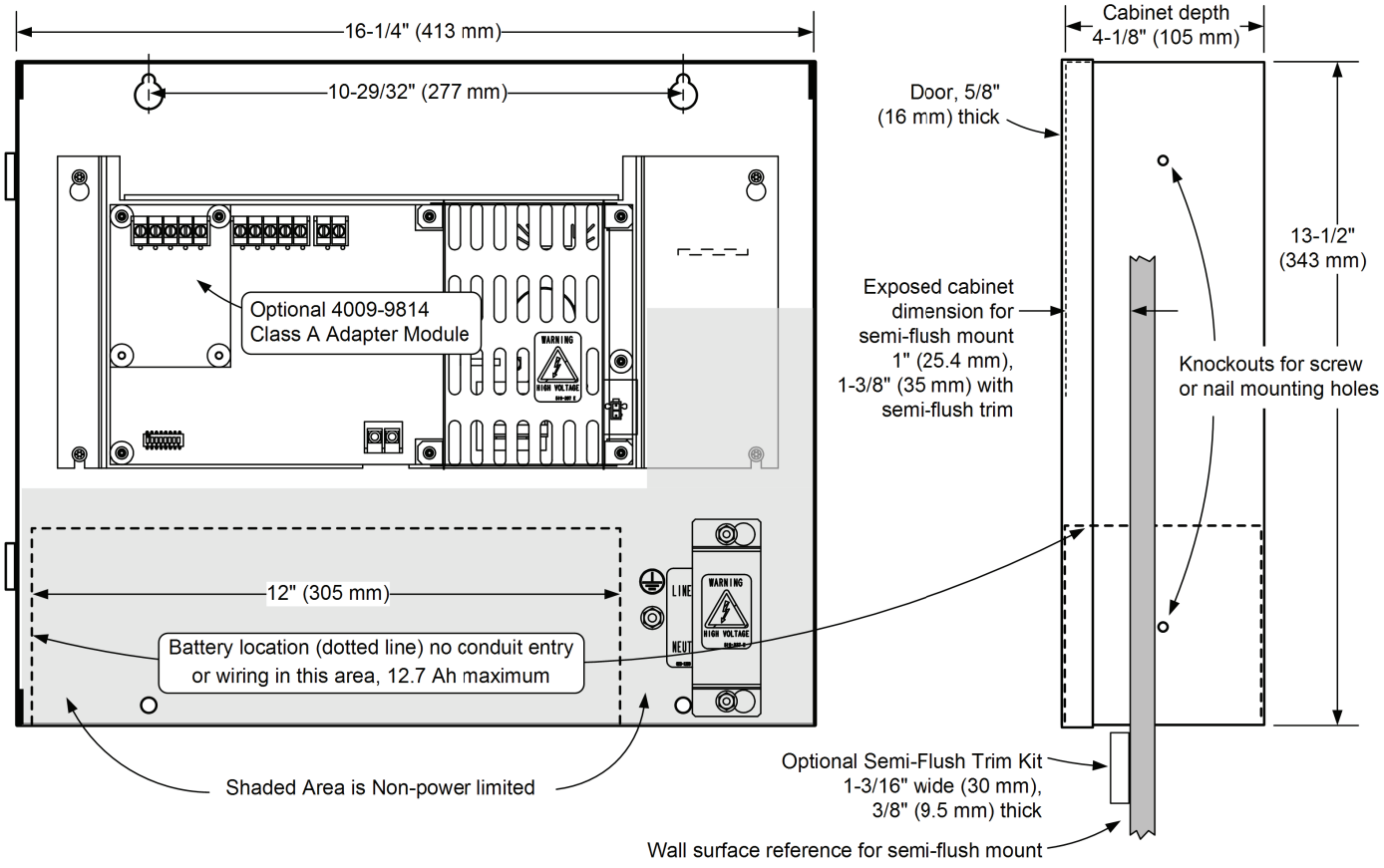

Figure 5: Placement Reference

RSN: 1523729
Permit # 2021-39[illegible]
Sheet 19 of 51

4009 IDNAC Repeater Specifications

Table 5: Input Ratings

Specification	Rating
Voltage Range	120 VAC, 50/60 Hz, or 220/230/240 VAC, 50/60 Hz, +10%, -15%, auto-select
120 VAC Current	2.5 A
220/230/240 VAC Current	1.25 A
IDNAC Input Ratings	17 VDC minimum
	1 address, 4 unit loads

Table 6: 24 VDC Requirements for Battery Calculations

Specification	Panel	IDNAC Appliances	Auxiliary Load
Standby Currents	70 mA	0.8 mA each	Output current (voltage is from battery)
Alarm Currents	96 mA	4.5 A maximum with 3 A IDNAC SLC load and 200 mA Auxiliary output load (actual alarm current depends on connected and activated appliances and devices)	1.37 x output current (voltage converter is on when in Alarm)

Table 7: Output Ratings

Specification		Rating
IDNAC SLC Output		3 A maximum @ 29 VDC for Special Application appliances
Compatible Special Application Appliances		Simplex TrueAlert ES and TrueAlert addressable notification appliances; contact your Simplex product representative for compatible appliances
IDNAC Repeater Loading and SLC Address Usage		Each repeater uses four unit loads on the IDNAC channel it receives power from and supports up to 139 additional unit loads. Most appliances are 1 unit load; Multi-Tone appliances are 2 unit loads; Repeaters and Isolators are 4 unit loads. Refer to individual appliance and device specifications for unit load requirements and rated SLC loading specifications.
		Each repeater uses one IDNAC SLC device address - the IDNAC Repeater does not increase the IDNAC channel device address capacity. Refer to the Host IDNAC SLC specifications for the device address capacity specifications on the IDNAC channel.
Auxiliary Output	Current	200 mA maximum
	Voltage	29 VDC nominal with AC present or when Repeater is on battery standby and in Alarm
		24 VDC nominal when on battery standby and not in Alarm

Table 8: IDNAC SLC Wiring Specifications (refer to installation instructions for more information)

Specification	Rating
Recommended wire type	UTP, unshielded twisted pair
Maximum wire length allowed with "T-Taps" for class B wiring	10,000 ft (3048 m)
Maximum wire length to any appliance	4000 ft (1219 m)
Wiring Connections	Terminal blocks for 18 to 12 AWG

Table 9: Repeater Status Indicators

Specification	Rating
Green AC Power LED	On with AC present, off during brownout or no AC condition
Red Communications LED (COMM)	Blinks when Repeater is communicating with the host control panel
Yellow System Status LEDs	4 LEDs provide up to 16 different trouble status indications; an on-board trouble scroll button allows review should multiple troubles occur

Table 10: 4009-9814 Class A Adapter Module Option (required for Class A loop extension or for Class A output)

Specifications	Rating
IDNAC SLC Output Voltage	3 A maximum @ 29 VDC for Special Applications appliances
	Two connections, Port A and Port B, function varies by application (loop extension or local loop), Port A and Port B are isolated from each other
Status LEDs	Two yellow trouble LED indicators, one for each port

Table 11: Environmental and Technical Publications Reference

Specification		Rating
Operating Temperature		32 °F to 120 °F (0 °C to 49 °C)
Operating Humidity Range		Up to 93% RH at 90 °F (32 °C)
Installation Instructions	4009 IDNAC Repeater	579-1019
	Class A Adapter Module	579-1080

© 2019 Johnson Controls. All rights reserved. All specifications and other information shown were current as of document revision and are subject to change without notice. Additional listings may be applicable, contact your local Simplex® product supplier for the latest status. Listings and approvals under Simplex Time Recorder Co. Simplex, and the product names listed in this material are marks and/or registered marks. Unauthorized use is strictly prohibited. NFPA 72 and National Fire Alarm Code are registered trademarks of the National Fire Protection Association (NFPA).

RSN: 1523729
Permit # 2021-1939814-LT
Sheet 20 of 51

Features

Rechargeable, sealed lead-acid batteries:

- Lead-calcium grid structure with immobilized electrolyte in absorbent separator
- Low maintenance with no need to add water
- Low self-discharge characteristics
- One-piece, high-impact polystyrene cell cover with high reliability dual-seal construction
- UL 924 recognized pressure relief valves

Available in a variety of capacities:

- Batteries for internal mounting range from 6.2 Ah to 50 Ah, depending on control panel cabinet size
- Larger batteries, up to 110 Ah, mount in external battery cabinets with models available with internal chargers

Battery cabinets with chargers:

- Battery cabinets with charger communicate with their connected fire alarm control panel and are available for 4100ES/4010ES/4100U Series and 4010 Series panels

Description

Simplex rechargeable sealed-lead acid batteries provide reliable and repeatable discharge and recharge characteristics for use in fire alarm and other systems applications. They are designed with immobilized electrolyte in an absorbent separator, allowing them to provide rated capacity on the first cycle.

Because of their sealed construction, packaging is possible within the system electronics enclosure (see Figure 3). When this is applicable, the quantity of system cabinets and the battery wiring distances are minimized. Where required, external battery cabinets can be close-nippled to the control panel to house larger batteries with battery chargers available in some battery cabinet sizes.

Battery details

Charging: These batteries are for use with compatible Simplex battery chargers.

Series connections: Connect the batteries in series to produce 24 V system voltage. Battery sets must be of identical voltage, model number, appearance, and approximately the same date of manufacture for proper operation.

Testing: Perform battery capacity testing by using a sealed lead-acid battery tester to withdraw a minimum of battery charge. Testing is available through your local Simplex product supplier.

Shipping: Sealed lead-acid batteries are shipped via ground or sea transportation only. They are not shipped via air.

Disposal: Battery chemicals and materials can be recycled. Refer to information shipped with the battery or on its case. Return to the manufacturer or to a similarly qualified battery processing facility for proper disposal.

Seismic activity applications: Battery brackets are available for systems tested for compliance with specific batteries. Refer to data sheet *S2081-0019* for details.

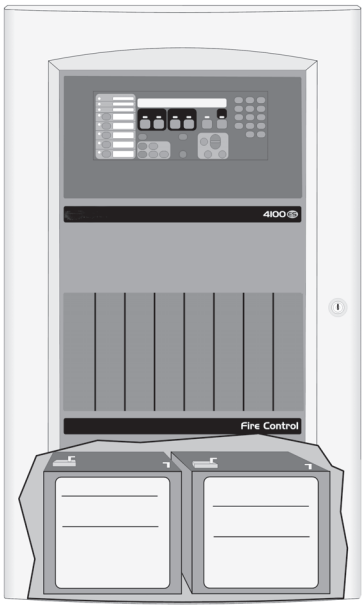

Figure 1: Compatible sealed lead-acid batteries can be installed inside fire alarm control panel cabinets

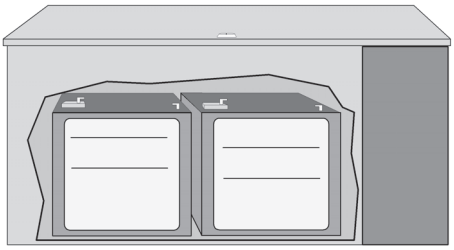

Figure 2: Remote battery cabinets are available for larger battery requirements

* Refer to page 4 for battery charger and cabinet agency listings. The batteries detailed in this document meet the requirements of UL, ULC, and Factory Mutual for use with respective equipment battery chargers as listed below. Contact your local Simplex product supplier for proper battery selection per system requirements. Listings and approvals under Simplex Time Recorder Co. are the property of Tyco Fire Protection Products.

RSN: 1523729
Permit # 2021[illegible]
Sheet 21 of 51

Battery construction reference

Actual appearance will vary with battery size.

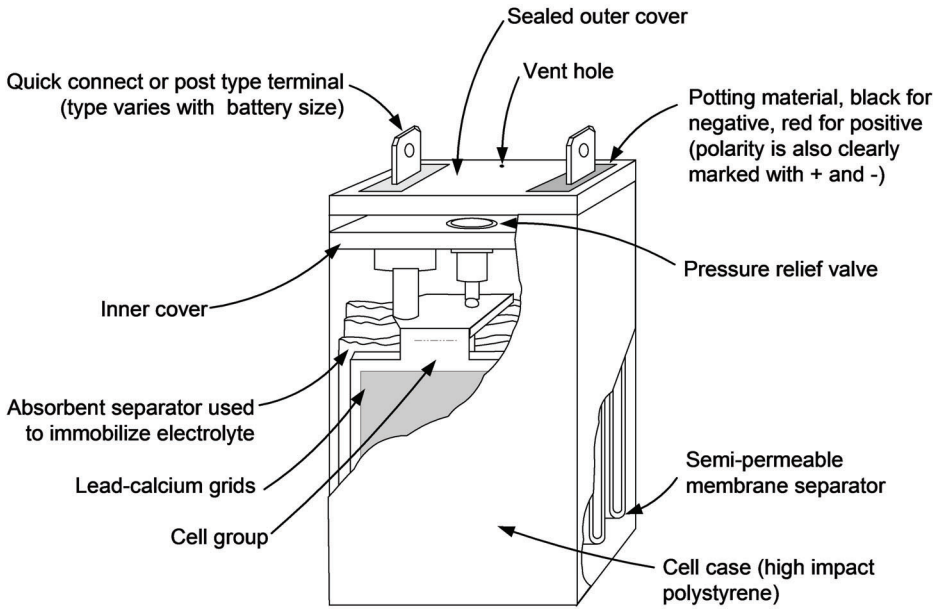

Figure 3: Battery contruction reference

Battery size specifications

Battery model	Capacity at 20 hour discharge rate	Width*	Depth*	Height with terminals	Approximate weight*
2081-9272	6.2 Ah	6 1/8 in. (156 mm)	2 5/8 in. (67 mm)	4 in. (102 mm)	5 3/4 lb (2.6 kg)
2081-9274	10 Ah	6 in. (153 mm)	4 1/16 in. (103 mm)	4 in. (102 mm)	9 1/5 lb (4.2 kg)
2081-9288	12.7 Ah	6 in. (153 mm)	4 in. (102 mm)	4 in. (102 mm)	9 lb (4.1 kg)
2081-9275	18 Ah	7 1/4 in. (184 mm)	3 3/8 in. (86 mm)	6 5/8 in. (168 mm)	14 3/10 lb (6.5 kg)
2081-9287	25 Ah	6 5/8 in. (168 mm)	5 in. (127 mm)	7 in. (178 mm)	19.4 lb (8.8 kg)
2081-9271 (rectangular case, typically for service)	33 Ah	12 1/2 in. (318 mm)	3 3/8 in. (86 mm)	7 1/16 in. (179 mm)	26 6/10 lb (12.1 kg)
2081-9276 (square case, use for new)	33 Ah	7 3/4 in. (197 mm)	5 1/4 in. (133 mm)	6 3/4 in. (171 mm)	26 1/2 lb (12 kg)
2081-9296	50 Ah	9 in. (229 mm)	5-1/2 in. (140 mm)	8 7/8 in. (225 mm)	41.8 lb (19 kg)
2081-9279	110 Ah	11 3/8 in. (284 mm)	10 1/2 in. (267 mm)	9 in. (230 mm)	82 lb (37 kg)

* Dimensions and weight are per battery and are for reference only. Exact size may vary. Refer to Battery compatibility for fire alarm control panel mounting and External battery cabinet compatibility reference for mounting compatibility. Batteries are 12 V each and connected in series for 24 V system use.

Note: When wired in series for 24 V output, these batteries are to be of identical voltage, appearance, model number, and approximately the same date of manufacture.

General battery specifications

Specifications	
Nominal Voltage Rating	12 V
Discharge Rating	20 hour rate
Typical Charge/Discharge Cycles	100 cycles to 150 cycles
Preferred Charge Temperature Range	60°F to 90°F (15.6°C to 32.2°C)

RSN: 1523729
Permit # 2021-39[illegible]
Sheet 22 of 51

Battery compatibility for fire alarm control panel mounting

Note: Refer to individual fire alarm control panel product data sheets for additional battery application information

Table 1: Battery compatibility for fire alarm control panel mounting

Simplex control panel model series										
Battery Model	**Capacity**	**4003EC**	**4004R**	**4007ES & 4005**	**4006 & 4008**	**4009 (all models)**	**4010**	**4010ES**	**4100ES/ 4100U**	**4100 & 4120 (2, 4 or 6-Unit)**
2081-9272	6.2 Ah	Yes	Yes	Yes	Yes	Yes	Yes	Yes	Yes	Yes
2081-9274	10 Ah	Yes	Yes	Yes	Yes	Yes	Yes	Yes	Yes	Yes
2081-9288	12.7 Ah	Yes	Yes	Yes	Yes	Yes	Yes	Yes	Yes	Yes
2081-9275	18 Ah	Ext	Note 3	Yes	Ext	Ext	Note 2	Yes	Yes	Yes
2081-9287	25 Ah	Ext	Note 3	Ext	Ext	N/A	Yes	Yes	Yes	Yes
2081-9271 rectangular	33 Ah	Ext	Note 3	Ext	N/A	N/A	Note 3	Yes	Yes	Ext
2081-9276 "square"	33 Ah	Ext	Note 3	N/A	N/A	N/A	Note 3	Yes	Yes	Yes
2081-9296	50 Ah	N/A	Note 3	N/A	N/A	N/A	Note 3	Note 4	2 or 3 bay	Ext
2081-9279	110 Ah	Requires external battery cabinet, compatible with 4100ES, 4010ES, 4100, and 4120 Series only								

Yes = Can be placed in the respective equipment cabinet

Ext = External battery cabinet is required, refer to selection chart on page 4

N/A = Not applicable/not compatible

Note:

1. These batteries meet the requirements of UL, ULC, and Factory Mutual for use with respective equipment battery chargers listed above. Contact your local Simplex product supplier for proper battery selection per system requirements.
2. 4010 Cabinets will accommodate 2081-9275, 18 Ah batteries, but will not allow bottom entry conduit.
3. Use 4081 series companion cabinet and charger, refer to External battery cabinet specification reference.
4. For two bay cabinets only, 50 Ah batteries will fit in the cabinet.

External battery cabinet compatibility reference

Table 2: External battery cabinet compatibility reference

Battery cabinets without chargers (connects to charger in panel)							
Cabinet	**Panel compatibility**	**Battery**					
		2081-9275 18 Ah*	2081-9287 18 Ah*	2081-9271 Rectangular 33 Ah	2081-9276 Square 33 Ah	2081-9296 50 Ah	2081-9279 110 Ah
2081-9280	4100ES, 4010ES, 4100U, and 4100+	N/A	N/A	N/A	N/A	N/A	Yes
2081-9281 2081-9282	multiple	Yes	Yes	Yes	Yes	Yes	N/A
4009-9801	multiple	Yes	Yes**	N/A	Yes	N/A	N/A

Table 3: External battery cabinet compatibility reference

Battery cabinets with chargers							
Cabinet	**Panel compatibility**	**Battery**					
		2081-9275 18 Ah*	2081-9287 18 Ah*	2081-9271 Rectangular 33 Ah	2081-9276 Square 33 Ah	2081-9296 Square 50 Ah	2081-9279 110 Ah
4081-9301 4081-9302	4004R and 4010	Yes	Yes	Yes	Yes	Yes	N/A
4081-9306 4081-9308	4100ES, 4010ES and 4100U	N/A	N/A	N/A	N/A	Yes	Yes

* Batteries smaller than those listed are normally mounted in the product cabinet

** 25 AH capacity is effective as of 7/2005

Yes = Can be placed in the respective equipment cabinet

N/A = Not applicable/not compatible

RSN: 1523729
Permit # 2021-0398-SOT
Sheet 23 of 51

External battery cabinet specification reference

Table 4: Battery cabinets without chargers; shallow design with front door

Model	Color	Listings	Description		Dimensions
2081-9281	Beige	UL and CSFM	2-Unit, 4100 style cabinet without charger; with locking solid door and battery shelf, primarily for use with 50 Ah batteries		25 3/4 in. W x 20 3/4 in. H x 6 3/4 in. D (654 mm x 527 mm x 171 mm)
2081-9282	Red	UL			
4003-9860*	Beige	FM	For use with 4003EC systems, for batteries up to 33 Ah (refer to 4003EC data sheet S4003-0002)		9 1/2 in. H x 24 in. W x 9 in. D (241 mm x 610 mm x 229 mm)
4009-9801*	Beige	UL, ULC, and FM	For batteries up to 33 Ah	External battery cabinet without charger, with locking solid door and battery harness; for close-nippled mounting to fire alarm control panel cabinet	16 1/4 in. W x 13 1/2 in. H x 5 3/4 in. D (413 mm x 343 mm x 146 mm)*
* Depth increased for 2081-9276 **square** 33 Ah batteries effective 7/2005.					

Table 5: Battery cabinet without charger; deep design with hinged lid

Model	Color	Listings	Description	Dimensions
2081-9270	Red	UL	Battery cabinet without charger; cabinet has vented front, and hinged lid with support rod and lock on top	26 1/2 in. W x 12 in. H x 12 in. D (673 mm x 305 mm x 305 mm)

Table 6: Chargers for use with 4010 fire alarm control panels and 4004R suppression release systems (refer to data sheet S4081-0001)

Model	Color	Listings	Input voltage	Description	Dimensions
4081-9301	Beige	UL and FM	120 VAC	Battery cabinet with charger for the 4010 and 4004R fire alarm control panel; for batteries up to 50 Ah; with front door	22 1/2 in. W x 16 3/4 in. H x 8 3/8 in. D (572 mm x 425 mm x 213 mm)
4081-9302	Red				

Table 7: Battery cabinet without charger for 110 Ah batteries; for use with compatible panel mounted chargers (refer to data sheet S2081-0012)

Model and listing	Color	Listings	Cabinet description	Compatible chargers	Charger description	Dimensions
2081-9280	Red	UL, ULC, CSFM	Battery cabinet without charger for 2081-9279, 110 Ah batteries; includes 80 A battery fuse, terminals and battery connection cables; see data sheet for details	4100-9xxx Series	4100ES/4100U Power Supplies for Master Controller/CPU Bays	26 1/2 in. W x 12 in. H x 12 in. D (673 mm x 305 mm x 305 mm)
				4100-5401	4100ES Additional ES Power Supply (ES-PS)	
				4100-5111 4100-5113	4100ES/4100U Additional SPS	
				4100-5311 4100-5313	4100ES Additional EPS+	
				4100-5325 4100-5327	4100ES Additional EPS	
				4100-5125 4100-5127	4100ES/4100U Remote Power Supply (RPS)	
				4100-5120 4100-5122	4100ES/4100U TrueAlert Addressable Power Supply (TPS)	
				4100-0104 4100-0114 4100-0124	4100 legacy power supplies	

Table 8: Battery cabinet without charger for 110 Ah batteries; for use with compatible panel mounted chargers (refer to data sheet S2081-0012)

Model	Color	Listings	Input voltage	Description	Dimensions
4081-9306	Red	UL, ULC, FM, MEA (NYC)	120 VAC	Battery cabinet with charger for batteries up to 110 Ah	27 7/8 in. W x 13 1/2 in. H x 14 5/8 in. D (708 mm x 343 mm x 371 mm)
4081-9308	Red	UL, ULC, FM	220/230/240 VAC, multi-tapped		
4100-9837	Green LED Power-on Indicator Kit, required for ULC listing, mounts above access panel using knockout provided				

© 2021 Johnson Controls. All rights reserved. All specifications and other information shown were current as of document revision and are subject to change without notice. Additional listings may be applicable, contact your local Simplex® product supplier for the latest status. Listings and approvals under Simplex Time Recorder Co. Simplex, and the product names listed in this material are marks and/or registered marks. Unauthorized use is strictly prohibited. NFPA 72 and National Fire Alarm Code are registered trademarks of the National Fire Protection Association (NFPA).

Simplex

*UL, ULC, CSFM Listed;FM Approved**

TrueAlarm Analog Sensors – Photoelectric and Heat; Standard Bases and Accessories

Features

TrueAlarm analog sensing provides:

- Digital transmission of analog sensor values via IDNet or MAPNET II two-wire communications

For use with the following Simplex products:

- 4007ES, 4010, 4010ES, 4100ES, and 4100U Series control panels; and 4008 Series control panels with reduced feature set (refer to data sheet *S4008-0001* for details)
- 4020, 4100, and 4120 Series control panels, Universal Transponders, and 2120 TrueAlarm CDTs equipped for MAPNET II operation

Fire alarm control panel provides:

- Peak value logging allowing accurate analysis of each sensor for individual sensitivity selection
- Sensitivity monitoring satisfying NFPA 72 sensitivity testing requirements; automatic individual sensor calibration check verifies sensor integrity
- Automatic environmental compensation, multi-stage alarm operation, and display of sensitivity directly in percent per foot
- Ability to display and print detailed sensor information in plain English language

Photoelectric smoke sensors provide:

- Sensitivity levels from 0.2% to 3.1%. See TrueAlarm Sensors for more information.

Heat sensors provide:

- Three fixed temperature sensing thresholds: 135° F, 155° F and 190° F
- Rate-of-rise temperature sensing
- Utility temperature sensing
- Listed to UL 521 and ULC-S530

General features:

- Operation is for ceiling or wall mounting
- Listed to UL 268 and ULC-S529
- NEMA 1 rated. See TrueAlarm Analog Sensing Product Selection Chart for more information.
- Louvered smoke sensor design enhances smoke capture by directing flow to chamber; entrance areas are minimally visible when ceiling mounted
- Designed for EMI compatibility
- Magnetic test feature is provided
- Different bases are available to support a supervised or unsupervised output relay, and/or a remote LED alarm indicator

Additional base reference:

- For isolator bases, refer to data sheet S4098-0025
- For sounder bases, refer to data sheet S4098-0028
- For photo/heat sensors, refer to data sheet S4098-0024 (single address) and S4098-0033 (dual address)

Description

Digital Communication of Analog Sensing

TrueAlarm analog sensors provide an analog measurement digitally communicated to the host control panel using Simplex addressable communications. At the control panel, the data is analyzed and an average value is determined and stored. An alarm or other abnormal condition is determined by comparing the sensor's present value against its average value and time.

Intelligent Data Evaluation

Monitoring each sensor's average value provides a continuously shifting reference point. This software filtering process compensates for environmental factors (dust, dirt, etc.) and component aging, providing an accurate reference for evaluating new activity. With this filtering, there is a significant reduction in the probability of false or nuisance alarms caused by shifts in sensitivity, either up or down.

Control Panel Selection

Peak activity per sensor is stored to assist in evaluating specific locations. The alarm set point for each TrueAlarm sensor is determined at the host control panel, selectable as more or less sensitive as the individual application requires.

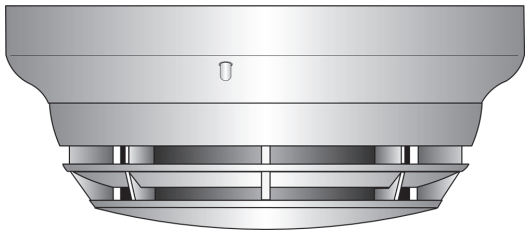

Figure 1: 4098-9714 TrueAlarm Photoelectric Sensor Mounted in Base

Timed/Multi-Stage Selection

Sensor alarm set points can be programmed for timed automatic sensitivity selection (such as more sensitive at night, less sensitive during day). Control panel programming can also provide multi-stage operation per sensor.

Sensor Alarm and Trouble LED Indication

Each sensor base's LED pulses to indicate communications with the panel. If the control panel determines a sensor is in alarm, or is dirty or has some other type of trouble, the details are annunciated at the control panel and that sensor base's LED will be turned on steadily. During a system alarm, the control panel will control the LEDs such that an LED indicating a trouble will return to pulsing to help identify the alarmed sensors.

TrueAlarm Sensor Bases and Accessories

Sensor Base Features

Base mounted address selection:

- Address remains with its programmed location
- Accessible from front (DIP switch under sensor)

General features:

- Automatic identification provides default sensitivity when substituting sensor types
- Integral red LED for power-on (pulsing), or alarm or trouble (steady on)
- Locking anti-tamper design mounts on standard outlet box
- Magnetically operated functional test

* These products have been approved by the California State Fire Marshal (CSFM) pursuant to Section 13144.1 of the California Health and Safety Code. See CSFM Listings 7272-0026:218, 7271-0026:231, 7270-0026:216, and 7300-0026:217 for allowable values and/or conditions concerning material presented in this document. Additional listings may be applicable, contact your local Simplex product supplier for the latest status. Listings and approvals under Simplex Time Recorder Co. are the property of Tyco Fire Protection Products.

RSN: 1523729
Permit # 2021[illegible]
Sheet 25 of 51

Sensor Bases

4098-9792, Standard Sensor Base

4098-9789, Sensor Base with wired connections for:

- 2098-9808 Remote LED alarm indicator or 4098-9822 relay (relay is unsupervised and requires separate 24 VDC)

Supervised Relay Bases (not compatible with 2120 CDT):

- **4098-9791, 4-Wire Sensor Base,** use with remote or locally mounted 2098-9737 relay, requires separate 24 VDC
- **4098-9780, 2-Wire Sensor Base,** use with remote or locally mounted 4098-9860 relay, no separate power required
- Supervised relay operation is programmable and can be manually operated from control panel
- Includes wired connections for remote LED alarm indicator **or** 4098-9822 relay (relay is unsupervised and requires separate 24 VDC)

Sensor Base Options

2098-9737, Remote or local mount supervised relay:

- DPDT contacts for resistive/suppressed loads, power limited rating of 3 A @ 28 VDC; non-power limited rating of 3 A @ 120 VAC (requires external 24 VDC coil power)

4098-9860, Remote or local mount supervised relay:

- SPDT dry contacts, power limited rating of 2 A @ 30 VDC, resistive; non-power limited rating of 0.5 A @ 125 VAC, resistive

4098-9822, LED Annunciation Relay:

- Activates when base LED is on steady, indicating local alarm or trouble
- DPDT contacts for resistive/suppressed loads, power limited rating of 2 A @ 28 VDC; non-power limited rating of 1/2 A @ 120 VAC, (requires external 24 VDC coil power)

4098-9832, Adapter plate:

- Required for surface or semi-flush mounting to 4" square electrical box and for surface mounting to 4" octagonal box
- Can be used for cosmetic retrofitting to existing 6-3/8" diameter base product

2098-9808, Remote red led Alarm Indicator:

- Mounts on single gang box (shown in illustration)

Figure 2: Remote red LED Alarm Indicator

Description

TrueAlarm sensor bases contain integral addressable electronics that constantly monitor the status of the detachable photoelectric or heat sensors. Each sensor's output is digitized and transmitted to the system fire alarm control panel every four seconds.

Since TrueAlarm sensors use the same base, different sensor types can be easily interchanged to meet specific location requirements. This feature also allows intentional sensor substitution during building construction. When conditions are temporarily dusty, instead of covering the smoke sensors (causing them to be disabled), heat sensors may be installed without reprogramming the control panel. Although the control panel will indicate an incorrect sensor type, the heat sensor will operate at a default sensitivity providing heat detection for building protection at that location.

Mounting Reference

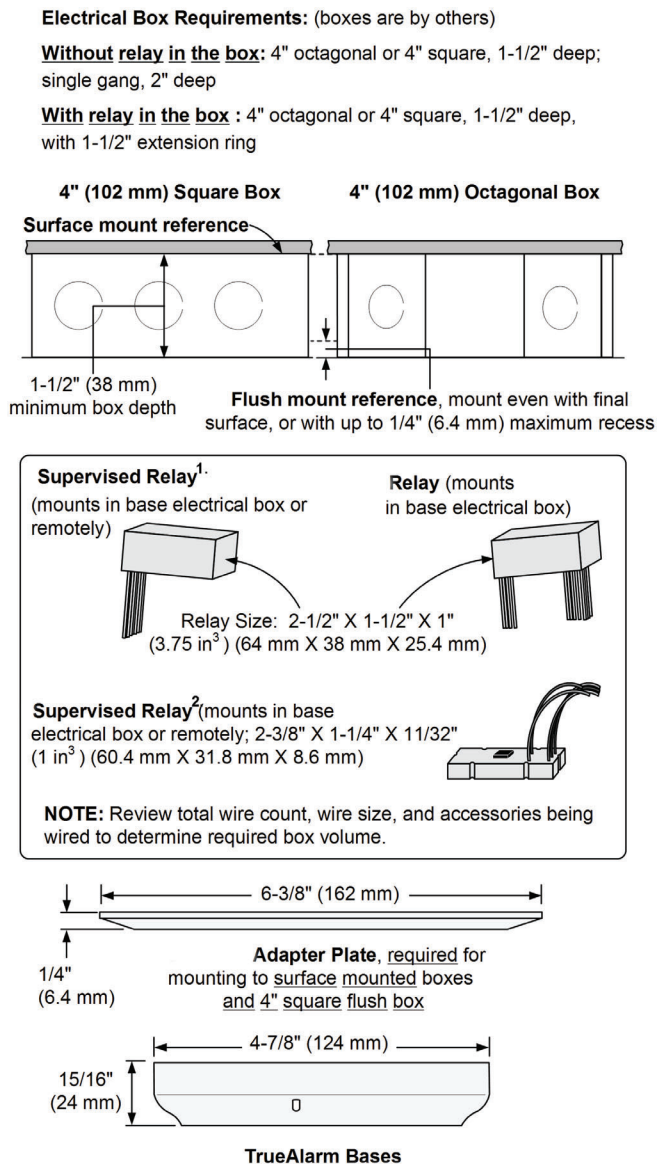

Figure 3: Mounting Reference

Table 1: Product mounting - SKU reference

Product	SKU
Relay	4098-9822
Supervised Relay	1. 2098-9739 2. 4098-9860
Adapter plate	4098-9832
TrueAlarm Bases	4098-9780, 4098-9789, 4098-9791, 4098-9792

RSN: 1523729
Permit # 2021[illegible]
Sheet 26 of 51

TrueAlarm Sensors

Features

- Sealed against rear air flow entry
- Interchangeable mounting
- EMI/RFI shielded electronics
- Heat sensors:
  - Selectable rate compensated, fixed temperature sensing with or without rate-of-rise operation
  - Rated spacing distance between sensors:

Fixed Temp. Setting	UL & ULC Spacing	FM Spacing, Either Fixed Temperature Setting
135° F (57.2° C) 190° F (88° C)*	60 ft x 60 ft (18.3 m)	20 ft x 20 ft (6.1 m) for fixed temperature only; **RTI = Quick**
155° F (68° C)	40 ft x 40 ft (12.2 m)	50 ft x 50 ft (15.2 m) for fixed temperature with either rate-of-rise selection; **RTI = Ultra Fast**

Note: *190° F (88° C) ratings apply only to the 4098-9734 sensor.

Smoke Sensors:

- Photoelectric technology sensing
- 360° smoke entry for optimum response
- Built-in insect screens

4098-9714 Photoelectric Sensor

TrueAlarm photoelectric sensors use a stable, pulsed LED light source and a silicon photodiode receiver to deliver consistent and accurate low power smoke sensing. Three user selectable sensitivities for special applications are available for each individual sensor, 0.2%, 0.5%, and 1% per foot. Standard sensitivity is 1.25% to 3.1% per foot. The fire alarm control panel runs an algorithm that can vary the sensitivity for normal applications between 1.25% and 3.1% per foot.

Note: Fixed sensitivity settings higher than 1.0% per foot are not UL268 7th Edition compliant.

The sensor head design provides 360° smoke entry for optimum response to smoke from any direction. Due to its photoelectric operation, air velocity is not normally a factor, except for impact on area smoke flow.

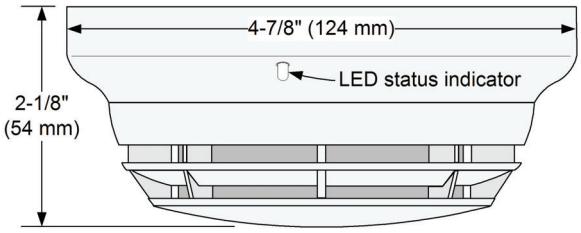

Figure 4: 4098-9714 Photoelectric Sensor with Base

4098-9733 and 4098-9734 Heat Sensors

TrueAlarm heat sensors are self-restoring and provide rate compensated, fixed temperature sensing, selectable with or without rate-of-rise temperature sensing. Due to its small thermal mass, the sensor accurately and quickly measures the local temperature for analysis at the fire alarm control panel.

Rate-of-rise temperature detection is selectable at the control panel for either 15° F (8.3° C) or 20° F (11.1° C) per minute. Fixed temperature sensing is independent of rate-of-rise sensing and programmable to operate at 135° F (57.2° C) or 155° F (68° C). The 4098-9734 sensor provides an additional 190° F (88° C) set point.

In a slow developing fire, the temperature may not increase rapidly enough to operate the rate-of-rise feature. However, an alarm will be initiated when the temperature reaches its rated fixed temperature setting.

TrueAlarm heat sensors can be programmed as a utility device to monitor for temperature extremes in the range from 32° F to 155° F (0° C to 68° C). This feature can provide freeze warnings or alert to HVAC system problems. *Refer to specific panels for availability.*

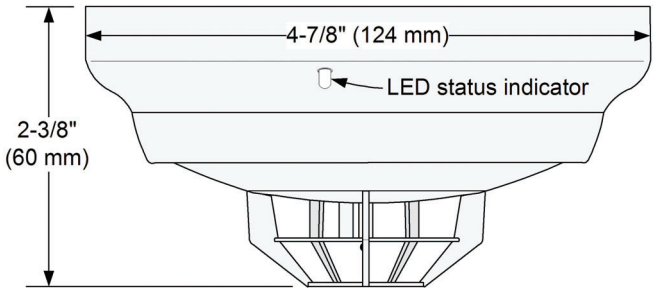

Figure 5: 4098-9733 Heat Sensor with Base

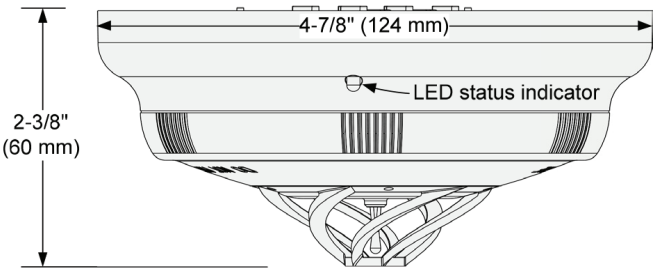

Figure 6: 4098-9734 High Temperature Heat Sensor with Base

WARNING: In most fires, hazardous levels of smoke and toxic gas can build up before a heat detection device would initiate an alarm. In cases where Life Safety is a factor, the use of smoke detection is highly recommended.

Application Reference

Sensor locations should be determined only after careful consideration of the physical layout and contents of the area to be protected. Refer to NFPA 72, *the National Fire Alarm and Signaling Code*. On smooth ceilings, smoke sensor spacing of 30 ft (9.1 m) may be used as a guide.*

* For detailed application information including sensitivity selection, refer to Installation Instructions 574-709.

RSN: 1523729
Permit # 2021[illegible]
Sheet 27 of 51
TrueAlarm Analog Sensors – Photoelectric and Heat; Standard Bases and Accessories

TrueAlarm Analog Sensing Product Selection Chart

Table 2: TrueAlarm Sensor Bases (for use with Sensors 4098-9714 and 4098-9733)

SKU	Color	Description	Compatibility	Mounting Requirements
4098-9792	White	Standard Sensor Base	No options	4 in. octagonal or 4 in. square box, 1 1/2 in. min. depth; or single gang box, 2 in. min. depth
4098-9776	Black			
4098-9789	White	Sensor Base with connections for Remote LED Alarm Indicator **or** Unsupervised Relay	2098-9808 Remote Alarm Indicator **or** 4098-9822 Unsupervised Relay	4 in. octagonal or 4 in. square box **Note:** Box depth requirements depend on total wire count and wire size, refer to accessories list below for reference. ** 4098-9791 and 4098-9780 are NOT compatible with the 2120 CDT
4098-9789 4098-9789IND 4098-9789IND	White			
4098-9775	Black			
4098-9791 **	White	4-Wire Sensor Supervised Relay Base with connections for LED Indicator **or** Unsupervised Relay	2098-9737 Supervised Remote Relay 2098-9808 Remote Alarm Indicator **or** 4098-9822 Unsupervised Relay	
4098-9780**	White	2-Wire Sensor Supervised Relay Base with connections for LED Indicator **or** Unsupervised Relay	4098-9860 Supervised Remote Relay 2098-9808 Remote Alarm Indicator or 4098-9822 Unsupervised Relay	

Note: * SKU numbers ending in IND are assembled in India.

Refer to Application Manual 574-709 and Installation Instructions 574-707 for additional information.

Table 3: TrueAlarm Sensors

SKU	Color	Description	Compatibility	Mounting Requirements
4098-9714 [1]	White	Photoelectric Smoke Sensor	Bases 4098-9775, 4098-9776, 4098-9792, 4098-9789, 4098-9791, and 4098-9780	Refer to base requirements
4098-9714 IND [1]				
4098-9774 [1]	Black			
4098-9733 [1]	White	Heat Sensor		
4098-9778 [1]	Black			
4098-9734 [1]	White	High Temperature Heat Sensor		

[1]NEMA 1 rated.

Table 4: TrueAlarm Sensor/Base Accessories

SKU	Description	Compatibility	Mounting Requirements
2098-9737	Supervised Relay, mounts remote or in base electrical box	For use with 4098-9791 base	**Remote Mounting** requires 4 in. octagonal or 4 in. square box, 1 1/2 in. minimum depth **Base Mounting** requires 4 in. octagonal box, 2 1/8 in. deep with 1 1/2 in. extension ring
4098-9860	Supervised Relay, mounts remote or in base electrical box	For use with 4098-9780 base	
2098-9808 [1]	Remote Red LED Alarm Indicator on single gang stainless steel plate	Bases 4098-9789, 4098-9791, and 4098-9780	Single gang box, 1 1/2 in. minimum depth
4098-9822	Unsupervised Relay, tracks base led status; Note: Mounts only in base electrical box	Bases 4098-9789, 4098-9791, and 4098-9780	4 in. octagonal box, 2 1/8 in. deep with 1 1/2 in. extension ring
4098-9832	Adapter Plate	Bases 4098-9792, 4098-9789, 4098-9791, and 4098-9780	**Required** for surface or semi-flush mounted 4 in. square box and for surface mounted 4 in. octagonal box

[1] NEMA 1 rated.

Specifications

Table 5: General operating specifications

Specification		Rating
Communications and sensor supervisory power		IDNet or MAPNET II communications, auto-selected, 1 address per base
Communications connections		Screw terminals for in/out wiring, 18 to 14 AWG (0.82 mm^2 to 2.08 mm^2)
Remote LED alarm indicator current		1 mA typical, no impact to alarm current
Remote LED alarm indicator and relay connections		Color coded wire leads, 18 AWG (0.82 mm^2)
UL listed operating temperature range		32°F to 100°F (0°C to 38°C)
Operating temperature range	with 4098-9733 Heat Sensor	32°F to 122°F (0°C to 50°C)
	with 4098-9714 Smoke Sensor	15°F to 122°F (-9°C to 50°C)
	with 4098-9734 Heat Sensor	32°F to 150°F (0°C to 66°C)

RSN: 1523729
Permit # 2021-39[illegible]
Sheet 28 of 51

Table 5: General operating specifications

Specification	Rating
Storage temperature range	0°F to 140°F (-18°C to 60°C)
Humidity range	10% to 95% RH
4098-9714 smoke sensor air velocity rating	0-4000 ft/min (0-1220 m/min)
Housing color	Frost white or black

Table 6: 4098-9791 Base with Supervised Remote Relay 2098-9737

Specification	Rating
Externally supplied relay coil voltage	18 VDC to 32 VDC (nominal 24 VDC)
Supervisory current	270 µA, from 24 VDC supply
Alarm current with 2098-9737 relay	28 mA, from 24 VDC supply
Note: See Sensor Base Options for contact ratings.	

Table 7: 4098-9780 Base with Supervised Remote Relay 4098-9860

Specification	Rating
Power	Supplied from communications

Table 8: 4098-9822 Unsupervised Relay, Requirements for Bases 4098-9789, 4098-9791, and 4098-9780

Specification	Rating
Externally supplied relay coil voltage	18 VDC to 32 VDC (nominal 24 VDC)
Supervisory current	Supplied from communications
Alarm current	13 mA from separate 24 VDC supply
Note: See Sensor Base Options for contact ratings.	

RSN: 1523729
Permit # 2021-3998
Sheet 29 of 51

© 2020 Johnson Controls. All rights reserved. All specifications and other information shown were current as of document revision and are subject to change without notice. Additional listings may be applicable, contact your local Simplex® product supplier for the latest status. Listings and approvals under Simplex Time Recorder Co. Simplex, and the product names listed in this material are marks and/or registered marks. Unauthorized use is strictly prohibited. NFPA 72 and National Fire Alarm Code are registered trademarks of the National Fire Protection Association (NFPA).

Simplex®

TrueAlarm Smoke Detectors

*UL, ULC, CSFM Listed; FM Approved; MEA (NYC) Acceptance**

TrueAlarm Photoelectric Smoke Detectors for Two-Wire and Four-Wire Bases

Features

Photoelectric smoke detector with on-board TrueAlarm sensitivity drift compensation:

Functional chamber enclosure:

- Louvered design enhances smoke capture by directing flow to chamber
- Entrance areas are minimally visible when ceiling mounted
- Operation is for ceiling or wall mounting

Multi-function indicator LED indicates normal and alarm conditions

Magnetically operated functional test:

- Initiates alarm and verifies performance
- Identifies general sensitivity status using detector LED

Models available in two sensitivity settings:

- 4098-9601, Standard Sensitivity, nominal 2.8%/ft obscuration*
- 4098-9605, Special Application Sensitivity, nominal 3.5%/ft obscuration

Available options:

- Bases for 2-wire or 4-wire operation
- Auxiliary alarm relay output
- Remote alarm indicating LED

Designed for EMI compatibility

UL listed to Standard 268

Description

Simplex® TrueAlarm photoelectric detectors provide many of the proven TrueAlarm analog sensing features for applications where detectors are connected to conventional 2-wire or 4-wire initiating device circuits (IDCs). Each TrueAlarm detector has an on-board microprocessor that evaluates its photoelectric light scattering chamber activity and makes an intelligent decision based on light obscuration history as to whether an alarm condition is present.

TrueAlarm detectors are packaged in a patented housing that minimizes the visibility of the air intake louvers from the normal viewing locations while maintaining a high performance smoke capture ability. Bases are available for remote alarm LED indicator connections and auxiliary relay outputs.

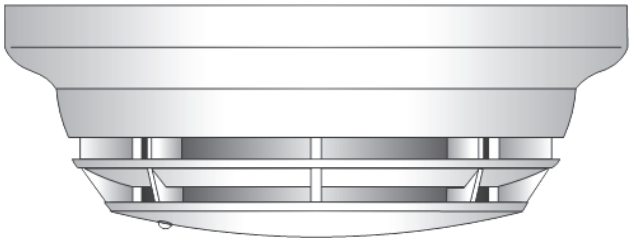

4098-9601 TrueAlarm Photoelectric Detector Mounted in Base

Specifications

Voltage	15 to 32 VDC from Fire Alarm Control Panel IDC
Standby Current	100 µA @ 24 VDC
Alarm Current, 2-Wire Operation	Up to 86 mA maximum, exact current is determined by alarm current limiting of connected IDC
Alarm Current, 4-Wire Operation	24 mA typical @ 24 VDC
Auxiliary Relay Ratings	Refer to page 2 under Product Selection
Air Velocity Range	0-2000 ft/min (0-610 m/min)
UL Listed Temp. Range	32° to 100° F (0° to 38° C)
Operating Temp. Range	15° to 122° F (-9° to + 50° C)
Storage Temp. Range	0° to 140° F (-18° C to 60° C)
Humidity Range	10% to 95% RH from 32° to 122° F (0° to 50° C) non-condensing
Color	Frost White
Dimensions	4-7/8" Dia. x 1-7/8" H, mounted in base (124 mm x 48 mm); refer to page 3 for detail

* ULC listed model is 4098-9601. This product has been approved by the California State Fire Marshal (CSFM) pursuant to Section 13144.1 of the California Health and Safety Code. See CSFM Listing 7272-0026:219 for allowable values and/or conditions concerning material presented in this document. Accepted for use – City of New York Department of Buildings – MEA35-93E. Additional listings may be applicable; contact your local Simplex product supplier for the latest status. Listings and approvals under Simplex Time Recorder Co. are the property of Tyco Fire Protection Products.

TrueAlarm Smoke Detector Features

Intelligent Data Evaluation. Conventional smoke detectors will typically drift toward being too sensitive due to the accumulation of dust and dirt. With TrueAlarm analog detection, data from the photoelectric chamber is monitored and analyzed at the detector to provide a continuously shifting reference point.

Drift Compensation. The data evaluation and its shifting reference point provide a software filtering process that compensates for environmental factors (dust, dirt, etc.) and component aging, establishing an accurate reference for evaluating new activity. With this filtering, the resulting drift compensation provides a significant reduction in the probability of false or nuisance alarms caused by shifts in sensitivity – either up or down.

Magnetic Test Information. Status information is available by performing the magnetic test and observing the detector LED pulses. The LED will normally go directly into alarm with the magnetic test. If there is an off-normal condition, the LED pulses first to indicate the condition and then goes into alarm. (See page 3.)

Application Reference

Detector Locations. Locations should be determined only after careful consideration of the physical layout and contents of the area to be protected. Refer to NFPA 72, the *National Fire Alarm Code*. On smooth ceilings, smoke detector spacing of 30 ft (9.1 m) may be used as a guide. For detailed installation information, refer to *4098 Detectors, Sensors, and Bases Application Manual* (574-709).

Sensitivity Selection. The 4098-9601 standard sensitivity detector is recommended for most applications. When a special application for a reduced sensitivity detector is required, the 4098-9605 should be considered. Consult your local Simplex product supplier for assistance in determining the proper selection.

Product Selection

Smoke Detectors

Model	Nominal Sensitivity	Description	Compatibility
4098-9601	2.8%/ft (standard)	TrueAlarm Photoelectric Detector	Compatible with bases: 4098-9788, 4098-9682, and 4098-9683
4098-9605	3.5%/ft (special application sensitivity, not ULC listed)		

Compatible Bases

Model	Description	Details*
4098-9788	**2-Wire Base** with connections for Remote Alarm LED Indicator	IDC and LED connections are screw terminals for in/out wiring, 18 to 14 AWG
4098-9682	**4-Wire Base** with Auxiliary Alarm Relay Contacts and connections for Remote LED Alarm Indicator **NOTE:** Requires external 24 VDC for operation	**Relay Ratings, Single Form "C", For Suppressed Loads:** Power limited, 3 A @ 28 VDC; Non-power limited, 3 A @ 120 VAC
		Wiring Connections (In/Out where required): Relay contacts and IDC wiring, color coded 18 AWG leads; LED wiring, screw terminals for 18 to 14 AWG
4098-9683	**2-Wire Base with Auxiliary Alarm Relay** & connections for Remote LED Indicator **NOTE:** Must be connected as the only device on the IDC to ensure relay operation.	**Relay Ratings, Dual Form "C", For Suppressed Loads:** Power limited, 1 A @ 28 VDC; Non-power limited, 1/2 A @ 120 VAC
		Wiring Connections (In/Out where required): Relay contacts and IDC (-), color coded 18 AWG leads; IDC (+) and LED wiring, screw terminals for 18 to 14 AWG

Detector Accessories

Model	Description		Details*	
4098-9832	Adapter Plate		**Required** for mounting to surface mounted 4" (102 mm) square or 4" octagonal boxes, and to 4" square flush mounted boxes	
			May be used when retrofitting existing bases	
			Compatible with detector bases 4098-9788, -9682, & -9683	
4098-9830	Remote LED Indicator		Mounted on single gang stainless steel plate	
2098-9739	Encapsulated	24 VDC End-of-Line Relay	Dimensions: 2-1/2" x 1-1/2" x 1" (64 mm x 38 mm x 25.4 mm)	**Required** for 4-wire circuits using 4098-9682 base, one per circuit; select mounting type as required; wiring is color coded 18 AWG wire leads
2098-9735	Plate Mounted		Mounted on single gang stainless steel plate	

* Refer to pages 3 and 4 for dimensions and additional mounting details; 18 AWG = 0.82 mm^2; 14 AWG = 2.08 mm^2

Detector Status LED Indications

LED Indication	Status
Pulses approximately every 4 seconds	Normal
Steady On	Alarm

LED Response to Magnetic Test *

LED Indication	Followed By	Status	Action
LED turns ON	Alarm is initiated	**Normal**, sensitivity is within compensation range	None
LED pulses quickly, 6 times in 3 seconds, then turns ON	Alarm is initiated	**More sensitive**, out of normal compensation range	Cleaning or other **service is required**
LED pulses slowly, 4 times in 8 seconds, then turns ON	Alarm is initiated	**Less sensitive**, out of normal compensation range	
	Does not initiate Alarm	**Detector is malfunctioning**	**Service is required**

* Testing requires placing a magnet at the designated location on the detector cover for 4 seconds. Refer to Application Manual 574-709 for further test and maintenance information.

Dimensions and Reference Information

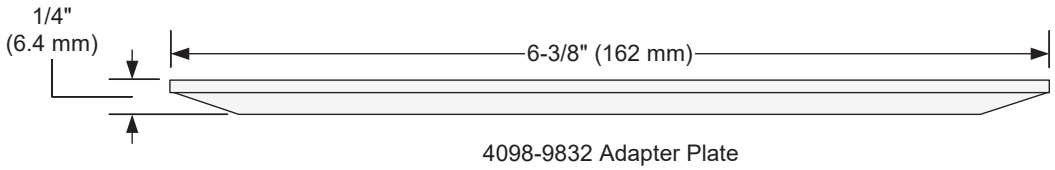

4098-9832 Adapter Plate

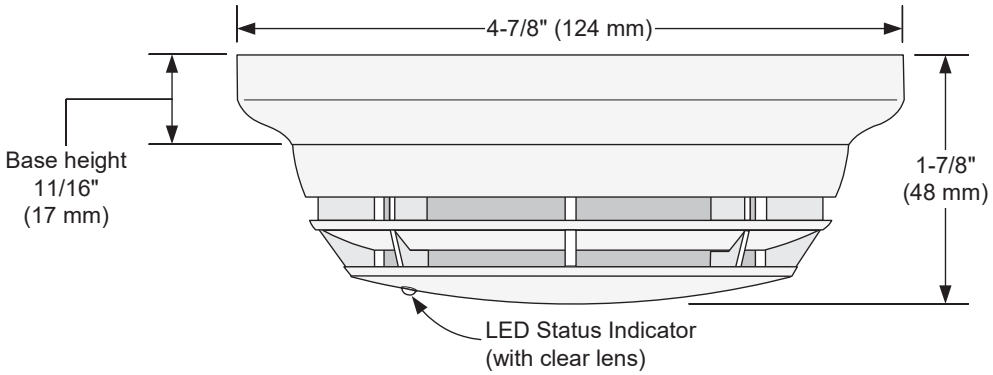

4098-9601 & -9605 Dimensions Mounted on Base

4098-9830 Remote LED Indicator (not to scale)

Mounting Information

(Electrical boxes are supplied by others.)

Electrical Box Requirements:
Without relay (base 4098-9788):
4" octagonal or 4" square, 1-1/2" deep
Single gang, 2" deep
With relay (bases 4098-9682 and 4098-9683):
4" octagonal, 1-1/2" deep, with 1-1/2" extension ring
4" square, 1-1/2" deep, with 1-1/2" extension ring

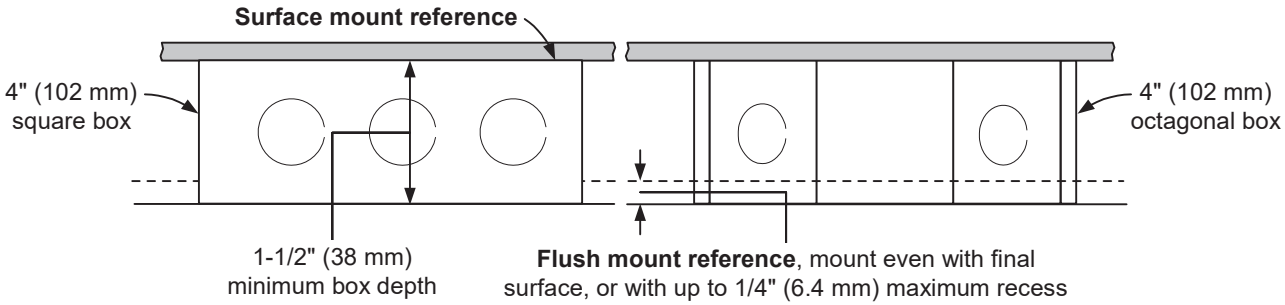

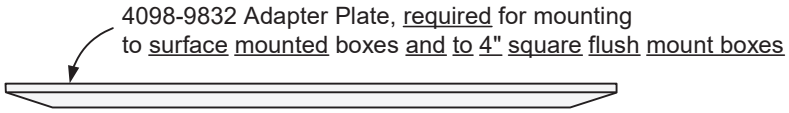

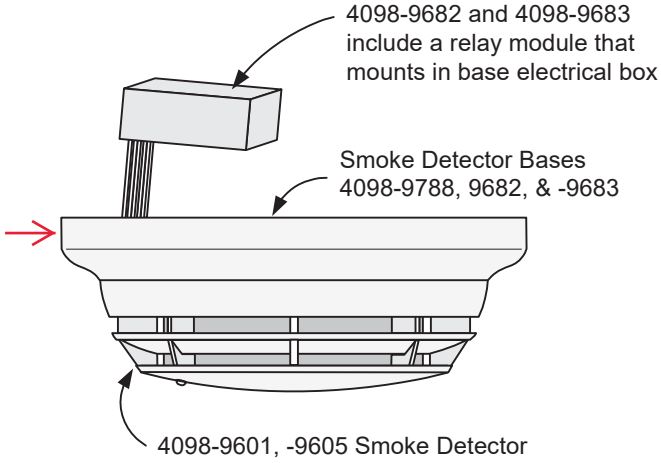

TYCO, SIMPLEX, and the product names listed in this material are marks and/or registered marks. Unauthorized use is strictly prohibited. NFPA 72 and National Fire Alarm and Signaling Code are registered trademarks of the National Fire Protection Association (NFPA).

© 2015 Tyco Fire Protection Products. All rights reserved. All specifications and other information shown were current as of document revision date and are subject to change without notice.

Simplex

Multi-Application Peripherals

*UL, ULC, CSFM Listed; FM Approved; MEA (NYC) Acceptance**

IDNet and MAPNET II Communicating Devices, Individual Addressable Modules (IAMs)

Features

IDNet or MAPNET II addressable communications supply both data and power over a single wire pair to provide:**

- Supervised Class B monitoring of normally open, dry contacts
- Total wiring distance from IAM to supervision resistor(s) of up to 500 ft (152 m)
- Monitored connection is compatible with Simplex® 2081-9044 Overvoltage Protectors for outdoor wiring or electrically noisy applications
- For use in indoor locations up to 158° F (70° C) such as attic spaces or similar applications

For use with following Simplex control panels:

- Model Series 4007ES, 4008, 4010, 4010ES, and 4100ES fire alarm control panels for IDNet communications
- Model Series 4100/4100U/4100ES, 4120, 4020, and 2120 Communicating Device Transponders (CDTs) equipped with MAPNET II communications

Model 4090-9001:

- Enclosed design minimizes dust infiltration
- Mounts in standard single gang electrical box
- Screw terminals for wiring connections
- Visible LED flashes to indicate communications
- Optional covers are available to allow LED to be viewed after installation (requires mounting bracket, ordered separately)

Model 4090-9051:

- Encapsulated design for extended exposure to high humidity (LED is not present on this model)
- Color coded 18 AWG leads for wiring

IDNet communications provides current limited monitoring:

- Provides monitoring of tamper switch (supervisory) and waterflow switch (alarm) on same circuit using one point
- Available with IDNet communications only

Multiple operation modes are available and are selectable at the control panel:

- Contact closure status can be tracked
- Momentary contact closure conditions can be selected at the panel to be latched or tracked (not available with the 2120 CDT)

UL listed to Standard 864

* These products have been approved by the California State Fire Marshal (CSFM) pursuant to Section 13144.1 of the California Health and Safety Code. See CSFM Listing 7300-0026:223 for allowable values and/or conditions concerning material presented in this document. Accepted for use – City of New York Department of Buildings – MEA35-93E. Additional listings may be applicable; contact your local Simplex product supplier for the latest status. Listings and approvals under Simplex Time Recorder Co. are the property of Tyco Fire Protection Products .

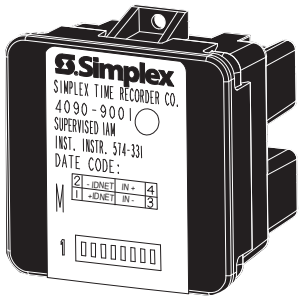

4090-9001 Supervised IAM
(shown approximately 3/4 size)

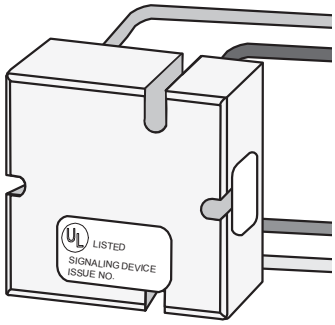

4090-9051 Supervised IAM
(shown approximately 3/4 size)

Description

Individual addressable modules (IAMs) receive both power and communications from a two-wire MAPNET II or IDNet circuit. They provide location specific addressability to a single initiating device (such as single station smoke detector alarm contacts or heat detector contacts) or multiple devices at the same location by monitoring normally open dry contacts and the wiring to an end-of-line resistor.

Model 4090-9001 is packaged in a thermoplastic housing and provides screw terminal connections and a status indicating LED.

Model 4090-9051 is an encapsulated package with wire leads. It does not provide a status indicating LED.

Operation

Contact Closure. Closure of the monitored contact(s) initiates an alarm or other response as programmed at the fire alarm control panel. An open in the monitored circuit wiring will cause a trouble to be reported.

Panel Selections. Selections can be made at the control panel to maintain the alarm condition if the initiating device contacts are momentary, such as from a rate-of-rise heat detector, or to track the device contact status (not available with the 2120 CDT).

Current Limited Operation Applications

For use with IDNet communications only, these IAMs can provide quad-state sensing of normal, open circuit, short circuit, and current limited conditions. (Program type is "T-sense.") With the proper end-of-line and current limiting resistors, dual functions such as tamper switch and waterflow switch monitoring can be determined and communicated by a single addressable point.

IAM Product Selection

Model	Description
4090-9001	Supervised IAM, mounted in thermoplastic housing with screw terminals; see applicable options below
4090-9051	Supervised IAM, encapsulated with wire leads

Optional Trim Plates and Mounting Bracket for Model 4090-9001

Model	Description
4090-9806	For semi-flush mounted box — Trim plate with LED viewing window, requires 4090-9810 mounting bracket, includes mounting screws; galvanized steel
4090-9807	For surface mounted box
4090-9810	Mounting bracket, mounts IAM to electrical box and provides screw holes for trim plate, **required for optional trim plates**

End-of-Line Resistor Harnesses (ordered separately as required)

Model	Reference No.	Description
4081-9004	733-886	6.8 kΩ, 1/2 W; Standard end-of-line resistor harness for N.O. contact supervision
4081-9003	733-896	4.7 kΩ, 1/2 W — Use for current limited monitoring applications
4081-9005	733-984	1.8 kΩ, 1/2 W

Specifications

Electrical

Power and Communications		MAPNET II or IDNet, auto selected, 1 address per IAM
Input Requirements		Normally open, dry contacts
Wire Connections	4090-9001	Screw terminals for in/out wiring, 18 to 14 AWG wire (0.82 mm^2 to 2.08 mm^2)
	4090-9051	Color coded wire leads, 18 AWG (0.82 mm^2), 8" long (203 mm)
Reference Documents	Installation Instructions	574-331 for 4090-9001; 579-572 for 4090-9051
	Field Wiring Diagrams	842-073 for IDNet operation; 841-804 for MAPNET II operation

Wiring Distances

Distance from IAM to Contacts	500 ft (152 m) maximum without protectors
	400 ft (122 m) maximum with 2081-9044 Overvoltage Protectors
Wiring Distance Reference per channel, MAPNET II or IDNet Communications	2500 ft (762 m) maximum from fire alarm control panel
	10,000 ft (3048 m) maximum total wiring distance (including T-Taps)

Mechanical

Dimensions	4090-9001	1-9/16" W x 1-3/4" H x 1-1/4" D (40 mm x 44 mm x 32 mm)
	4090-9051	1-9/16" W x 1-9/16" H x 9/16" D (40 mm x 40 mm x 14 mm)
Housing Material, 4090-9001		Black thermoplastic
Encapsulation Material, 4090-9051		Epoxy, beige
Temperature Range		32° to 158° F (0° to 70° C); intended for indoor operation
Humidity Range		Up to 93% RH at 100° F (38° C)

Mounting Information

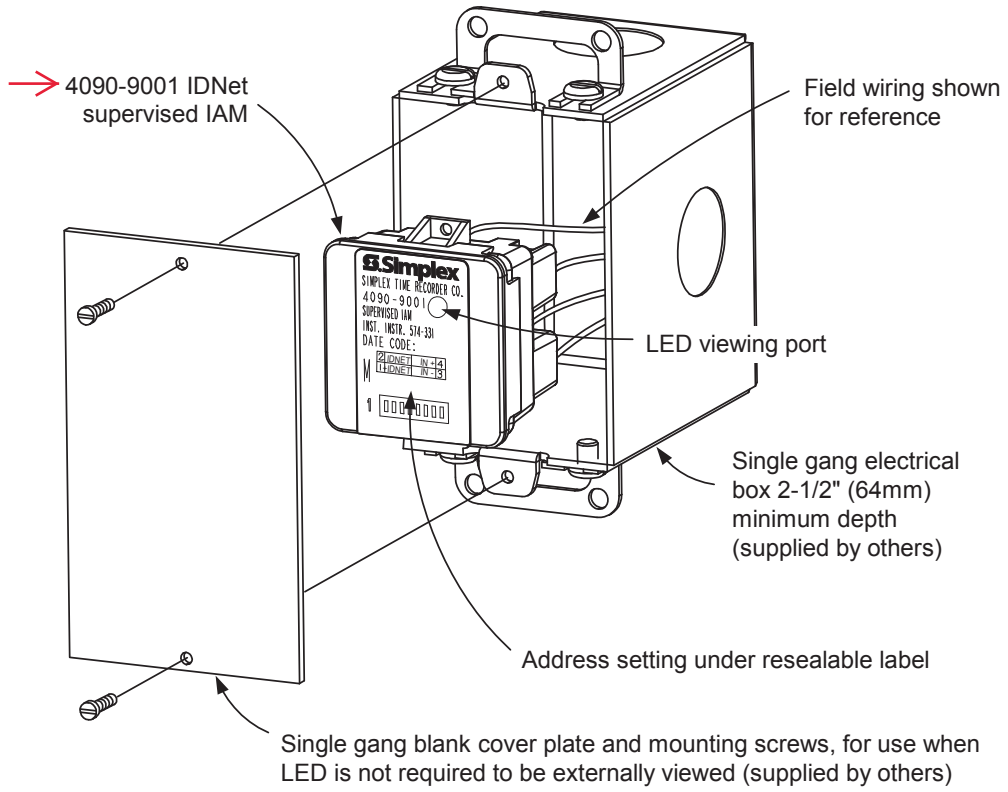

Mounting Reference, Single Gang Blank Cover Plate

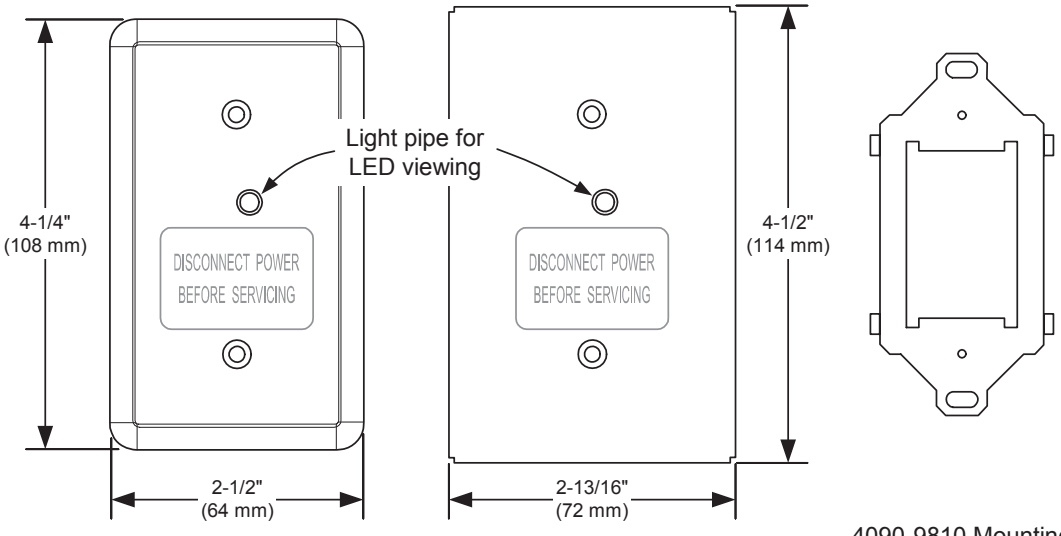

4090-9806, Trim plate for semi-flush mounted box

4090-9807, Trim plate for surface mounted box

4090-9810 Mounting bracket, ordered separately

NOTE: These mounting plates require mounting bracket 4090-9810.

Optional Trim Plates and Mounting Bracket for Visible LED

4090-9051 Mounting Information

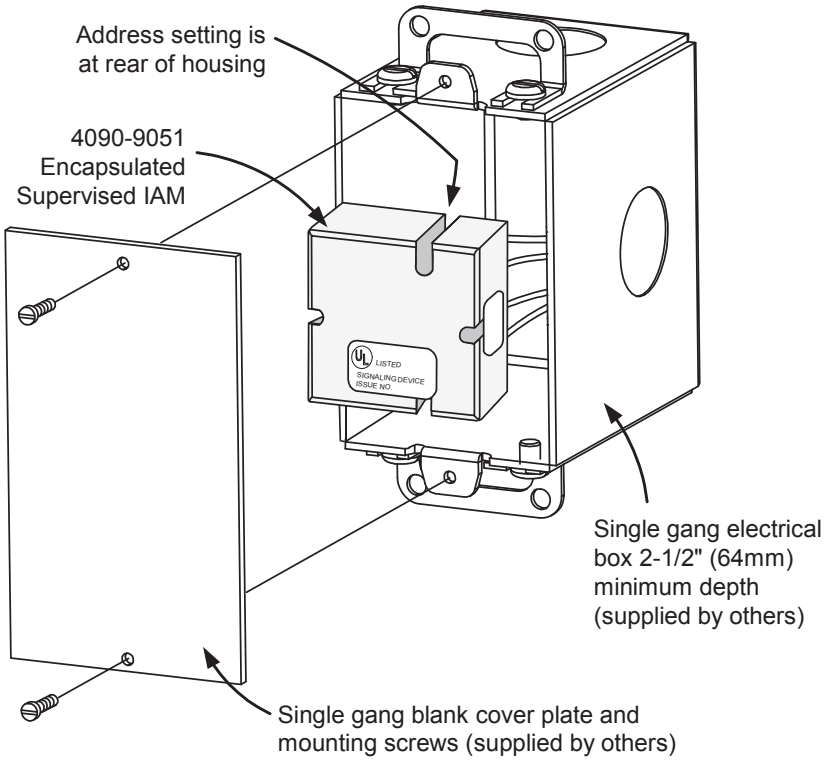

© 2016 Tyco Fire Protection Products. All rights reserved. All specifications and other information shown were current as of document revision date and are subject to change without notice.

RSN: 1523729
Permit # 2021-1939814-LT
Sheet 38 of 51

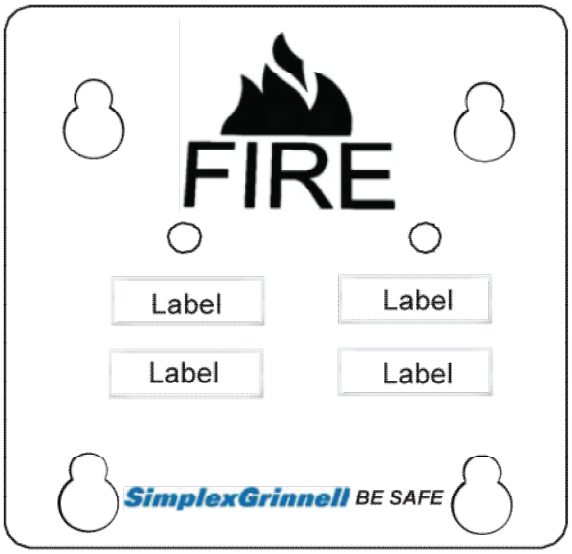

Standard 4" square mounting plate

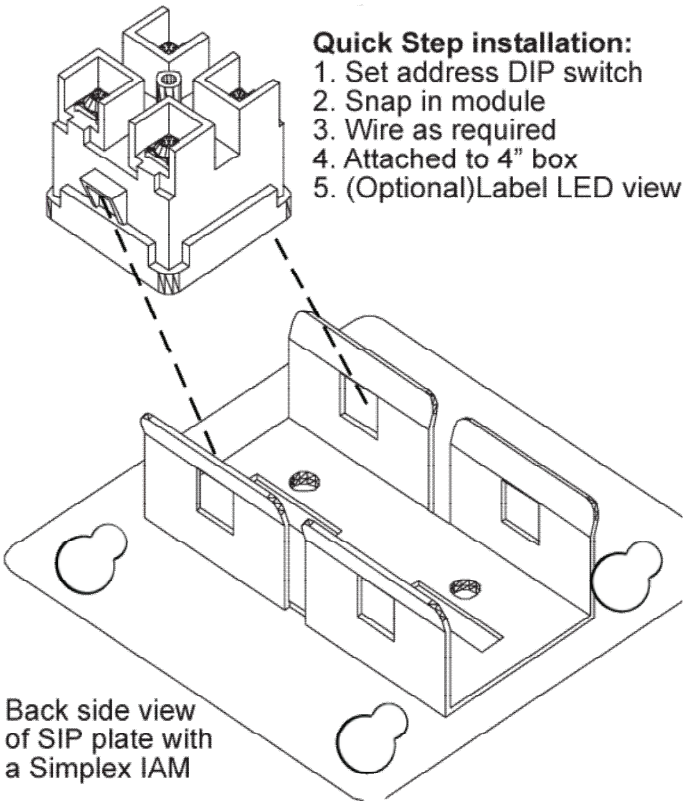

→ YJ1263

Simplex

*UL Listed**

System Accessories

4081 Series End-of-Line Resistor Harnesses

Features

For use as Class B end-of-line resistor:

- Connect these resistor harnesses where end-of-line resistors are required at remote locations to monitor wiring continuity
- Refer to specific circuit specifications for end-of-line resistor requirements

UL Listed to Standard 864

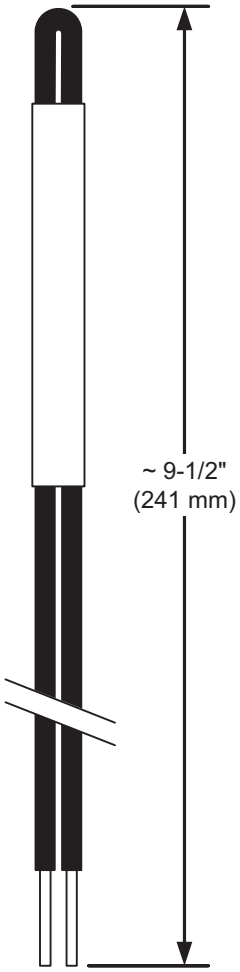

Typical 4081 Series Resistor Harness Assembly
(full size except for lead length)

Product Selection

Model	Reference Number	Description**
4081-9001	733-892	2.2 kΩ, 1/2 W
4081-9002	733-893	3.3 kΩ, 1 W
4081-9003	733-896	4.7 kΩ, 1/2 W
4081-9004	733-886	6.8 kΩ, 1/2 W
4081-9005	733-984	1.8 kΩ, 1/2 W
4081-9006	733-890	560 Ω, 1 W
4081-9007	733-891	1.2 kΩ, 1 W
4081-9008	733-894	10 kΩ, 1/2 W
4081-9009	733-912	20 Ω, 1 W
4081-9010	733-973	1 kΩ, 1 W
4081-9011	733-974	100 Ω, 1/2 W
4081-9012	733-985	22 kΩ, 1/2 W
4081-9013	734-086	4.99 kΩ, 1/2 W, ± 1%
4081-9014	734-092	2.4 kΩ, 1/2 W
4081-9015	734-093	1.5 kΩ, 1/2 W
4081-9016	734-149	150 kΩ, 1/2 W
4081-9017	734-171	3.9 kΩ, 1 W
4081-9018	734-168	10 kΩ, 1 W

** ± 5% tolerance except as noted.

Specifications

Overall Length	Approximately 9-1/2” (241 mm)
Wire Length	7” (178 mm) ± 1” (25 mm)
Wire Size	18 AWG (0.82 mm^2)
Insulation	600 V, black
Leads	Stripped 0.5” (13 mm); tinned
Resistor Attachment	Resistor leads are crimped to wires and covered with heat shrink tubing

* This product was not approved by ULC, FM, MEA (NYC), or CSFM as of document revision date. Additional listings may be applicable, contact your local Simplex® product supplier for the latest status. Listings and approvals under Simplex Time Recorder Co. are the property of Tyco Safety Products Westminster.

Tyco, Simplex, and the Simplex logo are trademarks of Tyco International Services AG or its affiliates in the U.S. and/or other countries.

© 2004 Tyco Safety Products Westminster. All rights reserved. All specifications and other information shown were current as of document revision date and are subject to change without notice.

Simplex

TrueAlert ES Addressable Notification Appliances

*UL, ULC, CSFM Listed**
*FM Approved**

Audible/Visible Notification Appliances;
Multi-Tone Horn/Strobe with 520 Hz Output

Features

Individually addressed and controlled multi-tone and multi-candela TrueAlert ES A/V (audible/visible) notification appliances provide:

- Multi-candela xenon strobe with synchronized 1 Hz flash rate and with intensity ***programmable from the control panel*** or jumper selected as 15, 30, 75, 110, 135, or 185 cd
- Advanced addressable notification controlled by ***IDNAC SLCs*** providing ***regulated 29 VDC*** allowing strobes to operate with lower current even under battery backup
- Wiring supervision to each appliance allowing "T-tapped" connections for Class B circuits to simplify wiring (Class A circuits require in/out wiring)
- ***Self-Test Mode*** allows on-board sensors to detect the strobe and horn output and then report their status to the control panel
- Per appliance tone selection of: 520 Hz Horn, Broadband Horn, Bell, Chime, High/Low, Slow Whoop, or Siren; *programmable from the control panel*, or selected using an on-board DIP Switch (refer to sound output details on page 4)
- 520 Hz tone is compliant with NFPA 72 Low Frequency Signal Requirements for Sleeping Areas
- Horn, Bell, and High/Low tones can be controlled as: Temporal Code 3, Temporal Code 4, March Time (selectable as 20, 60, or 120 bpm), or Continuous
- Slow Whoop, Siren, and Chime tone selections are controlled as synchronized continuous operation
- Output of "high" or "low" (~6 dBA difference) selectable at the appliance or from the controller with FACP mode selected at the appliance
- ***TrueAlert Device Reports*** at the control panel detailing appliance point ID, custom label, type, and candela setting (see sample on page 3)
- ***Magnet Test diagnostics*** to assist checkout and testing of appliances and wiring
- ***Electrical test point access*** without removing cover
- Compatibility with ADA requirements; (refer to important installation information on page 3)
- Strobe operation is listed to UL Standard 1971 and ULC Standard S526; Horn operation is listed to UL Standard 464 and ULC Standard S525

LED Indicator and Magnet Test feature:

- Appliance LED can be selected to display each polling cycle to indicate appliance supervision
- When the controller is in diagnostic mode, the Magnet Test pulses the LED to indicate appliance address and can be set to also briefly flash the strobe and sound the horn

TrueAlert ES Multi-Tone Addressable A/Vs are Available in Red with White Lettering and White with Red Lettering

Features *(Continued)*

Mechanical design features include:

- Rugged, high impact, flame retardant thermoplastic housing in red with white letters or white with red letters, with clear lens, available with FIRE, FEU, ALERT, FEU/FIRE, or blank lettering
- Separate covers are available to change application type on-site or for replacement; covers can be easily removed without disturbing the connected housing and avoiding trouble conditions
- A separate mounting plate allows wiring to be completed before appliance is mounted; use with single gang, double gang, or 4-inch square box, flush or surface mount
- In/out wiring terminals for 18 AWG to 12 AWG
- Optional mounting adapters are available to cover surface mounted electrical boxes and to adapt to Simplex 2975-9145 boxes

Description

TrueAlert ES addressable multi-tone A/Vs are individually addressed audible/visible notification appliances that receive power, supervision, and control signals from a Simplex fire alarm control panel providing **IDNAC** Signaling Line Circuits (SLCs). (See compatibility list on page 4.)

Strobe Application Reference

Proper selection of visible notification is dependent on occupancy, location, local codes, and proper applications of: the *National Fire Alarm Code* (NFPA 72), ANSI A117.1; the appropriate model building code: BOCA, ICBO, or SBCCI; and the application guidelines of the Americans with Disabilities Act (ADA).

* This product has been approved by the California State Fire Marshal (CSFM) pursuant to Section 13144.1 of the California Health and Safety Code. See CSFM Listing 7135-0026:0380 for allowable values and/or conditions concerning material presented in this document. Additional listings may be applicable; contact your local Simplex product supplier for the latest status. Listings and approvals under Simplex Time Recorder Co. are the property of Tyco Fire Protection Products.

TrueAlert ES Operation Advantage

TrueAlert ES addressable appliances on IDNAC SLCs provide separate visible and audible notification using a single two-wire circuit that also *confirms connection to the individual notification appliance's electronic circuit*. This operation increases circuit supervision integrity by providing supervision that extends beyond the appliance wiring connections.

Reduced current allows efficient IDNAC SLC operation. With ***IDNAC SLCs***, a ***constant*** 29 VDC source voltage is maintained, even during battery standby, allowing strobes to operate at higher voltage with lower current and ensuring a consistent current draw and voltage drop margin under both primary power and secondary battery standby. Efficiencies include wiring distances up to 2 to 3 times farther than with conventional notification, or support for more appliances per IDNAC SLC, or use of smaller gauge wiring, or combinations of these benefits, all providing installation and maintenance savings with high assurance that appliances that operate during normal system testing will operate during worst case alarm conditions.

Reducing Installation and Testing Time. With separate controls on the same two-wire SLC, installation time and expense for both retrofit and new construction can be significantly reduced. When Class B wiring is used, *wiring can be "T" tapped*, allowing more savings in distance, wire, conduit (size and utilization), and overall installation efficiency. Use of Self-Test and Magnet Test features improve installation efficiency. TrueAlert device reports conveniently identify information about each connected appliance.

TrueAlert ES Diagnostics

Test Features. When IDNAC SLCs are in diagnostic mode, *Self-Test* and *Magnet Test* features provide individual appliance testing. With the *Self-Test* feature, *appliance operation can be confirmed without leaving the control panel.* Additionally, each appliance's LED can be selected to pulse when it receives a supervision poll during normal operation.

***Self-Test* Details.** Selecting Self-Test Mode from the control panel allows on-board sensors, depending on the device type, to detect its own strobe and/or horn output and then report their status to the control panel. Operation is by selected VNAC appliance groups and is either automatic (all briefly simultaneously activated) or individually activated by applying a magnet. (Refer to control panel data sheet for more Self-Test information, see list on page 4.)

Silent Appliance Magnet Test. In this test mode, in response to application of a magnet, the appliance LED pulses sequentially to conveniently indicate the appliance's address.

Operational Appliance Magnet Test. In this test mode, after the address is indicated by pulsing the appliance LED, the strobe will briefly flash and the horn will briefly sound to indicate proper operation.

TrueStart Instrument Two (TSIT). The 2nd generation of the Simplex TrueStart Test Instrument adds testing of IDNAC SLC wiring and TrueAlert ES appliances to its ability to test IDCs, NACs, and IDNet communications *before connection to the control panel*. Please contact your local Simplex representative for additional information.

TrueAlert Addressable Wiring Isolator

Isolator Model 4905-9929 is available for remote mounting on TrueAlert addressable circuits to isolate short circuited wiring from functioning wiring. (See data sheet S4905-0001.)

Product Selection

TrueAlert ES Wall Mount Multi-Tone Addressable Audible/Visible Appliances

TrueAlert ES multi-tone addressable A/V appliances include cover and matching mounting plate except as noted;
Dimensions with Cover = 5 ⅛" H x 5" W x 2 ⅝" D (130 mm x 127 mm x 67 mm)

Model*	Cover Color	Wording	Lens Color	Model*	Cover Color	Wording	Lens Color
49MTV-WRF(-BA)	Red	FIRE	Clear	49MTV-WRS-BA	Red	Blank	Clear
49MTV-WWF(-BA)	White			49MTV-WWS-BA	White		
49MTV-APPLW(-BA)	Select cover and mounting plate separately						

Separate Mounting Plate (Required when ordering model 49MTV-APPLW(-BA))

Model*	Color	Model	Color	Note
49MP-AVVOWR	Red	49MP-AVVOWW	White	Mounting Plate, select color to match cover

*** Note:** (-BA) indicates model is available either with or without the -BA suffix. Model numbers ending in -BA, APPLW models, and separate mounting plates are assembled in the USA.

Separate Covers (Required when ordering model 49MTV-APPLW(-BA), uses same covers as 49AV Series fixed tone A/Vs)

Model	Color	Wording	Model	Color	Wording
49AVC-WRFIRE	Red	FIRE	49AVC-WRFEU	Red	FEU
49AVC-WWFIRE	White		49AVC-WWFEU	White	
49AVC-WRALT	Red	ALERT	49AVC-WRBLNG	Red	FEU/FIRE
49AVC-WWALT	White		49AVC-WWBLNG	White	
49AVC-WRS	Red	Logos Only	49AVC-WWS	White	Logos Only

Mounting Adapters

Model	Color	Description	Dimensions
4905-9937	Red	Surface Mount Adapter Skirt	5 ⅜" H x 5 ¼" W x 1 ⅝" D (136 mm x 133 mm x 41 mm) Total depth with strobe = 4 ⅜" (111 mm)
4905-9940	White		
4905-9931	Red Adapter Plate for mounting to Simplex 2975-9145 Box (typically for retrofit, mount vertical or horizontal)		8 $\frac{5}{16}$" x 5 ¾" x 0.060" Thick (211 mm x 146 mm x 1.5 mm)
2975-9145	Red Mounting Box, requires 4905-9931 Adapter Plate		7 ⅞" x 5 ⅛" x 2 ¾" D (200 mm x 130 mm x 70 mm)

TrueAlert Device Reports Reference

Service Port — Page 1
REPORT 5 : TrueAlert Device Report — 12:34:56am TUE 10-Mar-15

POINT ID	CUSTOM LABEL	DEVICE TYPE	CANDELA
T14-1-1	Location Label . . . up to 40 characters	MT AV	15
T14-1-2	Break Room 5	MT AV	110
T14-1-3	Boiler Room	VO	75
T14-1-4	Elec. Room 7	AV	135

Installation Reference

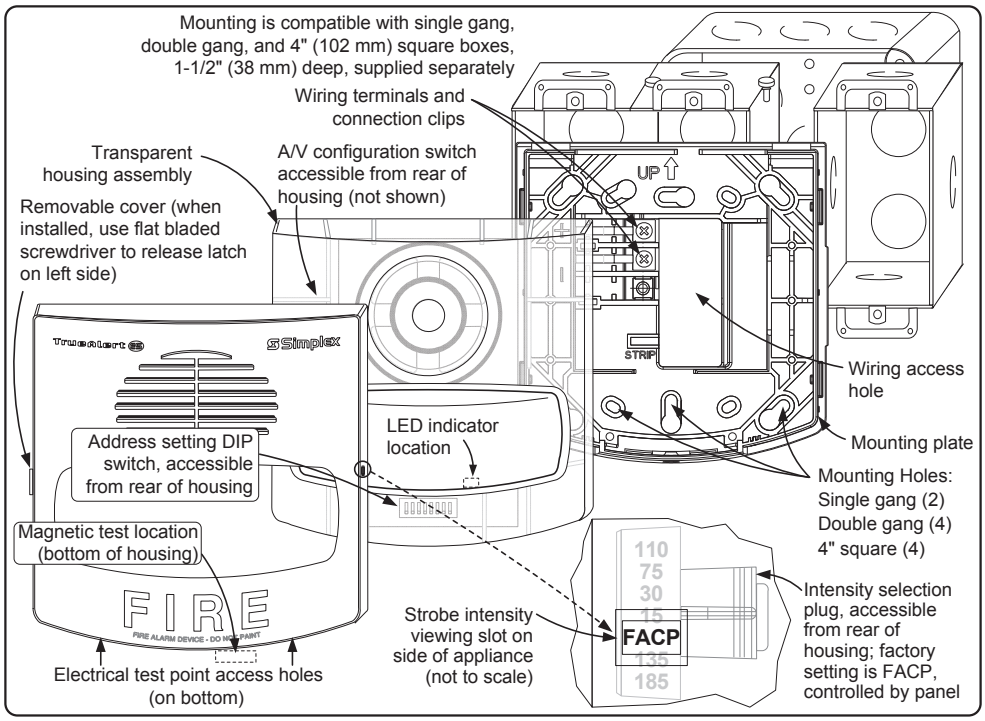

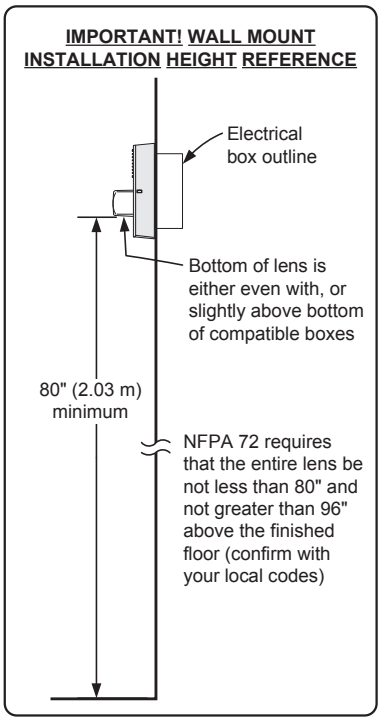

Adapter Plate and Surface Mount Installation Reference

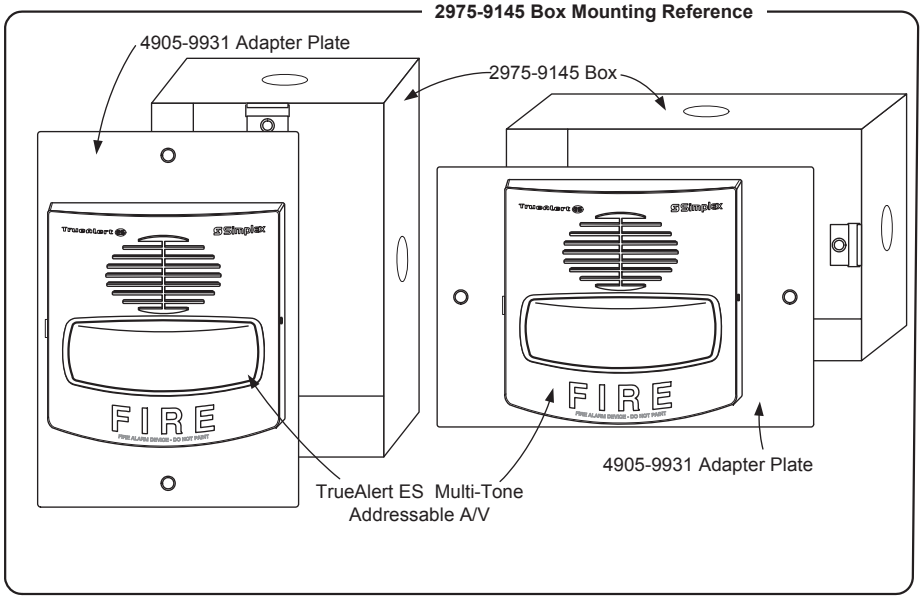

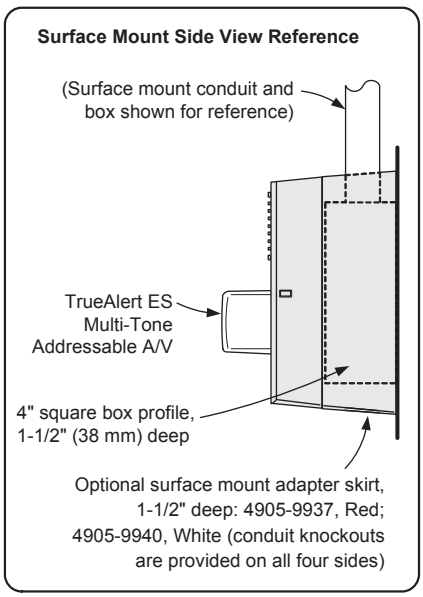

IDNAC SLC Controller Compatibility Reference

Compatible Controllers	Data Sheet Reference	Controller Output	IDNAC SLC Output Voltage	Appliance Voltage Design Reference
4100ES with EPS+ or EPS Power Supply	S4100-0100	IDNAC SLC	29 VDC (regulated)	23 VDC (with 6 VDC drop)
4009 IDNAC Repeater	S4009-0004			
4007ES with IDNAC Notification	S4007-0002			
4010ES with ESS Enhanced System Supply	S4010-0011			

TrueAlert ES A/V Specifications

Electrical Ratings	Typical Operating Voltage Range	23 VDC to 29.5 VDC, Special Application
	Supervisory Requirements	2 unit loads (1 unit load = 0.8 mA control panel current)
	49MTV Series SLC Loading	Up to 21 appliances can connect directly to the panel IDNAC SLC or to a 4009 IDNAC Repeater output, to a maximum of 127 addresses and 139 unit loads per SLC
IDNAC SLC Wiring Specifications (refer to control panel or power supply installation instructions for more information)		UTP, unshielded twisted pair recommended
		Maximum wire length allowed with "T-Taps" for Class B wiring per SLC = 10,000 ft (3048 m)
		Maximum wire length to any appliance = 4000 ft (1219 m)

Tone Characteristics

520 Hz Horn	520 Hz tone	These tones are compatible with control panel IDNAC commands for operation as Temporal Code 3, Temporal Code 4, March Time at 20, 60, or 120 bpm, or Continuous operation
Broadband Horn	Combination 600/3000 Hz signal	
Bell	Synthesized Bell tone	
High/Low	Alternating modulated tones with fundamentals of 1000 Hz and 800 Hz, 250 ms duration each	
Slow Whoop	Modulated 520 Hz to 1200 Hz sweep with 2 s duration	These tones operate as Continuous with synchronization
Siren	Modulated 600 Hz to 1200 Hz to 600 Hz sweep, with 2 s duration	
Chime	Multi-phase signal with a peak and decay time of 1 s	

TrueAlert ES Multi-Tone Horn/Strobe Current Ratings

	RMS Current Ratings @ 23 VDC, in mA											
	15 cd		30 cd		75 cd		110 cd		135 cd		185 cd	
Tone	**High**	**Low**	**High**	**Low**	**High**	**Low**	**High**	**Low**	**High**	**Low**	**High**	**Low**
520 Hz Horn and High/Low	145	108	163	125	198	158	230	195	262	214	299	257
Broadband Horn, Bell, Chime, Slow Whoop, and Siren	135	99	152	111	185	139	212	172	247	203	284	243

TrueAlert ES Multi-Tone Horn/Strobe Horn Output

		UL 464 Output Ratings @ 23 VDC and 29.5 VDC (dBA)*								ULC S525 Output Ratings @ 23 VDC and 29.5 VDC (dBA)*							
		Steady High		Steady Low		Coded High		Coded Low		Steady High		Steady Low		Coded High		Coded Low	
Tone	**Voltage**	**23**	**29.5**	**23**	**29.5**	**23**	**29.5**	**23**	**29.5**	**23**	**29.5**	**23**	**29.5**	**23**	**29.5**	**23**	**29.5**
520 Hz Horn		80	80	74**	75	76	76	70**	71**	83†		79†		83†		78†	
High/Low		81	82	77	77	75	76	70**	71**	87		82†		86†		82†	
Broadband Horn		84	84	79	79	81	81	74**	75	88		84†		87†		83†	
Bell		80	80	75	75	76	76	71**	71**	85		80†		85†		80†	
Slow Whoop		79	80	74**	75	these tones are not used for coded operation				85		80†		these tones are not used for coded operation			
Siren		79	80	74**	75					85		80†					
Chime**		67**	67**	62**	62**					82†		77†					

* Output ratings are at 10 ft (3 m); UL 464 ratings are per UL Reverberant Chamber testing; ULC S525 ratings are per ULC Anechoic Chamber testing. The tone generator circuit is DC-DC converter powered and provides essentially constant output over the rated voltage range.

** UL output ratings below 75 dBA are for NFPA 72 Private Mode applications.

† ULC output ratings below 85 dBA are for use in applications per applicable local codes.

Sound Output Dispersion per ULC S541 Anechoic Testing	Horizontal	-3 dBA @ ±37°	-6 dBA @ ±40°	-9.4 dBA @ ±90°
	Vertical	-3 dBA @ -24°, +42°	-6 dBA @ -59°, +50°	-8.6 dBA @ ±90°

General Specifications

Temperature Range	32° to 122° F (0° to 50° C)
Humidity Range	10% to 93%, non-condensing @ 104° F (40° C)
Connections	Terminal blocks on mounting plate for 18 AWG to 12 AWG (0.82 mm^2 to 3.31 mm^2); two wires per terminal for in/out wiring
Installation Instructions	579-1156 for 49MTV Series A/V appliances
	579-1100 for 49MP Series mounting plates

TYCO, SIMPLEX, and the product names listed in this material are marks and/or registered marks. Unauthorized use is strictly prohibited. NFPA 72 and National Fire Alarm Code are trademarks of the National Fire Protection Association (NFPA).

© 2016 Tyco Fire Protection Products. All rights reserved. All specifications and other information shown were current as of document revision date and are subject to change without notice.

Simplex

*UL, ULC, CSFM Listed; FM Approved**

TrueAlert ES Addressable Notification Appliances

Visual Only Notification Appliances, Indoor Ceiling Mount Strobe, Model Series 49VO

Description

Ceiling Mount Addressable Visible (V/O) Notification Appliances are individually powered, addressed, and controlled from a Simplex fire alarm control panel IDNAC Signaling Line Circuit (SLC). V/O notification appliances use a multi-candela strobe with synchronized 1 Hz flash rate and selectable candela rating. Xenon tube strobes devices are interoperable on the same IDNAC channel. Separate appliance and cover selection greatly simplifies the ordering and installation process.

Features

Individually addressed Visible Only (V/O) notification appliances

- Multi-candela Xenon strobe available in low (15 cd, 30 cd, 75 cd and 110 cd) and high (110 cd , 135 cd and 185 cd) range candela models
- Small compact design and low current draw due to energy efficient Xenon tube strobes, with LED indicators
- Advanced addressable notification controlled by ***IDNAC SLCs***.
- ***IDNAC SLCs*** provide ***regulated 29 VDC*** allowing horns to operate with lower current
- Electrical test point access by removing the cover
- Strobe intensity can be programmed from the control panel or the device
- Wiring supervision to each appliance allows T-tapped connections for Class B circuits to simplify wiring (Class A circuits require in/out wiring)
- Self-Test Mode allows on-board sensors to detect the strobe output and then report their status to the control panel
- TrueAlert Device Reports at the control panel detail appliance point ID, custom label, type, and candela setting
- Magnet test diagnostics assist checkout and testing of appliances and wiring
- Compatibility with ADA requirements
- Strobe operation is listed to UL Standard 1971 and ULC Standard S526
- Synchronized strobe operation on its IDNAC channel

LED Indicator and Magnet Test feature:

- Indicator LED indicates magnet test acknowledgment, 3 digit IDNAC address, and candela rating
- Indicator LED can be configured to blink every polling cycle to indicate appliance supervision
- When the controller is in diagnostic mode, the magnet test pulses the Indicator LED to indicate appliance address and can be set to also briefly flash the strobe LEDs

Mechanical design features

- Rugged, high impact, flame retardant thermoplastic housing in red and white colors
- Various covers and lettering options available – Red with white letters or white with red letters
- Covers can be easily removed without disturbing the connected housing and avoiding trouble conditions
- In/out wiring terminals for 18 AWG to 12 AWG
- Mounts on 4 in. square or single gang USA electrical boxes. Adapter plate required for mounting on single gang electrical boxes
- Optional wire guards
- Weatherproof back boxes are required for surface mounting

Figure 1: Indoor Ceiling Mount Strobe

Strobe application reference

Proper selection of visible notification is dependent on occupancy, location, local codes, and proper applications of: the National Fire Alarm and Signaling Code (NFPA 72), ANSI A117.1; the appropriate model building code: BOCA, ICBO, or SBCCI; and the application guidelines of the Americans with Disabilities Act (ADA).

TrueAlert Addressable Wiring Isolator

Isolator Model 4905-9929

Isolator Model 4905-9929 is available for remote mounting on TrueAlert addressable circuits to isolate short circuited wiring from functioning wiring. Refer to data sheet S4905-0001 for additional information.

TrueAlert ES Diagnostics

Test Features

Controllers can be selected to pulse each appliance's LED when it receives a supervision poll. When the controller is selected for diagnostic mode, the appliance magnet test feature provides a response at the individual appliance being tested.

Silent Appliance Magnet Test

The appliance LED pulses sequentially to conveniently indicate the appliance's address when a magnet is applied.

Operational Appliance Magnet Test

In this test mode, after the address is indicated by pulsing the appliance LED, the strobe will briefly flash to indicate proper operation.

TrueStart Instrument Two (TSIT)

The 2nd generation of the Simplex TrueStart Test Instrument adds testing of IDNAC SLC wiring and TrueAlert ES appliances to its ability to test IDCs, NACs, and IDNet communications *before connection to the control panel*. Contact your local Simplex representative for additional information.

* Additional listings may be applicable; contact your local Simplex product supplier for the latest status. Listings and approvals under Simplex Time Recorder Co.

RSN: 1523729
Permit # 2021-39[illegible]
Sheet 47 of 51

Installation reference

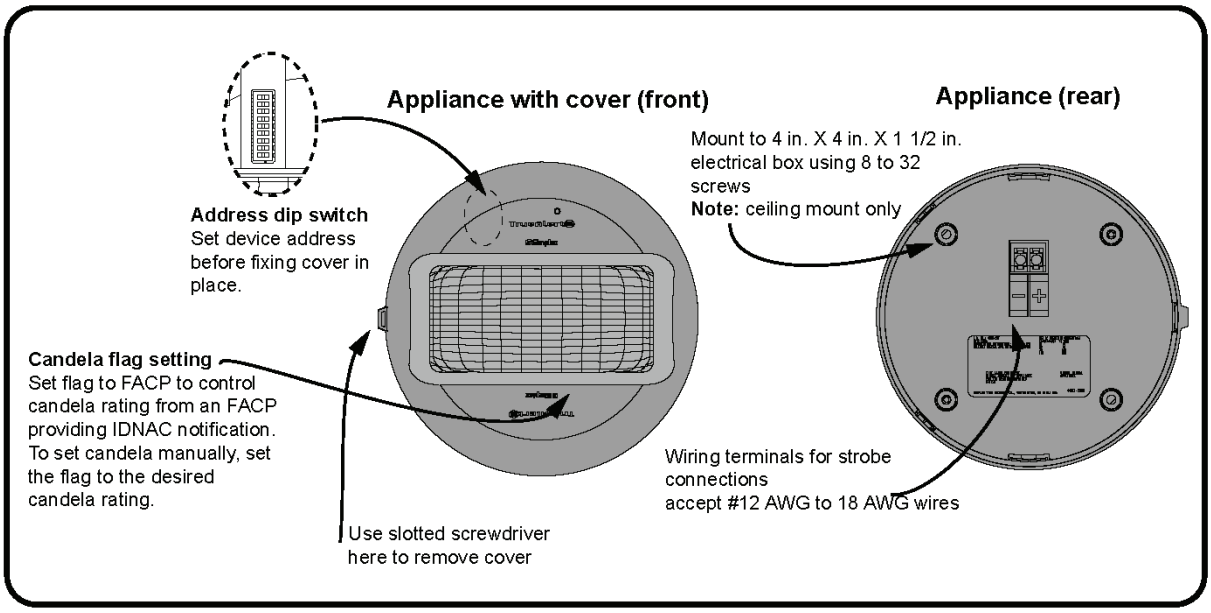

IDNAC SLC Operation Advantage

TrueAlert Addressable visible appliances on IDNAC SLCs

TrueAlert Addressable visible appliances on IDNAC SLCs provide visible notification using one two-wire circuit that also confirms connection to the individual notification appliance's electronic circuit. This operation increases circuit supervision integrity by providing supervision that extends beyond the appliance wiring connections.

Reduced current usage on IDNAC SLCs

A constant 29 VDC source voltage is maintained, even during battery standby. This allows appliances to operate at higher voltage with lower current and ensuring a consistent current draw and voltage drop margin under both primary power and secondary battery standby. Efficiencies include wiring distances up to 2 to 3 times farther than with conventional notification, support for more appliances per IDNAC SLC, use of smaller gauge wiring, or combinations of these benefits.

Reducing Installation and Testing Time

With separate controls on the same two-wire SLC, installation time and expense for both retrofit and new construction can be significantly reduced. When Class B wiring is used, wiring can be T-tapped, allowing more savings in distance, wire, conduit (size and utilization), and overall installation efficiency. Use of the magnet test feature improves installation efficiency. TrueAlert device reports conveniently identify information about each connected appliance.

Product Selection

Table 1: Ceiling mount addressable visual only V/O appliances

Model*	Lens color	Description	Installation Instructions
49VO-APPLC 49VO-APPLC-BA	Clear	VO appliance only. Select cover separately.	579-1227
49VOH-APPLC 49VOH-APPLC-BA			
49VOH-APPLCA	Amber		
49VOH-APPLCB	Blue		
49VOH-APPLCG	Green		579-1280
49VOH-APPLCR	Red		

Table 2: Surface/WP back boxes

Model	Color	Description	Installation instructions
49WPBB-VOCR	Red	Surface/WP back box in red	579-1270
49WPBB-VOCW	White	Surface/WP back box in white	

Note: Use WP back boxes for surface mounting only. Using weatherproof back boxes does not make an appliance weatherproof.

RSN: 1523729
Permit # 2021[illegible]
Sheet 48 of 51

Table 3: Adapter plates

Model	Description	Installation Instructions
49VO-APCS	VO Ceiling Mount Adapter Plate. Required for mounting on a single gang electrical box.	579-1227

Table 4: V/O covers (required when ordering APPLC models)

Model*	Color	Wording
49VOC-CRALT	Red	ALERT
49VOC-CRBF		FEU/FIRE
49VOC-CRFEU		FEU
49VOC-CRF		FIRE
49VOC-CRS		Simplex logo only
49VOC-CRBAA		إنذار/ALERT
49VOC-CRBCF		火警/FIRE
49VOC-CRBAF		حريق/FIRE
49VOC-CK	Black	Blank
49VOC-CWALT	White	ALERT
49VOC-CWBF		FEU/FIRE
49VOC-CWFEU		FEU
49VOC-CWF		FIRE
49VOC-CWS		Simplex logo only
49VOC-CWBAA		إنذار/ALERT
49VOC-CWBCF		火警/FIRE
49VOC-CWBAF		حريق/FIRE

Table 5: Wire guards

Model	Description
49WG-VOCR	VO Ceiling Mount Red Wire Guard
49WGBB-VOCR	VO Ceiling Mount Wire Guard Back Box

Note: * (-BA) indicates model is available either with or without the -BA suffix. Model numbers ending in –BA are assembled in the USA

IDNAC SLC Controller Compatibility Reference

Table 6: Compatibility reference

Compatible Controllers	Data Sheet Reference	Controller Output	IDNAC SLC Output Voltage	Appliance Voltage Design Reference
4100ES with EPS+ or EPS Power Supply	S4100-0100	IDNAC SLC	29 VDC (regulated)	23 VDC (with 6 VDC drop)
4009 IDNAC Repeater	S4009-0004			
4100ES Flex 35, 50, and 100 Amplifiers	S4100-0034			
4100ES Constant Supervision and Signal Cards				

RSN: 1523729
Permit # 2021-3998
Sheet 49 of 51

TrueAlert ES V/O LEGACY Compatibility Reference

Table 7: Compatibility reference

Compatible Controller	Data Sheet Reference	Controller Output	Available Strobe Intensity	Appliance Voltage Minimum
4100ES or 4100U with TrueAlert Power Supply	S4100-0031	TrueAlert Addressable SLC	15, 30, 75, and 110 cd	17 VDC
4009 TPS, Remote TrueAlert 17 VDC Power Supply*	S4100-0037			
TrueAlert Addressable Controller (4009T)	S4009-0003			
Electrical Ratings Differences for Legacy Applications (refer to above specifications for other ratings)				
Voltage Range		17 VDC to 31 VDC, Special Application		
Candela Setting	**15 cd**	**30 cd**	**75 cd**	**110 cd**
17 VDC RMS Current Ratings, with horn on continuousat high setting, use when connected to TrueAlertAddressable SLCs per above	73 mA	114 mA	210 mA	269 mA

* For connection to legacy fire panel models Simplex 4009T and 4100/TPS. High candela (49VOH) appliances are not compatible with Simplex models 4009T and TPS, see the fire panel compatibility charts.

Ceiling Mount V/O Specifications

Table 8: Specifications

Specification	Rating
Environmental	32°F to 120°F (0°C to 49°C); 10% to 93%, non-condensing at 104°F (40°C)
Connections	Terminal blocks for 18 AWG to 12 AWG (0.82 mm^2 to 3.31 mm^2); two wires per terminal for in/out wiring. Use Unshielded Twisted Pair (UTP) for IDNAC.
IDNAC SLC Loading	Maximum of 127 addresses per SLC, 139 unit loads. See device and compatible Fire Panel Installation Instructions for circuit current load limits.

Table 9: Percentage of rated light output at room temperature

Angle	On-Axis	Vertical, Below Axis		Horizontal, Left/Right of Axis	
	0°	**45°**	**90°**	**45°**	**90°**
UL required output	100%	45%	25%	45%	25%
Typical output	327%	134%	83%	129%	47%

Table 10: Appliance specifications

Specification		Rating						
Operating Voltage Range		23 VDC to 30 VDC, Special Application						
Supervisory Requirements		1 unit load (= 0.8 mA control panel current)						
Flash Rate and Synchronized SLC Loading		1 Hz; with up to 63 synchronized strobes maximum per powered circuit, max 127 S/V appliances per IDNAC channel						
Current consumption**	**Candela Setting**	**15 cd**	**30 cd**	**75 cd**	**90/95 cd**	**110 cd**	**135 cd**	**185 cd**
	49VO model	55 mA	83 mA	153 mA	N/A	199 mA	N/A	N/A
	49VOH model	N/A	N/A	N/A	N/A	253 mA	296 mA	377 mA
	49VOH amber lens	N/A	N/A	N/A	253 mA (90 cd)	296 mA	377 mA	N/A
	49VOH blue lens	N/A	N/A	253 mA	296 mA (95 cd)	377 mA	N/A	N/A
** Measured at 23 VDC on IDNAC Addressable SLC								

© 2020 Johnson Controls. All rights reserved. All specifications and other information shown were current as of document revision and are subject to change without notice. Additional listings may be applicable, contact your local Simplex® product supplier for the latest status. Listings and approvals under Simplex Time Recorder Co. Simplex, and the product names listed in this material are marks and/or registered marks. Unauthorized use is strictly prohibited. NFPA 72 and National Fire Alarm Code are registered trademarks of the National Fire Protection Association (NFPA).

NO EXCUSES!

UL LISTED

IF2

32 Point TTS Terminal Cabinet

The IF2 32 point “FIRE ALARM TERMINAL CABINET” is designed to enhance your fire alarm systems. Ideally suited for trouble shooting and maintenance with easy identification of system wiring.

This surface mount cabinet is fabricated from 16 gauge steel with a durable, baked on, red textured powder coat finish. White 2” highly visible lettering and a “lift-a-way” hinged door contribute to fast cabinet location and access. The door incorporates a high security CAT 30 keyed door lock.

The IF2 is UL listed for life safety under UL 864 Rev.9

The IF1 is supplied with the SAE Tool-Less terminal blocks, saving you time and effort in your installation. Testing the circuits can be accomplished with the use of the TTS Test Probe in the individual test ports.

Standard Features:

- Dimensions: 14” wide x 14” high x 3 1/4” deep
- NEMA 1 Rated Construction
- 16 Gauge Steel Construction
- Removable Back Plate
- Durable Red Textured Finish
- White 2” Indelible Lettering
  “FIRE ALARM TERMINAL CABINET”
- Lift-A-Way Hinge with CAT 30 Keyed Lock
- Terminals have “Built-in Test Point” w/o removing wires
- Field Identification Label Inside Cover
- 1/2”, 3/4”, 1”, 1 1/2” and 2” EMT knockout clusters
- 8 - 4 Circuit TTS (tool less) Terminal Strips
- Terminal Points Rated for 12 Gauge Wire
- Terminal Strips Rated for 20 Amp Max
- 250V (Class B/UL) 300V (CSA)

When properly installed, there will be no conductors exposed. All circuit testing can be performed via the individual test ports per circuit.

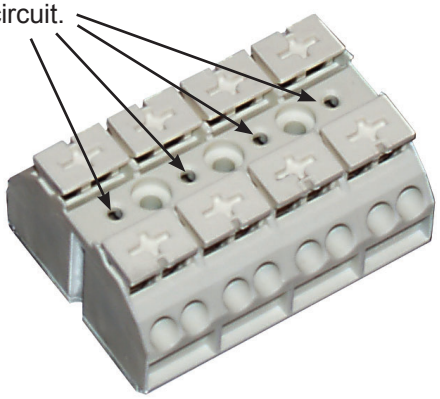

NEMA

- Uses UL Recognized Components

NFPA

Made In U.S.A.

ISO 9001 REGISTERED COMPANY

ADA

AceBox
Space Age Electronics, inc.
www.1SAE.com
800.486.1723 Toll Free
508.485.0966 Local
508.485.4740 Fax

No Excuses, Just Solutions!

SPACE AGE ELECTRONICS, INC.

Specification:

The **IF2 32 Point Terminal Cabinet** is constructed of 16 gauge (.062 thick) cold rolled steel and finished with a durable red textured, heat-resistant baked-on enamel finish. The front cover is engineered with a removable formed lift-a-way hinge and displays “FIRE ALARM TERMINAL CABINET” in 2” white screened indelible lettering. A CAT 30 keyed door lock secures the front cover. The interior of the box has field identification labels on the inside cover corresponding to the terminal strip’s labeling inside the back box. Overall dimensions measure 14” wide by 14” high by 3 1/4” deep. The cabinet includes 1/2”, 3/4”, 1”, 1 1/2” and 2” EMT knockout clusters on the top, bottom and left side. Eight - 4 circuit TTS terminal strips are rated for 12 gauge wire and 20 Amp max 250V (Class B/ UL) 300V (CSA). The use of copper conductors is suggested.

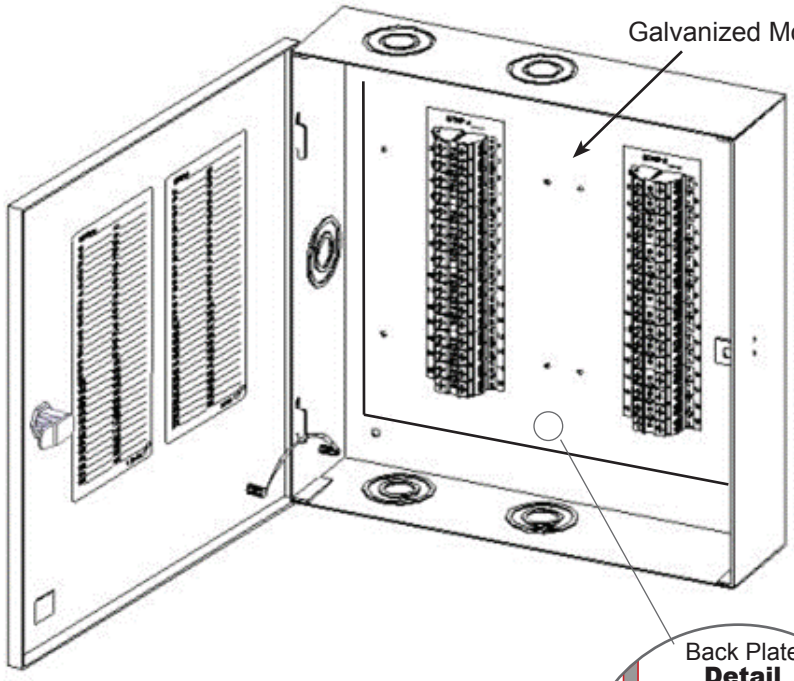

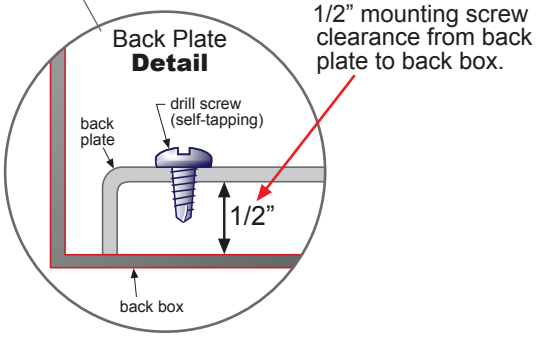

Ordering Information:

Part #	Description
SSU00660	IF2 32 Point Integration Cabinet

Agency Approvals:

UOXX.S2580 UL Listed Control Unit Accessories

Optional Accessories:

SAE ‘s Tooless Terminal Strip

PN	Description
SSU00470	TTS Black
SSU00471	TTS White
Sold Separately	
SSU00472	TTS Test Probe

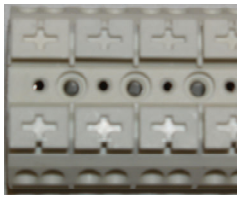

ACEBOX
Space Age Electronics, inc.
www.1SAE.com
800.486.1723 Toll Free
508.485.0966 Local
508.485.4740 Fax

No Excuses, Just Solutions!