Aurora All-America City 2008

City of Aurora Public Works Department

BUILDING PERMIT APPLICATION

Building Division • 15151 E. Alameda Parkway, Ste 2400 • Aurora, CO 80012 • 303-739-7420 • Fax: 303-739-7412
Email: ***permitcounter@auroragov.org***

Project Address 1400 S. POTOMAC ST		**Unit #** 180
Project Name: INVISION SALLY JOBE		
Contractor Company Name ABC FIRE PROTECTION	**Phone** 720-262-4530	**Fax** 720 262-4531
Contact Person STU WININGER	**Phone**	
Email STU@ABCFIRE.US		**Fax**
Architect and/or Engineer Contact information for correction items		
Architect or Engineer name	**Email**	
Phone	**Fax**	
Owner (Required for Certificate of Occupancy) only		
Owner address		
Email		
Valuation / FDA:$ $2600	**Materials Cost: $** 800	

FDA = Fee Determination Assessment. (Also known as the value of project) has no relationship to the construction costs for the building which can vary greatly. Rather, The assessment is used only to determine the appropriate level of fees to fund our code compliance activities.

Describe The Work You Will Be Doing: RELOCATE 8 HEADS
ADD 4 NEW HEADS
-ALL PENDENT

I declare under penalty that this application has been examined by me and that the statements made herein are made in good faith pursuant to City of Aurora tax and licensing regulations; and to the best of my knowledge and belief are true, correct and complete.

Print Name STUART WININGER **Signature** [signature] **Date** 4/14/2014

BOARD OF APPEALS: Contractor's Appeals and Standards Board. Applicants have the right to have the board hear appeals of orders, decisions or determinations made by the building official relative to the application and interpretation of the building code. Any application for appeal to the board shall be based on a claim that the true intent of the code or the rules legally adopted there under have been incorrectly interpreted, the provisions of the building code do not fully apply or an equally good or better form of construction is proposed.

THIS SPACE FOR OFFICE USE ONLY

Fee Determination Assessment: $ 2600

Change of occupancy/use: ☐ Yes ☐ No

REVIEWS	INSPECTIONS
☐ Structural	☐ Structural
☐ Mechanical	☐ Mechanical
☐ Plumbing	☐ Plumbing
☐ Electrical	☐ Electrical
☐ Fire-Life Safety	☒ Life Safety
☐ Building Life Safety	☐ Gate/Hazard

Intake Date: _____

Balance Due: $ _____

PRE APPROVAL Initial _____ ☐ Zoning ☐ Water

Exterior changes? ☐ Yes ☐ No

Homeowner verified: ☐ Yes ☐ No

Permit Type: CT

Mid roof / Ave Bldg Height: N/A

Parent Permit RSN: 875446

Plans Examiner: JDK

Subtype: Ex Sprinkler

RSN: 14-834414 / 886786

Plans Picked Up By: _____

Company Name: RSN: 886786

Phone Number Permit #: 2014-834414-CT

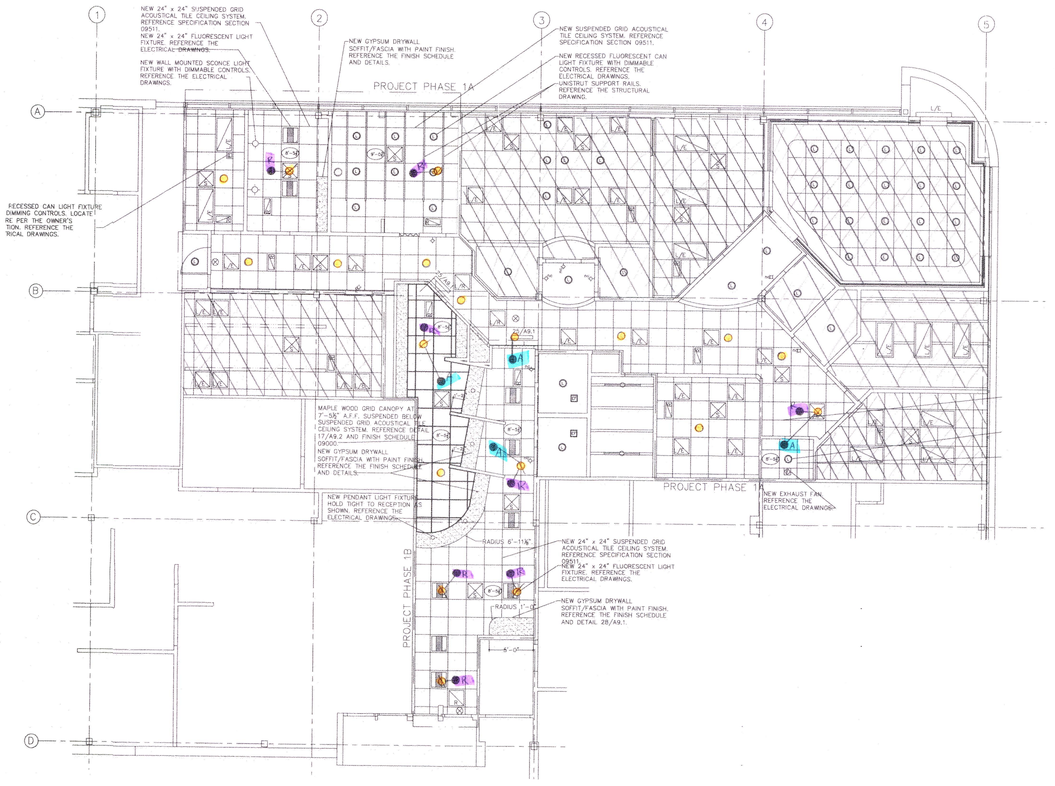

TENANT FINISH NOTES:

1. SYSTEM DESIGN – TENANT FINISH, PER NFPA 13, 2010. SUPPLY FROM EXISTING WET PIPE SYSTEM. NEW OCCUPANCY IS OFFICE (LIGHT HAZARD) UNLESS NOTED OTHERWISE.
2. BUILDING CONSTRUCTION IS NON–COMBUSTIBLE
3. ALL MATERIALS, DEVICES, AND HANGERS INSTALLED UNDER THIS CONTRACT SHALL BE UL LISTED AND/OR FACTORY MUTUAL APPROVED AND INSTALLED IN ACCORDANCE WITH THEIR LISTINGS AND APPLICABLE NFPA STANDARDS.
4. ANY AND ALL ELECTRICAL AND/OR ALARM WIRING, CONNECTIONS, AND TERMINATION SHALL BE BY OTHERS.
5. PIPE NOTE:
   - ALL PIPING SHALL BE IN ACCORDANCE WITH NFPA 13 (2010).
   - UNLESS SPECIFICALLY NOTED OTHERWISE ALL THREADED PIPE SHALL BE BLACK STEEL SHC 40 ASTM A135/A795 OR EQUAL.
   - ALL SCREWED FITTINGS SHALL BE CAST IRON AND MEET ANSI B.16.4 REQUIREMENTS.
   - ALL METHODS OF JOINING PIPE SHALL BE IN ACCORDANCE WITH NFPA 13 (2010).
6. SEE THE FIRE PROTECTION EQUIPMENT DATA FOR ALL APPLICABLE MATERIALS AND EQUIPMENT INSTALLED UNDER THIS CONTRACT.
7. PIPE DIMENSIONS SHOWN ARE CENTER TO CENTER.
8. SPRINKLER HEADS ARE NOT REQUIRED TO BE CENTERED IN CEILING GRID.
9. EXISTING SPRINKLERS THAT ARE NOT IN VIOLATION OF CODE SHALL REMAIN IN PLACE EVEN THOUGH THEY MAY NOT LINE UP WITH OTHER SPRINKLER IN THE AREA
10. RELOCATE ANY EXISTING SPRINKLER THAT IS LESS THAN 6" AWAY FROM CEILING GRID EVEN IF NOT SHOWN AS A RELOCATE ON THE PLAN
11. EXISTING SPRINKLER PIPE IS SHOWN FOR REFERENCE ONLY AND IS NOT PART OF THIS CONTRACT.
12. IN ROOMS OF 800 sq ft OR LESS HEADS MAY BE UP TO 9'–0" FROM ONE WALL.
13. HYDRAULIC CALCULATIONS HAVE NOT BEEN PERFORMED FOR THIS DESIGN. SPRINKLER HEADS ARE SUFFICIENTLY DISPERSED THROUGHOUT THE SPACE AS TO HAVE NO EFFECT ON THE SYSTEM DESIGN. NO OUTLET SHALL SUPPLY MORE THAN 2 SPRINKLER HEADS.

ABC Fire Protection Inc.
1660 Chambers Road
Aurora, Colorado 80011
720-262-4530 CELL
720-262-4531 FAX
COLORADO STATE REGISTRATION NUMBER: 14-219

Our priority is your protection.

ABC FIRE PROTECTION

INVISION SALLY JOBE
PHASE 1A &1B
1400 SOUTH POTOMAC #180
AURORA, CO 80012

FP-1 SHEET

APPROVED
City of Aurora Building Division
By [illegible]
2007 NFPA 13
Permit # 2014-834414-CT
RSN 886786

KEVIN P. MURRAY
NICET LEVEL IV # 084223

North

TENANT FINISH SPRINKLER LAYOUT

SCALE: 1/8" = 1'-0"

SYMBOL	QTY	MANUFACTURER	SIN No.	FINISH	ORIFICE	K-FAC	TEMP	ESCUTCHEON	ADD/RELOC
○		EXISTING PENDENT SPRK S.R.		CHROME	½"	5.6	155°	2 PIECE	—
● R	8	RELOCATE EXISTING PENDENT S.R.		CHROME	½"	5.6	165	2 PIECE	RELOCATE
● A	4	ADD NEW PENDENT S.R.	TY3211	CHROME	½	5.6	165	2 PIECE	ADD

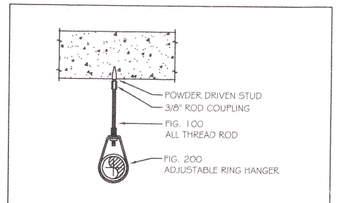

PDS ANCHOR, ROD COUPLING, ROD AND RING

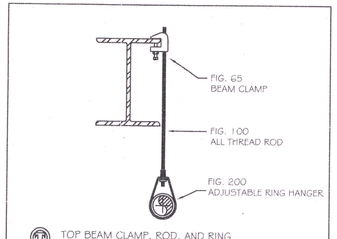

TOP BEAM CLAMP, ROD, AND RING

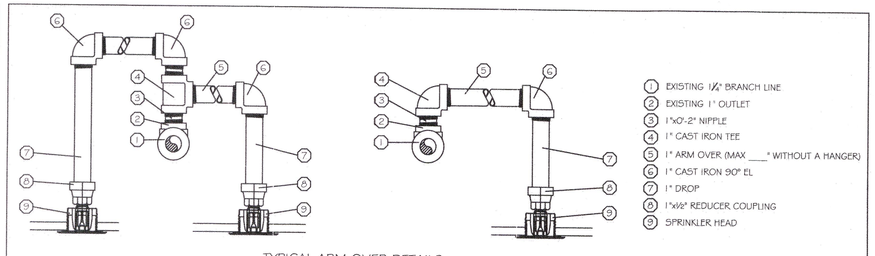

TYPICAL ARM OVER DETAILS

RSN: 886786
Permit #: 2014-834414-CT

tyco

Worldwide Contacts | www.tyco-fire.com

Series TY-L — 5.6 and 8.0 K-factor Upright, Pendent, and Recessed Pendent Sprinklers Standard Response, Standard Coverage

General Description

The TYCO Series TY-L, 5.6 and 8.0 K-factor, Upright and Pendent Sprinklers described in this data sheet are standard response -standard coverage, solder type spray sprinklers designed for use in light, ordinary, and extra hazard, commercial occupancies such as banks, hotels, shopping malls, factories, refineries, chemical plants, etc.

The recessed version of the Series TY-L Pendent Sprinkler, where applicable, is intended for use in areas with a finished ceiling. It uses a two-piece Style 20 (1/2 inch NPT) or Style 30 (3/4 inch NPT) Recessed Escutcheon. The Recessed Escutcheon provides 1/4 inch (6,4 mm) of recessed adjustment or up to 1/2 inch (12,7 mm) of total adjustment from the flush pendent position. The adjustment provided by the Recessed Escutcheon reduces the accuracy to which the fixed pipe drops to the sprinklers must be cut.

Corrosion resistant coatings, where applicable, are utilized to extend the life of copper alloy sprinklers beyond that which would otherwise be obtained when exposed to corrosive atmospheres. Although corrosion resistant coated sprinklers have passed the standard corrosion tests of the applicable approval agencies, the testing is not representative of all possible corrosive atmospheres. Consequently, it is recommended that the end user be consulted with respect to the suitability of these coatings for any given corrosive environment. The effects of ambient temperature, concentration of chemicals, and gas/chemical velocity, should be considered, as a minimum, along with the corrosive nature of the chemical to which the sprinklers will be exposed.

An intermediate level version of the Series TY-L Pendent Sprinkler can be obtained by utilizing the Series TY-L Pendent Sprinkler in combination with the Model S Shield.

IMPORTANT

Always refer to Technical Data Sheet TFP700 for the "INSTALLER WARNING" that provides cautions with respect to handling and installation of sprinkler systems and components. Improper handling and installation can permanently damage a sprinkler system or its components and cause the sprinkler to fail to operate in a fire situation or cause it to operate prematurely.

NOTICE

The TYCO Series TY-L, 5.6 and 8.0 K-factor, Upright and Pendent Sprinklers described herein must be installed and maintained in compliance with this document, as well as with the applicable standards of the National Fire Protection Association, in addition to the standards of any other authorities having jurisdiction. Failure to do so may impair the performance of these devices.

The owner is responsible for maintaining their fire protection system and devices in proper operating condition. The installing contractor or sprinkler manufacturer should be contacted with any questions.

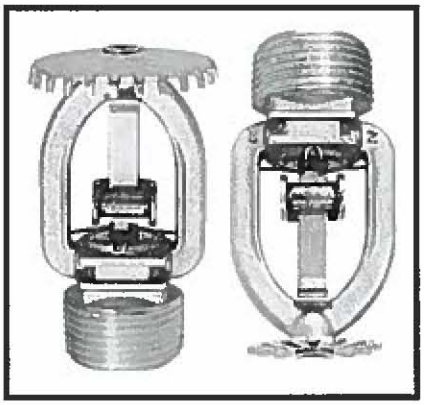



Sprinkler Identification Number

TY3111. . . . . .Upright 5.6K, 1/2" NPT
TY3211 . . . . .Pendent 5.6K, 1/2" NPT
TY4111. . . . . Upright 8.0K, 3/4" NPT
TY4211. . . . .Pendent 8.0K, 3/4" NPT
TY4811 . . . . .Upright 8.0K, 1/2" NPT
TY4911 . . . .Pendent 8.0K, 1/2" NPT

TY3111 is a re-designation for S1800 and G3111.
TY3211 is a re-designation for S1801 and G3112.
TY4111 is a re-designation for S1810 and G3101.
TY4211 is a re-designation for S1811 and G3102.
TY4811 is a re-designation for S1805.
TY4911 is a re-designation for S1806.

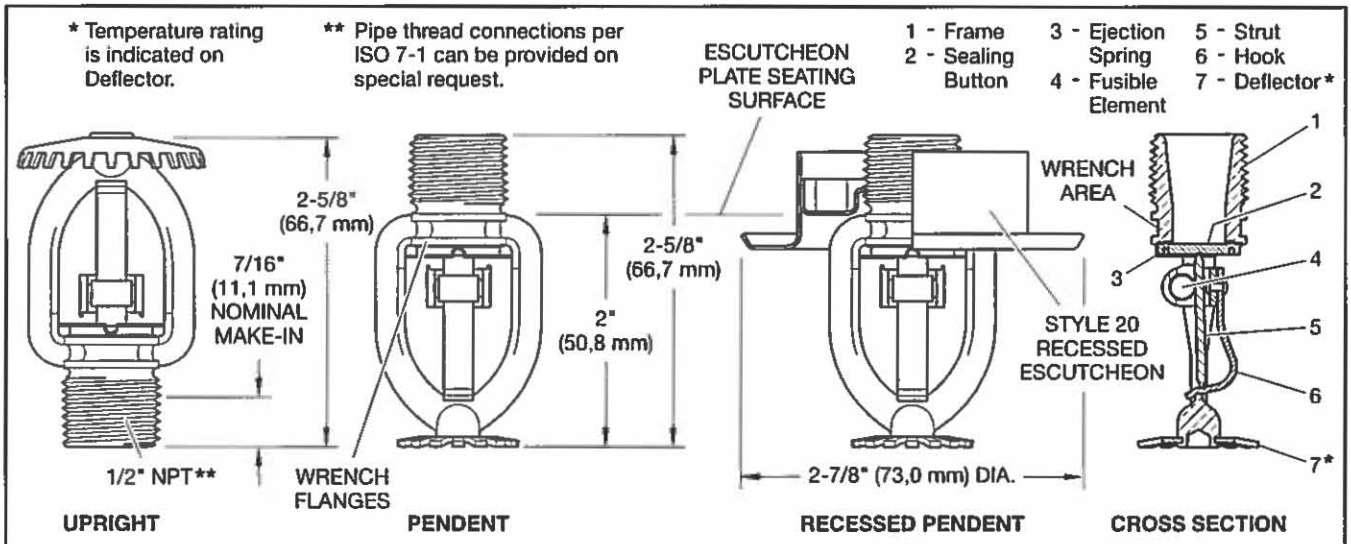

FIGURE 1
STANDARD RESPONSE SERIES TY-L UPRIGHT (TY3111) AND PENDENT (TY3211) SPRINKLERS
5.6 K-FACTOR, 1/2 INCH NPT

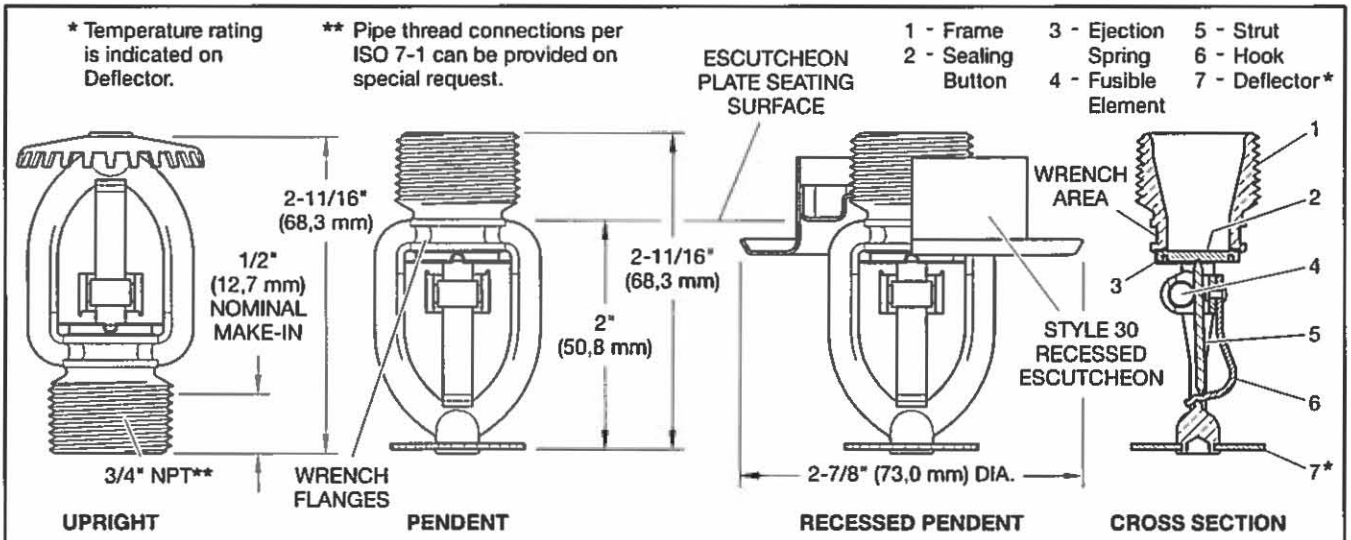

FIGURE 2
STANDARD RESPONSE SERIES TY-L UPRIGHT (TY4111) AND PENDENT (TY4211) SPRINKLERS
8.0 K-FACTOR, 3/4 INCH NPT

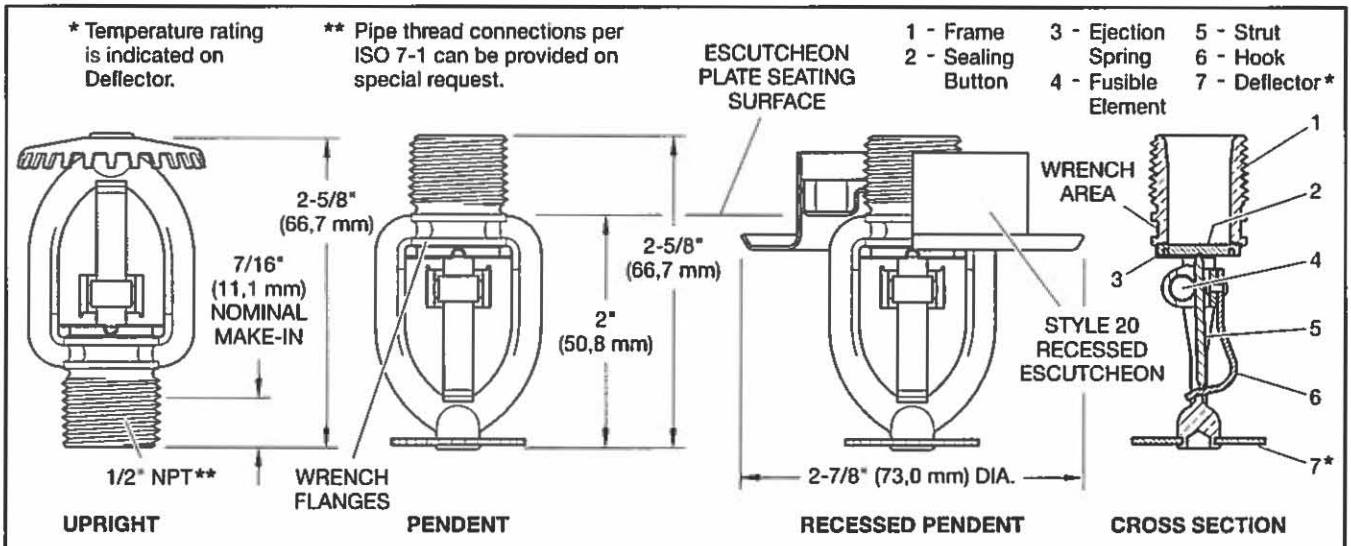

FIGURE 3
STANDARD RESPONSE SERIES TY-L UPRIGHT (TY4811) AND PENDENT (TY4911) SPRINKLERS 8.0 K-FACTOR, 1/2 INCH NPT

Technical Data

Approvals

UL and C-UL Listed. FM, and LPCB Approved. (Refer to Table A for complete approval information including corrosion resistant status.)

Maximum Working Pressure
175 psi (12,1 bar)

Discharge Coefficient
K=5.6 GPM/psi$^{1/2}$ (80,6 LPM/bar$^{1/2}$
K=8.0 GPM/psi$^{1/2}$ (115,2 LPM/bar$^{1/2}$)

Temperature Ratings
Refer to Table A

Finishes
Sprinkler: Refer to Table A Recessed Escutcheon: White Coated, Chrome Plated, or Brass Plated

Physical Characteristics

Frame	Brass
Sealing Button	Bronze w/TEFLON
Ejection Spring	Stainless Steel
Fusible Element	Solder, Copper, Stainless Steel
Strut	Monel
Hook	Bronze/Monel
Deflector	Bronze

Operation

A copper tube sealed by two stainless steel balls holds a fusible alloy. When the rated temperature is reached, the alloy melts, the balls are forced toward each other releasing the tension mechanism, allowing the sprinkler to operate.

Design Criteria

The TYCO Series TY-L, 5.6 and 8.0 K-factor, Upright and Pendent Sprinklers are intended for fire protection systems designed in accordance with the standard installation rules recognized by the applicable Listing or Approval agency (e.g., UL Listing is based on the requirements of NFPA 13, and FM Approval is based on the requirements of FM's Loss Prevention Data Sheets). Only the Style 20 or 30 Recessed Escutcheon, as applicable, are to be used for recessed pendent installations.

Installation

The TYCO Series TY-L, 5.6 and 8.0 K-factor, Upright and Pendent Sprinklers must be installed in accordance with this section:

A leak tight 1/2 inch NPT sprinkler joint should be obtained with a torque of 7 to 14 ft.-lbs. (9,5 to 19,0 Nm). A leak tight 3/4 inch NPT sprinkler joint should be obtained with a torque of 10 to 20 ft.-lbs. (13,4 to 26,8 Nm). Higher levels of torque may distort the sprinkler inlet and cause leakage or impairment of the sprinkler.

Do not attempt to make-up for insufficient adjustment in the escutcheon plate by under- or over-tightening the sprinkler. Readjust the position of the sprinkler fitting to suit.

Series TY-L Pendent and Upright Sprinkler Installation
The Series TY-L Pendent and Upright Sprinklers must be installed in accordance with this section.

Step 1. Pendent sprinklers are to be installed in the pendent position, and

Step 2. With pipe thread sealant applied to the pipe threads, hand tighten the sprinkler into the sprinkler fitting.

Step 3. Tighten the sprinkler into the sprinkler fitting using only the W-Type 9 Sprinkler Wrench (Ref. Figure 7), except that an 8 or 10 inch adjustable Crescent wrench is to be used for wax coated sprinklers. With reference to Figures 1, 2, and 3, the W-Type 9 Sprinkler Wrench is to be applied to the wrench area, or as applicable, the adjustable Crescent wrench is to be applied to the wrenching flanges.

When installing wax coated sprinklers with the adjustable Crescent wrench, additional care needs to be exercised to prevent damage to the wax coating on the sprinkler wrench flats or frame arms and, consequently, exposure of bare metal to the corrosive environment. The jaws of the wrench should be opened sufficiently wide to pass over the wrench flats without damaging the wax coating. Before wrench tightening the sprinkler, the jaws of the wrench are to be adjusted to just contact the sprinkler wrench flats. After wrench tightening the sprinkler, loosen the wrench jaws before removing the wrench.

After installation, the sprinkler wrench flats and frame arms must be inspected and the wax coating retouched (repaired) whenever the coating has been

K	Type	Temp. Rating	Frame Color Code	Sprinkler Finish				
				Natural Brass	Chrome Plated	Lead Coated	Wax Coated	Wax Over Lead Coated
5.6 1/2" NPT	Pendent (TY3211) and Upright (TY3111)	165°F (74°C)	Unpainted	1, 2, 3, 5		1, 2, 3		
		212°F (100°C)	White					
		280°F (138°C)	Blue			1, 2	4	N/A
	Recessed Pendent (TY3211 w/Style 20)	165°F (74°C)	Unpainted	1, 2, 3, 5		N/A		
		212°F (100°C)	White	1, 2, 3, 5				
8.0 3/4" NPT	Pendent (TY4211)	165°F (74°C)	Unpainted	1, 2, 3		1, 2, 3		
		212°F (100°C)	White					
		280°F (138°C)	Blue			1, 2	4	N/A
	Upright (TY4111)	165°F (74°C)	Unpainted	1, 2, 3, 5		1, 2, 3		
		212°F (100°C)	White					
		280°F (138°C)	Blue			1, 2	4	N/A
	Recessed Pendent (TY4211 w/Style 30)	165°F (74°C)	Unpainted	1, 2, 5		N/A		
		212°F (100°C)	White					
8.0 1/2" NPT	Pendent (TY4911) and Upright (TY4811)	165°F (74°C)	Unpainted	1, 2, 3, 5		1, 2, 3		
		212°F (100°C)	White					
		280°F (138°C)	Blue			1, 2	N/A	
	Recessed Pendent (TY4911 w/Style 20)	165°F (74°C)	Unpainted	1, 2		N/A		
		212°F (100°C)	White					

NOTES:
1. Listed by Underwriters Laboratories, Inc. (UL).
2. Listed by Underwriters Laboratories, Inc. for use in Canada (C-UL).
3. Approved by Factory Mutual Research Corporation (FM).
4. Approved by Factory Mutual Research Corporation (FM) for maximum 150°F (68°C) ambient temperatures.
5. Approved by the Loss Prevention Certification Board (LPCB Ref. No. 094a/03). N/A: Not Available

TABLE A
LABORATORY LISTINGS AND APPROVALS

damaged and bare metal is exposed. The wax coating on the wrench flats can be retouched by gently applying a heated 1/8 inch diameter steel rod to the areas of wax that have been damaged, to smooth it back over areas where bare metal is exposed.

NOTE

Only retouching of the wax coating applied to the wrench flats and frame arms is permitted, and the retouching is to be performed only at the time of the initial sprinkler installation.

The steel rod should be heated only to the point at which it can begin to melt the wax, and appropriate precautions need to be taken, when handling the heated rod, in order to prevent the installer from being burned.

If attempts to retouch the wax coating with complete coverage are unsuccessful, additional wax can be ordered in the form of a wax stick (the end of which is color coded). Only the correct color coded wax is to be used, and retouching of wrench flats and frame arms is only permitted at the time of initial sprinkler installation. With the steel rod heated as previously described, touch the rod to the area requiring additional wax with the rod angled downward, and then touch the wax stick to the rod approximately one-half inch away from the area requiring retouching. The wax will melt and run down onto the sprinkler.

Series TY-L Recessed Pendent Sprinklers Installation

The Series TY-L Recessed Pendent Sprinklers must be installed in accordance with this section.

Step A. After installing the Style 20 or 30 Mounting Plate, as applicable, over the sprinkler threads and with pipe thread sealant applied to the pipe threads, hand tighten the sprinkler into the sprinkler fitting.

Step B. Tighten the sprinkler into the sprinkler fitting using only the W-Type 10 Recessed Sprinkler Wrench (Ref. Figure 8). With reference to Figure 1, 2, or 3, the W-Type 10 Recessed Sprinkler Wrench is to be applied to the sprinkler wrenching flanges.

Step C. After the ceiling has been installed or the finish coat has been applied, slide on the Style 20 or 30 Closure over the Series TY-L Sprinkler and push the Closure over the Mounting Plate until its flange comes in contact with the ceiling.

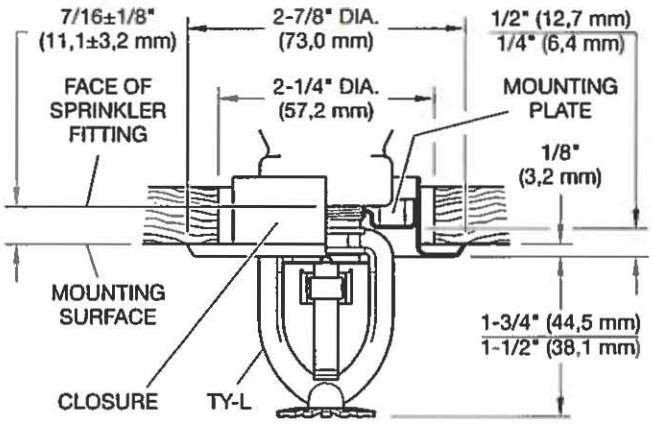

FIGURE 4
SERIES TY-L (TY3211) RECESSED PENDENT SPRINKLER ASSEMBLY WITH TWO-PIECE 1/2 INCH TOTAL ADJUSTMENT STYLE 20 RECESSED ESCUTCHEON 5.6 K-FACTOR, 1/2 INCH NPT

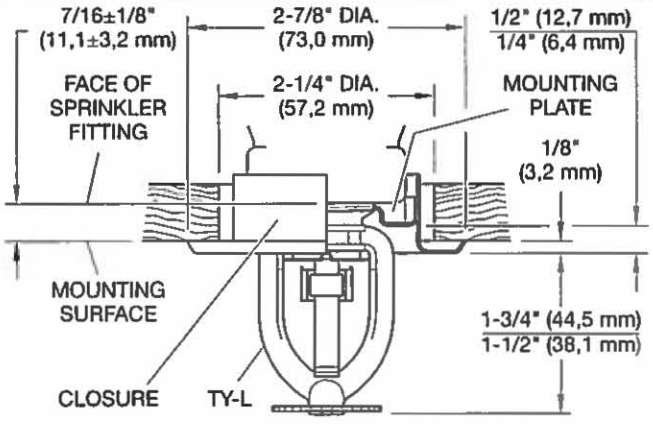

FIGURE 5
SERIES TY-L (TY4211) RECESSED PENDENT SPRINKLER ASSEMBLY WITH TWO-PIECE 1/2 INCH TOTAL ADJUSTMENT STYLE 30 RECESSED ESCUTCHEON 8.0 K-FACTOR, 3/4 INCH NPT

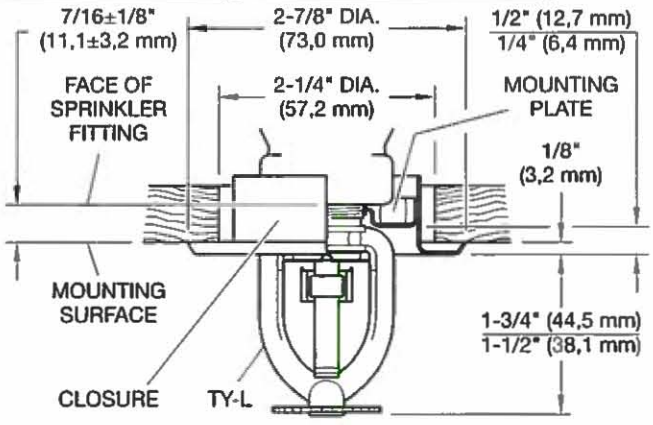

FIGURE 6
SERIES TY-L (TY4911) RECESSED PENDENT SPRINKLER ASSEMBLY WITH TWO-PIECE 1/2 INCH TOTAL ADJUSTMENT STYLE 20 RECESSED ESCUTCHEON 8.0 K-FACTOR, 1/2 INCH NPT

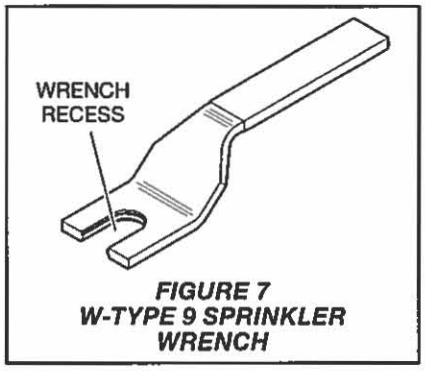

FIGURE 7
W-TYPE 9 SPRINKLER WRENCH

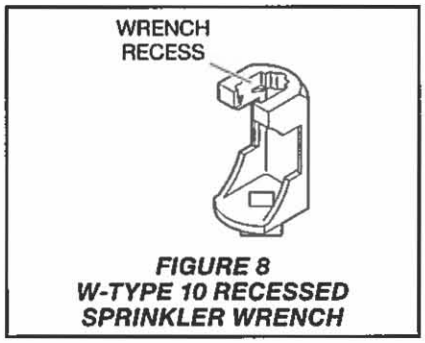

FIGURE 8
W-TYPE 10 RECESSED SPRINKLER WRENCH

Care and Maintenance

The TYCO Series TY-L, 5.6 and 8.0 K-factor, Upright and Pendent Sprinklers must be maintained and serviced in accordance with this section:

Before closing a fire protection system main control valve for maintenance work on the fire protection system that it controls, permission to shut down the affected fire protection system must be obtained from the proper authorities and all personnel who may be affected by this action must be notified.

Absence of an escutcheon, which is used to cover a clearance hole, may delay the time to sprinkler operation in a fire situation.

Sprinklers that are found to be leaking or exhibiting visible signs of corrosion must be replaced.

Automatic sprinklers must never be painted, plated, coated or otherwise altered after leaving the factory. Modified or over-heated sprinklers must be replaced. Care must be exercised to avoid damage to the sprinklers -before, during, and after installation. Sprinklers damaged by dropping, striking, wrench twist/slippage, or the like, must be replaced.

Frequent visual inspections are recommended to be initially performed for corrosion resistant coated sprinklers, after the installation has been

P/N 53 - XXX - X - XXX

		S/N
111	5.6K UPRIGHT (1/2"NPT)	TY3111
112	5.6K PENDENT (1/2"NPT)	TY3211
101	8.0K UPRIGHT (3/4"NPT)	TY4111
102	8.0K PENDENT (3/4"NPT)	TY4211
106	8.0K UPRIGHT (1/2"NPT)	TY4811
107	8.0K PENDENT (1/2"NPT)	TY4911

	Sprinkler
1	Natural Brass
9	Chrome Plated
7	Lead Coated
6	Wax Coated 165°F to 280°F Only
8	Wax Coated 165°F to 212°F Only

	TEMPERATURE RATING
165	165°F (74°C)
212	212°F (100°C)
280	280°F (138°C)

TABLE B
SERIES TY-L PENDENT AND UPRIGHT SPRINKLERS
PART NUMBER SELECTION

completed, to verify the integrity of the corrosion resistant coating. Thereafter, annual inspections per NFPA 25 should suffice; however, instead of inspecting from the floor level, a random sampling of close-up visual inspections should be made, so as to better determine the exact sprinkler condition and the long term integrity of the corrosion resistant coating, as it may be affected by the corrosive conditions present.

The owner is responsible for the inspection, testing, and maintenance of their fire protection system and devices in compliance with this document, as well as with the applicable standards of the National Fire Protection Association (e.g., NFPA 25), in addition to the standards of any other authorities having jurisdiction. The installing contractor or sprinkler manufacturer should be contacted relative to any questions.

It is recommended that automatic sprinkler systems be inspected, tested, and maintained by a qualified Inspection Service in accordance with local requirements and/or national codes.

Ordering Procedure

Contact your local distributor for availability. When placing an order, indicate the full product name and Part Number (P/N).

Sprinkler Assemblies with NPT Thread Connections:

Specify: Series TY-L (specify SIN), (specify K-factor), specify Upright, Pendent, or Recessed Pendent) Sprinkler, Standard Response, Standard Coverage, (specify) temperature rating, (specify) finish or coating, P/N (specify from Table B)

Recessed Escutcheon:

Specify: Style (specify) Recessed Escutcheon with (specify finish), P/N

1/2" (15 mm)
Style 20
Brass Plated. . . . . P/N 56-705-2-010
1/2" (15 mm)
Style 20
Signal White (RAL 9003)
. . . . . P/N 56-705-4-010
1/2" (15 mm)
Style 20
Chrome Plated . . . . . P/N 56-705-9-010
3/4" (20 mm)
Style 30
Brass Plated. . . . . P/N 56-705-2-011
3/4" (20 mm)
Style 30
Signal White (RAL 9003)
. . . . . P/N 56-705-4-011
3/4" (20 mm)
Style 30
Chrome Plated . . . . . P/N 56-705-9-011

Sprinkler Wrench:

Specify: W-Type 9 Sprinkler Wrench, P/N 56-000-1-849.

Specify: W-Type 10 Sprinkler Wrench, P/N 56-000-1-948.

Wax Sticks: (for retouching wrench damaged wax coating)

Specify: Series TY-L Sprinklers, (specify color), color coded Wax Stick for retouching, (specify) temperature rated, P/N (specify).

Red for 165°F (74°C) . . P/N 56-065-1-155
Blue for 212°F (100°C) and 280°F (138°C)
. . . . . P/N 56-065-1-286

NOTE: *Each wax stick is suitable for retouching up to twenty-five sprinklers.*

The wax used for 280°F (138°C) sprinklers is the same as for 212°F (100°C) sprinklers, and, therefore, the 280°F (138°C) sprinkler is limited to the same maximum ceiling temperature as the 212°F (100°C) sprinkler (i.e., 150°F (65°C)).

Copyright © 2013 Tyco Fire Products, LP. All rights reserved.
TEFLON is trademark of The DuPont Corporation.

RSN: *886786*
Permit #: *2014-834414-CT*

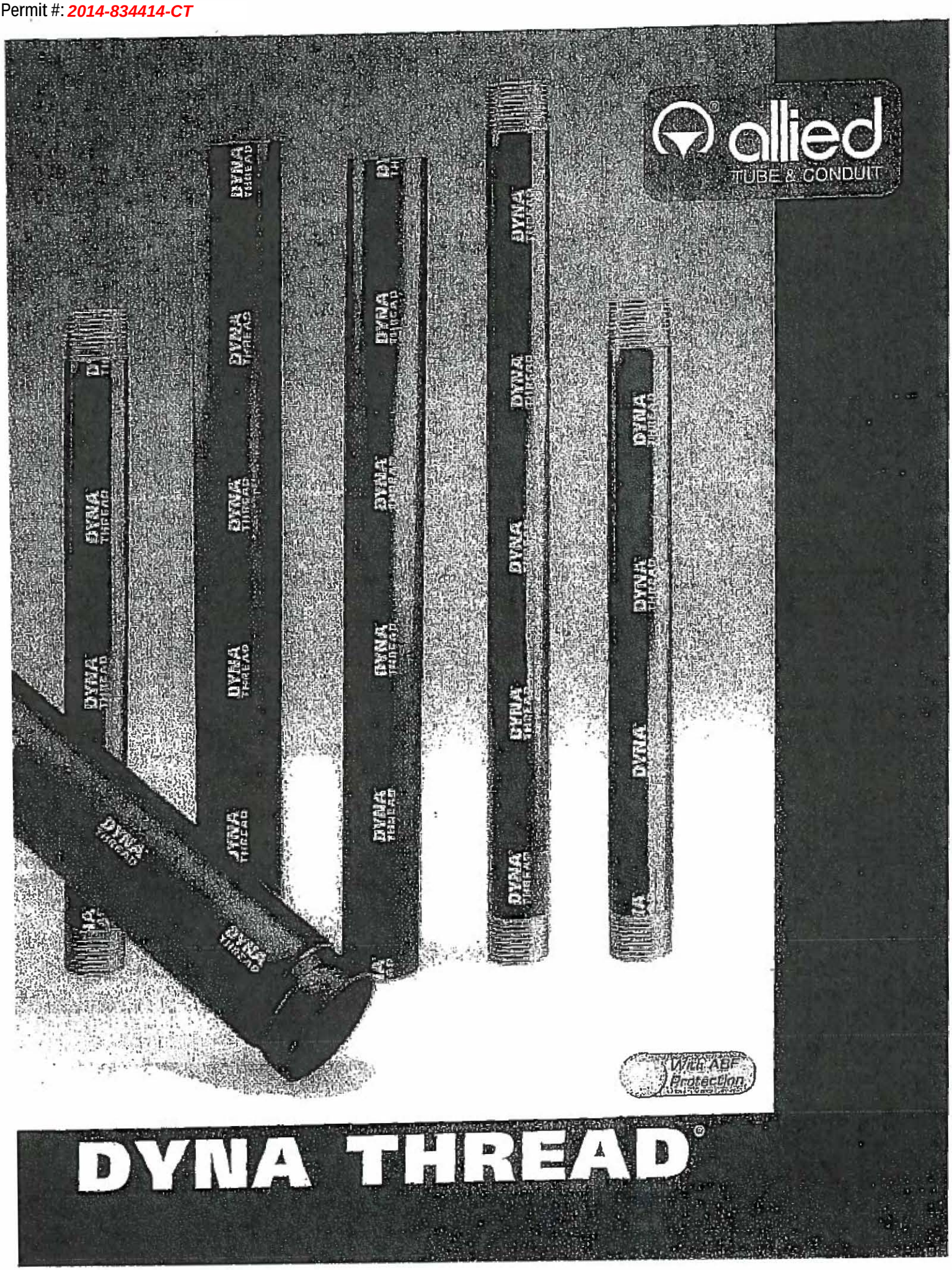

RSN: 886786
Permit #: 2014-834414-CT

Dyna-Thread®

Full Line Sch-40 Replacement

Dyna-Thread® offers the life expectancy of Sch-40 with superior hydraulics and greater value.

Dyna-Thread sprinkler pipe represents an engineering advancement for the sprinkler pipe industry. It combines the safety and longevity of traditional Sch-40 pipe with quality and superior hydraulic advantages.

Comparison to Schedule 40

- Dyna-Thread's inside diameter is up to 3.6% larger than Sch-40 giving it superior hydraulics. And, when used in combination with Dyna-Flow pipe, down sizing often occurs.
- Dyna-Thread is fully listed and approved by UL, ULC, and FM for fire sprinkler applications.
- The life expectancy of Dyna-Thread and Sch-40 are equal based on the calculated wall thicknesses per UL.
- The consistent quality of steel used to make Dyna-Thread facilitates smooth threading and lower maintenance costs.
- The exterior of Dyna-Thread is protected by a clean, durable mill coating for extended shelf life and easy paint application.
- With its increased strength and lighter weight, Dyna-Thread reduces installation fatigue and is ideal for retro-fit applications.

Corrosion Resistance Ratio (CRR) is a UL (Underwriters Laboratory) term for the estimated life expectancy of a pipe joint. This is based on the calculated wall thickness at the base of the first exposed thread, assumed to be the weakest point of the pipe length. Dyna-Thread and Sch-40 have the same calculated wall thicknesses at this point and are both assigned the same CRR of 1.00.

The internal surface of all black Allied Tube & Conduit Fire Sprinkler pipe products up to 4.5000" in diameter is coated with our new Antibacterial Formula, "ABF". In scientific laboratory test, ABS proved to have superior resistance to microbial colonization of pipe walls, thereby delaying or possibly preventing the onset of Microbiologically Influenced corrosion (MIC) when the First Sprinkler System is first installed.

UL Listed FM Approved ULC Listed

Comparison to L.W.T. Pipes

- More wall thickness at the thread (CRR=1.00) gives Dyna-Thread better life expectancy than lightwall threadable pipe joints.
- Unlike lightwall threadable pipe, Dyna-Thread has no thread gauge warning.
- Dyna-Thread is approved for standard hanger spacing (15 ft. O.C.), can be used as earthquake sway bracing, and is safe to use as drops.
- Dyna-Thread is safer to weld on.
- Dyna-Thread is more widely accepted than lightwall threadable where Sch-40 is specified.

Specifications & Approvals

Super 40/Dyna-Thread pipe is manufactured to meet: ASTM A-135, Grade A and is in compliance with NFPA-13. All sizes of Super 40/Dyna-Thread are rated at 300 psi working pressure. Super 40/Dyna-Thread is UL and ULC Listed for wet, dry deluge and pre-action sprinkler systems and FM Approved for use in wet systems. Super 40/Dyna-Thread can be "hot-dip" galvanized to meet FM requirement for dry systems. Super 40/Dyna-Thread is approved for all threaded couplings and welded outlets and is suitable for all roll-grooved, and plain-end fittings. (See listing information).

Specifications

NPS In; mm	Nominal I.D. In; mm	Wt. Lbs/Ft; Kg/m	Wt. (H2O Filled) Lbs/Ft; Kg/m	Pcs/ Lift	Wt/Lift (21') Lbs; Kg	Wt/Lift (24') Lbs; Kg	Wt/Lift (25') Lbs, Kg
1"	1.080	1.330	1.75	70	1955	2234	2327
25	*27.4*	*2.0*	*2.60*	*70*	*887*	*1013*	*1056*
1¼"	1.408	1.870	2.54	51	2002	2288	2384
32	*35.8*	*2.8*	*3.78*	*51*	*908*	*1038*	*1081*
1½"	1.639	2.290	3.22	44	2115	2418	2519
40	*41.6*	*3.4*	*4.79*	*44*	*959*	*1097*	*1143*
2"	2.104	3.050	4.57	30	1921	2196	2287
50	*53.4*	*4.5*	*6.80*	*30*	*871*	*996*	*1037*

tyco / Flow Control
allied TUBE & CONDUIT
16100 S. Lathrop • Harvey, IL 60426
11350 Norcom Rd. • Philadelphia, PA 19154
2525 N. 27 th Ave. • Phoenix. AZ 85009
Customer Service:
(800) 882-5543
Fax 708-339-1806

RSN: 886786
Permit #: 2014-834414-CT

D.I. THREADED FITTINGS

S.P. FITTINGS
A Division of Star Pipe Products

LISTED LISTED APPROVED
For fire protection services request submittal GRS 1.3

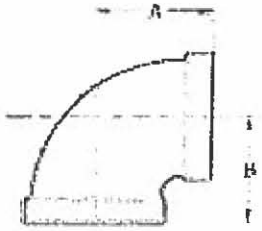

DUCTILE IRON THREADED FITTINGS ARE UL, ULC LISTED AND FACTORY MUTUAL APPROVED FOR 500 PSI SERVICE. DUCTILE IRON PER ASTM A 536 GRADE 65-45-12. DIMENSIONS CONFORM TO ANSI B16.3 CLASS 150. THREADS ARE NPT PER ANSI/ASME B1.20.1

NOTICE: DUCTILE IRON FITTINGS HAVE HIGHER TENSILE STRENGTH THEN THAT OF STEEL PIPE. THEREFORE, OVER TIGHTENING CAN CAUSE DAMAGE TO PIPE THREADS WHICH MAY CAUSE LEAKAGE. DUCTILE IRON FITTINGS SHOULD BE TIGHTENED THREE TURNS BEYOND HAND TIGHT, BUT NO MORE THAN FOUR TURNS.

DUCTILE IRON 90 DEG. ELBOW

NOMINAL SIZE (INCH)	ITEM CODE #	MAX. WORKING P.S.I.	DIMENSIONS A	DIMENSIONS B	WEIGHT EACH PIECE
1	DB90033	500	1.50	1.50	0.62
1 1/4	DB90044	500	1.75	1.75	0.90
1 1/2	DB90055	500	1.94	1.94	1.20
2	DB90066	500	2.25	2.25	1.85



DUCTILE IRON RED.90 DEG. ELBOW

NOMINAL SIZE (INCH)	ITEM CODE #	MAX. WORKING P.S.I.	DIMENSIONS A	DIMENSIONS B	WEIGHT EACH PIECE
1X1/2	DB90031	500	1.26	1.36	0.44
1X3/4	DB90032	500	1.37	1.45	0.52
1 1/4X1/2	DB90041	500	1.34	1.53	0.64
1 1/4X3/4	DB90042	500	1.45	1.62	0.72
1 1/4X1	DB90043	500	1.58	1.67	0.75
1 1/2X1	DB90053	500	1.65	1.80	0.92
1 1/2X1 1/4	DB90054	500	1.82	1.88	1.08
2X1/2	DB90061	500	1.49	1.88	1.08
2X3/4	DB90062	500	1.60	1.97	1.24
2X1	DB90063	500	1.73	2.02	1.40
2X1 1/4	DB90064	500	1.90	2.10	1.52
2X1 1/2	DB90065	500	2.02	2.16	1.65

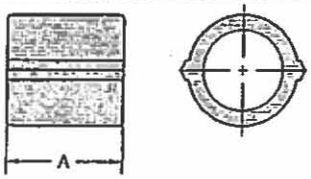

DUCTILE IRON COUPLING

NOMINAL SIZE (INCH)	ITEM CODE #	MAX. WORKING P.S.I.	DIMENSION A	WEIGHT EACH PIECE
1	DCL033	500	1.67	0.40
1 1/4	DCL044	500	1.93	0.57
1 1/2	DCL055	500	2.15	0.75
2	DCL066	500	2.53	1.15

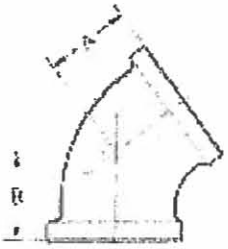

DUCTILE IRON 45 DEG. ELBOW

NOMINAL SIZE (INCH)	ITEM CODE #	MAX. WORKING P.S.I.	DIMENSIONS A	DIMENSIONS B	WEIGHT EACH PIECE
1	DB45033	500	1.12	1.12	0.46
1 1/4	DB45044	500	1.29	1.29	0.73
1 1/2	DB45055	500	1.43	1.43	0.92
2	DB45066	500	1.68	1.68	1.50

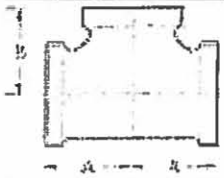

DUCTILE IRON STRAIGHT TEE

NOMINAL SIZE (INCH)	ITEM CODE #	MAX. WORKING P.S.I.	DIMENSIONS A	DIMENSIONS B	WEIGHT EACH PIECE
1	DT333	500	1.50	1.50	0.85
1 1/4	DT444	500	1.75	1.75	1.22
1 1/2	DT555	500	1.94	1.94	1.55
2	DT666	500	2.25	2.25	2.45



DUCTILE IRON RED. COUPLING

NOMINAL SIZE (INCH)	ITEM CODE #	MAX. WORKING P.S.I.	DIMENSION A	WEIGHT EACH PIECE
1X1/2	DRC031	500	1.69	0.39
1X3/4	DRC032	500	1.69	0.53

RSN: 886786
Permit #: 2014-834414-CT

D.I. THREADED FITTINGS

S.P. FITTINGS
A Division of Star Pipe Products

LISTED LISTED APPROVED
For fire protection services request submittal GRS 1.3

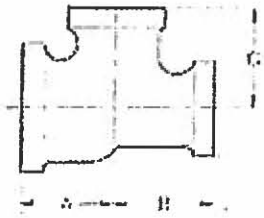

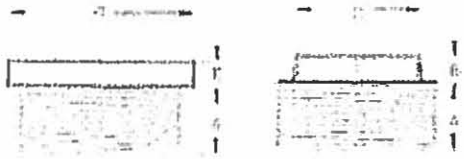

OUTSIDE HEAD INSIDE HEAD

DUCTILE IRON BUSHINGS

NOMINAL SIZE (INCH)	ITEM CODE #	DIMENSIONS A	B	C	STYLE	WT. EACH
1x1/2	DBUSH31	0.75	0.25	1.42	OUT	0.22
1x3/4	DBUSH32	0.75	0.25	1.42	OUT	0.17
1 1/4x1	DBUSH43	0.80	0.28	1.76	OUT	0.28
1 1/2x1	DBUSH53	0.83	0.31	2.00	OUT	0.44
1 1/2x1 1/4	DBUSH54	0.83	0.31	2.00	OUT	0.30
2x1	DBUSH63	0.88	0.41	1.95	IN	0.66
2x1 1/4	DBUSH64	0.88	0.34	2.48	OUT	0.72
2x1 1/2	DBUSH65	0.88	0.34	2.48	OUT	0.61

DUCTILE IRON REDUCING TEE

NOMINAL SIZE (INCH)	ITEM CODE #	MAX. WORKING P.S.I.	DIMENSIONS A	B	C	WEIGHT EACH PIECE
1X1X1/2	DT331	500	1.26	1.26	1.36	0.64
1X1X3/4	DT332	500	1.37	1.37	1.45	0.73
1X1/2X1	DT313	500	1.50	1.36	1.50	0.71
1X3/4X1	DT323	500	1.50	1.45	1.50	0.76
1X1X1 1/4	DT334	500	1.67	1.67	1.58	0.98
1X1X1 1/2	DT335	500	1.80	1.80	1.65	1.16
1 1/4X1X1/2	DT431	500	1.34	1.26	1.53	0.82
1 1/4X1X3/4	DT432	500	1.45	1.37	1.62	0.90
1 1/4X1X1	DT433	500	1.58	1.50	1.67	1.00
1 1/4X1X1 1/4	DT434	500	1.75	1.67	1.75	1.08
1 1/4X1X1 1/2	DT435	500	1.88	1.80	1.82	1.42
1 1/4X1 1/4X1/2	DT441	500	1.34	1.34	1.53	0.86
1 1/4X1 1/4X3/4	DT442	500	1.45	1.45	1.62	0.92
1 1/4X1 1/4X1	DT443	500	1.58	1.58	1.67	0.95
1 1/4X1 1/4X1 1/2	DT445	500	1.88	1.88	1.82	1.45
1 1/4X1 1/4X2	DT446	500	2.10	2.10	1.90	1.75
1 1/2X1X1/2	DT531	500	1.41	1.34	1.66	0.95
1 1/2X1X3/4	DT532	500	1.52	1.37	1.75	1.14
1 1/2X1X1	DT533	500	1.65	1.50	1.80	1.17
1 1/2X1X1 1/4	DT534	500	1.82	1.67	1.88	1.34
1 1/2X1X1 1/2	DT535	500	1.94	1.80	1.94	1.45
1 1/2X1 1/4X1/2	DT541	500	1.41	1.34	1.66	1.05
1 1/2X1 1/4X3/4	DT542	500	1.52	1.45	1.75	1.15
1 1/2X1 1/4X1	DT543	500	1.65	1.58	1.80	1.25
1 1/2X1 1/4X2	DT546	500	2.16	2.10	2.02	1.90
1 1/2X1 1/2X1/2	DT551	500	1.41	1.41	1.16	1.15
1 1/2X1 1/2X3/4	DT552	500	1.52	1.52	1.75	1.24
1 1/2X1 1/2X1	DT553	500	1.65	1.65	1.80	1.30
1 1/2X1 1/2X1 1/4	DT554	500	1.82	1.82	1.88	1.48
1 1/2X1 1/2X2	DT556	500	2.16	2.16	2.02	1.98
2X1X2	DT636	500	2.25	2.02	2.25	2.15
2X1 1/4X2	DT646	500	2.25	2.10	2.25	2.30
2X1 1/2X1/2	DT651	500	1.49	1.41	1.88	1.50
2X1 1/2X3/4	DT652	500	1.60	1.52	1.97	1.62
2X1 1/2X1	DT653	500	1.73	1.65	2.02	1.64
2X1 1/2X1 1/4	DT654	500	1.90	1.82	2.10	1.80
2X1 1/2X1 1/2	DT655	500	2.02	1.94	2.16	2.00
2X1 1/2X2	DT656	500	2.25	2.16	2.25	2.35
2X2X1/2	DT661	500	1.49	1.49	1.88	1.60
2X2X3/4	DT662	500	1.60	1.60	1.97	1.68
2X2X1	DT663	500	1.73	1.73	2.02	1.85
2X2X1 1/4	DT664	500	1.90	1.90	2.10	2.04
2X2X1 1/2	DT665	500	2.02	2.02	2.16	2.18
2X2X2 1/2	DT667	500	2.60	2.60	2.39	3.61
2 1/2X2X3/4	DT762	500	1.74	1.60	2.32	2.28



DUCTILE IRON CROSS

NOMINAL SIZE (INCH)	ITEM CODE #	MAX. WORKING P.S.I	DIMENSIONS A	B	WEIGHT EACH PIECE
1	DX033	500	1.50	1.50	0.98
1 1/4	DX044	500	1.75	1.75	1.50
1 1/2	DX055	500	1.94	1.94	1.90
2	DX066	500	2.25	2.25	2.95
1 1/4X1	DX043	500	1.58	1.67	1.27
1 1/2X1	DX053	500	1.65	1.80	1.48
2X1	DX063	500	1.73	2.02	2.10



DUCTILE IRON CAP

NOMINAL SIZE (INCH)	ITEM CODE #	MAX. WORKING P.S.I.	DIMENSION A	WEIGHT EACH PIECE
1	DCP003	500	1.16	0.32
1 1/4	DCP004	500	1.28	0.43
1 1/2	DCP005	500	1.33	0.60
2	DCP006	500	1.45	0.91

RSN: 886786
Permit #: 2014-834414-CT

FireLock® Outlet-T

STYLE 922

SEE VICTAULIC PUBLICATION 10.01 FOR DETAILS

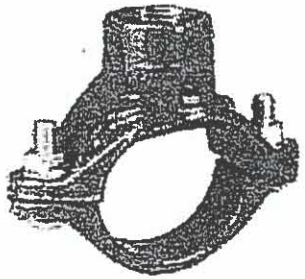

The Style 922 Outlet-T provides a convenient method of incorporating ½, ¾, and 1"/15, 20 and 25 mm outlets for directly connecting sprinklers, drop nipples, sprigs, gauges, drains and other outlet products. Available for 1¼ through 76.1 mm/32 to 76.1 mm piping systems, Style 922 outlets are UL/ULC Listed, LPCB and FM Approved for branch connections and VdS Approved for direct sprinkler connection only on wet and dry systems.

The locating collar engages into the hole prepared in the pipe. When tightened, the assembly compresses the gasket onto the OD of the pipe. The Style 922 Outlet-T is UL/FM rated up to 300 psi/2068 kPa and VdS rated up to 16 bar at the ambient temperatures typical for fire protection systems.

Style 922 is suitable for use on standard, lightwall, Schedule 5 and other specialty pipes.* Contact Victaulic for other optional coatings.

*Consult Section 10.01 for specific listings/approvals.

MATERIAL SPECIFICATIONS

Housing: Ductile iron conforming to ASTM A-536, grade 65-45-12. Ductile iron conforming to ASTM A-395, grade 65-45-15, is available upon special request.

Gasket:

- **Grade "E" EPDM - Type A**
  (Violet color code). FireLock products have been Listed by Underwriters Laboratories Inc. and Approved by Factory Mutual Research for wet and dry (oil free air) sprinkler services up to the rated working pressure using the Grade "E" Type A Gasket System.

Bolts/Nuts: Heat-treated plated carbon steel, trackhead meeting the physical and chemical requirements of ASTM A-449 and physical requirements of ASTM A-183.

Housing Coating:

- Orange enamel (North America, Latin America, Asia Pacific)
- Red enamel (Europe)

RSN: *886786*
Permit #: *2014-834414-CT*

FireLock® Outlet-T

STYLE 922

DIMENSIONS

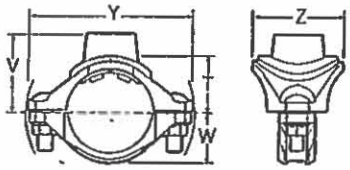

Nominal Size Inches/mm Run		Branch FPT†	Hole Diameter +0.06/+1.5 -0.00/-0.0	Dimensions – Inches/millimeters T*	V	W	Y	Z	Approx. Weight Each lbs/kg
1¼ 32	X	½ 15	1 3/16 30.2	1.30 33.0	1.83 46.5	1.10 27.9	3.87 98.3	2.56 65.0	1.0 0.45
		¾ 20	1 3/16 30.2	1.28 32.5	1.83 46.5	1.10 27.9	3.87 98.3	2.56 65.0	1.1 0.50
		1 25	1 3/16 30.2	1.52 38.6	2.18 55.4	1.10 27.9	3.87 98.3	2.56 65.0	1.2 0.54
1½ 40	X	½ 15	1 3/16 30.2	1.42 36.1	1.95 49.5	1.22 31.0	4.08 103.6	2.56 65.0	1.2 0.54
		¾ 20	1 3/16 30.2	1.40 35.6	1.95 49.5	1.22 31.0	4.08 103.6	2.56 65.0	1.2 0.54
		1 25	1 3/16 30.2	1.64 41.7	2.30 58.4	1.22 31.0	4.08 103.6	2.56 65.0	1.3 0.59
2 50	X	½ 15	1 3/16 30.2	1.66 42.2	2.19 55.6	1.46 37.1	4.60 116.8	2.56 65.0	1.3 0.59
		¾ 20	1 3/16 30.2	1.64 41.7	2.19 55.6	1.46 37.1	4.60 116.8	2.56 65.0	1.4 0.64
		1 25	1 3/16 30.2	1.88 47.8	2.54 64.5	1.46 37.1	4.60 116.8	2.56 65.0	1.5 0.68
2½ 65	X	½ 15	1 3/16 30.2	1.91 48.5	2.44 62.0	1.71 43.4	5.40 137.2	2.56 65.0	1.6 0.73
		¾ 20	1 3/16 30.2	1.89 48.0	2.44 62.0	1.71 43.4	5.40 137.2	2.56 65.0	1.6 0.73
		1 25	1 3/16 30.2	2.13 54.1	2.79 70.9	1.71 43.4	5.40 137.2	2.56 65.0	1.6 0.73
76.1 mm	X	½ 15	1 3/16 30.2	1.91 48.5	2.44 62.0	1.71 43.4	5.50 139.7	2.56 65.0	1.6 0.73
		¾ 20	1 3/16 30.2	1.89 48.0	2.44 62.0	1.71 43.4	5.50 139.7	2.56 65.0	1.6 0.73
		1 25	1 3/16 30.2	2.13 54.1	2.79 70.9	1.71 43.4	5.50 139.7	2.56 65.0	1.7 0.80

† Victaulic female threaded products are designed to accommodate standard NPT or BSPT (optional) male pipe threads only. Use of male threaded products with special features, such as probes, dry pendent sprinklers, etc., should be verified as suitable for use with this Victaulic product. Failure to verify suitability in advance may result in assembly problems or leakage.

*Center of run to engaged pipe end for NPT threads (dimensions are approximate).

RSN: ***886786***
Permit #: ***2014-834414-CT***

FireLock® Outlet-T

STYLE 922

PERFORMANCE

Run Size x Outlet Size			Equivalent Length of 1 Inch Schedule 40 Steel Pipe (per UL 213, Section 16) (C=120)*, FT
Inches/mm			Feet/meters
1¼ 32	X	1 25	8.5 2.6
1½ 40	X	1 25	8.5 2.6
2 50	X	1 25	8.5 2.6
2½ 65	X	1 25	8.5 2.6
76.1 mm	X	1 25	8.5 2.6

* Hazen-Williams coefficient of friction is 120

RSN; *886786*
Permit #: *2014-834414-CT*

FireLock® Outlet-T

STYLE 922

INSTALLATION

Reference should always be made to the I-100 Victaulic Field Installation Handbook for the product you are installing. Handbooks are included with each shipment of Victaulic products for complete installation and assembly data, and are available in PDF format on our website at www.victaulic.com.

WARRANTY

Refer to the Warranty section of the current Price List or contact Victaulic for details.

NOTE

This product shall be manufactured by Victaulic or to Victaulic specifications. All products to be installed in accordance with current Victaulic installation/assembly instructions. Victaulic reserves the right to change product specifications, designs and standard equipment without notice and without incurring obligations.

RSN: *886786*
Permit #: *2014-834414-CT*

4.3.8 HDI & HDI-L Drop-In Anchor

4.3.8.1	Product Description
4.3.8.2	Material Specifications
4.3.8.3	Technical Data
4.3.8.4	Installation Instructions
4.3.8.5	Ordering Information

4.3.8.1 Product Description

The Hilti HDI/HDI-L Drop-In anchor is an internally threaded, flush mounted expansion anchor for use in concrete.

Product Features

HDI

- Anchor, setting tool and Hilti drill bit form a matched tolerance system to provide reliable fastenings
- Allows shallow embedment without sacrificing performance
- Lip provides flush installation, consistent anchor depth, and easy rod alignment (HDI-L)
- Lip allows accurate flush surface setting, independent of hole depth (HDI-L)
- Ideal for repetitive fastenings with threaded rods of equal length
- Intelligent expansion section adapts to the base material and reduces number of hammer blows up to 50% (HDI-L)

Guide Specifications

Expansion Anchor Expansion anchors shall be flush or shell type and zinc plated in accordance with ASTM B 633, SC 1, Type III. Anchors shall be Hilti HDI/HDI-L anchors as supplied by Hilti.

Installation Install shell or flush type anchors in holes drilled with Hilti carbide tipped drill bits. Install anchors as per manufacturer's recommendations.





Listings/Approvals

City of Los Angeles
Research Report No. 23709 (HDI Only)
FM (Factory Mutual)
Pipe Hanger Components for Automatic Sprinkler Systems (3/8" - 3/4") (HDI and HDI-L)
UL (Underwriters Laboratories)
UL 203 Pipe Hanger Equipment for Fire Protection Services (3/8" - 3/4")

4.3.8.2 Material Specifications

HDI/HDI-L, 1/4", 3/8", 1/2", and HDI 5/8" and 3/4" are manufactured from mild carbon steel which is plated with a zinc finish for corrosion protection in accordance with ASTM B 633, SC 1, Type III

HDI Stainless Steel material meets the requirements of AISI 303

4.3.8.3 Technical Data

HDI/HDI-L Specification Table

Details		Anchor Size in. (mm)	HDI/HDI-L 1/4 (6.4)	HDI/HDI-L 3/8 (9.5)	HDI/HDI-L 1/2 (12.7)	HDI 5/8 (15.9)	HDI 3/4 (19.1)
d_{bit}	Nominal Bit diameter	in.	3/8	1/2	5/8	27/32	1
h_{nom} ℓ h_1	Std. depth of embed. Anchor length Hole depth	in. (mm)	1 (25)	1-9/16 (40)	2 (51)	2-9/16 (65)	3-3/16 (81)
ℓ_{th}	Useable thread length	in. (mm)	7/16 (11)	5/8 (15)	11/16 (17)	7/8 (22)	1-3/8 (34)
	Threads per inch		20	16	13	11	10
h	min. base material thickness	in. (mm)	3 (76)	3-1/8 (79)	4 (102)	5-1/8 (130)	6-3/8 (162)
T_{max}	max. tightening torque	ft-lb (Nm)	4 (5.4)	11 (14.9)	22 (29.8)	37 (50.2)	80 (108.5)

Combined Shear and Tension Loading

$$\left(\frac{N_d}{N_{rec}}\right)^{5/3} + \left(\frac{V_d}{V_{rec}}\right)^{5/3} \leq 1.0 \text{ (Ref. Section 4.1.2.7)}$$

HDI & HDI-L Drop-In Anchor 4.3.8

Carbon Steel HDI Allowable Loads in Concrete

Anchor size in. (mm)	2000 psi (13.8 MPa)				4000 psi (27.6 MPa)				6000 psi (41.4 MPa)			
	Tension lb (kN)		Shear lb (kN)		Tension lb (kN)		Shear lb (kN)		Tension lb (kN)		Shear lb (kN)	
	HDI	HDI-L	HDI	HDI-L	HDI	HDI-L	HDI	HDI-L	HDI	HDI-L	HDI	HDI-L
1/4 (6.4)	500 (2.2)	500 (2.2)	450 (8.0)	450 (8.0)	570 (2.5)	570 (2.5)	625 (2.8)	625 (2.8)	780 (3.5)	780 (3.5)	700 (3.1)	700 (3.1)
3/8 (9.5)	890 (4.0)	890 (4.0)	965 (4.3)	965 (4.3)	1115 (5.0)	1115 (5.0)	1250 (5.6)	1250 (5.6)	1360 (6.0)	1360 (6.0)	1500 (6.7)	1500 (6.7)
1/2 (12.7)	1120 (5.0)	1120 (5.0)	1500 (6.7)	1500 (6.7)	1785 (7.9)	1785 (7.0)	2125 (9.5)	1940 (8.6)	2345 (10.4)	2345 (10.4)	2500 (11.1)	2500 (11.1)
5/8 (15.9)	1875 (8.3)	–	2500 (11.1)	–	2920 (13.0)	–	3250 (14.5)	–	3715 (16.5)	–	3750 (16.7)	–
3/4 (19.1)	2500 (11.1)	–	3875 (17.2)	–	4065 (18.1)	–	6000 (22.2)	–	5565 (24.8)	–	5590 (24.5)	–

Note: The ultimate shear and allowable shear values are based on the use of SAE Grade 5 bolts. (f_y = 85 ksi, F_{ut} = 120 ksi) with the exception of the 1/4" HDI/HDI-L in f'_c = 6000 psi concrete which is based upon the use of a SAE Grade 8 bolt (f_y = 120 ksi, F_{ut} = 150 ksi).

Carbon Steel HDI Ultimate Loads in Concrete

Anchor size in. (mm)	2000 psi (13.8 MPa)				4000 psi (27.6 MPa)				6000 psi (41.4 MPa)			
	Tension lb (kN)		Shear lb (kN)		Tension lb (kN)		Shear lb (kN)		Tension lb (kN)		Shear lb (kN)	
	HDI	HDI-L	HDI	HDI-L	HDI	HDI-L	HDI	HDI-L	HDI	HDI-L	HDI	HDI-L
1/4 (6.4)	1995 (8.9)	1995 (8.9)	1800 (8.0)	1800 (8.0)	2270 (10.1)	2270 (10.1)	2500 (11.1)	2500 (11.1)	3150 (14.0)	3150 (14.0)	2800 (12.5)	2800 (12.5)
3/8 (9.5)	3555 (15.8)	3555 (15.8)	3850 (17.1)	3850 (17.1)	4460 (19.8)	4460 (19.8)	5000 (22.2)	5000 (22.2)	5430 (24.2)	5430 (24.2)	6000 (26.7)	6000 (26.7)
1/2 (12.7)	4470 (19.9)	4470 (19.9)	6000 (26.7)	6000 (26.7)	7140 (31.8)	7140 (31.8)	8500 (37.8)	7750 (34.4)	9375 (41.7)	9375 (41.7)	10000 (44.5)	10000 (44.5)
5/8 (15.9)	7500 (33.4)	–	10000 (44.5)	–	11685 (52.0)	–	13000 (57.8)	–	14865 (66.1)	–	15000 (66.7)	–
3/4 (19.1)	10000 (44.5)	–	15500 (69.0)	–	16260 (72.3)	–	20000 (89.0)	–	22250 (99.0)	–	22000 (97.9)	–

Carbon Steel HDI Allowable Loads in Lightweight Concrete and Lightweight Concrete over Metal Deck[1, 2]

Anchor Size in. (mm)	Anchor Installed in 3000 psi (20.7 MPa) Lt. Wt. Concrete[3]		Anchor Installed Through Steel Deck Upper Flute into 3000 psi (20.7 MPa) Lt. Wt. Concrete[4]		Anchor Installed Through Steel Deck Lower Flute into 3000 psi (20.7 MPa) Lt. Wt. Concrete[4]	
	Tension, lb (kN)	Shear, lb (kN)	Tension, lb (kN)	Shear, lb (kN)	Tension, lb (kN)	Shear, lb (kN)
1/4 (6.4)	465 (2.1)	340 (1.5)	530 (2.4)	335 (1.5)	375 (1.7)	250 (1.1)
3/8 (9.5)	755 (3.4)	940 (4.2)	880 (3.9)	1010 (4.5)	500 (2.2)	500 (2.2)
1/2 (12.7)	1135 (5.0)	1700 (7.6)	1105 (4.9)	1755 (7.8)	625 (2.8)	750 (3.3)
5/8 (15.9)	1485 (6.5)	2835 (12.6)	–	–	875 (3.9)	875 (3.9)
3/4 (19.1)	2075 (9.2)	3680 (16.4)	–	–	1250 (5.5)	1000 (4.4)

1 The allowable values are based on the use of SAE Grade 2 bolts installed in the anchors.

2 Based on using a safety factor of 4.0.

3 The tabulated shear and tensile values are for anchors installed in structural lightweight concrete having the designated ultimate compressive strength at the time of installation. The concrete must comply with ASTM C 330-77

4 The tabulated shear and tensile values are for anchors installed through 20 gauge intermediate decking into structural lightweight concrete having the designated ultimate strength at the time of installation The concrete must comply with ASTM C 330-77

Stainless Steel HDI Allowable Loads in Concrete

Anchor size in. (mm)	4000 psi (27.6 MPa)		6000 psi (41.4 MPa)	
	Tension lb (kN)	Shear lb (kN)	Tension lb (kN)	Shear lb (kN)
SS HDI – 1/4 (6.4)	480 (2.1)	600 (2.7)	740 (3.3)	600 (2.7)
SS HDI – 3/8 (9.5)	1040 (4.6)	1230 (5.5)	1460 (6.5)	1230 (5.5)
SS HDI – 1/2 (12.7)	1840 (8.2)	2760 (12.4)	2410 (10.7)	2760 (12.3)
SS HDI – 5/8 (15.9)	2630 (11.7)	4510 (20.1)	3770 (16.8)	4510 (20.1)
SS HDI – 3/4 (19.1)	3830 (17.0)	5580 (24.8)	5030 (22.4)	5680 (24.8)

Note: The ultimate and allowable shear values are based on the use of Type 18-8 bolts.

Stainless Steel HDI Ultimate Loads in Concrete

Anchor size in. (mm)	4000 psi (27.6 MPa)		6000 psi (41.4 MPa)	
	Tension lb (kN)	Shear lb (kN)	Tension lb (kN)	Shear lb (kN)
SS HDI – 1/4 (6.4)	1930 (8.6)	2400 (10.7)	2950 (13.1)	2400 (10.7)
SS HDI – 3/8 (9.5)	4170 (18.5)	4920 (21.9)	5850 (26.0)	4920 (21.9)
SS HDI – 1/2 (12.7)	7350 (32.7)	11040 (49.1)	9630 (42.8)	11040 (49.1)
SS HDI – 5/8 (15.9)	10540 (46.9)	18040 (80.2)	15100 (67.2)	18040 (80.2)
SS HDI – 3/4 (19.1)	15340 (68.2)	22320 (99.3)	20130 (89.5)	22320 (99.3)

RSN: *886786*
Permit #: *2014-834414-CT*

4.3.8 HDI & HDI-L Drop-In Anchor

Anchor Spacing and Edge Distance Guidelines (See Anchoring Technology Section 4.1.3)

Anchor Spacing Adjustment Factors

s = Actual Spacing
s_{min} = 2.0 h_{nom}
s_{cr} = 3.5 h_{nom}

Edge Distance Adjustment Factors

c = Actual edge distance
c_{min} = 2.0 h_{nom}
c_{cr} = 3.0 h_{nom}

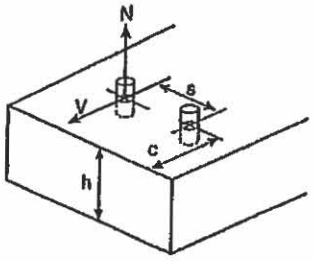

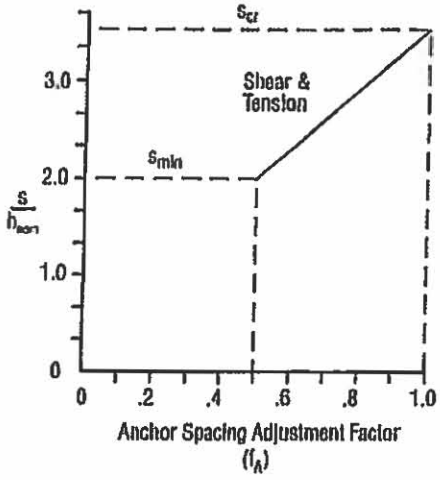

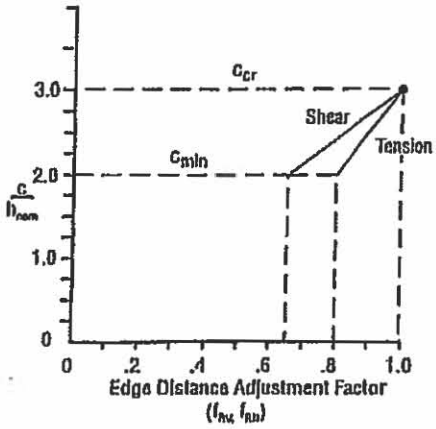

Influence of Anchor Spacing & Edge Distance f_A, f_R

Anchor Size in. (mm)	h_{nom} in. (mm)
1/4 (6.4)	1 (25)
3/8 (9.5)	1-9/16 (40)
1/2 (12.7)	2 (51)
5/8 (15.8)	2-9/16 (65)
3/4 (19.1)	3-3/16 (81)

h_{nom} = standard embedment depth

Load Adjustment Factors (Anchor Spacing) f_A						Load Adjustment Factors (Edge Distance) f_R										
Tension/Shear Loads						Tension, f_{RN}						Shear, f_{RV}				
Spacing s in. (mm)	Anchor Diameter					Edge Distance c in. (mm)	Anchor Diameter					Anchor Diameter				
	1/4	3/8	1/2	5/8	3/4		1/4	3/8	1/2	5/8	3/4	1/4	3/8	1/2	5/8	3/4
2 (51)	.50					2 (51)	.80					.65				
2-1/2 (64)	.67					2-1/2 (64)	.90					.83				
3 (76)	.83	.50				3 (76)	1.0	.80				1.0	.65			
3-1/2 (89)	1.0	.58				3-1/2 (89)		.85					.73			
4 (102)		.69	.50			4 (102)		.91	.80				.85	.65		
4-1/2 (114)		.79	.58			4-1/2 (114)		.98	.85				.96	.74		
5 (127)		.90	.67	.50		5 (127)		1.0	.90	.80			1.0	.83	.65	
5-1/2 (140)		1.0	.75	.55		5-1/2 (140)			.95	.83				.91	.70	
6 (152)			.83	.61	.50	6 (152)			1.0	.87				1.0	.77	
7 (178)			1.0	.74	.57	6-1/2 (165)				.91	.80				.84	.65
8 (203)				.87	.67	7 (178)				.95	.84				.91	.72
9 (229)				1.0	.77	8 (203)				1.0	.90				1.0	.83
10 (254)					.88	9 (229)					.96					.94
11 (279)					.98	10 (254)					1.0					1.0
12 (305)					1.0											
s_{min} = 2.0 h_{nom}, s_{cr} = 3.5 h_{nom} $f_A = 0.33 \frac{s}{h_{nom}} - 0.17$ for $s_{cr} > s > s_{min}$						c_{min} = 2.0 h_{nom}, c_{cr} = 3.0 h_{nom} $f_{RN} = 0.2 \frac{c}{h_{nom}} + 0.4$ for $c_{cr} > c > c_{min}$						c_{min} = 2.0 h_{nom}, c_{cr} = 3.0 h_{nom} $f_{RV} = 0.35 \frac{c}{h_{nom}} - 0.05$ for $c_{cr} > c > c_{min}$				

RSN: *886786*
Permit #: *2014-834414-CT*

4.3.8.4 Installation Instructions

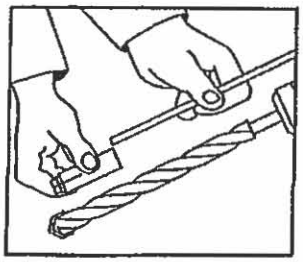

1 Adjust depth gauge so that anchor will be flush with the concrete surface when installed.

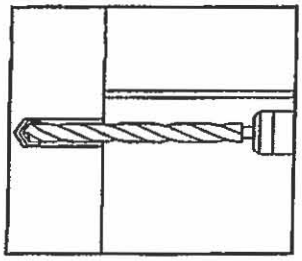

2. Hammer drill hole.

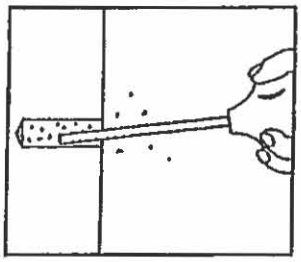

3 Clean hole.

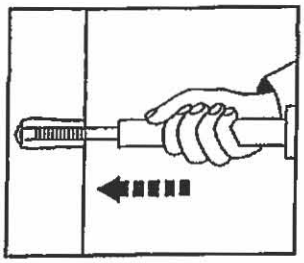

4. Install anchor using proper setting tool. Setting tool to be driven into anchor until setting tool shoulder meets top of anchor.

4.3.8.5 Ordering Information

HDI Anchors

Anchor Thread Size	Carbon Steel				Stainless Steel		Box Qty
	Description	Item No.	Description	Item No.	Description	Item No.	
1/4"	HDI 1/4	336425	HDI-L 1/4	283608	HDI 1/4 (SS 303)	336430	100
3/8"	HDI 3/8	336426	HDI-L 3/8	283609	HDI 3/8 (SS 303)	336431	50
1/2"	HDI 1/2	336427	HDI-L 1/2	283610	HDI 1/2 (SS 303)	336432	50
5/8"	HDI 5/8	336428	–	–	HDI 5/8 (SS 303)	336433	25
3/4"	HDI 3/4	336429	–	–	HDI 3/4 (SS 303)	336434	25

Setting Tools for HDI & HDI-L Anchors

Anchor Thread Size	Description – Manual Setting Tools	Item No.
1/4"	HST 1/4 Setting Tool	00032978
3/8"	HST 3/8 Setting Tool	00032979
1/2"	HST 1/2 Setting Tool	00032980
5/8"	HST 5/8 Setting Tool	00032981
3/4"	HST 3/4 Setting Tool	00032982
Anchor Thread Size	**Description – Automatic Setting Tools[1]**	**Item No.**
3/8"	HSD-MM 3/8" (TE-C-24SD10 3/8" Setting tool)	00243751
1/2"	HSD-MM 1/2" (TE C 24SD12 1/2" Setting tool)	00243752

1 Use automatic setting tools with TE-5A, TE-6, TE-15, TE-16, TE-16C, TE-18 and TE-25 rotary hammer drills.





RSN: *886786*
Permit #: *2014-834414-CT*

In The United Sates

PAYMENT TERMS: Net 30 days from date of invoice. Customer agrees to pay all costs incurred by Hilti in collecting any delinquent amounts, including attorney's fees.

FREIGHT: All sales are F.O.B. Destination with transportation allowed via Hilti designated mode. Delivery dates are estimates only. Additional charges for expedited shipments, special handling requirements, and orders below certain dollar amounts shall be the responsibility of Customer. Fuel surcharges may apply depending on market conditions

CREDIT: All orders sold on credit are subject to Credit Department approval.

RETURN POLICY: Products must be in saleable condition to qualify for return. Saleable condition is defined as unused items in original undamaged packaging and unbroken quantities and in as-new condition. All returns are subject to Hilti inspection and acceptance, and a $125 restocking charge if returned more than 90 days after invoice date. Proof of purchase is required for all returned materials. Special orders products and discontinued items are not eligible for return credit. Dated materials are only returnable in case quantity, and within 30 days after invoice date.

WARRANTY: Hilti warrants that for a period of 12 months from the date it sells a product it will, at its sole option and discretion, refund the purchase price, repair, or replace such product if it contains a defect in material or workmanship. Absence of Hilti's receipt of notification of any such defect within this 12-month period shall constitute a waiver of all claims with regard to such product.

THE FOREGOING WARRANTY IS IN LIEU OF ALL OTHER WARRANTIES, EXPRESS OR IMPLIED, INCLUDING BUT NOT LIMITED TO THE IMPLIED WARRANTIES OF MERCHANTABILITY AND FITNESS FOR A PARTICULAR PURPOSE. Hilti shall in no event be liable for, and Customer hereby agrees to indemnify Hilti against all claims related to special, direct, indirect, incidental, consequential, or any other damages arising out of or related to the sale, use, or inability to use the product.

ACCEPTANCE OF ORDER: Acceptance is limited to the express terms contained herein, and terms are subject to change by Hilti without notice. Additional or different terms proposed by Customer are deemed material and are objected to and rejected, but such rejection shall not operate as a rejection of the offer unless it contains variances in the terms of the description, quantity, price or delivery schedule of the goods. Orders are not deemed "accepted" by Hilti unless and until it ships the associated items.

DOMESTIC ORIGIN: Any non-domestic Hilti product will be so identified on shipping documents and invoices for customers who properly identify themselves as a federal government entity. All other customers may obtain such information by written request to Hilti, Inc., Contract Compliance, P.O. Box 21148, Tulsa, Oklahoma 74121 Hilti's Quality Department personnel are the only individuals authorized to warrant the country of origin of Hilti products.

BUSINESS SIZE: Hilti is a large business.

PRICES: Prices are those stated on the order, and unless otherwise noted are based on purchasing all items on the order — pricing for individual products may vary for purchases of different quantities or item combinations. Hilti does not maintain most favored customer records, makes no representation with respect to same, and rejects any price warranty terms proposed by Customer. Hilti's published net price list is subject to change without notice.

CONSENT TO JURISDICTION: All transactions made pursuant hereto shall be deemed to have been made and entered into in Tulsa, Oklahoma. Any and all disputes arising directly or indirectly from such transactions shall be resolved in the courts of the County of Tulsa, State of Oklahoma, to the exclusion of any other court, and any resulting judgment may be enforced by any court having jurisdiction of such an action. All transactions shall be governed by and construed in accordance with the laws of the State of Oklahoma.

INDEMNIFICATION: Customer hereby agrees to indemnify Hilti for any costs, including attorney's fees, incurred by Hilti as a result, in whole or in part, of any violation by Customer of any Federal, State or Local statute or regulation, or of any nationally accepted standard. It shall be Customer's sole responsibility to comply with all applicable laws and regulations regarding the handling,use, transportation, or disposal of products upon taking possession of same.

AUTHORIZATION: HILTI LEGAL DEPARTMENT PERSONNEL ARE THE ONLY INDIVIDUALS AUTHORIZED TO MODIFY THESE TERMS AND CONDITIONS, WARRANT PRODUCT SUITABILITY FOR SPECIFIC APPLICATIONS, OR EXECUTE CUSTOMER DOCUMENTS, AND ANY SUCH ACTION IS NULL AND VOID UNLESS IN WRITTEN FORM SIGNED BY SUCH INDIVIDUAL.

In Canada

PAYMENT TERMS: Net 30 days from date of invoice. Customer agrees to pay all costs incurred by Hilti in collecting delinquent amounts, if any, including reasonable attorney's fees.

FREIGHT: Sales are F.O.B. Destination Point with transportation allowed via Hilti designated mode. Additional charges may apply for expedited delivery, special handling requirements, and order under certain limits. A fuel surcharge may apply depending on market conditions.

CREDIT: All orders sold on credit are subject to Credit Department approval.

RETURN POLICY: Product may be returned prepaid (unless otherwise authorized) to Hilti provided:

i) it is returned by the original purchaser

ii) it is not dated product returned more than 30 days after the original delivery date

iii) it is not discontinued, clearance or special order product

iv) it is unused, in original packaging and in unbroken quantities.

Hilti will inspect product and, if the above requirements are satisfied, will credit to customer the original purchase price. A 15% restocking fee may apply.

WARRANTY: Other than the manufacturer's published warranty, no warranties or conditions, express or implied, written or oral, statutory or otherwise are implied. Any and all conditions and warranties implied by law or by the Sale of Goods Act or any similar statutes of any Province are hereby expressly waived.

TITLE TO PRODUCT: Title to product remains with Hilti until the total purchase price of product is paid.

PRICES: Customer agrees to pay Hilti prices set out on invoice. Customer agrees to pay taxes as indicated on invoice unless Hilti receives acceptable exemption certificates.

INDEMNIFICATION: Customer agrees to use product at own risk and to indemnify Hilti against all liabilities, including legal fees, to third parties arising out of the use or possession thereof. Hilti shall in no event be liable for special, incidental or consequential damages.

CHANGES: Hilti sales personnel are not authorized to modify these Terms and Conditions or modify Customer's credit terms. Terms are subject to change by Hilti with reasonable notice to Customer.

CASH SALES: Payment in full is due prior to goods being released.

QUOTATIONS: All terms and conditions apply once customer agrees to purchase product. Quotations on special promotion products are only valid until end of promotion period.

RSN: *886786*
Permit #: *2014-834414-CT*

4.3.9 HDI-P Drop-In Anchor

4.3.9.1 Product Description
4.3.9.2 Material Specifications
4.3.9.3 Technical Data
4.3.9.4 Installation Instructions
4.3.9.5 Ordering Information



Listings/Approvals

ICC-ES (International Code Council)
ESR-1291
COLA (City of Los Angeles)
Research Report No. 25350
Factory Mutual (FM)
Pipe Hanger Components for Automatic Sprinkler Systems

4.3.9.1 Product Description

The Hilti HDI-P Drop-In anchor is an internally threaded, flush mounted expansion anchor for solid and hollow concrete.

Product Features

- Optimized 3/4" anchor length to allow reliable fastenings in hollow core panels, precast plank & post tensioned slabs
- Shallow drilling enables fast installation
- Lip provides flush installation, consistent anchor depth and easy rod alignment
- Setting tool leaves mark on flange when anchor is set properly to enable inspection & verification of proper expansion

Guide Specifications

Expansion Anchor Expansion anchors shall be flush or shell type and zinc plated in accordance with ASTM B 633, SC 1, Type III. Anchors shall be Hilti HDI-P anchors as supplied by Hilti.

Installation Install shell or flush type anchors in holes drilled with Hilti carbide tipped drill bits. Install anchors in accordance with manufacturer's recommendations.

4.3.9.2 Material Specifications

The HDI-P is manufactured from mild carbon steel, which is zinc plated for corrosion protection in accordance with ASTM B 633, SC 1, Type III

4.3.9.3 Technical Data

HDI-P Specification Table

Dsc.	Length in. (mm)	Bit Size[1] in.	Average Ultimate Loads, lb (kN)				Allowable Loads, lb (kN)			
			4000 psi Concrete (27.6 MPa)		Hollow Core (Spancrete)		4000 psi Concrete (27.6 MPa)		Hollow Core (Spancrete)	
			Tension	Shear	Tension	Shear	Tension	Shear	Tension	Shear
HDI-P 3/8	3/4 (19.1)	1/2	1900 (8.5)	3000 (13.3)	2100 (9.3)	4000 (17.8)	380 (1.7)	600 (2.7)	420 (1.9)	800 (3.6)

1 For Hilti matched tolerance carbide tipped drill bits, see section 8.4.1.

4.3.7.4 Installation Instructions

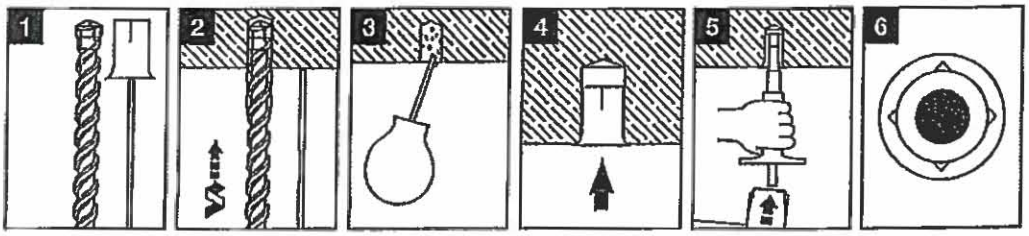

1. Set depth gauge on drill.
2. Hammer-drill hole.
3. Clean hole.
4. Insert anchor.
5. Insert setting tool and strike with hammer until anchor is fully set.
6. Collar of setting tool will leave an indentation on flange of anchor when properly expanded.

4.3.9.5 Ordering Information

HDI-P Anchor

Item No.	Description	Bit Dia	Box Qty
283611	HDI-P 3/8	1/2"	100

Setting Tools for HDI-P Anchors

Item No.	Description
283611	HSD-G 3/8" – 3/4" Setting Tool w/ hand guard
253784	HST-P 3/8" – 3/4" Setting Tool

RSN: ***886786***
Permit #: ***2014-834414-CT***

Fig. 200 - "Trimline" Adjustable Band Hanger

Size Range — 1/2" thru 8" pipe

Material — Carbon Steel, Mil. Galvanized to G90 specifications

Function — For fire sprinkler and other general piping purposes. Knurled swivel nut design permits hanger adjustment after installation.

Features —

- (1/2" thru 2") Flared edges ease installation for all pipe types and protect CPVC plastic pipe from abrasion. Captured design keeps adjusting nut from separating with hanger. Hanger is easily installed around pipe.
- (2½" thru 8" Spring tension on nut holds it securely in hanger before installation. Adjusting nut is easily removed.

Approvals — Underwriters' Laboratories listed (1/2" thru 8") in the USA **(UL)** and Canada **(cUL)** for steel and CPVC plastic pipe and Factory Mutual Engineering Approved (3/4" thru 8"). Conforms to Federal Specifications WW-H-171E, Type 10 and Manufacturers Standardization Society SP-69, Type 10.

Maximum Temperature — 650°F

Finish — Mil. Galvanized. For Stainless Steel materials, order TOLCO™ Fig. 200WON.

Order By — Figure number and pipe size

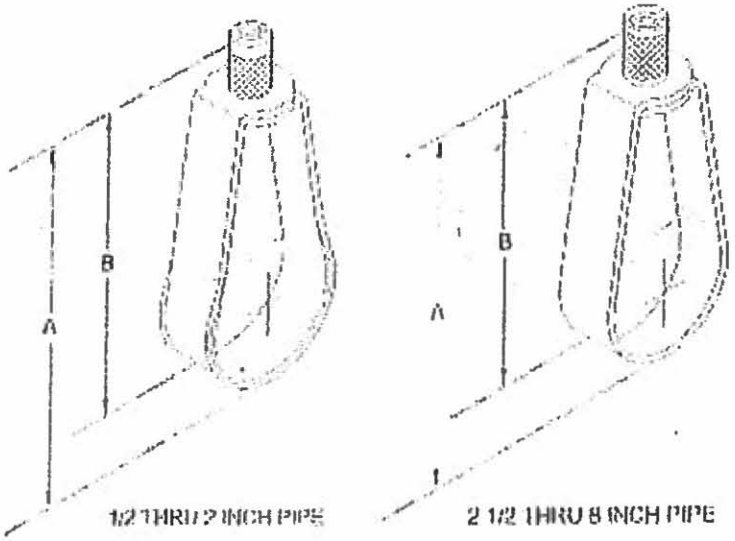

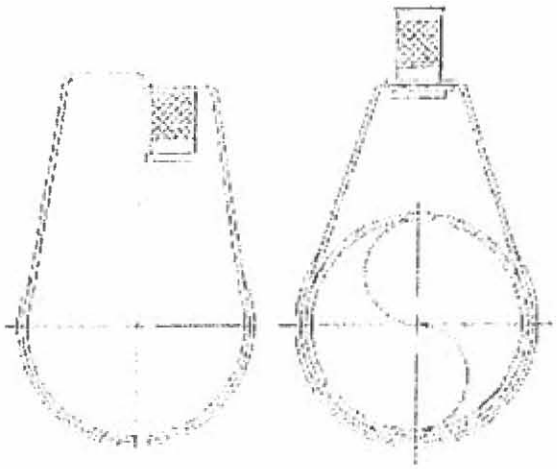

Dimensions • Weights

Pipe Size	Rod Size Inch	Rod Size Metric	A	B	Max. Rec. Load Lbs.	Approx. Length
1/2	3/8	8mm or 10mm	3 1/8	2 5/8	400	11
3/4	3/8	8mm or 10mm	3 1/8	2 1/2	400	11
1	3/8	8mm or 10mm	3 3/8	2 5/8	400	12
1 1/4	3/8	8mm or 10mm	3 3/4	2 7/8	400	13
1 1/2	3/8	8mm or 10mm	3 7/8	2 7/8	400	14
2	3/8	8mm or 10mm	4 1/2	3	400	15
2 1/2	3/8	10mm	5 5/8	4 1/8	600	27
3	3/8	10mm	5 7/8	4	600	29
3 1/2	3/8	10mm	7 3/8	5 1/4	600	34
4	3/8	10mm	7 3/8	5	1000	35
5	1/2	12mm	9 1/8	6 1/4	1250	66
6	1/2	12mm	10 1/8	6 3/4	1250	73
8	1/2	12mm	13 1/8	8 3/4	1250	136

Main Office/Manufacturing Facility • 1375 Sampson Ave. • Corona, CA 92879 • Ph: 909.737.5599 • Fax: 909.737.0330
Customer Service • 800.786.5266

RSN: *886786*
Permit #: *2014-834414-CT*

Fig. 65 and Fig. 66
Reversible C-Type Beam Clamps 3/4" and 1¼" Throat Openings

Size Range — (Fig. 65 and Fig. 66) 3/8", 1/2" and 5/8" rod
Material — Carbon Steel with hardened cup point set screw and jam nut
Function — Recommended for hanging from steel beam where flange thickness does not exceed 3/4" (Fig. 65) or 1¼" (Fig. 66).
Features — All steel construction eliminates structural deficiencies associated with casting type beam clamps. May be used on top or bottom flange of the beam. (Beveled lip allows hanging from top flange where clearance is limited.) May be installed with set screw in up or down position. Offset design permits unlimited rod adjustment by allowing the rod to be threaded completely through the clamp. Open design permits inspection of thread engagement.
Approvals — Underwriters' Laboratories Listed in the USA (UL) and Canada (cUL). Factory Mutual Engineering approved. Conforms to Federal Specification WW-H-171E, Type 23 and Manufacturers Standardization Society SP-69, Type 19. Exceeds requirements of the National Fire Protection Association (NFPA), Pamphlet 13, 3/8" rod will support 1/2" thru 4" pipe, 1/2" rod will support 1/2" thru 8" pipe.
Finish — Plain
Note — Available in Electro-Galvanized and HDG finish.
Order By — Figure number, rod size and finish

Fig. 65 Patent #4,570,885

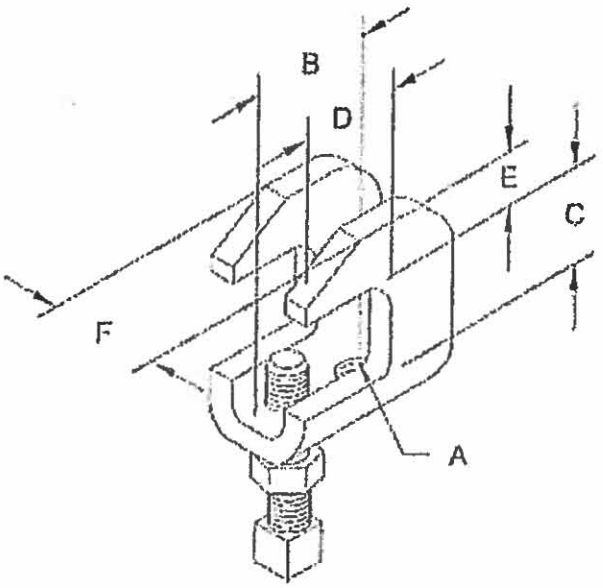

Fig. 65

Dimensions • Weights

Rod Size A	B	C	D	E	F	Max. Rec. Load Lbs.*	Approx. Wt./100
3/8	1 3/16	3/4	1	7/16	1	610	28
1/2	1 1/2	3/4	1	9/16	1¼	1130	55
5/8	1 1/2	3/4	1	9/16	1¼	1130	55

* Max. loads for clamp with set screw in up or down position.

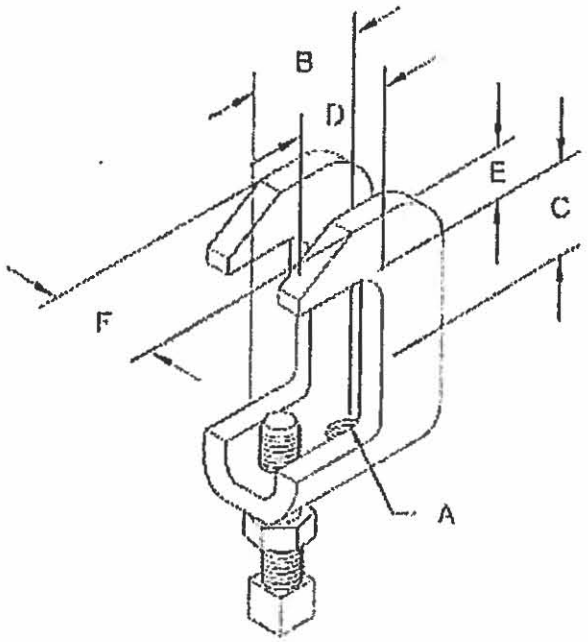

Fig. 65

Dimensions • Weights

Rod Size A	B	C	D	E	F	Max. Rec. Load Lbs.*	Approx. Wt./100
3/8	1 3/16	1¼	1	7/16	1	610	28
1/2	1 1/2	1¼	1	9/16	1¼	1130	55
5/8	1 1/2	1¼	1	9/16	1¼	1130	55

* Max. loads for clamp with set screw in up or down position.

RSN: *886786*
Permit #: *2014-834414-CT*

Fig. 98 - Rod Stiffener

Size Range — Secures 3/8" thru 7/8" hanger rod
Material — Carbon Steel
Function — Secures channel to hanger rod for vertical seismic bracing.
Finish — Electro Galvanized
Note — Available in HDG finish or Stainless Steel materials.
Order By — Figure number

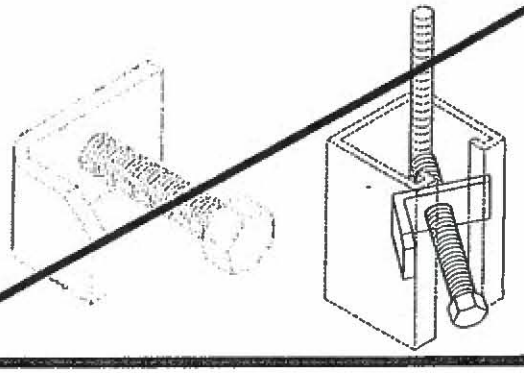

Fig. 99 - All Thread Rod Cut to Length

Size Range — Secures 3/8" thru 7/8" rod in 1" increments
Material — Carbon Steel
Maximum Temperature — 750°F
Finish — Plain
Note — Available in Electro-Galvanized and HDG finish or Stainless Steel materials.
Order By — Figure number, rod diameter, rod length and finish

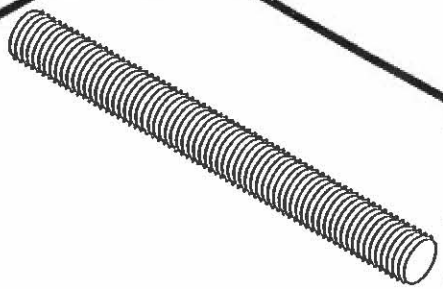

Dimensions • Weights

Rod Size	Max. Rec. Load Lbs. For Service Temps 650°F	750°F
3/8	610	540
1/2	1130	1010
5/8	1810	1610
3/4	2710	2420
7/8	3770	3360

Fig. 100 - All Thread Rod Full Lengths

Size Range — Secures 3/8" thru 7/8" rod in 10' lengths
Material — Carbon Steel
Maximum Temperature — 750°F
Finish — Plain
Note — Available in Electro-Galvanized and HDG finish or Stainless Steel materials.
Order By — Figure number, rod diameter and finish

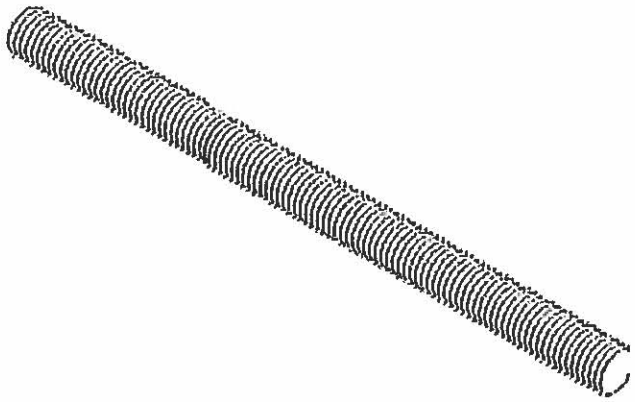

Dimensions • Weights

Rod Size	Max Rec. Load Lbs. For Service Temps 650°F	750°F	Approx. Wt./100
1/4	240	215	12
3/8	610	540	29
1/2	1130	1010	53
5/8	1810	1610	84
3/4	2710	2420	123
7/8	3770	3360	169
1	4960	4420	222
1¼	8000	7140	360
1½	11630	10370	510

Main Office/Manufacturing Facility • 1375 Sampson Ave. • Corona, CA 92879 • Ph: 909.737.5599 • Fax: 909.737.0330
Customer Service • 800.786.5266