City of Aurora
Building Codes Division
15151 E Alameda Pkwy
Aurora, CO 80012
(303) 739-7420

Notice

This material is subject to copyright protection pursuant to Federal Law: 17 United States Code Section 106.

Permit Application: BUILDING~FENCE~ SIGN

Building Division ~15151 E Alameda Pkwy ~ Aurora, CO 80012~ (303) 739-7420

Project Address: 1400 POTOMAC ST. Unit # 240 Zip code: 80012
Project Name/Subdivision: COLO. ENT SPECIALISTS
Contractor: TBD Phone: Fax:
Contact Person: MICHAEL HAIDER Email: MICHAEL@TENPLAN.COM
Phone: 3-861-4800 Fax: 3-861-1621
Owner: (Required for CO)
Owner address: CB RICHARD ELLIS Valuation / FDA: $ 110,000 ✓
Email:

REQUIRED FOR PROJECTS USING AN ARCHITECT and/or ENGINEER:
Architect or Engineer Name: Email:
Phone #: Fax #:

DESCRIBE THE WORK YOU WILL BE DOING: *
EXISTING TENANT EXPANDING TO ADJACENT SUITE
PROVIDE TEN FINISH, CARPET, PAINT, BOTH EXIST + EXP. SPACE
Combining ste 240 & 250

SIGN PERMIT: Sign review will establish allowables. Use description above for additional information.
Monument sign? ☐Y ☐N Is height from grade more than 6': ☐Y ☐N
Electrician: (Required for any illuminated sign) Any existing waivers ☐Y ☐N If yes provide copy

FENCE PERMIT: Style/Type: * Describe work above ☐ Corner lot ☐ Interior lot Use Zone:
Height in. Greater than 50% open: ☐ Less than 50% open: ☐ Post size: ☐ x ☐ Post spacing:

NEW HOME CONSTRUCTION ONLY:
Model #: Elevation: Foundation Type: Basement Type: Unfinished:
Number of Deck(s): Covered: Uncovered: Size of Deck (s): Concrete Patio(s):
Covered: Uncovered: Size of Patio Cover: GFA – Qty: BTU's: /
Gas range/BBQ/oven/cook top: BTU's Qty AC/Cooler/CFM/Ton: Fireplace(qty):
BTU's: / Misc: Shower #: Lavatory #: Bathtub #: Water Closet #:
Water heater type: BTU'S: # Electrical Svc AMP: Other:

BOARD OF APPEALS - Contractor's Appeals and Standards Board. Applicants have the right to have the board hear appeals of orders, decisions or determinations made by the building official relative to the application and interpretation of the building code. Any application for appeal to the board shall be based on a claim that the true intent of the code or the rules legally adopted there under have been incorrectly interpreted, the provisions of the building code do not fully apply or an equally good or better form of construction is proposed.

◆◆◆◆ THIS SPACE FOR OFFICE USE ONLY ◆◆◆◆

Fee Determination Assessment: $ 110,000.00 →

Change of occupancy/use: Y ☐ N ☑

REVIEWS		INSPECTIONS	
☐	Sign		
☑	Structural	☑	Structural
☑	Mechanical	☑	Mechanical
☑	Plumbing	☑	Plumbing
JC ☒	Electrical	☒	Electrical
☐	Fire Life Safety	☐	Life Safety
☑	Bldg Life Safety	☐	Gate/Haz.

Intake Date: 5/6/10

Water pre-approval: 5-6-2010
Zoning pre-approval: No Ext. Work
Parent Permit RSN:
Parent Plan Location
Permit Type: TF
Sub Type:
Plans Examiner: K
Verify Homeowner:
Zoning class/Parking fac:
RSN: 535147
Permit #: 10 468729
Balance Due: $

Sprinkler & Alarm permits must be brought in as separate submittals. "FDA" is NOT included in main permit.

ISHMAEL ORENDAIN — Signature: — 5-6-10
Print Name: Signature: Date:

Colorado ENT Specialists
Remodel / Expansion

Abbreviations

Ø	diameter
℄	centerline
A	ampere
A/C	air conditioning
A/V	audio/visual
ADA	Americans with Disabilities Act
AFF	above finished floor
alt.	alternate
amp.	ampere
approx.	approximately
C.	conduit
CKT	circuit
clg.	ceiling
clr.	clear
const.	construction
d.	depth/deep
dia.	diameter
dim.	dimension
DN	down
DW	dishwasher
E	existing device/fixture
Elev.	elevator
eq.	equal
EWC	electric water cooler
EWH	electric water heater
F.D.	floor drain
F.E.	finished end
F/A	fire alarm
FEC	fire extinguisher cabinet
FHC	fire hose connection
fin.	finish
ga.	gauge
gyp. bd.	gypsum board
h.	height/high
H.C.	hollow core
H.M.	hollow metal
HVAC	heating, ventilating, air conditioning
I.F.	inside face
I.T.	information technology
Jan.	janitor/janitorial
J-Box	junction box
l.	length/long
mfd.	manufactured
mw	microwave
mil	millimeter
min.	minimum
N	new device/fixture
NIC	not in contract
nom.	nominal
NTS	not to scale
o.c.	on center
O.H.	opposite hand
Opp.	opposite
Orig.	original
P. Lam.	plastic laminate
R	relocated device/fixture
R.O.	rough opening
R/A	return air
Re:	refer to
reqd.	required
RM.	room
RSF	rentable square feet
S.C.	solid core
S.M.	surface mounted
S.S.	service sink
S.Stl.	stainless steel
S/A	supply air
SDT	static dissipative tile
SF	square feet
sim.	similar
sq.yd.	square yard
std.	standard
T.O.	throughout
TBD	to be determined
th.	thick
typ.	typical
U.L.	Underwriters Laboratory
UNO	unless noted otherwise
USF	usable square feet
V.	volt
VCT	vinyl composition tile
VIF	verify in field
w.	width/wide
W.S.	work station
w/	with
WC	wallcovering
WF	water fountain

Reference Symbols

- Keyed Note
- Center Line
- Detail Reference / Detail Number Sheet Reference
- Section Reference / Section Number Sheet Reference
- Elevation Reference / Elevation Number Sheet Reference
- Elevation Reference / Elevation Number Sheet Reference
- Door Reference Tag
- Plastic Laminate Reference / Plastic Laminate Number

Definitions

- **Approve**: where used in conjunction with TPS's or its consultant's response to submittals, requests, applications, inquiries, reports and claims by the contractor, the meaning of the term 'approved' will be held to the limitations of TPS's responsibilities and duties as specified in the general conditions and supplementary conditions. In no case will 'approved' by TPS be interpreted as an assurance to the contractor that the requirements of the contract documents have been fulfilled.
- **Furnish**: except as otherwise defined in greater detail, the term 'furnish' is used to mean to supply and deliver to the project site, ready for unloading, unpacking, assembly and installation, etc. as applicable in each instance.
- **Install**: except as otherwise defined in greater detail, the term 'install' is used to describe operations at the project site including unloading, unpacking, assembly, erection, placing, anchoring, applying, working to dimension, finish, curing protection, cleaning and similar operations, as applicable in each instance.
- **Provide**: except as otherwise defined in greater detail, the term 'provide' means to furnish and install, complete and ready for the intended use as applicable in each instance.
- **Products**: defined as products which must be substantially cut, shaped, worked, mixed, furnished, refined otherwise fabricated, processed, installed or applied to form units of work.
- **Equipment**: defined as products with operational parts, regardless of whether motorized or manually operated, and particularly including connections (wiring, piping, etc.).
- **Typical**: 'typical' or 'typ' means identical for all similar conditions.
- **Similar**: 'similar' or 'sim' means comparable to characteristics for the condition noted. Verify dimensions and orientation on plan.
- **As required**: 'as required' means as required by regulatory requirements, by referenced standards, by existing conditions, by generally accepted construction practice, or by the contract documents.
- **Align**: 'align' means accurately locate finish faces of materials in same plane.
- **Relocate**: means to reuse a particular device, fixture, or item in a new location.
- **Remain**: to continue unchanged.
- **Reused**: to use again especially in a new way or in a new location.

Dimensional Conventions

1. Except where directed to place items of the work at the "approximate location shown," do **not** scale drawings for dimensional information. All elements of the drawings **may** not be drawn to exact scale. All dimensions required are shown, or may be derived from those shown on the floor plans, detail plans, elevations, sections, details, schedules, and specifications. See notes on this sheet **and** symbols on the "Architectural Symbols" drawing for dimensions conventions used on this project.
2. Do not scale drawings; dimensions shall govern, details shall govern over plans and elevations. Large scale plans shall govern over small scale plans. Large scale details shall govern over small scale details. If unable to locate dimensions for any item of work, consult the Architect prior to construction.
3. All heights are dimensioned from top of existing slab unless noted 'AFF. (Above Finished Floor).
4. Dimensions are not adjustable, unless noted (+/-). Without the TPS's written approval.
5. Except where specifically noted to the contrary, all dimensions shown on the architectural drawings conform to the following conventions:
   A. Dimensions utilizing the "centerline" symbol are measured to:
      - Structural or dimensional grid lines.
      - Centerline of wall or partition assemblies, exclusive of any applied finish having thickness
      - Centerline of door, window, cased opening and window mullion.
   B. Dimensions typically utilized are to the face of finished wall and are measured to:
      - Face of finished wall
      - Inside edge of finished door opening. Refer to "door schedule" for additional information.
      - Finish faces at the most narrow or constricted points of the section where dimension is shown when the dimension occurs across an open space. In this case, a "face of finish" dim is equivalent to a "clear" dimension.

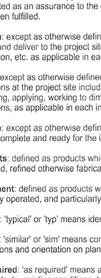

Where two different walls (type or thickness') abut and are not individually dimensioned, align exposed edges, (UNO).

6. Where dimensions are not provided on the floor plans to locate door openings, apply the following rules, in order, to determine the location of door openings.
   A. Door openings may be dimensioned on drawings other than the floor plans. Refer to the sections, elevations, details, and door schedule notes for additional dimensional information.
   B. Where the hinge-side of a door is shown adjacent to a wall, or walls, perpendicular to the wall in which the door opening occurs, locate the hinge-side finished edge of the door opening 4 inches from the face (exclusive of any applied finish) of the closest perpendicular wall or partition assembly.

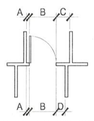

Dimensional Key

- A = 4" (min.)
- B = Refer to Door Schedule
- C = 18" (min.) at Pull Side
- D = 12" (min.) at Push Side

General Notes

1. **GENERAL STANDARDS**: All work defined herein shall be constructed in accordance with the approved drawings and specifications and shall be in compliance with all applicable codes, ordinances, and regulations. Work performed in the shop or on-site shall be performed by mechanics, craftsmen and workers skilled and experienced in the fabrication and installation of the work involved. The work shall be performed in accordance with the best established practices of the industry standard for the trade involved.
2. **FEES AND PERMITS**: The General Contractor shall obtain all licenses and permits required by the jurisdiction and/or its agencies, not withstanding licenses and permits that may be required of respective subcontractors. The cost of said licenses and permits shall be incurred by that contractor responsible for the procurement of same.
3. **DRAWINGS AND SPECIFICATIONS**: The General Contractor shall maintain a complete and current set of project documents, drawings and specifications on the job site at all times and shall include all approved shop drawings and submittals. The General Contractor shall be responsible for distribution of adequate copies of all drawings and specifications to all applicable trades. Upon completion of the work, the General Contractor shall submit one complete set of red-lined drawings to TPS indicating any and all changes, omissions, or modifications made.
4. **ENGINEERED DRAWINGS**: Refer to structural, mechanical, electrical and plumbing drawings (when provided) for detailed design of the structural, mechanical, electrical, and plumbing systems. Portions of this work may be shown on the architectural drawings for reference to, and in coordination with, other work.
   A. When indicated on the drawings, the General Contractor shall provide engineering drawings on a design/build basis for mechanical systems, electrical systems and plumbing. Provide one copy of all drawings to TPS for review prior to construction.
   B. The General Contractor is responsible for required permits and approvals necessary for the work as described above. Precedence: the architectural drawings shall precede the engineered drawings (if provided) relative to device and fixture locations.
5. **OMISSIONS AND DISCREPANCIES**: The General Contractor shall field verify all conditions and dimensions shown on the drawings, and shall notify TPS of any discrepancies, omissions or conflicts prior to commencing with construction.
6. **MATERIALS**: Unless otherwise specified, all materials shall be new, unused, and in compliance with the specifications set forth in these documents. All materials used throughout the project shall be of the same brand name and quality for consistency. All materials must meet the ASTM and ANSI standards and be in compliance with all applicable codes, ordinances and regulations. Unless authorized in writing by the owner or its representative, no existing fixture, device or component shall be removed from adjacent areas or buildings to facilitate this project.
7. **MATERIAL INVENTORY**: Upon award of the construction contract, and when building materials are stocked and made available for the project, coordinate with the Building Representative for purchase of materials. All materials shall be bid as if new. Do not assume use of materials from building stock.
8. **SUBMITTALS/DEVIATIONS**: No substitutions, variations and deviations from these documents shall be permitted without prior approval of TPS, the Building and/or Tenant's Representative. Application for any substitutions and/or variations shall be submitted to TPS by the General Contractor for approval. Application shall be made in writing accompanied with product specifications and/or samples. Five complete sets of submittals are required.
9. **SHOP DRAWINGS**: When requested on the drawings, the General Contractor shall prepare, review, approve and submit shop drawings to TPS. The General Contractor shall check and coordinate all product data and samples and verify all materials, field measurements and related field construction criteria contained in such submittal conforms to the requirements of the work, and the contract documents. Five complete sets of submittals are required.
10. **SUBCONTRACTORS**: The General Contractor shall coordinate and review the work of all subcontractors, trades and suppliers, and to make known all requirements of the contract documents, and to assure that all parties are fully aware of the requirements, regardless of whether the requirements occur in the contract documents, which might affect the work of that party. Subcontractors shall conform to the following:
    A. Subcontractors shall coordinate all installations, schedules, locations, decisions, sizes, and resolve all conflicts and interferences of their trade with other trades.
    B. Subcontractors shall be responsible for coordinating routes of water, sprinkler, mechanical and electrical services.
    C. Light fixtures/ fittings, diffusers/ ducts, sprinkler heads, etc. as depicted on the drawings, both above and below the ceiling, which conflict with any existing services shall be reported immediately when it becomes apparent that a conflict will prevail. All costs incurred by the General Contractor or other subcontractors for failure to report conflicts immediately shall be borne by the contractor.
11. **TENANT VENDORS**: The General Contractor shall be responsible for coordinating with the Tenant and the Tenant's vendors for scheduling and providing access to the space for the Tenant's movable partition systems, communications/ data processing systems, security systems, and audio/ video systems.
12. **INSPECTIONS**: The General Contractor shall permit and facilitate inspection, by the owner and the architect or their representatives, during the course of construction.
13. **TENANT RESPONSIBILITIES**: Unless specified otherwise in the contract documents, the following items are not a part of these drawings and if so desired shall be provided by the Tenant.
    - Furnishings, files and accessories
    - Portable or movable office partitions
    - Racks, bins, prefabricated shelving systems
    - Coffee makers, microwaves, refrigerators, vending machines
    - Copy/fax equipment and computer equipment
    - Security systems, sound systems, intercom systems
    - Telephone equipment including wiring/cabling
    - Clocks, time clocks
    - Connection of all equipment, furnishings and panels
    - Moving or relocation of Tenant's furnishings, fixtures, and equipment
    - Schedule and coordination of Tenant vendors
14. **PROTECTION**: The General Contractor shall protect the work, adjacent space/property, common areas, public utilities, and the public, and shall be responsible for any damage or injury due to neglect. Protection shall include but not be limited to the following:
    A. Draw window coverings and wrap or bag with plastic for dust protection.
    B. Provide plywood or masonite floor protection with tape sealed joints completely along routes used for delivery and removal of materials.
    C. Provide and/or use protective pads at designated freight elevator cab walls and around openings.
    D. When necessary, x-ray the floor slab to confirm locations of objects embedded in the concrete prior to making any penetrations in the slab.
15. **DAMAGES**: Should the General Contractor or any associated subcontractor cause damage to any adjacent fixture or structure while completing or cleaning current construction, that contractor or subcontractor shall be responsible for repair or replacement of said damaged fixture or structure.
16. **INSURANCE**: The General Contractor shall purchase and maintain certifications of insurance with respect to workers compensation, public liability and property damage for the limits as required by law. The certificates shall name the client and Tenant Planning Services, Inc. as additional insured. The General Contractor and subcontractors performing work on-site shall conform to the Landlord's insurance requirements.
17. **GUARANTEE/WARRANTY**: The General Contractor shall enforce a specific and unconditional warranty on all materials, workmanship, equipment, fixtures and sub-assemblies subject to normal use and maintenance for a period not to exceed one (1) year from date of substantial completion. Said warranty shall not be exclusive of implied or specific warranties enforced by manufacturers and/or suppliers of aforementioned materials, equipment, fixtures and/or sub-assemblies.
18. **SECURITY**: The General Contractor shall be responsible for securing and controlling access to the job site during construction and for disconnecting power and lighting when not in use.
19. **INTERRUPTION OF SERVICES**: All work requiring dangerous, toxic, or noisy operations and installations which might affect the operation of the existing tenants shall be performed during non-business hours. Coordinate with Building Management.
20. **HAZARDOUS MATERIALS**: TPS has no knowledge of, and shall not be held liable for, any asbestos or other hazardous materials on the project site. Prior to commencing with the work on-site, it shall be the responsibility of the General Contractor to inspect and make a good faith effort to identify the presence of asbestos, toxic or other hazardous materials. Should hazardous materials be discovered at any time before or during construction, stop the work immediately and report to the Building Management for further instructions before proceeding.
21. **BUILDING RULES AND REGULATIONS**: The General Contractor shall be responsible for consulting with the Building Representative for rules and regulations governing the building and pertaining to deliveries, removal of materials and debris, use of building facilities, noise restrictions, protection of existing conditions, hours of operation, building access, etc.
22. **CLEANING**: The General Contractor shall clean the job site and adjoining areas during construction and upon completion. Cleaning includes, but is not limited to, vacuuming carpets; wet mopping floor tile and other resilient flooring; cleaning all glass, including interior side of exterior glazing, dusting and wiping clean all lint and soiled areas on doors, millwork, window coverings, baseboard, etc.; removing all construction debris, scraps, materials and equipment; and water seal all marble, granite and ceramic tile and grout.
23. **FIRE RESISTIVE STANDARDS**: Conform to the following:
    A. Materials and assemblies required to be fire resistive shall bear a label affixed to the product indicating fire resistive rating and testing agency with approved test certification number
    B. All blocking and nailer strips used in connection with fire resistive partitions shall be fire retardant wood as defined by the Building Code.
    C. All concealed wood shall be treated with an approved fire retardant.
    D. Fire ratings of existing materials and/or systems which may become damaged or modified due to the work shall be maintained with a fire rating equal to or greater than the existing rating.
    E. All pipe and conduit penetrations in fire rated partitions and floors/ceilings shall be sealed in accordance with a U.L. listed "fire stop" compatible with the material and fire rating required.
    F. Flame-spread: minimum ratings for flame spread shall be as follows:
    G. Enclosed vertical exit ways: Class I (0-25 F.S.I.)
    H. Other exit ways: Class II (26-75 F.S.I.)
    I. Rooms or areas: Class III (76-200 F.S.I.)
24. **ARCHITECTURAL WOODWORK**: Provide architectural woodwork as specified on the drawings. The "quality standards" of the architectural woodwork institute shall apply and hereby made a part of this document. All prefabricated work shall be economy grade. All other work shall be custom grade as defined by the quality standards of the AWI, unless noted otherwise.
25. **SURFACE PREPARATION**: Inspect existing conditions of all floor and wall surfaces for voids, holes, cracks, and other damages and make repairs. Grind and/or fill imperfections, fill holes, cracks, and other damages prior to installation.
26. **CLEARANCES**: The General Contractor shall verify ceiling height and clearances above ceiling to the underside of structure above for installation of ductwork and diffusers; conduits and junction boxes; fire sprinkler pipes and heads; and light fixtures. All work shall be coordinated by all trades to avoid interference with methods of installation. Notify TPS of conflicts immediately and prior to commencing with construction.
27. **FIRE SPRINKLER SYSTEM**: In buildings equipped with fire sprinkler systems, furnish all labor, materials, fixtures, trim, equipment and services necessary for the installation of a complete and properly functioning fire sprinkler system. All work shall conform to the following:
    A. Relocate and/or add fire sprinkler heads as required for new conditions as shown on the drawings.
    B. Rework and/or add to existing pipes, fittings, hangars and support as necessary for new sprinkler head locations.
    C. Design standards, materials and workmanship shall be compatible with existing conditions.
    D. Install new sprinkler head locations in the center of the ceiling board or section and symmetrical throughout rooms and open areas.
28. **PLUMBING SYSTEM**: Furnish all labor, materials, fixtures, trim, equipment and services necessary for the installation of a complete and properly functioning plumbing system. All work shall conform to the following:
    A. Refer to drawings for specific information pertaining to materials, fixtures, etc. scheduled as new and not contained herein.
    B. Re-use existing plumbing piping and/or fixtures and components where possible. Inspect and confirm existing conditions are within specifications.
    C. New materials shall be compatible with existing conditions, where possible.
    D. Provide fixtures with all anchors, supports, traps and trim, for a complete installation.
    E. Provide stop valves on all hot and cold water connections to fixturesF Caulk around all fixtures with silicone based caulking compound.
    G. Insiall all fixtures level and square with surrounding enclosures.
    H. Install escutcheons for all pipes exposed to view passing through walls, floors and ceilings.
    I. Provide templates or cut-outs of fixtures to the millwork subcontractor for cutting of openings.
    J. All materials and workmanship shall be in compliance with state and local codes and ordinances, and the Americans with Disabilities Act (ADA).
29. **HVAC SYSTEM**: Furnish all labor, materials, fixtures, trim, equipment and services necessary for the installation of a complete and properly functioning HVAC system. All work shall conform to the following:
    A. Standards: all standards and specifications established in the base building construction documents, or as evidenced in the existing conditions of construction shall govern, unless noted otherwise. All work shall be coordinated with the building maintenance manager. Refer to base building construction documents and specifications and existing conditions of system for equipment or materials not specified on the engineered drawings or contained herein. All materials and workmanship shall be in compliance with ASHRAE and SMACNA, state and local codes and ordinances, and the Americans with Disabilities Act (ADA).
    B. Repairs and replacement: the contractor shall verify proper operation of existing ductwork for breaks and leaks. In the event that the contractor has observed system failure or defects, notify the Owner's construction manager immediately for further direction. For bid purposes, it shall be assumed that all HVAC equipment and associated ductwork and components are in proper operating condition. Repairs or replacement of materials and workmanship shall be performed as a separate portion of the work.
    C. Abandoned equipment: all abandoned HVAC equipment and components within the area of construction shall be removed and all duct connections patched, capped and/or sealed.
    D. Fire dampers shall be installed in all ducts which penetrate fire resistive partitions (one-hour rated and above). Fire dampers shall be 100% free area design.
    E. Return air plenum: allow for transfer of air above Tenant demising partitions and spaces continuously and unobstructed to the building system return air shaft. Refer to engineered drawings (if provided) and detailed drawings for wall construction and opening size. During construction, the contractor shall place temporary filters over openings to the return air shaft. Remove filters upon completion of construction. Coordinate this work with the building maintenance manager.
    F. Thermostats: locate thermostats so as not to interfere with the occupants' furnishings and systems, avoiding locations in the middle of walls, in traffic areas, in file/supply rooms, etc.
    G. Air testing, adjusting, and balancing: adjust and balance terminal units, diffusers, dampers and registers to provide design condition air flow or to the air quantities shown on the drawings (if provided). Balance work shall be performed in accordance with NEBB standards by a certified contractor. Submit a balancing report to TPS. Calibrate and adjust all thermostats.
30. **FIRE/SMOKE ALARM SYSTEMS**: In buildings equipped with fire and/or smoke alarm systems, furnish all labor, materials, fixtures, trim, equipment and services necessary for the installation of a complete and properly functioning fire/smoke alarm system. All work shall conform to the following:
    A. Relocate and/or add fire alarms, smoke or heat detectors, strobe alarms, pull stations, remote indicator lights and other components of the system as required for new conditions of the space.
    B. Rework systems to be compatible with existing design standards and conditions.
    C. Locations and specifications of alarms shall comply with the Americans with Disabilities Act (ADA).
31. **ELECTRICAL SYSTEM**: Furnish all labor, materials, fixtures, trim, equipment and services necessary for the installation of a complete and properly functioning electrical system. All work shall conform to the following:
    A. Standards: all standards and specifications established in the base building construction documents, or as evidenced in the existing conditions of construction shall govern, unless noted otherwise. All work shall be coordinated with the building maintenance manager. Refer to base building construction documents and specifications and existing conditions of system for equipment or materials not specified on the engineered drawings or contained herein.
    B. All materials and workmanship shall be in compliance with the national electric code (NEC), state and local codes and ordinances, and the Americans with Disabilities Act (ADA).
    C. Repairs and replacement: the contractor shall verify proper operation of existing panels and switch-gear. In the event that the contractor has observed system failure or defects, notify the Owner's construction manager immediately for further direction. For bid purposes, it shall be assumed that all equipment and associated components are in proper operating condition. Repairs or replacement of materials and workmanship shall be performed as a separate portion of the work.
    D. Panels: provide new typed panel circuit directory for each panel affected.

Project Alternates

This plan is reviewed to IBC but the existing building is NOT converted to IBC. The construction type listed is UBC, Occupancy Group is IBC.

Architectural Casework Specifications

Construction:

- Cabinet Casework: All cabinet casework shall be 3/4" melamine covered particle board. All cabinet pieces shall be multiple dowelled, using aliphatic resin glue and machine clamped under pressure for a square secure fit.
- Toeboard Assemblies: Toe-board assemblies shall be assembled loose for base and tall units for field installation. Rubber base shall be furnished and installed by others. Toe-board material to be fabricated from mill option material.
- Cabinet Top and Bottom: Cabinet top and bottom shall be 3/4" melamine covered particle board. Bottoms of upper cabinets to be melamine to match cabinets interior. Base cabinets shall have a 4 5/8" wide stretcher on top for fastening counter top. Edge banding to match cabinet ends.
- Cabinet Ends: Ends shall be 3/4" thick melamine covered particle board interior. Exterior finished ends are to be high pressure laminate. Holes for adjustable shelf clips shall be 1 1/4" on center. Front edges to be banded with PVC. Color to match plastic laminate used on door faces.
- Adjustable Shelves: Shelving shall be 3/4" thick melamine covered particle board both sides. Front edges shall be banded with matching color PVC material.
- Cabinet Back: Backs shall be 1/4" thick melamine covered particle board, one face. Backs shall be rabbeted and securely glued into sides and bottom. A 1/2" hanger cleat is securely glued and nailed through cabinet back into top of wall cabinets and into back stretcher of base cabinets.
- Cabinet Doors and Drawer Fronts: Doors and drawer fronts shall be 3/4" thick particle board laminated on both faces with high pressure laminate. All edges shall be banded with PVC material coordinating with face color. Maximum door width to be 24".
- Drawers: Sides, back and subfront shall be 5/8" melamine covered particle board. Bottom shall be 1/4" melamine covered particle board to match cabinet interiors. Drawer sides are machined with a lock joint and glued and stapled together for secure fit. Bottom to be rabbeted into sides and subront.
- Counter Top: Cabinets shall have continuous one piece counter tops up to 12'-0" length constructed of 3/4" particle board with 1 1/2" steel edge. Tops over 12'-0" long shall be splined and joined together with metal fasteners.
- Fillers: All fillers shall be 3/4" particle board material covered on one face with high pressure laminate to match door and drawer fronts.

Materials:

- Plastic Laminate: Shall be used on all door and drawer faces. All laminate shall meet all NEMA standards. Colors to be selected from full range of colored laminates by Wilsonart, Formica or Nevamar. Refer to Finish Schedule.
- Counter Tops: Counter tops shall be horizontal grade high pressure laminate with a suitable backing sheet on a 45 pound industrial particle board.
- Casework Interiors: Covered 45 pound industrial particle board. Color of interiors shall be white, unless noted otherwise.
- Plastic Edging: Edge banding on all casework to be PVC to match plastic laminate on door and drawer faces. Edge banding on doors and drawer fronts to be PVC material coordination

Hardware:

- Hinges: Hinges shall be concealed steel type, chrome finish, 110°, with automatic spring (heavy duty).
- Pulls: Pulls for doors and drawers shall be a metal wire pull in satin aluminum, anodized
- Drawer Slides: Drawer suspension shall be of a side-bottom mounted white epoxy type with 3/4" extension. Load rating of 100 pounds. Files drawers shall be full extension
- Door Catches: Door catches shall be European style, self-closing concealed hinge with adjustment.
- Shelf Supports: Adjustable shelf supports shall be a nylon covered 5mm diameter steel pin for predrilled holes in cabinet ends.

CONTRACTOR TO PROVIDE SHOP DRAWINGS TO TPS FOR REVIEW AND APPROVAL PRIOR TO CONSTRUCTION.

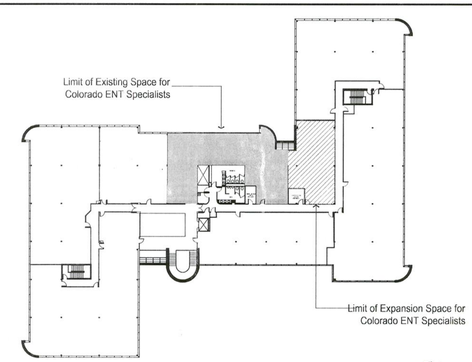

1 Proximity Plan
Level Two - Ste. 240

Not to Scale

North

Codes and Regulations

Building Profile

City/ County:	Aurora
Fire District:	Aurora
Construction Classification:	Type I-A IN SPK
Building Height / Levels:	2 Stories
Automatic fire sprinklers throughout	

Use and Occupancy

Occupant Name:	Colorado ENT Specialists
Occupant Use:	General Business Office
Occupancy Classification:	Business Group B

Tenant Area

	Existing	Expansion	Total
Approx. Useable SF:	2,731	1,479	4,210

Applicable Codes

2006	International Building Code
2006	International Mechanical Code
2006	International Plumbing Code
2008	National Electric Code
2006	International Fire Code

Interpretations

Occupancy Load Analysis

Room Name & Number	Function Per Table 1004.1.1	Floor Area (SF)	Occupants Per SF	Number of Occupants
Office, Exam Area	Office	4,155	÷ 100 =	42
Restrooms	Accessory	55	÷ 300 =	1
				TOTAL: 43

Means of Egress

	Required	Provided
Egress Width:	64" min.	96"
Number of Exits:	2 min.	3
Common Path of Travel:	100' max.	48'
Exit Access Travel Distance	300' max.	95'

Code violations that are found during inspection are required to be corrected. Permit issuance does not grant approval of a code violation per 2006 IBC 105.4.

Provide U.L. Class 2A10BC minimum rating fire extinguishers at a maximum 75'-0" travel distance prior to the Certificate of Occupancy issuance (2006 IFC Table 906.3(1) and 2002 NFPA 10)

Installation of interior alarms activated by the Fire Sprinkler water flow will be required per IFC 903.4.2. Approved audible devices shall be connected to every autotmatic sprinkler system.

Separate Life Safety drawings will be required for new systems or alterations to existing fire alarm systems. Plans must be shown with device locations, one line diagrams, battery calculations and product cut sheets. Approval of the plan set is required prior to fire alarm inspection.

CITY OF AURORA
BUILDING DIVISION
APPROVED AS NOTED RL
DATE APPROVED MAY 17 2010

Reviewed for Certificate of Occupancy. These documents do provide sufficent information for Final Inspection to be requested from all required city departments. ALL final inspections must be APPROVED.

City of Aurora Plan Review
Occ./Const. Type B / IN SPK
Code 06 IBC S.F. 4,155
RSN 535147
Permit Number 10-468729

10-468729

Approvals

☒ Issued For Construction
☐ Preliminary - Not Issued for Construction

Construction Document Approval

Construction work shall not proceed until the Owner and the intended occupant have given approval to these Construction Documents. Approval by these parties shall be interpreted as approval of the drawings, layout, equipment, scope of work, and all decisions regarding the quality as being acceptable to their operations, use of the space, furnishings, environmental relation, and any agreements between the Owner and the intended occupant.

Construction or start for initiation of construction authorized by the Owner from these Construction Documents, shall be interpreted by the Designer as approval in full of these Construction Documents by both the Owner and intended occupant.

- ☐ Approved - No Exceptions Taken
- ☐ Approved As Noted
- ☐ Approved As Noted - Resubmit
- ☐ Revise And Resubmit

Signature Date

Project Team

Designer/ Space Planner
Tenant Planning Services
450 Decatur Street
Denver, Colorado 80204
Contact: Michael Haider
Phone: 303.861.4800
Fax: 303.861.1621
email: michael@tenplan.com

Building Representative
CB Richard Ellis, Inc.
830 Potomac Circle, Ste. 230
Aurora, Colorado 80011
Contact: Nicole Budlong
Phone: 303.360.3178
Fax: 303.360.3014
email: Nicole.Budlong@cbre.com

Mechanical Engineer
Impact Engineering
7700 E Iliff Ave., Unit A
Denver, Colorado 80231
Contact: Brad Alm
Phone: 303.660.3535
Fax: 303.660.5999
email: bsaimpact@comcast.net

Electrical Engineer
Kazin Electrical Engineers
9364 Teddy Lane, Ste. 101
Lone Tree, CO 80124
Contact: Brian Kazin
Phone: 303-905-6989
Fax: 720-905-6989
email: bryan@kazinengineer.com

Drawing List

A0.0	Cover Sheet
A.01	Demolition Plan
A1.0	Construction Plan Partition Details
A2.0	Reflected Ceiling and Exiting Plan
A3.0	Power and Communications Plan
A4.0	Millwork and Finish Plan
A5.0	Detail Drawing
2P1.1	Plumbing Note, Legend, schedule
2P2.1	Plumbing Plan, Details
2M1.1	Mechanical General Notes & Symbols Legend
2M2.1	HVAC Plan Plumbing Plan Plumbing Fixtures Schedule
2E-1	Electrical Details and Symbols Legend
2E-2	Partial One-Line diagram Panel Schedules/Interior Lighting Application Worksheet Luminaire Schedule
2E-3	Electrical Lighting Plan Electrical Power Plan a

This plan was reviewed for adopted codes and NOT reviewed for compliance with ADA or FHA accessibility. Contact 800-949-4232 (ADA) and 303-894-7822x235 (FHA) for federal accessibility requirements that apply to your project.

Dates of Record

22 April 2010 Project Start Date
Issued On Issued For
30 Apr 10 Tenant Review & Approval; Pricing and Construction

TPS
TENANT PLANNING SERVICES
INCORPORATED
450 Decatur Street
Denver, Colorado 80204
(303) 861-4800
fax (303) 861-1621
www.tenplan.com

1400 Potomac
1400 Potomac
Aurora, Colorado
Level Two - Ste. 240

STATE OF COLORADO
KEVIN P. WELLS
12712
05/31/2010
LICENSED ARCHITECT

Colorado ENT Specialists
Remodel / Expansion

Sheet Contents — Cover Sheet
Project Team — MH/ IO
Project Number — 454006
Sheet Mark — **A0.0**

P:\454_Medical Center of Aurora Bldg 1_5\454006.02_Colorado ENT Specialists (Expansion)_1400 Potomac\drawings\construction documents\454006c.dwg, A0.0, 4/30/2010 1:43:33 PM, ishmaelo

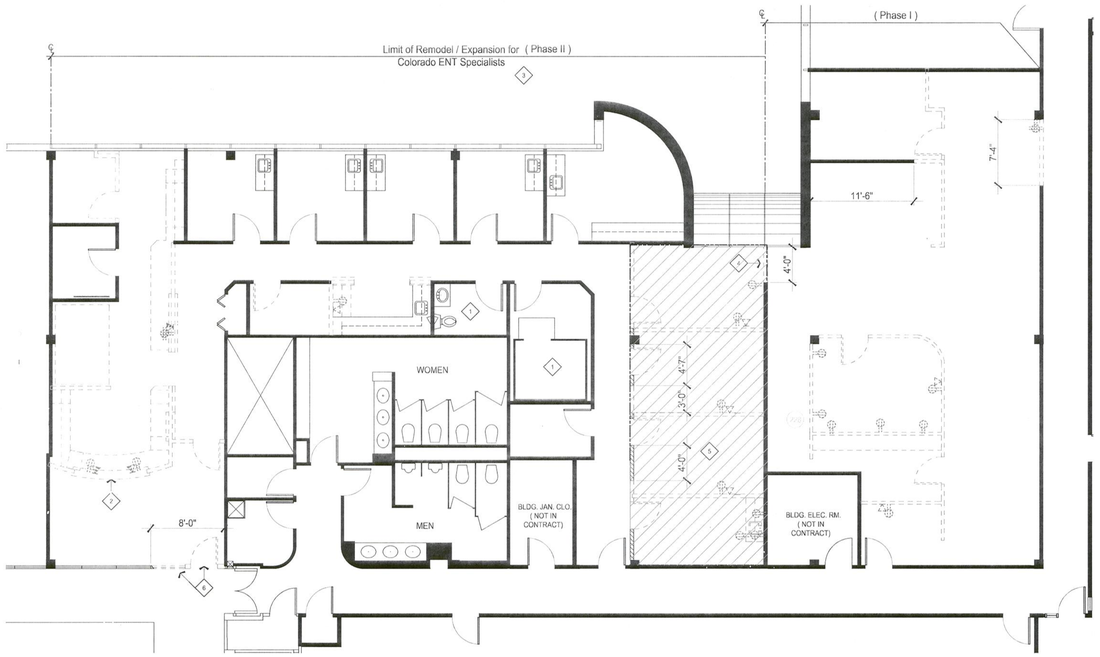

1 Demolition Plan

Level Two - Ste. 240

Scale: 1/8" = 1'-0"

0 5 10 20

North

PHASING NOTE:

G.C. SHALL REVIEW AND COORDINATE WITH TENANT/ TENANTS VENDORS, PROJECT MGR. ON SCHEDULING OF ALL PHASES LISTED PRIOR TO COMMENCEMENT OF WORK. INCLUDE IN BID PHASING OF WORK TO BE DONE AFTER BUSINESS HOURS.

PHASE II CONSTRUCTION SHALL HAVE MIN. OF (2) ADDITIONAL PHASES BASED ON MINIMUM AMOUNT OF AREA THAT CAN BE DONE AT ANY GIVEN TIME.

Sheet Plan Notes

1. Refer to General Notes for additional requirements.
2. **GENERAL DEMOLITION**: Demolish and remove all partitions, materials, and debris as shown on the drawings or specified otherwise herein. Removal as described shall be accomplished without storing excessive quantities of any material, rubbish, dirt, debris or waste of any kind within this demised area of construction or adjacent areas.
3. **FINISH TREATMENTS** scheduled to remain and be re-used are as follows: carpet, resilient flooring, base trim, wall treatments At limit of Exisitng / remodel Space.
4. **DISPOSAL**: All existing equipment, materials and fixtures not scheduled for re-use shall remain the property of the Owner. Coordinate with the Building Representative and comply with all regulations and/or requirements pertaining to removal, salvage and storage of materials demolished as scheduled.
5. **RE-USE**: Investigate condition of all materials scheduled for demolition and not re-used on this project. Document characteristics of each material or component and submit inventory statement to Building Representative. Include characteristics such as type, color, size, quantity, physical condition and make/model number, if possible.
6. **CLEAN AND REPAIR**: Verify condition of all materials scheduled for demolition and re-use where possible. Clean and/or repair materials as needed.
7. **PREPARATION**: Unless otherwise specified, remove all existing wall coverings, floor coverings and baseboard throughout and prepare existing surfaces for new finish treatments as scheduled. Refer to finish plans and/or schedules.
8. **PATCHING**: Remove all unused sleeves through the floor slab and fill/patch all penetrations.
9. **ELECTRICAL DEMOLITION**: Existing electrical and communications/ data wiring within partitions, raceways or above the ceiling and not scheduled for re-use shall be removed entirely, including hangars, supports, terminals, conduit and junctions from source to point of termination. Maintain circuit and/or transmission continuity to remaining devices, where necessary.
10. **PIPES AND CONDUITS**: All pipes and conduit in partitions scheduled for demolition shall be removed entirely when not scheduled for re-use.
11. **ABANDONED APPARATUS**: Abandoned electrical circuits, fixtures and devices discovert by the contractor and not scheduled for re-use shall be reported to the Building Representative for further direction.
12. **TELEPHONE/DATA REMOVAL**: Unless otherwise indicated on the drawings, remove of all existing telephone equipment or components not currently in use.

Sheet Keyed Notes

1. EXISTING TO REMAIN. No demolition work required in this area (UNO).
2. REMOVE demolish BUILT-IN RECEPTION DESK.
3. REMOVE FLOORCOVERING & BASE trim throughout (U.N.O.) per phases, and prepare to receive new specified finish treatments. Refer to Finish Treatments Schedule and phasing note.
4. Demising wall to be removed after Phase I has been completed.
5. Remove and/or rework existing ceiling tile and grid system at area shown dashed.
6. Remove existing door assembly and section of glass and prepare for relocation.

Demolition Legend

DEMO EXISTING. Partition, door assemblies, electrical devices and/or millwork to be demolished/ removed (typ.). Return all millwork/ fixtures and/or door assemblies, not re-used in this limit of construction, to Building Management. Cap and seal all unused plumbing (where applicable). Patch partitions and prepare to receive the scheduled finish treatments.

EXISTING PARTITION TO REMAIN.

EXISTING PARTITION TO BE REWORKED as Sound Insulated partition.

CITY OF AURORA
BUILDING DIVISION
APPROVED AS NOTED RL
DATE APPROVED MAY 17 2010

10-468729

TPS
TENANT PLANNING SERVICES
INCORPORATED
450 Decatur Street
Denver, Colorado 80204
(303) 861-4800
fax (303) 861-1621
www.tenplan.com

1400 Potomac
1400 Potomac
Aurora, Colorado
Level Two - Ste. 240

STATE OF COLORADO
KEVIN P. MILLS
B-1712
5/3/2010
LICENSED ARCHITECT

Colorado ENT Specialists
Remodel / Expansion

Dates of Record

20 Apr. 2010 Project Start Date

Issued On	Issued For
30 Apr 10	Tenant Review & Approval; Pricing and Construction

Project Team MH/ IO
Project Number 454006
Sheet Mark **A0.1**

P:\454_Medical Center of Aurora Bldg 1_5\454006.02_Colorado ENT Specialists (Expansion)_1400 Potomac\drawings\construction documents\454006c.dwg, A0.1, 4/30/2010 4:38:57 PM, ishmaelo

Door Schedule

Mark	TYPE	DOOR				FRAME			HARDWARE	REMARKS	Mark
		LEAF SIZE	MATERIAL	FINISH	FIRE RATING	MATERIAL	FINISH	FIRE RATING			
200	B	3'-0" x 8'-0" x 1 3/4"	Glass/Wood	frosted	20 Min.	Hollow Metal	Prefinished	20 Min.	1,12	Relocated Glass Inset Door assembly.	200
201	A	3'-0" x 7'-0" x 1 3/4"	Wood	Stained	None	Aluminum	Prefinished	None	3,5,7,8,10,12	New Interior Door Assembly.	201
202	A	3'-0" x 7'-0" x 1 3/4"	Wood	CLEAR	None	Aluminum	Prefinished	None	1	Existing Interior Door assembly to remain	202
203	A	3'-0" x 7'-0" x 1 3/4"	Wood	Stained	None	Aluminum	Prefinished	None	1	Existing Interior door assembly to remain	203
204	A	3'-0" x 7'-0" x 1 3/4"	Wood	Stained	None	Aluminum	Prefinished	None	1	Existing Interior door assembly to remain	204
205	A	3'-0" x 7'-0" x 1 3/4"	Wood	Stained	None	Aluminum	Prefinished	None	1	Existing Interior door assembly to remain	205
206	A	3'-0" x 7'-0" x 1 3/4"	Wood	Stained	None	Aluminum	Prefinished	None	1	Existing Interior door assembly to remain	206
207	A	3'-0" x 7'-0" x 1 3/4"	Wood	Stained	None	Aluminum	Prefinished	None	1	Existing Interior door assembly to remain	207
208	A	3'-0" x 7'-0" x 1 3/4"	Wood	Stained	None	Aluminum	Prefinished	None	1	Existing Interior door assembly to remain	208
209	A	3'-0" x 7'-0" x 1 3/4"	Wood	Stained	None	Aluminum	Prefinished	None	1	Existing Interior Door assembly to remain	209
210	A	3'-0" x 7'-0" x 1 3/4"	Wood	Stained	None	Aluminum	Prefinished	None	1	Existing Interior Door assembly to remain	210
211	A	3'-0" x 7'-0" x 1 3/4"	Wood	Stained	None	Aluminum	Prefinished	None	4,7,8,9,10	New and/or relocated Interior Door assembly to remain	211
212	A	3'-0" x 7'-0" x 1 3/4"	Wood	Stained	None	Aluminum	Prefinished	None	4,7,8,9,10	New and/or relocated Interior Door assembly to remain	212
213	A	3'-0" x 7'-0" x 1 3/4"	Wood	Stained	None	Aluminum	Prefinished	None	1	Existing Interior Door assembly to remain	213
214	A	PR 2'-6" x 7'-0" x 1 3/4"	Wood	Stained	None	Aluminum	Prefinished	None	17	New By-Pass door assembly	214
215	A	3'-0" x 7'-0" x 1 3/4"	Wood	Stained	None	Aluminum	Prefinished	None	4,7,8,9,10	New Interior door assembly.	215
216	A	3'-0" x 7'-0" x 1 3/4"	Wood	Stained	None	Aluminum	Prefinished	None	3,5,7,8,10,12	New Interior door assembly.	216
217	A	3'-0" x 7'-0" x 1 3/4"	Wood	Stained	None	Aluminum	Prefinished	None	3,5,7,8,10	New Interior Door Assembly	217
218	A	3'-0" x 7'-0" x 1 3/4"	Wood	Stained	None	Aluminum	Prefinished	None	4,5,7,8,10,12	New Interior Door Assembly	218
219	A	3'-0" x 7'-0" x 1 3/4"	Wood	Stained	None	Aluminum	Prefinished	None	3,5,7,8,10,12	New Interior Door assembly	219
220	A	3'-0" x 7'-0" x 1 3/4"	Wood	CLEAR	Stained	Aluminum	Prefinished	None	4,5,7,8,10	New interior Door Assembly	220
221	A	3'-0" x 7'-0" x 1 3/4"	Wood	CLEAR	Stained	Aluminum	Prefinished	None	4,5,7,8,10	New interior Door Assembly	221
222	A	3'-0" x 7'-0" x 1 3/4"	Wood	CLEAR	Stained	Aluminum	Prefinished	None	4,5,7,8,10	New interior Door Assembly	222
223	A	3'-0" x 7'-0" x 1 3/4"	Wood	CLEAR	Stained	Aluminum	Prefinished	None	4,5,7,8,10	New interior Door Assembly	223
224	A	3'-0" x 7'-0" x 1 3/4"	Wood	CLEAR	Stained	Aluminum	Prefinished	None	4,5,7,8,10	New interior Door Assembly	224
225	A	3'-0" x 8'-0" x 1 3/4"	Wood	Stained	20 Min.	Aluminum	Prefinished	20 Min.	3,5,7,8,10,12	New entry/exit door Assembly	225
226	A	3'-0" x 8'-0" x 1 3/4"	Wood	Stained	20 Min.	Aluminum	Prefinished	20 Min.	1	Existing Entry/exit Door Assembly to remain	226
227	A	3'-0" x 8'-0" x 1 3/4"	Wood	Stained	20 Min.	Aluminum	Prefinished	20 Min.	1	Existing Entry/exit Door Assembly to remain	227
228		3'-0" x 7'-0" x 1 3/4"								Doors by others	228
229	A	4 @ 1'-0" x 7'-0" x 1 3/4"	Wood	Stained	None	Wood	Stained	None	1	Existing Bi-Fold door assembly to remain	229
230		3'-0" x 7'-0" x 1 3/4"								Doors by others	230

Door And Frame Specifications

Wood Doors:
Wood veneer interior doors shall be 1-3/4" thick, 5-ply particle board core complying with CS 236, Type I, Density C, Class 1, and with AWI standard PC-5 construction, NWWDA I.S. 1.6 Type II adhesive, solid core, flush slab style. The General Contractor shall confirm the building standard specifications and match accordingly.

Door Frames:
Entry/Exit: Hollow metal, painted. The General Contractor shall confirm the building standard specifications and match accordingly.
Interior: Aluminum, Pre-painted. The General Contractor shall confirm the building standard specifications and match accordingly.

Door Type

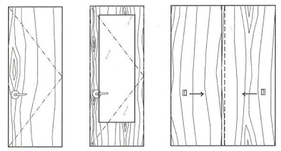

Type A
Standard
Swinging Door

Type B
French
Entry Door

Type C
Bypass Door

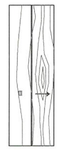

Type D
Bi-fold Door

Hardware Specifications

Hardware shall be manufactured by Sargent or approved equal (UNO) with building standard finish (US26D). Parts shall conform to the following:

1. Existing hardware to remain. Re-work for lever type handles as necessary
2. Entry / Exit Lockset: Building standard (min. 1" throw) with lever handle and push button lock in room interior.
3. Interior Lockset (min. 1" throw) w/ lever handle and push button lock in room interior.
4. Interior Passage Set: Building standard (min. 1" throw) with lever handle.
5. Privacy lock that has a push button on one side and an emergency release on the other side using a tool (usually a coin or screwdriver) in case of emergency, building standard.
6. Dust Proof Strike Plate: Building standard.
7. Hinges: Building standard, steel, full mortise plain bearing hinge, non-removable pin when scheduled at Entry/Exit doors.
8. Silencers: Building standard.
9. Gasketing: Building standard.
10. Wall stop: Building standard with US26D chrome finish with concave rubber bumper.
11. Floor stop: building standard., US26D chrome finish and rubber dome stop
12. Automatic door closer: Building standard.
13. Automatic flush bolts: Building standard.
14. Coordinators: Building standard.
15. Astragal: Building standard
16. Pocket Door Frame Kit: Including heavy duty tracks and rollers, adjustable floor anchors, door stop and finger pull with key locking mechanism.
17. Sliding Door Hardware: Mfr: CR Laurence -118" (stock size to be cut to desired length)
    - (catalog #K2943) top & bottom track;
    - (catalog #K2938) sliding panel kit consisting of
      - two roller assemblies,
      - two door stops,
      - one bottom guide and
      - two roller indents;
    - (catalog #K2900) one set of two door stops ;
    - (catalog #FP2148S) one brushed stainless 2¼"dia finger pull
16. The General Contractor shall provide separate cost to label all keys (locksets.) Coordinate with tenant and building management on labeling numbers.

Provide lever or other approved hardware on all new or relocated doors per 2003 ANSI A117.1.

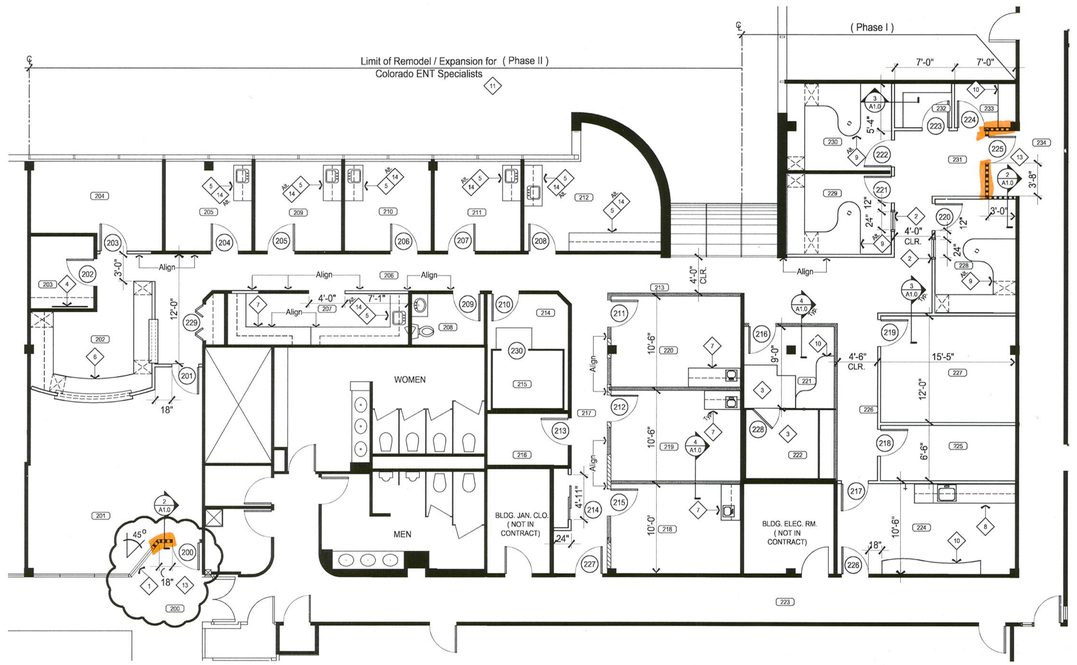

1 Construction Plan

Level Two - Ste. 240

Scale: 1/8" = 1'-0"

0 5 10 20

North

Sheet Plan Notes

1. Refer to General Notes for additional requirements.
2. **All DOOR ASSEMBLIES** shown on the drawings and not referenced to the door schedule are existing to remain (unless noted otherwise).
3. **DOOR ASSEMBLIES**: Re-use existing door assemblies and/or components where possible. Inspect, make repairs to, and clean existing assemblies or components to like new conditions.
4. **DOOR ASSEMBLIES**: Provide new door assemblies and/or components as specified on the drawings. Door frames shall be securely fastened in place and the entire assembly shall be installed plumb and square with minimum diagonal distortion of 1/8". Undercut doors as needed for specified floor coverings.
5. **INSULATION**: Provide insulation in walls and above suspended ceiling if indicated on the drawings. Insulation shall conform to the following:
   A. Sound insulation in walls shall be unfaced fiberglass, 16" to 24" wide to correspond with stud width.
   B. Thermal insulation in walls shall be Kraft faced fiberglass, 16" to 24" wide, with R-13 thermal value.
   C. Ceiling insulation shall be foil faced fiberglass, 24" wide, for use in return air plenums.
6. **BACKING/BLOCKING**: Provide solid wood blocking in partitions for plumbing fixtures, door stops, etc., and as indicated on the drawings. Plywood backing may be used for shelving. Framing material for blocking and nailers, etc., shall be western douglas fir or hemlock.
7. **PARTITIONS**: Conform to the following:
   A. Partitions shall be erected plumb and true.
   B. Drywall partitions and joints shall be taped and finished smooth and prepared for specified finish treatment. Coat vertical joints from floor to ceiling for additional substrate to the base trim.
   C. Skim coat existing partitions as needed.
   D. All exposed corners shall be fitted with metal corner bead and top of walls at underside of suspended ceilings shall be straight and true.
   E. Provide "kickers" or metal stud support from the top of the partition to the underside of structure above for long runs and at all jambs of openings for door assemblies and at any glazed opening within 36" of the strike side of swinging doors.
8. **EXISTING LIFE SAFETY SYSTEMS**: Modify (fire alarm/smoke detection) on a design-build basis. Conform to these drawings and documents and as required for obtaining a building permit. Refer to General Notes.

Wall Legend

EXISTING PARTITION TO REMAIN.

3/A1.0 — ***NEW STANDARD INTERIOR PARTITION.*** Non-rated assembly. 25 gauge 3⅝" metals studs at 24" o.c. with 5/8" gypsum board each side floor to finished ceiling. Refer to Section Detail.

5/8" Gypsum Board each side — Metal studs at 24"o.c. Typ.

2/A1.0 — ***NEW CORRIDOR PAPTITION.*** 60-Minute Fire Resistive rated assembly. 20 gauge 3⅝" metal studs at 24" o.c. floor to structure above with 5/8" type 'X' gypsum board floor to structure above and 3½" fiberglass sound attenuation batts floor to finished ceiling height. Match Building Standard. Refer to Section Detail.

5/8" type 'X' gypsum board each side floor to structure above. — Metal studs at 24"o.c. Typ. — Sound attenuation batts from floor to finished ceiling height.

EXISTING PARTITION TO BE REWORKED as a Sound Attenuated Partition: (see below)

4/A1.0 — ***NEW SOUND ATTENUATED PARTITION.*** Non-rated assembly. 20 gauge, 3⅝" metal studs at 24" o.c. with 5/8" gypsum board each side and 3½" fiberglass sound attenuation batts floor to finished ceiling. Match Building Standard. Refer to Section Detail.

5/8" Gypsum Board each side floor to finished ceiling. — Metal studs at 24"o.c. Typ. — Sound attenuation batts from floor to finished ceiling height.

Match existing construction. Field verify existing construction for extent of work and verify match to these partition types.

PHASING NOTE:

G.C. SHALL REVIEW AND COORDINATE WITH TENANT/ TENANTS VENDORS, PROJECT MGR, ON SCHEDULING OF ALL PHASES LISTED PRIOR TO COMMENCEMENT OF WORK. INCLUDE IN BID PHASING OF WORK TO BE DONE AFTER BUSINESS HOURS.

PHASE II CONSTRUCTION SHALL HAVE MIN. OF (2) ADDITIONAL PHASES BASED ON MINIMUM AMOUNT OF AREA THAT CAN BE DONE AT ANY GIVEN TIME.

Room Schedule

200	Public Corridor	221	New Audio Office
201	Entry Area	222	New Audio Booth
202	Reception	223	Public Corridor
203	Storage room	224	Break room
204	Office	225	Storage room
205	Tenant passage	226	Tenant passage
206	Nurse Station	227	Doctor's Office
207	Nurse Station	228	Office
208	Existg. Rest Rm.	229	Office
209	Existg. Exam Rm.	230	Office
210	Existg. Exam Rm.	231	Tenant passage
211	Existg. Exam Rm.	232	Storage
212	Procedure room	233	Work room
213	Tenant passage	234	Public Corridor
214	Existg. Office		
215	Existg Audio Booth		
216	Exist'g. Office		
217	Tenant passage		
218	Exam Room		
219	Exam room		
220	Procedure room		

Sheet Keyed Notes

1. RELOCATE(D) GLAZING. Remove existing full height Tempered 45-Min. rated glazing assembly at "Old Location" and re-install at "New Location." Match original construction method and materials. Replace any components which cannot be salvaged. Field verify existing conditions for extent of work.
2. NEW SIDELITE assembly. Refer to detail(s).
3. NEW AUDIO BOOTH with Ramp. Not in contract provided by Tenant vendor.
4. EXISTING EQUIPMENT BACKBOARD to remain. Paint to match partition.
5. EXISTING MILLWORK to remain. Clean and repair to "like new" conditions as possible.
6. NEW BUILT-IN DESK. Refer to Millwork plan.
7. NEW BASE & WALL CABINETS. Refer to Millwork plan.
8. NEW MILLWORK & PLUMBING. Refer to Millwork plan and Plumbing Engineering Drawings.
9. NEW MILLWORK / WORKSURFACE. Refer to Millwork plan. price Separately as an Alternate.
10. NEW COUNTERTOP. Refer to Millwork plan.
11. Provide SEPARATE PRICING for
    • moving/ relocating Tenant's furniture
    • phasing of areas
    • all work done after normal business hours. Coordinate w/ Building Management &Tenant.
12. EXISTING WINDOW assembly, in wrapped gypsum board opening, to remain.
13. REWORK PUBLIC AREA FINISH TREATMENTS. Repair, replace and/or provide new finish treatments to match existing at this public area as necessary due to remodel work. Coordinate specifications with Building Management. Price Separately.
14. In Lieu of Existing Millwork to remain, price separately to furnish and install new millwork and plumbing fixtures. Re-use existing plumbing as necessary.

CITY OF AURORA
BUILDING DIVISION
APPROVED AS NOTED RL
DATE APPROVED MAY 17 2010

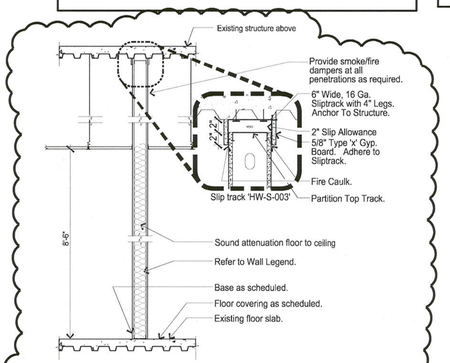

2 Section: Partition

One-Hour Fire-Rated Partition 'UL #465'

Scale: 1/2" = 1'-0"

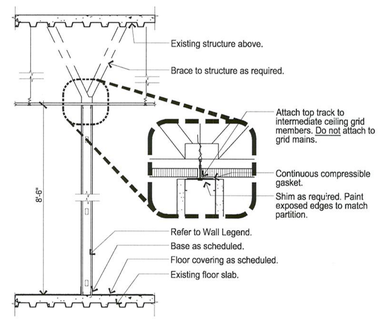

3 Section: Partition

Typical Standard Interior Partition

Scale: 1/2" = 1'-0"

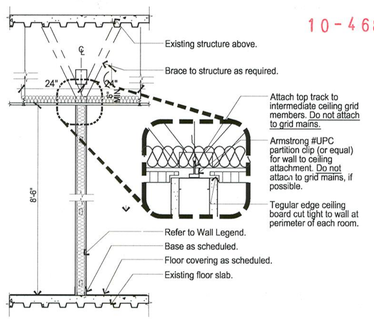

4 Section: Partition

Typical Sound Attenuating Partition

Scale: 1/2" = 1'-0"

10-468729

TPS
TENANT PLANNING SERVICES
INCORPORATED
450 Decatur Street
Denver, Colorado 80204
(303) 861-4800
fax (303) 861-1621
www.tenplan.com

1400 Potomac
1400 Potomac
Aurora, Colorado
Level Two - Ste. 240

STATE OF COLORADO
KEVIN P. MILLS
B-1712
5/13/2010
LICENSED ARCHITECT

Colorado ENT Specialists
Remodel / Expansion

Dates of Record

22 April 2010 **Project Start Date**

Issued On	Issued For
30 Apr 10	Tenant Review & Approval; and Construction Bid

Sheet Contents: Cover Sheet

Project Team: MH/ IQ
Project Number: 454006
Sheet Mark: **A1.0**

P:\454_Medical Center of Aurora Bldg 1_5\454006.02_Colorado ENT Specialists (Expansion)_1400 Potomac\drawings\construction documents\454006c.dwg, A1.0, 5/10/2010 3:01:06 PM, ishmaelo

Sheet Plan Notes

1. Refer to General Notes for additional requirements.
2. The **SUSPENDED CEILING SYSTEM** is existing-to-remain throughout (unless noted otherwise), and shall be refurbished as follows:
   A. Suspended grid and components shall be cleaned or touched-up where soiled or discolored. Repair and/or replace damaged members. Caulk fill all holes. Match existing conditions.
   B. Clean, touch-up and/or replace soiled, discolored and damaged ceiling tiles. Replacement ceiling board shall be per specifications or building standards.
   C. Inspect grid suspension system and adjust ceiling plane, if necessary. Provide additional support where necessary.
   D. Replacement of materials, when required, shall occur consistently and completely in individual rooms and/or spaces for uniformity of appearance and aesthetics.
   E. Installation of tiles shall be individually cut-in at rooms or areas. Refer to drawings for specific requirements.
   F. All tiles shall be seated tight, level and true within the grid system.
4. **CEILING HEIGHT**: Refer to construction details for ceiling construction and interface with partitions. Ceiling height: 8'-6" AFF
5. **FIXTURES AND DEVICES**: Provide and/or relocate light fixtures, switches, and controls indicated on the drawings.
   C. Refer to Symbols Legend for fixture type and/or specification.
   D. Install and support fixtures from the structure in accordance with the code.
   E. Install all new light fixtures, sprinkler heads, diffusers, speakers, detectors, alarms, etc. in the center of the ceiling board or section and symmetrical throughout rooms and open areas, unless noted otherwise.
   F. The contractor shall field verify all proposed locations of light fixtures prior to commencing construction and shall notify TPS of any discrepancies and/or conflicts with existing installations.
   G. Existing fixtures scheduled to remain or be re-used shall be inspected and reworked, if necessary. Fixtures shall be cleaned, including lenses and lamps. Defective ballasts and other components shall be replaced. Match existing conditions.
   H. All light fixtures, exit signs, and switch devices shown throughout are to be assumed existing to remain (unless noted otherwise).
      'R' indicates relocated fixture or device
      'N' indicates new fixture or device
6. **Unless noted otherwise, all light fixtures and devices are dimensioned to the centerline of the fixture.**
7. **EXISTING FIRE SPRINKLER HEADS** mounted in the ceiling may be shown on the drawings, and are intended for informational purposes only. Drawings shall be submitted by the general contractor for any new work required.
8. **MODIFY EXISTING FIRE SPRINKLER SYSTEM** on a design-build basis. Conform to these drawings and documents and as required for obtaining a building permit. Refer to General Notes.
9. **MODIFY EXISTING HVAC SYSTEMS** on a design-build basis. Conform to these drawings and documents and as required for obtaining a building permit. Refer to General Notes.

Symbols Legend

Ceiling Mounted Fixtures\ Devices

- Building Standard 2x4 fluorescent light fixture
- Building Standard 2x2 fluorescent light fixture
- New Building Standard fluorescent light fixture
- comoact fluorescent horizontal downlight fixture
- Transfer fan assembly
- Existing as-built sprinkler head location
- Building Standard Exit Sign. Green letters on white face. Battery backup. Shade indicates face(s) and arrows (if any) indicate direction.

Wall Mounted Fixtures\ Devices

- Building Standard single pole switch
  Special function switches:
  "D" = dimable switch and ballast
  "3" = Three-way operation
  [lower case letters] indicate circuiting when necessary for clarification

Symbols shown shaded and/or dashed indicate devices to be removed/ demolished

"N" : new fixture/ device to be installed at this location.
"E" : existing fixture/ device to remain.
"R" : relocated fixture/ device to be installed in this location.

Refer to Engineering Drawings for complete specifications

Room Schedule

200	Public Corridor	221	New Audio Office
201	Entry Area	222	New Audio Booth
202	Reception	223	Public Corridor
203	Storage room	224	Break room
204	Office	225	Storage room
205	Tenant passage	226	Tenant passage
206	Nurse Station	227	Doctor's Office
207	Nurse Station	228	Office
208	Existg. Rest Rm.	229	Office
209	Existg. Exam Rm.	230	Office
210	Existg. Exam Rm.	231	Tenant passage
211	Existg. Exam Rm.	232	Storage
212	Procedure room	233	Work room
213	Tenant passage	234	Public Corridor
214	Existg. Office		
215	Existg Audio Booth		
216	Existg. Office		
217	Tenant passage		
218	Exam Room		
219	Exam room		
220	Procedure room		

Sheet Keyed Notes

1. NEW SUSPENDED CEILING. Provide New, rework suspended grid and acoustical tile system at Public Corridor areas. Match existing corridor ceiling. Price separately Ceiling work at this area.
2. NEW SUSPENDED CEILING. Provide grid and acoustical tile system Shot independently as shown in this area. Refer to Sheet Plan Notes for specifications and installation height. Refer to plan for "Start" location.

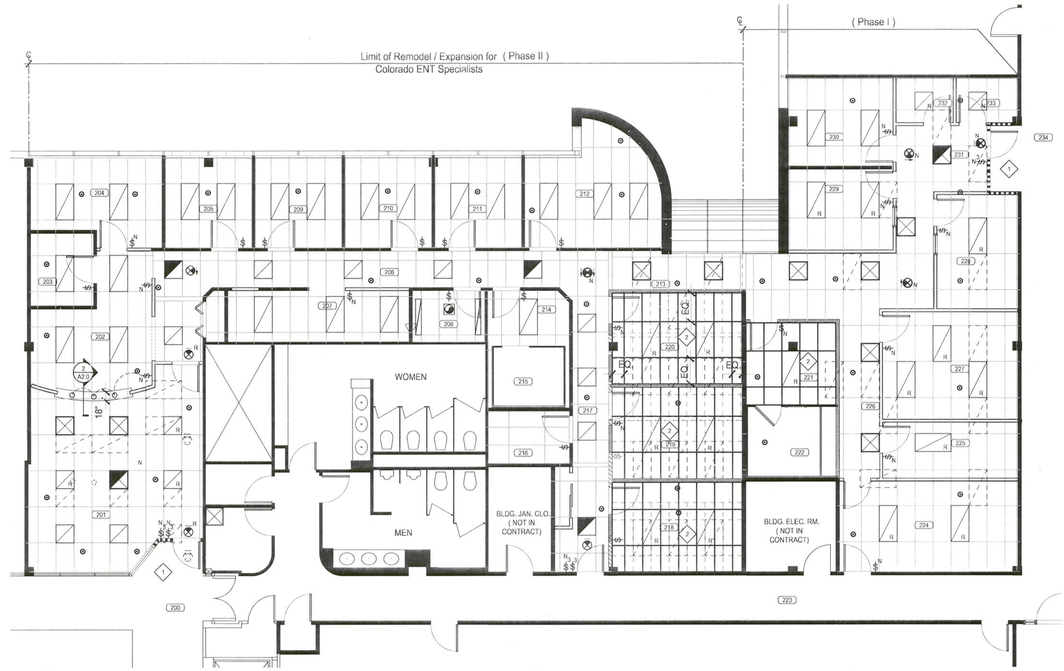

1 Reflected Ceiling Plan
Level Two - Ste. 240
Scale: 1/8" = 1'-0"
0 5 10 20

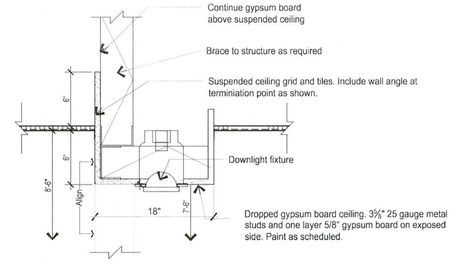

2 Section: Soffit
at Reception
Scale: 1½" = 1'-0"

PHASING NOTE:

G.C. SHALL REVIEW AND COORDINATE WITH TENANT/ TENANTS VENDORS, PROJECT MGR. ON SCHEDULING OF ALL PHASES LISTED PRIOR TO COMMENCEMENT OF WORK. INCLUDE IN BID PHASING OF WORK TO BE DONE AFTER BUSINESS HOURS.

PHASE II CONSTRUCTION SHALL HAVE MIN. OF (2) ADDITIONAL PHASES BASED ON MINIMUM AMOUNT OF AREA THAT CAN BE DONE AT ANY GIVEN TIME.

CITY OF AURORA
BUILDING DIVISION
APPROVED AS NOTED RL
DATE APPROVED MAY 06 2010

10-468729

TPS
TENANT PLANNING SERVICES INCORPORATED
450 Decatur Street
Denver, Colorado 80204
(303) 861-4800
fax (303) 861-1621
www.tpsplan.com

1400 Potomac
1400 Potomac
Aurora, Colorado
Level Two - Ste. 240

STATE OF COLORADO
KEVIN P. KNOLLS
13-1712
6/3/2010
LICENSED ARCHITECT

Colorado ENT Specialists
Remodel / Expansion

Dates of Record

20 Apr. 2010 Project Start Date

Issued On	Issue For
30 Apr 10	Tenant Review & Approval; Pricing and Construction

Project Team MH/ IO
Project Number 454006
Sheet Mark **A2.0**

P:\454_Medical Center of Aurora Bldg 1_5\454006.02_Colorado ENT Specialists (Expansion)_1400 Potomac\drawing\construction documents\454006c.dwg, A2.0, 4/30/2010 4:35:08 PM, ishmaelo

Sheet Plan Notes

1. **Refer to General Notes for additional requirements.**

2. **PROVIDE ELECTRICAL POWER AND COMMUNICATIONS OUTLETS**, receptacles and devices indicated on the drawings.
   A. Refer to symbols legend for device type and/or specification.
   B. Install in locations as shown on the drawings.
   C. All power and communications receptacles provided for general purposes shall be installed at 18" from the finished floor to the center of the device (unless noted otherwise).
   D. Unless noted otherwise, all electrical power and communications outlets, receptacles and devices are dimensioned to the centerline of the device.
   E. Scale drawings for locating outlets not dimensioned on the drawings, allowing for not more than 8" tolerance either direction.
   F. All rectangular outlet boxes shall be installed with the long side in the horizontal position, except above counters and cabinets, or otherwise shown on the drawings.
   G. All rectangular switch and control boxes for lighting and other devices shall be installed with the long side in the vertical position, recessed flush with the wall surface and at 48" above finished floor to the center of the control unit (unless noted otherwise).
   H. Outlets shall not be installed back to back in sound insulated partition.
   I. All outlets indicated to be installed in existing partitions or furred partitions or columns shall be cut-in or recessed flush with wall surface. Furr and/or remove sheathing, if necessary.
   J. All electrical power and communications outlets, receptacles and devices shown throughout are new (unless noted otherwise).
      'E' indicates existing fixtures/device to remain
      'R' indicates relocated fixture or device

3. **NEW WIRING DEVICES** shall be specification grade; 15 amp. For general application, 20 amp. or greater for dedicated circuits and as required by circuit load. Provide smooth nylon cover plates for all outlets and devices. Color: match existing

4. **COMMUNICATION/DATA OUTLETS** shall conform to the following:
   A. Communication/data outlets shall consist of an opening in the sheathing with a single gang plaster ring and pullwire with plastic bushing up through wall to the ceiling plenum.
   B. When inaccessible by the method described above or when indicated on the drawings, include one (1) -3/4" conduit (min.) & 2" deep single gang box for outlet.
   C. Where communications/data outlets are located in low height partitions or mounted in floors, a maximum of three (3) outlets shall be fed from one (1) - 3/4" conduit.
   D. All communication/data cables, plates, jacks, and final connections shall be provided under a separate contract by the Tenant. All materials shall be installed in compliance with all codes and ordinances and these documents. Cables and fittings installed above the ceiling in the return air plenum shall be rated and labeled for use in plenums. Cables shall be supported from the structure, independent of other support hangers.

5. **MODIFY EXISTING ELECTRICAL SYSTEMS** on a design-build basis. Conform to these drawings and documents and as required for obtaining a building permit. Refer to General Notes.

Symbols Legend

Ceiling Mounted Fixtures/ Devices

Wall Mounted Fixtures/ Devices

- Duplex electrical receptacle & face plate
- Quadplex electrical receptacle & face plate
- Duplex electrical receptacle & face plate on dedicated circuit
- Quadplex electrical receptacle & face plate on dedicated circuit
- Single gang J-box with RJ-11 telephone outlet and faceplate
- Single gang J-box w/ data outlet & faceplate
- Combination telephony/ data outlet rough-in (3/4"/2 conduit) w/ double gang J-box and single gang plaster ring with pull string to above finished ceiling.
- Existing J-box. Provide blank face plate
- Flush, in-partition double-gang J-box for systems furniture interface. Coordinate conduit requirements and final location with Tenant's furniture vendor prior to rough-in. General Contractor to make final electrical connections.
  'P' = power
  'C' = phone / data communications

"E" : existing fixture/ device to remain.
"R" : relocated fixture/ device to be installed in this location.

Refer to Engineering Drawings for complete specifications

Room Schedule

200	Public Corridor	221	New Audio Office
201	Entry Area	222	New Audio Booth
202	Reception	223	Public Corridor
203	Storage room	224	Break room
204	Office	225	Storage room
205	Tenant passage	226	Tenant passage
206	Nurse Station	227	Doctor's Office
207	Nurse Station	228	Office
208	Existg. Rest Rm.	229	Office
209	Existg. Exam Rm.	230	Office
210	Existg. Exam Rm.	231	Tenant passage
211	Existg. Exam Rm.	232	Storage
212	Procedure room	233	Work room
213	Tenant passage	234	Public Corridor
214	Existg. Office		
215	Existg Audio Booth		
216	Exist'g. Office		
217	Tenant passage		
218	Exam Room		
219	Exam room		
220	Procedure room		

Sheet Keyed Notes

1. Provide NEW JUNCTION BOX IN CEILING for Tenant furnished and installed Audio sound booth. Match existing. Refer to engineering plans.
2. G.C. shall furnish and Install new junction box in ceiling for surgical light fixture. Refer to Elec. engg. plans. provide allowance of $1,500. for light fixture.

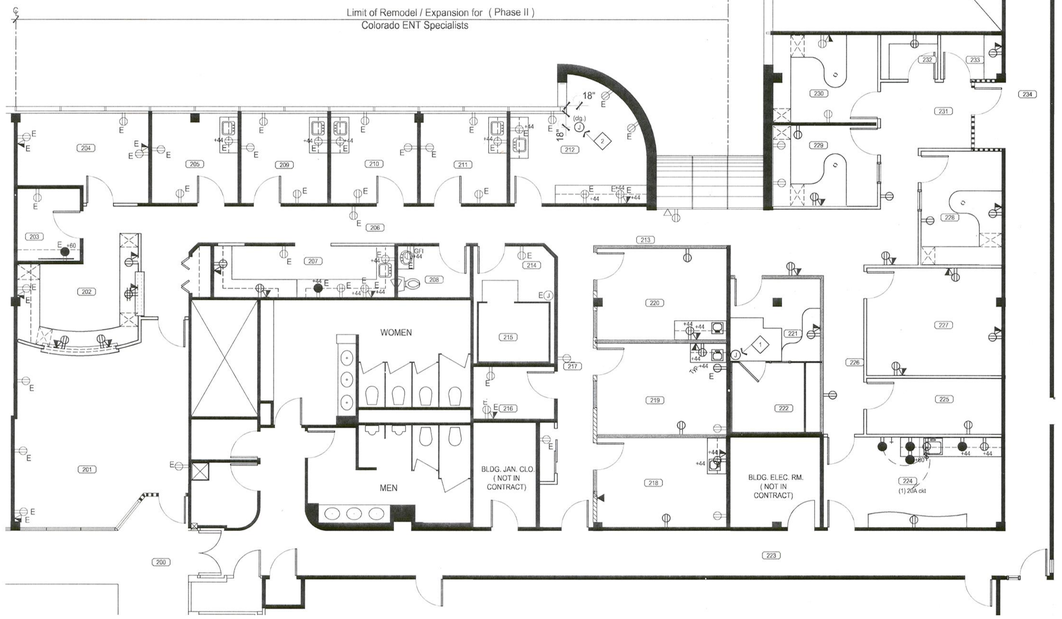

1 Power & Communications Plan
Level Two - Ste. 240
Scale: 1/8" = 1'-0"

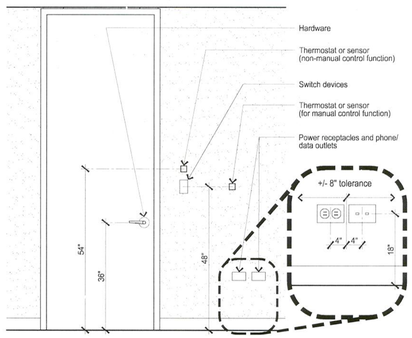

2 Elevation: Typical Heights
Hardware and Electrical devices
No Scale

PHASING NOTE:

G.C. SHALL REVIEW AND COORDINATE WITH TENANT/ TENANTS VENDORS, PROJECT MGR. ON SCHEDULING OF ALL PHASES LISTED PRIOR TO COMMENCEMENT OF WORK. INCLUDE IN BID PHASING OF WORK TO BE DONE AFTER BUSINESS HOURS.

PHASE II CONSTRUCTION SHALL HAVE MIN. OF (2) ADDITIONAL PHASES BASED ON MINIMUM AMOUNT OF AREA THAT CAN BE DONE AT ANY GIVEN TIME.

CITY OF AURORA
BUILDING DIVISION
APPROVED AS NOTED RL
DATE APPROVED MAY 17 2010

10-468729

TPS
TENANT PLANNING SERVICES INCORPORATED
450 Decatur Street
Denver, Colorado 80204
(303) 861-4800
fax (303) 861-1621
www.tenplan.com

1400 Potomac
1400 Potomac
Aurora, Colorado
Level Two - Ste. 240

STATE OF COLORADO
KEVIN P. MILLS
B-1712
5/3/2010
LICENSED ARCHITECT

Colorado ENT Specialists
Remodel / Expansion

Dates of Record
20 Apr. 2010 Project Start Date

Issued On	Issued For
30 Apr 10	Tenant Review & Approval, Pricing and Construction

Project Team MH/ IO
Project Number 454006
Sheet Mark **A3.0**

P:\454_Medical Center of Aurora Bldg 1_5\454006.02_Colorado ENT Specialists (Expansion)_1400 Potomac\drawings\construction documents\454006c.dwg, A3.0, 4/30/2010 4:34:27 PM, ishmaelo

General Notes

Finish Treatment Schedule

1. **GENERAL FINISH TREATMENT NOTES**:
   - A. Coordination: finish treatment subcontractors and installers shall coordinate with other trades for applications affecting other tradework, especially millwork, etc.
   - B. Unless noted otherwise, all floor coverings, baseboard, and floor preparation shall be the responsibility of the General Contractor, including removal of existing materials.
   - C. Installation: all finish treatments shall be installed or applied in strict accordance with the manufacturer's written specifications and the drawings.
   - D. Protection: protect all surfaces, doors, hardware, outlet plates, etc. From spills, splatters and overspray of paint, drywall compound, adhesive and other materials.
   - E. Preparation: field measure each space to receive finish treatment as a basis of supplying, cutting and seaming material. Do not scale the drawings or calculate sizes from dimensions shown.
   - F. Surfaces: all surfaces shall be properly prepared prior to installation of material including but not limited to priming of walls to receive paint, sizing of walls to receive wall covering, patching/filling holes and depressions, etc.
   - G. Surface texture: unless noted otherwise, all drywall finish shall be smooth.
2. **CARPET INSTALLATION**: carpet installation shall comply with the workmanship guidelines as published by the American Carpet Institute (latest edition), and in strict accordance with the manufacturer's written specifications, and shall also conform to the following:
   - A. Where carpet seams occur in doorways, locate seam beneath center of door slab.
   - B. Furnish and install resilient type reducer strip (saddle) where resilient floor coverings abutt carpet. See drawing for color.
   - C. Coordinate installation for uniformity where dye-lot variations may occur in material.
3. **WALLCOVERING INSTALLATION**: wall covering shall be installed or applied in complete accordance with the manufacturer's written specifications and shall also conform to the following:
   - A. Wrap all device cover plates with wall covering only on walls scheduled to receive wall covering (match wall finish).
   - B. Furnish and install "J" metal polished aluminum edge cap (mudded in) at corners where wall coverings terminate and ends are exposed.
4. **PAINT**: paint shall be installed or applied in strict accordance with the manufacturer's written specifications and as recommended by "The Modern Guide To Painting Specifications" (latest edition) and shall also conform to the following:
   - A. Surfaces scheduled for painting shall receive no less than two coats of paint (3.0 mil, min. Thickness).
   - B. All materials shall be evenly applied avoiding runs, sags, flashing or splotching. All coats shall be allowed to dry thoroughly prior to application of succeeding coats. Where necessary, provide masking to avoid inadvertent applications.
   - C. Unpainted gypsum board and drywall shall be primed prior to painting. The primer may be tinted with the paint color only as recommended by the paint manufacturer.
   - D. At the completion of the job and after installation of the floor covering, touch-up paint all areas as required. Blend paint touch-up in with existing for a consistent and uniform appearance.
5. **WINDOW COVERINGS**: unless noted otherwise, window coverings shall be the responsibility of the General Contractor and shall conform to the following:
   - A. When specified on the drawings as new or for replacement, provide new window coverings as specified.
   - B. When specified on the drawings for re-use of existing window coverings, the General Contractor shall inspect existing conditions of material and operation and make necessary repairs or replace to match existing. Replace window coverings if missing. Upon completion of job, clean material, hardware and housings thoroughly, including both sides of window covering material.

Finish Treatment Schedule

	Mark	Material	Manufacturer	Product/ Number	Color/ Number	Remarks (Note: all surfaces MUST BE clean, dull and dry before coating are applied)
Wallcoverings		Interior Latex Drywall Primer	Sherwin-Williams Health Spec Low Odor Primer	B28W2200	White	Primer for all new exposed gypsum board surfaces throughout Limit of Remodel / Expansion.
	P 1	Interior Latex Satin Egg Shell Paint	Sherwin-Williams ProMar200 Latex Eg-Shel	B20W2200	TBD	Paint all gypsum board partitions throughout Limit of Construction / Remodel / Expansion (UNO). Provide two coats (minimum) at all new exposed gypsum board surfaces.
	P 2	Interior Latex Semi-Gloss Paint	Sherwin-Williams ProMar200 Latex Semi-Gloss	B31W2200	TBD	Paint for wood doors, wood frames and wood shelving.
	P 3	Interior Latex Gloss Finish Paint	Sherwin-Williams ProMar200	B21W200	TBD	Paint for all exposed gypsum board surfaces at restrooms.
		DTM Primer Finish	Sherwin-Williams	B66W1		Primer for new steel, galvanized or aluminum substrate.
	P 4	Interior Alkyd Semi-Gloss Finish Paint	Sherwin-Williams ProClassic	B34 Series	TBD	Paint for exterior metal heat convectors, elevator doors and frames, hollow metal steel doors and frames.
Floorcovering	A B1	Carpet	TBD	TBD	TBD	New carpet to be installed throughout Limit of Construction / Remodel / Expansion (UNO). Glue down direct. Provide Allow. $22.00/yd Installed.
	B B2	12' X 12" Floor Tile	Slate	TBD	TBD	New tile to be installed at Main Entry as shown . Include Schluter strip at carpet seams. Grout color: TBD.
	C B1	Vinyl Sheet floorcovering	Techdesign, Duration 2	6'-6" Length	T.B.D.	New VCT Sheet Flooring where indicated. Include resilient type reducer strip at carpet seams.
Base Trim	B1	4" Rubber Base	Johnsonite	TBD	TBD	Install straight vase at all areas of broadloom carpet and coved base at all areas of carpet tiles and hard surface flooring throughout Limit of Remodel / Expansion (UNO).
Millwork	PL 1	Plastic Laminate	Wilsonart	TBD	TBD	New plastic laminate surfaces at all new countertop and backsplash surfaces (UNO). Refer to detail drawings.
	PL 2	Plastic Laminate	Wilsonart	TBD	TBD	New plastic laminate surfaces at all vertical surfaces (UNO). Refer to detail drawings.

The General Contractor shall verify that all finish treatments specified above prior to order/ installation.

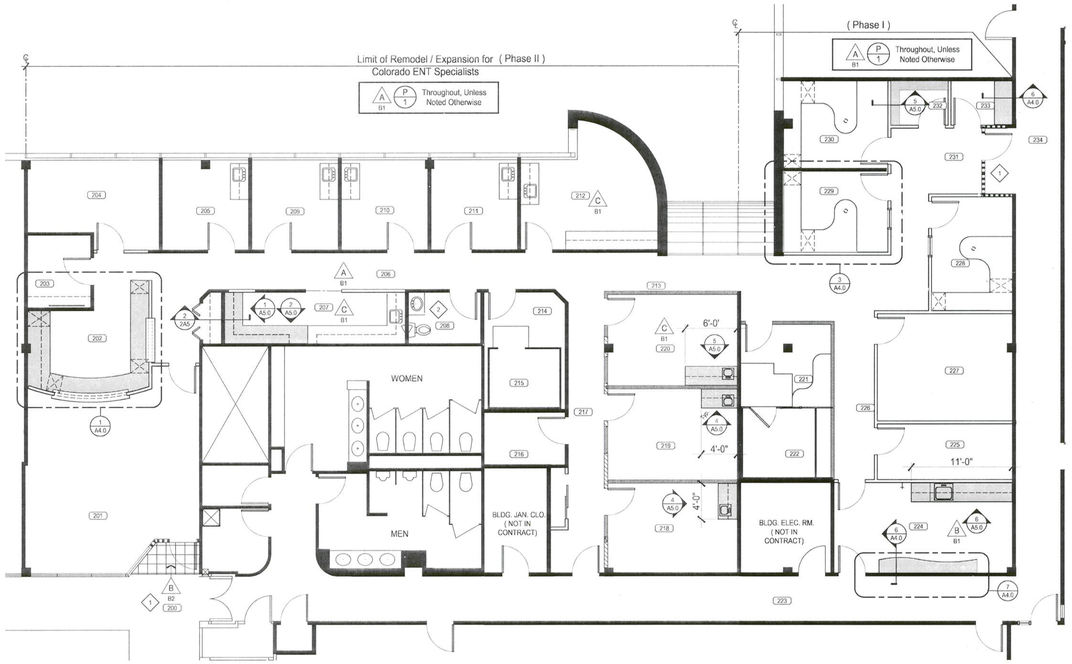

1 Finish Plan

Level Two - Ste. 240

Scale: 1/8" = 1'-0"

0 5 10 20

North

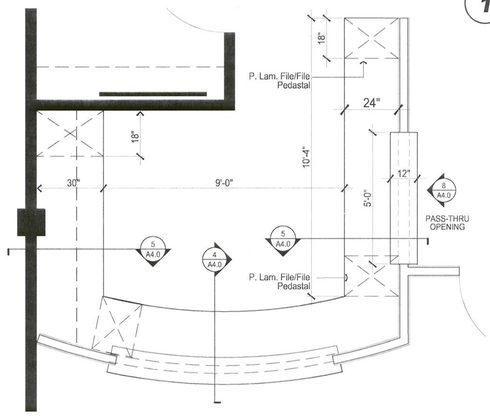

2 Enlarged Plan

At Reception

Scale: 3/8" = 1'-0"

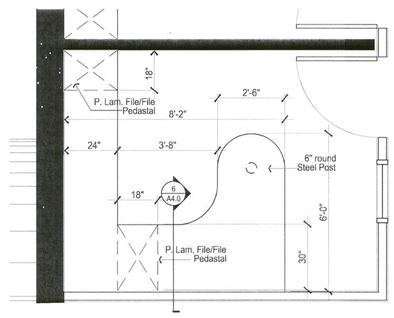

3 Enlarged Plan

Typ. At Medical Offices

Scale: 3/8" = 1'-0"

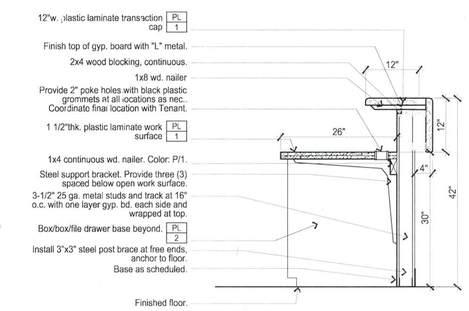

4 Section: Reception Desk

At Reception

Scale: 3/4" = 1'-0"

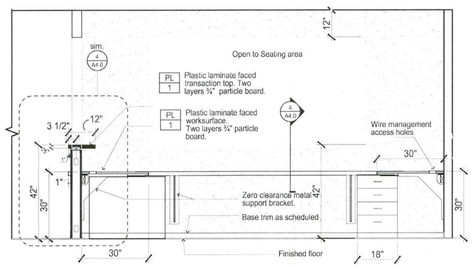

5 Section: Built-In Desk

at Reception desk

Scale: 3" = 1'-0"

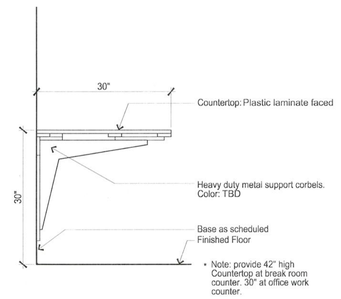

6 Section: Work Surface

Typical at Offices

Scale: 3" = 1'-0"

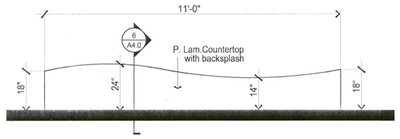

7 Enlarged Plan: Counter

At Break room

Scale: 3/8" = 1'-0"

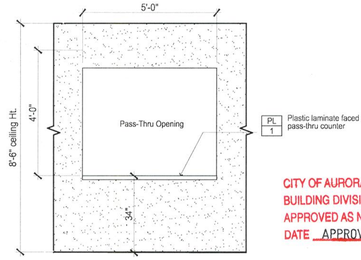

8 Elevation: Pass-Thru Opening

at Reception desk

Scale: 3" = 1'-0"

Room Schedule

200	Public Corridor	221	New Audio Office
201	Entry Area	222	New Audio Booth
202	Reception	223	Public Corridor
203	Storage room	224	Break room
204	Office	225	Storage room
205	Tenant passage	226	Tenant passage
206	Nurse Station	227	Doctor's Office
207	Nurse Station	228	Office
208	Existg. Rest Rm.	229	Office
209	Existg. Exam Rm.	230	Office
210	Existg. Exam Rm.	231	Tenant passage
211	Existg. Exam Rm.	232	Storage
212	Procedure room	233	Work room
213	Tenant passage	234	Public Corridor
214	Existg. Office		
215	Existg Audio Booth		
216	Exist'g. Office		
217	Tenant passage		
218	Exam Room		
219	Exam room		
220	Procedure room		

Sheet Keyed Notes

1. REWORK PUBLIC AREA FINISH TREATMENTS. Repair, replace and/or provide new finish treatments to match existing at this public area as necessary due to remodel work. Coordinate specifications with Building Management.
2. EXISTING FLOORCOVERING to remain in this area.

PHASING NOTE:

G.C. SHALL REVIEW AND COORDINATE WITH TENANT/ TENANTS VENDORS, PROJECT MGR. ON SCHEDULING OF ALL PHASES LISTED PRIOR TO COMMENCEMENT OF WORK. INCLUDE IN BID PHASING OF WORK TO BE DONE AFTER BUSINESS HOURS.

PHASE II CONSTRUCTION SHALL HAVE MIN. OF (2) ADDITIONAL PHASES BASED ON MINIMUM AMOUNT OF AREA THAT CAN BE DONE AT ANY GIVEN TIME.

TPS
TENANT PLANNING SERVICES
INCORPORATED
450 Decatur Street
Denver, Colorado 80204
(303) 861-4800
fax (303) 861-1621
www.tenplan.com

1400 Potomac
1400 Potomac
Aurora, Colorado
Level Two - Ste. 240

Colorado ENT Specialists
Remodel / Expansion

STATE OF COLORADO
KEVIN P. MIKOLS
LICENSED ARCHITECT
No. 11712
5/5/2010

CITY OF AURORA
BUILDING DIVISION
APPROVED AS NOTED RL
DATE APPROVED MAY 06 2010

Dates of Record

20 Apr. 2010 Project Start Date

Issued On Issued For

Apr 2010 Tenant Review & Approval; Pricing and Construction

10-468729

Project Team MH/ IO
Project Number 454006
Sheet Mark **A4.0**

P:\454_Medical Center of Aurora Bldg 1_5\454006.02_Colorado ENT Specialists (Expansion)_1400 Potomac\drawings\construction documents\454006c.dwg, A4.0, 4/30/2010 4:43:31 PM, ishmael0

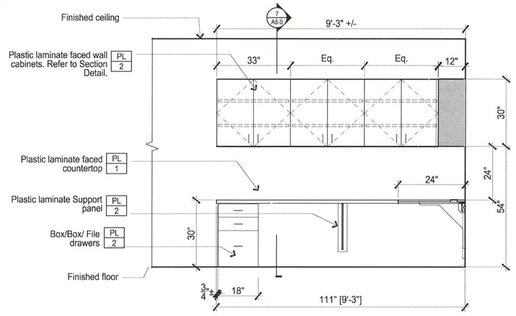

1 Elevation: Cabinets

At Nurse Station 207 Scale: 3/8" = 1'-0"

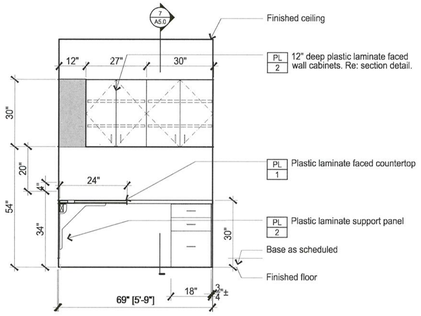

2 Elevation: Cabinets

At Nurse Station 207 Scale: 3/8" = 1'-0"

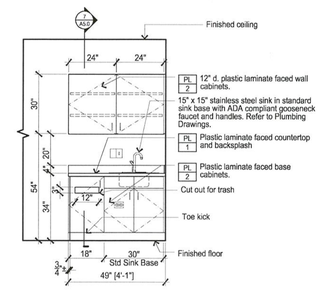

3 Elevation: Cabinets

Typ. at Exam Rooms Scale: 3/8" = 1'-0"

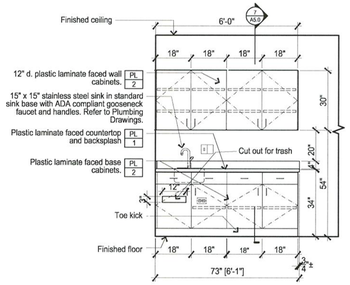

4 Elevation: Cabinets

at Procedure Room 220 Scale: 3/8" = 1'-0"

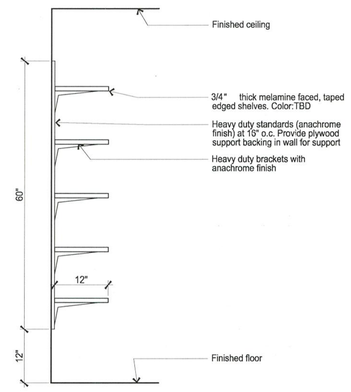

5 Section: Adj. Shelving

at Storage room Scale: 3" = 1'-0"

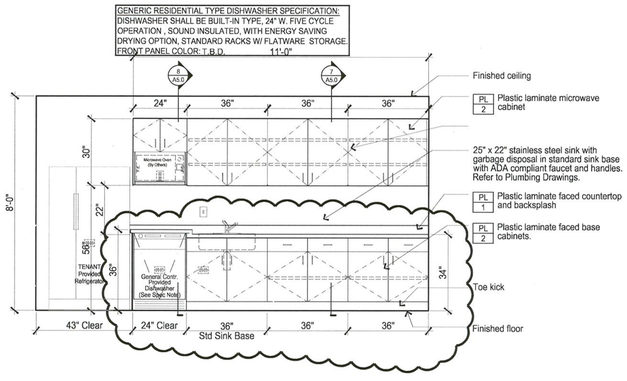

6 Elevation: Cabinets

Break Room #224 Scale: 3/8" = 1'-0"

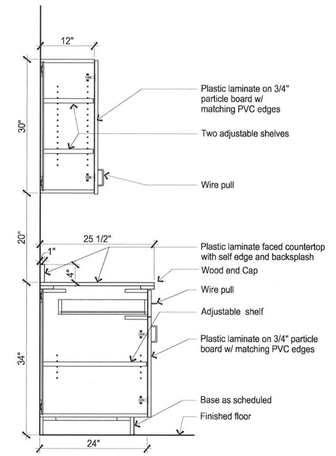

7 Section: Millwork

Where Indicated Scale: 3/4" = 1'-0"

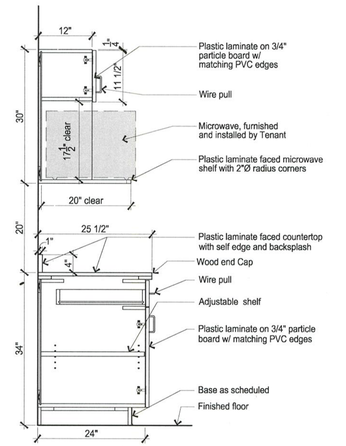

8 Section: Millwork

At Break Room Scale: 3/4" = 1'-0"

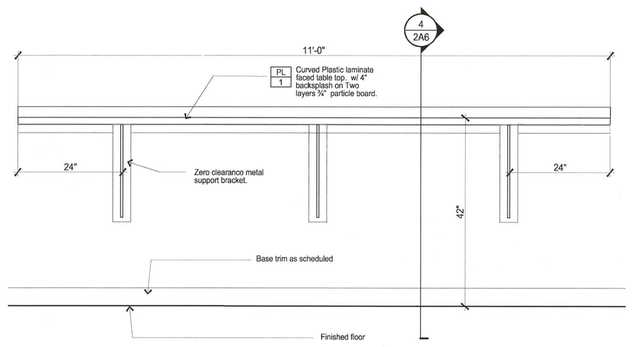

9 Elevation: Built-In Table

At Break room 224 Scale: 3/4" = 1'-0"

CITY OF AURORA
BUILDING DIVISION
APPROVED AS NOTED RJ
DATE APPROVED MAY 17 2010

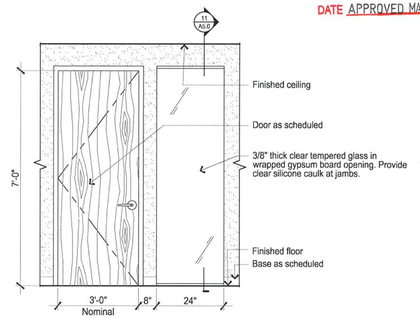

10 Elevation: Door & Sidelite

Typical at Offices Scale: 3/8" = 1'-0"

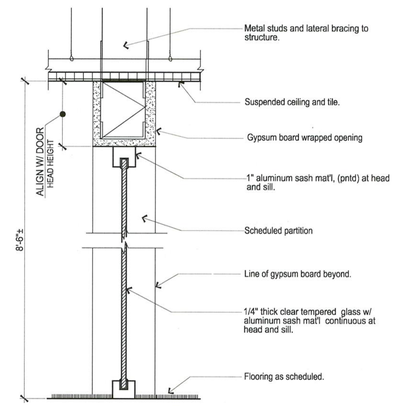

11 Section: Sidelite

Typ. at Offices Scale: 3" = 1'-0"

10-468729

TPS
TENANT PLANNING SERVICES
INCORPORATED
450 Decatur Street
Denver, Colorado 80204
(303) 861-4800
fax (303) 861-1621
www.tenplan.com

1400 Potomac
1400 Potomac
Aurora, Colorado
Level Two - Ste. 240

STATE OF COLORADO
KEVIN P. MILLS
B-1712
5/13/2010
LICENSED ARCHITECT

Colorado ENT Specialists
Remodel / Expansion

Dates of Record

20 Apr. 2010 Project Start Date

Issued On	Issued For
Apr 2010	Tenant Review & Approval; Pricing and Construction

Project Team MH/ IO
Project Number 454006
Sheet Mark **A5.0**

P:\454_Medical Center of Aurora Bldg 1_5\454006.02_Colorado ENT Specialists (Expansion)_1400 Potomac\drawings\construction documents\454006c.dwg, A5.0, 5/12/2010 2:39:23 PM, ishmaelo

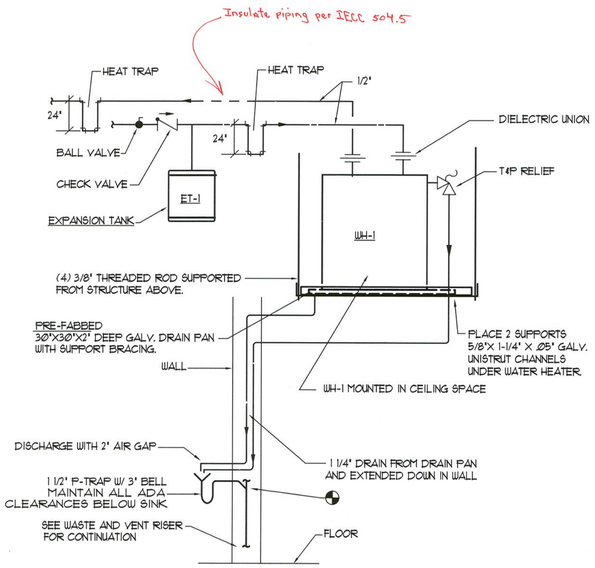

1 ELECTRIC WATER HEATER DETAIL

SCALE: NONE

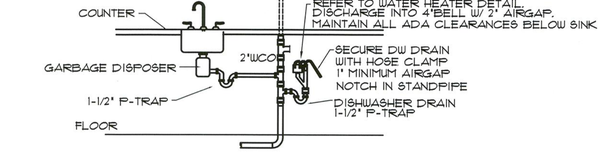

2 DISHWASHER AIRGAP DETAIL

SCALE: NONE

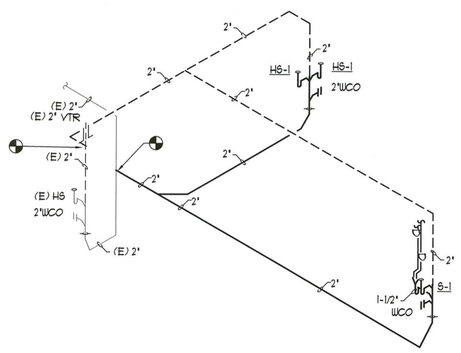

3 WASTE AND VENT ISOMETRIC

SCALE: NONE

FIXTURE LIST

PLAN CODE: S-1
SINK (SINGLE COMPARTMENT-ADA)
MAKE: ELKAY
MODEL: "GECR-2521
SIZE O.A.: 22"L X 25"W X 5-1/2"D
MATERIAL: 20 GA. ST/ST
HOLE DRILLINGS: 4 @ 4" CENTERS
FAUCET: ELKAY "LKD-2453
SUPPLIES & STOPS: WHEEL HANDLE ANGLE VALVE, 1/2" NOM. COMP. INLET X 3/8" O.D. COMP. OUTLET, WITH 20" RISER
ESCUTCHEONS: ONE PIECE CHROME PLATED BRASS
TRAP: 1-1/2" 17 GAUGE, CHROME PLATED BRASS WITH CLEANOUT PLUG
GARBAGE DISPOSER: IN-SINK-ERATOR BADGER 5, 1/2 HP, 120V, 1 PH, 60 HZ
INSULATION: TRUEBRO "103
DRAIN LOCATED LEFT REAR

PLAN CODE: HS-1
HAND SINK
MAKE: ELKAY
MODEL: "LR 1517
SIZE: 15" X 17" X 7-1/2"
MATERIAL: 20 GA. TYPE 304 ST/ST
HOLE DRILLINGS: 3 @ 4" CENTERS
FAUCET: ELKAY "LK-232-5-BH-5
MIXING VALVE: POWERS "LM495, 105 DEG F
SUPPLIES & STOPS: WHEEL HANDLE ANGLE VALVE, 1/2" NOM. COMP. INLET X 3/8" O.D. COMP. OUTLET, WITH 20" RISER
ESCUTCHEONS: ONE PIECE CHROME PLATED BRASS
TRAP: 1-1/2" 17 GAUGE, CHROME PLATED BRASS WITH CLEANOUT

PLAN CODE: WH-1
WATER HEATER
MAKE: STATE
MODEL: "ES6-30-80MS-K
GALLONS: 30
SIZE: 22"DIA X 30"H
WATTS: 16350
ELECTRICAL: 120V, 1 PH, 60 HZ
TEMPERATURE SETTING: 120 DEG. F.
T & P: 3/4" WATTS 100XL

PLAN CODE: ET-1
EXPANSION TANK
MAKE: STATE
MODEL: ETC-2X
SIZE: 8-3/8"DIA X 12-1/2"H
STORAGE: 1.96 GALLON

PLAN CODE: IMB-1
ICEMAKER BOX
MAKE: GUY GRAY
MODEL: "BIM-875

LEGEND

NOTE: NOT ALL ITEMS LISTED MAY APPEAR ON DRAWINGS

SYMBOL	ABBREV	DESCRIPTION
	CW	POTABLE COLD WATER
	HW	POTABLE HOT WATER 110? F
	SS	SANITARY SEWER (BELOW FLOOR/GRADE)
	V	SANITARY (PLBG.) VENT
D	D	CONDENSATE DRAIN
	CW	EXISTING POTABLE COLD WATER
	SS	(E) SANITARY SEWER (BELOW FLOOR/GRADE)
	V	EXISTING SANITARY (PLBG.) VENT
	CAP	PIPE CAP
		POINT OF CONNECTION NEW TO EXISTING
		BALL VALVE
		CHECK VALVE
		UNION
		FCO/GCO
		WCO/CO

GENERAL NOTES

1. ALL COLD WATER PIPING AND VALVES ABOVE FINISHED CEILING AND ALL HOT WATER PIPING AND VALVES ARE REQUIRED TO BE INSULATED WITH GLASS FIBER PIPE COVERING WITH ALL SERVICE JACKET AND SELF-SEAL LAP WITH NON-COMBUSTIBLE MATERIAL MEETING ALL CODE REQUIREMENTS INCLUDING FIRE AND SMOKE HAZARD RATINGS AS TESTED IN CONFORMANCE WITH ASTM E-84, NATIONAL FIRE PROTECTION AGENCY 225 AND UL 723, NOT EXCEEDING FLAME SPREAD RATING OF 25 AND A SMOKE DEVELOPED RATING OF 50. COLD WATER PIPE SIZES 1/2" THRU 4" = 1/2" THICK INSULATION. HOT WATER PIPE SIZES 1/2" THRU 1-1/2" = 1" THICK INSULATION.
2. ALL PLUMBING SYSTEMS ARE REQUIRED TO BE INSTALLED IN ACCORDANCE WITH LOCAL AND STATE JURISDICTIONAL CODES, ORDINANCES AND APPLICABLE REGULATIONS.
3. THE WORK REQUIRED CONSISTS OF PERFORMING ALL LABOR AND FURNISHING ALL MATERIALS, FIXTURES AND EQUIPMENT REQUIRED TO PROVIDE A COMPLETE PLUMBING INSTALLATION AS INDICATED ON THE DRAWINGS. IT SHALL FURTHER INCLUDE FURNISHING AND INSTALLING ALL MISCELLANEOUS MINOR ITEMS REQUIRED FOR THE OPERATION OF THE SYSTEM WHETHER SPECIFICALLY CALLED FOR OR NOT.
4. THIS CONTRACTOR SHALL PAY FOR ALL PERMITS AND INSPECTION FEES REQUIRED BY STATE AND LOCAL AUTHORITIES.
5. VALVES AND CLEANOUTS SHALL BE INSTALLED AS SHOWN ON THE DRAWINGS, OR AS REQUIRED BY LOCAL CODES AND REGULATIONS.
6. AT THE COMPLETION OF THE WORK AND PRIOR TO FINAL ACCEPTANCE, ALL PARTS OF THE WORK INSTALLED UNDER THIS SPECIFICATION SHALL BE THOROUGHLY CLEANED.
7. THE PIPE AND FIXTURES SHOWN ON THIS DOCUMENT ARE FOR REFERENCE ONLY. MINOR ADJUSTMENTS MAY BE REQUIRED FOR INSTALLATION OF NEW PIPING AND DEMOLITION OF EXISTING PIPING AND SHALL BE PART OF THIS CONTRACTORS WORK.
8. PATCH AND REPAIR TO MATCH EXISTING, ANY WALL/CEILINGS TO BE ACCESSED TO ROUTE PIPING. ALL GAS PIPING LOCATED ON ROOF SHALL BE PAINTED.
9. COREDRILL EXISTING FLOOR AS REQUIRED FOR INSTALLATION OF GAS, WASTE, AND VENT PIPING. PATCH AND REPAIR TO MATCH EXISTING.
10. TESTS: TEST ALL PLUMBING IN ACCORDANCE WITH REQUIREMENTS OF UNIFORM PLUMBING CODE.
11. CONTRACTOR SHALL VERIFY EXACT LOCATION OF ALL EXISTING UTILITIES PRIOR TO PRICING AND CONSTRUCTION.
12. PIPING SHALL BE AS FOLLOWS:
    WATER DISTR. PIPING: TYPE "L" COPPER W/WROUGHT COPPER FITTINGS & 95-5 TIN ANTIMONY JNTS
    SOIL, WASTE VENT & STORM PIPING:
    ABOVE GRADE: S.V. NO-HUB CAST IRON WITH STAINLESS CLAMP W/ NEO. GASKET JOINTS
    BELOW GRADE: S.V. HUB & SPIGOT CAST IRON WITH NEO. COMP. GASKET JOINTS
13. PLUMBING CONTRACTOR SHALL COORDINATE INSTALLATION OF ALL BELOW FLOOR PIPING WITH TENANT BELOW AND INSTALL AFTER HOURS AS REQUIRED.

FIRE PROTECTION NOTES

1. CONTRACTOR IS TO MODIFY EXISTING AUTOMATIC FIRE SPRINKLER SYSTEM AND PROVIDE NEW SPRINKLER HEADS WHERE REQUIRED. NEW SPRINKLER HEADS ARE ARE TO MATCH EXISTING BUILDING STANDARD.
2. THE FIRE PROTECTION CONTRACTOR SHALL MODIFY THE EXISTING SYSTEM TO PROVIDE A COMPLETE FIRE PROTECTION SYSTEM OF TYPE, PRESSURE, FLOW, AND DENSITIES REQUIRED BY AND IN ACCORDANCE WITH THE NATIONAL FIRE PROTECTION ASSOCIATION, ALL LOCAL JURISDICTIONAL AGENCIES CODES, AND THE OWNER'S INSURANCE CARRIER. THE TOTAL SYSTEM SHALL BE ACCEPTED WITHOUT PREMIUM PENALTIES BY INSURANCE CARRIER OR LOCAL AUTHORITY DUE TO SYSTEM DESIGN.
3. THIS CONTRACTOR SHALL FIELD VERIFY ALL EXISTING EQUIPMENT, DUCTWORK, PIPING, AND FIRE PROTECTION SYSTEM PRIOR TO STARTING CONSTRUCTION. COORDINATE INSTALLATION AND CONFLICTS WITH THE GENERAL CONTRACTOR.
4. SHOP DRAWINGS (6 SETS) BEARING THE LOCAL BUILDING AND FIRE DEPARTMENT STAMPS OR APPROVAL SHALL BE SENT TO THE ARCHITECT PRIOR TO COMMENCING WORK. PLANS SHALL RELATE THE FIRE PROTECTION SYSTEM WITH STRUCTURE AND ALL PERTINENT TRADES. NECESSARY CLARIFYING DETAILS AND SECTIONS SHALL BE INCLUDED. ALL DRAWINGS CONTAINED IN THIS SUBMITTAL SHALL BEAR THE STAMP AND SIGNATURE OF A COLORADO REGISTERED ENGINEER EMPLOYED BY THIS CONTRACTOR.
5. OBTAIN FROM OWNER AND OWNER'S INSURANCE CARRIER ALL INFORMATION AND REQUIREMENTS NECESSARY FOR SYSTEM DESIGN INCLUDING BUT NOT LIMITED TO ACTIVITIES OF TENANT, TYPE, HEIGHT AND MATERIALS OF STORAGE.
6. PIPING AND FITTINGS SHALL MATCH EXISTING BUILDING STANDARD.
7. FIRE PROTECTION CONTRACTOR SHALL PROVIDE ALL ITEMS, ARTICLES, MATERIALS, OPERATIONS, OR METHODS MENTIONED OR SHOWN ON DRAWINGS, AND/OR HEREIN INCLUDING ALL LABOR, MATERIALS, EQUIPMENT, AND INCIDENTALS NECESSARY AND REQUIRED FOR COMPLETE SYSTEM OF SPRINKLERS.
8. IT IS THE INTENT OF THE SCOPE OUTLINE TO PROVIDE A COMPLETE ECONOMICAL PIPE SPRINKLER SYSTEM FOR THE BUILDING, AND IT SHALL BE THIS CONTRACTOR'S RESPONSIBILITY TO FURNISH ALL ITEMS, MATERIALS, LABOR, AND ALL OTHER COSTS TO COMPLETE THE CONTRACT WITHIN THE INTENT OF THE OUTLINE EVEN THOUGH EACH AND EVERY ITEM IS NOT SPECIFICALLY MENTIONED. THE CONTRACTOR SHALL BE AN APPROVED SPRINKLER INSTALLER AND SHALL HAVE HAD AT LEAST TEN YEARS OF EXPERIENCE IN THIS TYPE OF WORK.
9. CONTRACTOR SHALL SUBMIT PRODUCT DATA FOR ALL COMPONENTS TO BE UTILIZED IN THE INSTALLATION OF THIS SYSTEM.

CITY OF AURORA
BUILDING DIVISION
APPROVED AS NOTED RL
DATE APPROVED MAY 06 2010

10-468729

IMPACT ENGINEERING, INC.
2256 South Dayton Street
Denver, Colorado 80231
Phone: 303-873-6670 Fax: 303-873-6782

1400 Potomac
1400 Potomac
Aurora, Colorado
Level Two - Suite #240

REGISTERED PROFESSIONAL ENGINEER 30057 MECHANICAL

MAY 03 2010

Colorado ENT Specialists Remodel/ Expansion

Dates of Record
26 Feb 2010 Project Start Date

Issued On:	Issued For:
4-30-10	Construction

Sheet Contents	Notes, Details
Project Team	CADD/BSA
Project Number	987654
Sheet Mark	**2P1.1**

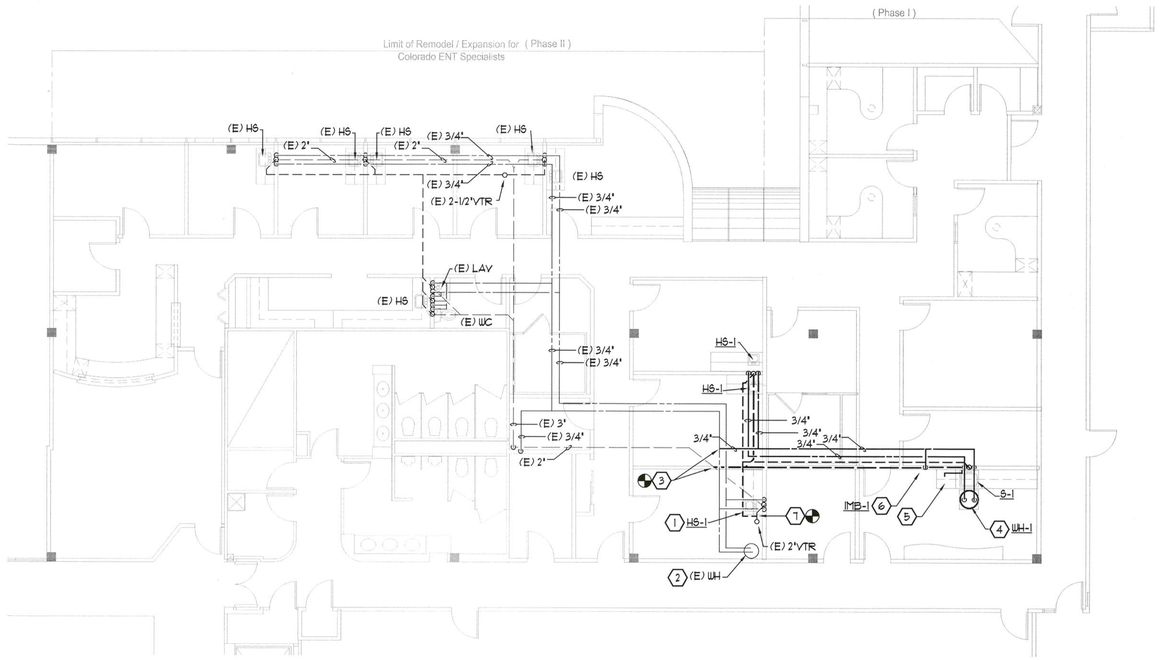

1 **Plumbing Plan**
Level Two - Suite #240

Scale: 1/8" = 1'-0"

0 5 10 20

North

KEY NOTES

1. (E) SINK TO BE REMOVED. CONNECT NEW HAND SINK TO EXISTING ROUGHINS. CONTRACTOR SHALL MODIFY EXISTING ROUGHINS AS REQUIRED.
2. (E) ELECTRIC WATER HEATER TO REMAIN. MODIFY EXISTING DRAINS AS REQUIRED AND ROUTE TO NEW BREAK SINK LOCATION. ROUTE DOWN IN WALL AND DISCHARGE INTO DW STANDPIPE.
3. CONNECT 2"W AND 3/4"CW TO (E) 2"W AND 3/4"CW. CONTRACTOR SHALL FIELD VERIFY EXACT SIZE AND LOCATION OF EXISTING PIPING AND MODIFY ROUTING AS REQUIRED.
4. CONNECT 3/4"CW AND 3/4"HW TO ELECTRIC WATER HEATER. REFER TO ELECTRIC WATER HEATER DETAIL.
5. CONNECT 1/2"HW TO DISHWASHER WITH SHUTOFF LOCATED BELOW SINK. ROUTE DRAIN TO SINK. REFER TO DISHWASHER AIRGAP DETAIL.
6. CONNECT 1/2"CW TO REFRIGERATOR ICEMAKER BOX. ROUTE SOFT COPPER TUBING AND CONNECT TO ICEMAKER AS REQUIRED.
7. CONNECT 2"V TO (E) 2"V. CONTRACTOR SHALL FIELD VERIFY EXACT SIZE AND LOCATION OF EXISTING PIPING AND MODIFY ROUTING AS REQUIRED.

FIXTURE CONNECTION SCHEDULE

FIXTURE	COLD WATER	HOT WATER	WASTE	VENT
PUBLIC FIXTURES				
HAND SINK (HS-1)	1/2"	1/2"	2"	2"
SINK (S-1)	1/2"	1/2"	2"	2"

Room Schedule

200	Public Corridor	221	New Audio Office
201	Entry	222	New Audio Booth
202	Reception	223	Public Corridor
203	Storage room	224	Break room
204	Office	225	Storage room
205	Tenant passage	226	Tenant passage
206	Nurse Station	227	Doctor's Office
207	Nurse Station	228	Office
208	Existg. Rest Rm.	229	Office
209	Existg. Exam Rm.	230	Office
210	Existg. Exam Rm.	231	Tenant passage
211	Existg. Exam Rm.	232	Storage
212	Procedure room	233	Work room
213	Tenant passage	234	Public Corridor
214	Existg. Office		
215	Existg Audio Booth		
216	Exist'g. Office		
217	Tenant passage		
218	Exam Room		
219	Exam room		
220	Procedure room		

CITY OF AURORA
BUILDING DIVISION
APPROVED AS NOTED RL
DATE APPROVED MAY 06 2010

10-468729

IMPACT ENGINEERING, INC.
2256 South Dayton Street
Denver, Colorado 80231
Phone: 303-873-6670 Fax: 303-873-6782

1400 Potomac
1400 Potomac
Aurora, Colorado
Level Two - Suite #240

MAY 03 2010

Colorado ENT Specialists Remodel/ Expansion

Dates of Record
26 Feb 2010 Project Start Date

Issued On:	Issued For:
4-30-10	Construction

Sheet Contents	Plumbing Plan
Project Team	CADD/BSA
Project Number	987654
Sheet Mark	**2P2.1**

OUTSIDE AIR SCHEDULE

EQUIPMENT NO.	ZONE OCCUPANCY	FLOOR AREA	PEOPLE / SQ. FOOT	NO. OF PEOPLE	CFM PER PERSON	REQ'D O.A. CFM	DESIGN CFM	OUTSIDE AIR (25%)
BUILDING AIR HANDLER	ENTRY #101	340	1/1000	3	20	60	525	131*
	RECPT. #102	175	1/1000	2	20	40	175	43*
	STORAGE #103	64	1/1000	1	20	20	125	31*
	OFFICE #104	135	1/1000	1	20	20	280	70*
	EXAM #105	100	1/1000	2	20	40	230	57*
	NURSE #107	126	1/1000	1	20	20 13	200	50*
	EXAM #109	100	1/1000	2	20	40	230	57*
	EXAM #110	100	1/1000	2	20	40	230	57*
	EXAM #111	100	1/1000	2	20	40	230	57*
	EXAM #112	150	1/1000	2	20	40	220	55*
	AUDIO #214/215	117	1/1000	2	20	40	160	40*
	EXAM #216	140	1/1000	2	20	40	160	40*
	EXAM #218	140	1/1000	2	20	40	160	40*
	EXAM #219	140	1/1000	2	20	40	160	40*
	PROCEDURE #220	140	1/1000	2	20	40	160	40*
	AUDIO #221/222	110	1/1000	2	20	40	160	40*
	BREAK #224	200	1/1000	2	20	40	160	40*
	STORAGE #225	90	1/1000	1	20	20	100	25*
	DOCTOR #227	180	1/1000	2	20	40 19	160	40*
	OFFICE #228	117	1/1000	2	20	40 12	160	40*
	OFFICE #229	108	1/1000	2	20	40	160	40*
	OFFICE #230	120	1/1000	2	20	40	160	40*
	STORAGE #232	36	1/1000	1	20	20 5	80	20*
	WORK #233	35	1/1000	1	20	20 10	80	20*

THE OUTSIDE AIR CFM QUANTITY IS BASED 2006 INTERNATIONAL MECHANICAL CODE SECTION 403, TABLE 403.3

NOTES
* OUTSIDE AIR PROVIDED BY BASE BUILDING AIR HANDLING UNIT IS 25%.
** OUTSIDE AIR REQUIRED PER 2006 INTERNATIONAL MECHANICAL CODE

AIR DEVICE SCHEDULE

PLANCODE — (NECK SIZE / CFM)

PLAN CODE	TYPE & SERVICE	NECK SIZE	MOUNTING TYPE	FACE SIZE	VOLUME DAMPER	MATERIAL	MANUFACTURER & MODEL NO.	REMARKS	PLAN CODE
A	(2) 1" SLOTS- 4'-0" LONG SUPPLY SLOT	AS NOTED	LAY-IN	48X4	NO	STEEL	TRANE LINR (252W)		A
B	24X24 SUPPLY AIR DIFFUSER	AS NOTED	LAY-IN	24X24	NO	STEEL	TITUS TDC		B
C	RETURN AIR GRILLE	22X22	LAY-IN	24X24	NO	STEEL	TITUS PAR		C
D	RETURN AIR GRILLE	22X10	LAY-IN	24X12	NO	STEEL	TITUS PAR		D

NOTE: 1. COLOR BY ARCHITECT FOR ALL GRILLES, REGISTERS & DIFFUSERS

VAV TERMINAL SCHEDULE (VAV)

PLAN CODE	MAX CFM	MIN CFM	WIDE OPEN SP ("WC)	INLET SIZE	OUTLET SIZE ("W X "H)	RADIATED NC AT 1" SP	SIZE L (IN)	SIZE W (IN)	SIZE H (IN)	REMARKS	PLAN CODE
A	250	25	0.49	4"ø	9x9	20	11	10	10	TRANE VCCF 05	A
B	550	55	0.64	8"ø	9x9	23	11	10	10	TRANE VCCF 08	B
C	1000	100	0.42	10"ø	11x9	21	11	12	10	TRANE VCCF 10	C
D	1600	160	0.37	12"ø	13x11	22	13	14	13	TRANE VCCF 12	D
E	2300	230	0.39	14"ø	15x14	24	13	16	15	TRANE VCCF 14	E

ACCESSORIES:
1. F.O. = FLAT OVAL
2. MINIMUM AIR FLOW AT BOXES SHALL BE 25% OF PRIMARY AIR.
3. PROVIDE PNEUMATIC CONTROLS AND COOLING ONLY THERMOSTAT.

VAV BOX CODE / COOLING CFM

MECHANICAL EQUIPMENT

ELECTRIC BASEBOARD RADIATION EBBR-1

BERKO ELECTRIC PANEL MODEL 2542GW, 376 WATTS, 208V/1PH, WEIGHT=30 LBS. PROVIDE WALL MOUNT BRACKETS INTERLOCK WITH EXISTING BASEBOARD RADIATION CONTROLS.

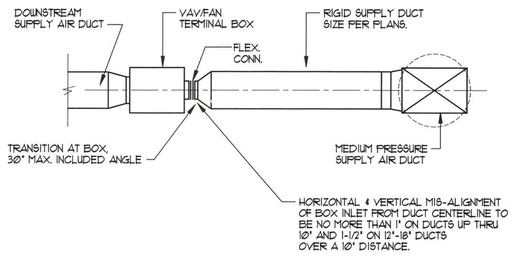

1 VAV BOX DUCT ALIGNMENT
SCALE: NONE

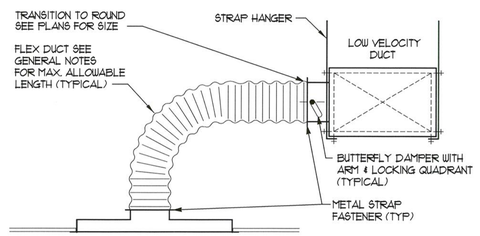

2 DIFFUSER INSTALLATION DETAIL
SCALE: NONE

CITY OF AURORA
BUILDING DIVISION
APPROVED AS NOTED RL
DATE APPROVED MAY 06 2010

GENERAL NOTES

1. PERFORM WORK IN ACCORDANCE WITH THE LATEST EDITION OF ALL RULES, REGULATIONS AND CODES OF THE STATE OF COLORADO AND JURISDICTIONAL REQUIREMENTS.
2. THE MECHANICAL DRAWINGS INDICATE THE GENERAL DESIGN AND ARRANGEMENT OF LINES, EQUIPMENT, SYSTEM, ETC. INFORMATION SHOWN IS DIAGRAMMATIC IN CHARACTER AND DOES NOT INDICATE EVERY REQUIRED OFFSET, FITTING, ETC. DO NOT SCALE FOR DIMENSIONS.
3. THIS CONTRACTOR IS RESPONSIBLE FOR COORDINATING ALL WORK UNDER HIS CONTRACT WITH ALL OTHER BUILDING TRADES.
4. SOME ASSUMPTIONS WERE MADE REGARDING DUCT CONFIGURATION DURING DESIGN. THIS CONTRACTOR IS RESPONSIBLE FOR VERIFYING ALL FIELD CONDITIONS PRIOR TO THE PURCHASE OF ANY MATERIALS AND COMMENCEMENT OF ANY WORK AND IS TO NOTIFY THE ARCHITECT OF ANY DISCREPANCIES FOR RESOLUTION.
5. MECHANICAL CONTRACTOR TO VERIFY OPERATION AND CONDITION OF ALL EQUIPMENT BEING UTILIZED. IF EQUIPMENT IS NOT IN WORKING ORDER, CONTRACTOR TO NOTIFY ARCHITECT TO GET DIRECTION TO MAKE NECESSARY REPAIRS TO SUCH EQUIPMENT TO MAKE EQUIPMENT OPERATIONAL.
6. PROVIDE SUFFICIENT ACCESS TO SERVICE ALL MECHANICAL EQUIPMENT.
7. MAINTAIN ONE SET OF RED-LINE AS-BUILT DRAWINGS ON JOB SITE. SUBMIT TO ARCHITECT AT COMPLETION OF ALL WORK.
8. SUBMIT SHOP DRAWINGS OF ALL EQUIPMENT TO ARCHITECT. IN ADDITION, SUBMIT THE FOLLOWING INFORMATION TO THE ARCHITECT AT COMPLETION OF WORK.
   A. OPERATION AND MAINTENANCE MANUAL
   B. TESTING AND BALANCING DATA
   C. CERTIFICATION OF FINAL INSPECTION
9. ALL EQUIPMENT, MATERIALS AND INSTALLATION IS TO BE WARRANTEED FOR ONE YEAR TO BE FREE FROM DEFECT. PROVIDE WRITTEN WARRANTY TO OWNER.
10. PROVIDE NOISE AND VIBRATION ISOLATION FOR ALL EQUIPMENT. PROVIDE 1/2" (R-5) ACOUSTIC LINER FOR ALL SHEET METAL SUPPLY AIR DUCTWORK AND 1/2" FOR ALL SHEETMETAL EXHAUST DUCTWORK. PROVIDE FLEX CONNECTIONS AT ALL EQUIPMENT INLETS AND OUTLETS.
11. ALL DUCTWORK TO BE OF SHEETMETAL CONSTRUCTION PER SMACNA STANDARDS FOR LOW PRESSURE DISTRIBUTION. PROVIDE ALL VOLUME DAMPERS AND TURNING VANES NECESSARY FOR A COMPLETE AND FUNCTIONAL SYSTEM. COORDINATE SHEETMETAL LAYOUT WITH ALL OTHER TRADES PRIOR TO ANY FABRICATION. NOTIFY ENGINEER OF ANY DISCREPANCIES PRIOR TO PROCEEDING WITH WORK.
12. ALL CONTROL WORK TO BE PER MECHANICAL EQUIPMENT LIST. PROVIDE ANY NECESSARY TRANSFORMERS FOR LOW VOLTAGE CONTROL CIRCUITS. LOW VOLTAGE (24v) WIRING TO BE BY M.C.
13. AT THE COMPLETION OF WORK, PROVIDE TESTING AND BALANCING SERVICES FOR MECHANICAL SYSTEMS. AT COMPLETION OF WORK, SUBMIT WRITTEN REPORT TO ARCHITECT LISTING DIFFUSER AIR FLOWS AND VARIABLE AIR VOLUME BOX FLOWS, WATER FLOWS, ELECTRIC DATA, TEMPERATURES AND PRESSURE DROPS.
14. M.C. TO BE RESPONSIBLE FOR ALL MOTOR STARTERS.
15. COORDINATE DIFFUSER AND GRILLE PLACEMENT WITH CEILING AND LIGHTING INSTALLATION FOR CONSISTENT AND FUNCTIONAL PATTERN.
16. ALL DUCTWORK SIZES ARE CLEAR INSIDE DIMENSIONS. INCREASE SHEETMETAL ACCORDINGLY TO ACCOMMODATE DUCT LINER.
17. RETURN AIR PLENUM IS REQUIRED TO MEET THE REQUIREMENTS OF SECTION 602 OF THE INTERNATIONAL MECHANICAL CODE. ALL NEW AND EXISTING EXPOSED MATERIALS SHALL BE NON-COMBUSTIBLE OR HAVE A FLAME SPREAD INDEX OF NOT MORE THAT 25/50.
18. ALL FLEXIBLE DUCTWORK SHALL BE INSULATED WITH 1" (R-5) FIBERGLAS WRAP AND THE MAXIMUM LENGTH IS NOT TO EXCEED 5'-0".
19. ALL RIGID ROUND DUCTWORK SHALL BE SHEETMETAL WITH A MINIMUM OF 1-1/2" (R-5) FIBERGLAS WRAP. SEAL PER SMACNA RECOMMENDATION.
20. INSTALL ALL THERMOSTAT AND SWITCHES WHERE SHOWN ON PLANS AT 48" A.F.F. COORDINATE LOCATION WITH ELECTRICAL CONTRACTOR.
21. CONTRACTOR SHALL VERIFY THAT ALL VAV BOXES AND ELECTRIC BASEBOARD RADIATION ARE INTERLOCKED PER BUILDING STANDARDS AND CORRECT IF REQUIRED FOR A COMPLETE AND FUNCTIONAL SYSTEM.
22. EXISTING BUILDING CONTROLS ARE PNEUMATIC. CONTRACTOR SHALL VERIFY THAT ALL EQUIPMENT IS CONTROLLED PER BUILDING STANDARD REQUIREMENTS.

MECHANICAL LEGEND

NOTE: NOT ALL ITEMS MAY APPEAR ON DRAWINGS

SYMBOL	ABBREV.	DESCRIPTION
	FLEX	FLEXIBLE DUCTWORK
T	TSTAT	THERMOSTAT
(E)	(E)	EXISTING DUCTWORK TO REMAIN
		EXISTING DUCTWORK TO BE REMOVED
		SUPPLY AIR DUCT UP
		RETURN, EXHAUST OR OUTSIDE AIR DUCT UP
		SUPPLY AIR DUCT DOWN
		RETURN, EXHAUST OR OUTSIDE AIR DUCT DOWN
	FLEXCON	FLEX DUCT CONNECTION
		ELBOW W/TURNING VANES
MVD	MVD	MANUAL VOLUME DAMPER
SPIN-IN	SPIN-IN	SPIN-IN FITTING W/MVD
UC — 1"	UC	UNDERCUT DOOR W/UNDERCUT HEIGHT
		CEILING OR DUCT ACCESS PANEL
		NEW CONNECTION TO EXISTING MECHANICAL

10-468729

IMPACT ENGINEERING, INC.
2256 South Dayton Street
Denver, Colorado 80231
Phone: 303-873-6670 Fax: 303-873-6782

1400 Potomac
1400 Potomac
Aurora, Colorado
Level Two - Suite #240



MAY 03 2010

Colorado ENT Specialists Remodel/ Expansion

Dates of Record
26 Feb 2010 Project Start Date
Issued On: dd MMMYY Issued For: Construction

Sheet Contents: Mechanical Notes, and Details
Project Team: CADD/BSA
Project Number: 987654
Sheet Mark: **2M1.1**

KEY NOTES

1. EXISTING RETURN AIR GRILLE TO REMAIN. (TYPICAL.)
2. RELOCATE EXISTING RETURN AIR GRILLE AS SHOWN. (TYPICAL)
3. RETURN AIR GRILLES/EXHAUST REGISTER. SEE AIR DEVICE SCHEDULE FOR (TYPICAL).
4. EXISTING SUPPLY AIR DEVICE TO REMAIN. BALANCE TO AIR QUANTITY AS INDICATED (TYPICAL).
5. RELOCATE EXISTING SUPPLY AIR DIFFUSER AS SHOWN. EXTEND EXISTING FLEX/RIGID ROUND AS REQUIRED TO ACCOMMODATE NEW DIFFUSER LOCATION. BALANCE TO AIR QUANTITY AS INDICATED (TYPICAL).
6. SUPPLY AIR DIFFUSER. SEE AIR DEVICE SCHEDULE FOR TYPE. CONNECT FLEXIBLE DUCTWORK, RIGID ROUND DUCTWORK, AND CONICAL SPIN-IN FITTING W/VOLUME DAMPER TO MAIN DUCT AS SHOWN. BALANCE TO AIR QUANTITY AS INDICATED (TYPICAL).
7. (E) DUCTWORK TO REMAIN. (TYPICAL)
8. LOW PRESSURE SUPPLY AIR DUCTWORK SHALL BE SHEETMETAL WITH LINER PER GENERAL NOTES. INDICATED SIZE IS CLEAR INSIDE DIMENSIONS.
9. (E) VARIABLE AIR VOLUME BOX TO REMAIN. BALANCE TO AIR QUANITITY AS INDICATED. (TYPICAL)
10. NEW VARIABLE AIR VOLUME BOX. INSTALL PER MANUFACTURES RECOMMENDATIONS. BALANCE TO AIR QUANITITY AS INDICATED.
11. CONNECT NEW MEDIUM PRESSURE DUCTWORK TO EXISTING AS REQUIRED.
12. (E) THERMOSTAT TO REMAIN.
13. NEW LOCATION OF (E) THERMOSTAT. MOUNT T-STAT 48" AFF.
14. NEW THERMOSTAT MATCH BUILDING STANDARD. MOUNT T-STAT 48" AFF. (TYPICAL)
15. CAP EXISTING DUCTWORK AIRTIGHT AS SHOWN. REMOVE DUCTWORK DOWNSTREAM OF CAP (TYPICAL).
16. EXISTNG TOILET EXHAUST FAN TO REMAIN.
17. EXISTNG ELECTRIC BASEBOARD RADIATION TO REMAIN. (TYPICAL)
18. NEW ELECTRIC BASEBOARD RADIATION. INSTALL PER MANUFACTURES RECOMMENDATIONS. ACTIVE SECTION SHALL BE 2'-6" ENCLOSURE SHALL BE (+) OR (-) 9'-0" LONG. PROVIDE ALL REQUIRED ACCESSORIES FOR INSTALLATION.
19. EXISTING RADIANT PANEL TO REMAIN.
20. RELOCATE EXISTING RADIANT PANEL AS INDICATED.
21. EXISTING RADIANT PANEL THERMOSTAT TO BE LOCATED AS INDICATED. RECONNECT RADIANT PANELS AS INDICATED.
22. NEW RADIANT PANEL THERMOSTAT TO BE LOCATED AS INDICATED. CONNECT TO EXISTING RADIANT PANELS AS INDICATED.
23. REBALANCE EXISTING VAV BOX AS REQUIRED TO ACCOMMODATE REMOVAL OF SLOT DIFFUSER INDICATED.

NOTES

1. CONTRACTOR SHALL VERIFY OPERATION AND CONDITION OF EXISTING ELECTRIC BASEBOARD RADIATION PRIOR TO BID/PRICING AND PROVIDE PRICE TO REPAIR AS REQUIRED.
2. EXISTING TOILET EXHAUST SYSTEM SHALL REMAIN, NO WORK REQUIRED.
3. NEW 24X24 SUPPLY AIR DIFFUSERS IN ROOM #207 SHALL HAVE PLENUM INSTALLED ON TOP WITH OVAL DUCTWORK CONNECTED AS REQUIRED.

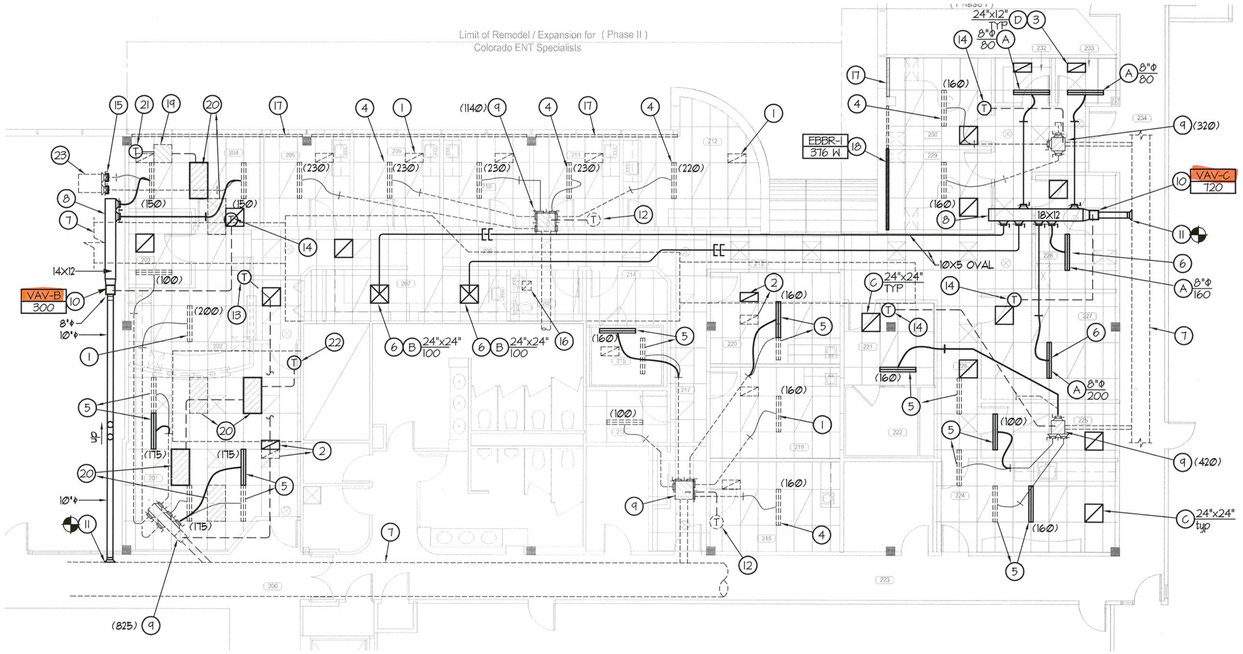

Room Schedule

200	Public Corridor	221	New Audio Office
201	Entry	222	New Audio Booth
202	Reception	223	Public Corridor
203	Storage room	224	Break room
204	Office	225	Storage room
205	Tenant passage	226	Tenant passage
206	Nurse Station	227	Doctor's Office
207	Nurse Station	228	Office
208	Existg. Rest Rm.	229	Office
209	Existg. Exam Rm.	230	Office
210	Existg. Exam Rm.	231	Tenant passage
211	Existg. Exam Rm.	232	Storage
212	Procedure room	233	Work room
213	Tenant passage	234	Public Corridor
214	Existg. Office		
215	Existg Audio Booth		
216	Exist'g. Office		
217	Tenant passage		
218	Exam Room		
219	Exam room		
220	Procedure room		

2 Mechanical Plan

Level Two - Suite #240

Scale: 1/8" = 1'-0"

0 5 10 20

North

CITY OF AURORA
BUILDING DIVISION
APPROVED AS NOTED RL
DATE APPROVED MAY 17 2010

10-468729

IMPACT ENGINEERING, INC.
2256 South Dayton Street
Denver, Colorado 80231
Phone: 303-873-6670 Fax: 303-873-6782

1400 Potomac

1400 Potomac
Aurora, Colorado
Level Two - Suite #240

REGISTERED PROFESSIONAL ENGINEER

MAY 03 2010

Colorado ENT Specialists Remodel/ Expansion

Dates of Record

26 Feb 2010 Project Start Date

Issued On:	Issued For:
4-30-10	Construction

Sheet Contents	Mechanical Plan
Project Team	CADD/BSA
Project Number	987654
Sheet Mark	2M2.1

LEGEND

NOTE: ALL SYMBOLS MAY NOT BE USED ON THIS PROJECT

DEVICES

- SINGLE RECEPT. - 125V, 15A/20A AS REQUIRED
- DUPLEX RECEPT.- 125V, 15A/20A AS REQUIRED
- FOURPLEX RECEPT. - 125V, 15A/20A AS REQUIRED
- HALF-SWITCHED RECEPT. - 125V, 15A/20A AS RQ'D
- SPECIAL PURPOSE RECEPT. - V AND A AS REQUIRED
- FLUSH FLOOR OUTLET (DEVICE AS INDICATED)
- CLOCK RECEPTACLE
- PM12 — PLUGMOLD - # INDICATES RECEPTACLE SPACING O.C.
- WM — WIREMOLD - AS SPECIFIED ON PLAN
- PP — POWER POLE
- PP — POWER/DATA POLE (DIVIDED)
- S — SINGLE POLE SWITCH
- S_2 — TWO POLE SWITCH
- S_3 — 3-WAY SWITCH
- S_4 — 4-WAY SWITCH
- S_D — DUAL-LEVEL SWITCHING (ALTERNATE LAMPS)
- S_P — SWITCH WITH PILOT LIGHT
- S_K — KEY OPERATED SWITCH
- D OR S_D — DIMMER SWITCH - WATTAGE AS REQUIRED
- S_T — MECHANICAL TIME SWITCH
- S_{LV} — LOW VOLTAGE SWITCH
- V OR S_V — VARIABLE SPEED MOTOR CONTROL SWITCH
- S_{CB} — CIRCUIT-BREAKER SWITCH - 20A1P
- OCCUPANCY SENSOR - CEILING MOUNTED
- OCCUPANCY SENSOR - WALL MOUNTED
- DATALINE OR LOW-VOLTAGE SWITCH
- DATALINE SWITCH - # = NUMBER OF BUTTONS
- LCD TOUCHSCREEN - X = SCREEN SIZE
- S_{TH} — THERMAL OVERLOAD SWITCH
- PUSH BUTTON
- EMERGENCY POWER-OFF SHUNT-TRIP
- BELL, CHIME, OR BUZZER
- TIME SWITCH - TORK (DIGITAL)
- PC OR — PHOTOCELL
- SWITCH AND RECEPTACLE GANGED TOGETHER
- HOOD CONNECTION
- THERMOSTAT
- MOTOR

ABBREVIATIONS

AC	ABOVE COUNTER
AFF	ABOVE FINISHED FLOOR
AFG	ABOVE FINISHED GRADE
AFI/AFCI	ARC-FAULT CIRCUIT INTERRUPTER
AIC	AMPERE INTERRUPTING CAPACITY (MINIMUM RATING)
ATS	AUTOMATIC TRANSFER SWITCH
CD	CORD DROP
CLG	CEILING MOUNTED
E OR (E)	EXISTING
FLR	FLOOR MOUNTED
G OR GND	GROUND
GFI/GFCI	GROUND-FAULT CIRCUIT INTERRUPTER
IG	ISOLATED GROUND
ISC	AVAILABLE FAULT CURRENT (RMS SYMMETRICAL)
ILT	LET-THROUGH FAULT CURRENT (RMS SYMMETRICAL)
N OR (N)	NEW
NO/NC	NORMALLY OPEN/NORMALLY CLOSED
O.C.	ON CENTER
R OR (R)	RELOCATE
ST	SHUNT-TRIP
TL	TWIST-LOCK
TR	TAMPER RESISTANT
UC	UNDER COUNTER
UON	UNLESS OTHERWISE NOTED
WP	WEATHER PROOF
XP	EXPLOSION PROOF

DESIGNATIONS

- X/X — MECHANICAL EQUIPMENT
- 1/A — REVISION TAG
- XX — DETAIL NOTE
- X — DETAIL NOTE
- XXX — KITCHEN EQUIPMENT

LIGHTING

- RECESSED FLUORESCENT
- SURFACE FLUORESCENT
- FLUORESCENT STRIP LIGHT
- LIGHT - TYPE INDICATED ON SCHEDULE
- LIGHT - TYPE INDICATED ON SCHEDULE
- TRACK LIGHT
- SURFACE MOUNTED FIXTURE
- OR — RECESSED FIXTURE
- OR — RECESSED WALL WASHER
- PENDANT MOUNTED FIXTURE
- O OR H — WALL MOUNTED FIXTURE
- KEYLESS PORCELAIN LAMP HOLDER - 150W
- BATTERY PACK EMERGENCY LIGHT
- REMOTE EMERGENCY LIGHT
- EGRESS — EXTERIOR EMERGENCY EGRESS LIGHT
- WEU — BATTERY PACK FOR REMOTE EMERGENCY LIGHT
- BATTERY PACK EXIT LIGHT
- BATTERY PACK EXIT/EM COMBINATION LIGHT
- OR NL — INDICATES NON-SWITCHED NIGHT LIGHT
- EM — INDICATES INTEGRAL EMERGENCY POWER BATTERY

UPPERCASE LETTER ADJACENT TO FIXT. INDICATES FIXTURE TYPE

LOWERCASE LETTER ADJACENT TO FIXT. INDICATES CONTROL

POWER DISTRIBUTION

- SWITCHBOARD OR EQUIPMENT ENCLOSURE
- ELECTRICAL PANEL
- SWITCH WITH FUSE
- SWITCH
- PULLOUT FUSED DISCONNECT
- CIRCUIT BREAKER
- M2 — CONTACT - NO - # INDICATES ASSOC. COIL
- M2 — CONTACT - NC - # INDICATES ASSOC. COIL
- M2 — COIL - # INDICATES ASSOCIATED CONTACT
- OVERLOAD RELAY
- KKI 2 — KIRK KEY INTERLOCK - # INDICATES RELATED KEYS
- TVSS — TRANSIENT VOLTAGE SURGE SUPPRESSER
- AC POWER SOURCE
- DC POWER SOURCE
- NF — NON-FUSED DISCONNECT SWITCH
- FUSED DISCONNECT SWITCH
- MAGNETIC STARTER OR CONTACTOR
- COMBINATION STARTER
- M OR M — ELECTRIC METER - UTILITY METER U.O.N.
- CT OR CT — CURRENT TRANSFORMER
- MOTOR
- TRANSFER SWITCH
- GENERATOR
- J/B OR J — JUNCTION BOX
- CIRCUIT RUN CONCEALED IN WALL OR CEILING
- CIRCUIT RUN IN OR UNDER FLOOR OR IN EARTH
- CIRCUIT RUN SURFACE MOUNTED
- CONDUIT UP, CONDUIT DOWN
- CONDUIT STUB - CAP IF UNDERGROUND
- FLEXIBLE CONNECTION TO EQUIPMENT
- OR — HOMERUN - ARROWS INDICATE # OF PHASE COND.
- GROUNDING ELECTRODE
- PAD MOUNTED TRANSFORMER
- OR T — TRANSFORMER
- OVERHEAD SERVICE ENTRANCE

PHONE/DATA

- DATA OUTLET
- TELEPHONE OUTLET
- COMBINATION TELEPHONE/DATA OUTLET
- FLUSH FLOOR OUTLET (DEVICE AS INDICATED)
- TELEPHONE TERMINAL BOARD
- TELEPHONE TERMINAL CABINET

ELECTRICAL SPECIFICATIONS

GENERAL REQUIREMENTS

DRAWINGS ARE DIAGRAMMATIC AND DO NOT INDICATE ALL FITTINGS, JUNCTION BOXES, ETC. REQUIRED. PROVIDE ALL REQUIRED EQUIPMENT, CONDUIT, FITTINGS, WIRING, BOXES, ETC. FOR A COMPLETE AND OPERATIONAL INSTALLATION.

WORK AND EQUIPMENT SHALL COMPLY WITH STATE AND LOCALLY ADOPTED CODES AND STANDARDS, INCLUDING THE NATIONAL ELECTRICAL CODE (NEC), INTERNATIONAL CODES (I-CODES), AND LOCAL AMENDMENTS.

ANYTHING DRAWN OR SPECIFIED SHALL NOT BE CONSTRUED TO CONFLICT WITH STATE AND LOCALLY ADOPTED CODES AND STANDARDS, INCLUDING THE NATIONAL ELECTRICAL CODE, WHICH GOVERNS THE INSTALLATION OF ANY ELECTRICAL WORK. ITEMS SHALL NOT BE INSTALLED IN CONFLICT WITH THE NEC. RESOLVE ANY AND ALL CONFLICTS PRIOR TO INSTALLATION.

BECOME THOROUGHLY ACQUAINTED WITH THE CONDITIONS UNDER WHICH WORK IS TO BE PERFORMED. EXAMINE ALL SERVICES, EQUIPMENT, AND EXISTING CONDITIONS, WHICH THIS WORK IS IN ANY WAY DEPENDENT UPON, AND BRING ANY DISCREPANCIES OR OMISSIONS FOUND IN THE DRAWINGS TO THE ELECTRICAL ENGINEER'S ATTENTION PRIOR TO SUBMITTING BID.

THE LOCATION OF OUTLETS AND EQUIPMENT SHOWN ON THE DRAWINGS ARE APPROXIMATE. THE ARCHITECT AND ENGINEER SHALL HAVE THE RIGHT TO ADJUST THE LOCATION OF OUTLETS OR FIXTURES, WITHIN 10' OF THE SPECIFIED LOCATION, BEFORE THEY ARE INSTALLED AND WITHOUT ADDITIONAL COST.

PROVIDE DRAWINGS TO LOCAL BUILDING AUTHORITY AND OBTAIN A PERMIT PRIOR TO STARTING ANY WORK.

NOTIFY ELECTRICAL ENGINEER OF ANY CHANGES REQUESTED BY THE LOCAL BUILDING AUTHORITY IMMEDIATELY AND PRIOR TO STARTING WORK.

VERIFY AND COMPLY WITH UTILITY COMPANY REQUIREMENTS. PROVIDE METERING, CONNECTION CABINETS, CT CABINETS, AND TRANSFORMER AND CONNECTION CABINET PADS PER LOCAL UTILITY COMPANY REQUIREMENTS.

PROVIDE A REDLINED AS-BUILT SET OF ELECTRICAL DRAWINGS TO OWNER UPON COMPLETION OF WORK.

ELECTRICAL WORK SHOWN LIGHT OR MARKED "E" IS EXISTING, SHOWN DARK IS NEW, AND SHOWN DASHED IS EXISTING TO BE REMOVED OR RELOCATED UNLESS OTHERWISE INDICATED. DASHING MAY ALSO INDICATE UNDER FLOOR OR UNDER GROUND CONDUIT. IF UNCLEAR, CONTACT ELECTRICAL ENGINEER FOR CLARIFICATION.

EQUIPMENT, WIRING, AND DEVICES SHOWN ARE NEW UNLESS OTHERWISE NOTED.

MAINTAIN CIRCUITING TO EXISTING EQUIPMENT AND DEVICES TO REMAIN.

REFERENCE ARCHITECTURAL DRAWINGS FOR ADDITIONAL INFORMATION.

INSTALL EQUIPMENT AND DEVICES PER THE MANUFACTURER'S INSTALLATION INSTRUCTIONS. NOTIFY ELECTRICAL ENGINEER PRIOR TO INSTALLING EQUIPMENT AND DEVICES, IF MANUFACTURER'S INSTALLATION INSTRUCTIONS CONFLICT WITH ELECTRICAL INFORMATION ON THE THESE DRAWINGS.

ELECTRICALLY OPERATED EQUIPMENT SHOWN ON PLANS, AND NOT CIRCUITED ON THE ELECTRICAL PLANS, WILL REQUIRE ELECTRICAL SERVICE. CONTACT ELECTRICAL ENGINEER FOR CONNECTION REQUIREMENTS AND CLARIFICATION PRIOR TO BID. THE COST FOR THIS WORK SHALL BE INCLUDED IN THE BID.

PROVIDE HANGERS AND SUPPORTS TO ADEQUATELY AND SECURELY SUPPORT ELECTRICAL SYSTEM COMPONENTS IN A NEAT AND WORKMANLIKE MANNER.

MAINTAIN THE FIRE RATING OF THE ASSEMBLY (CEILING, WALL, OR FLOOR) IN WHICH EQUIPMENT, WIRING, AND DEVICES ARE TO BE INSTALLED.

SUBMITTALS AND SUBSTITUTIONS

PROVIDE PRODUCT DATA SHEETS AND SHOP DRAWINGS FOR EQUIPMENT, FIXTURES, AND DEVICES TO ELECTRICAL ENGINEER PRIOR TO PURCHASING. REVIEW, STAMP AND INITIAL ALL ELECTRICAL SUBMITTALS AND SHOP DRAWINGS CERTIFYING THAT THE SUBMITTALS HAVE BEEN REVIEWED PRIOR TO SUBMITTING TO ELECTRICAL ENGINEER FOR REVIEW.

EQUIPMENT AND FIXTURES SPECIFIED REPRESENT REQUIRED QUALITY AND PERFORMANCE.

PROVIDE PRODUCT DATA SHEETS AND SHOP DRAWING OF PROPOSED SUBSTITUTIONS TO SPECIFIED EQUIPMENT TO ELECTRICAL ENGINEER FOR REVIEW. ELECTRICAL ENGINEER SHALL DETERMINE THE ACCEPTABILITY OF SUBSTITUTIONS TO SPECIFIED EQUIPMENT. REVIEW, STAMP AND INITIALED ALL ELECTRICAL SUBMITTALS AND SHOP DRAWINGS CERTIFYING THAT SUBMITTALS HAVE BEEN REVIEWED PRIOR TO SUBMITTING TO ELECTRICAL ENGINEER FOR REVIEW.

SUBMITTALS AND SHOP DRAWINGS ARE TO INCLUDE THE FOLLOWING: KEY TO PLAN DESIGNATIONS, MANUFACTURER, MODEL NUMBER, DATA SHEETS, QUANTITIES, COLORS, LABELS, DIMENSIONS, INSTALLATION INSTRUCTIONS, AND ANY ADDITIONAL INFORMATION REQUIRED TO DETERMINE IF THE PRODUCT MEETS THE DESIGN INTENT.

CONSTRUCTION PHASE REVIEW REQUIREMENTS

INSTALL POWER, LIGHTING, COMMUNICATIONS AND SPECIAL SYSTEM (FIRE ALARM, SECURITY, BUILDING AUTOMATION, ETC) BOXES PRIOR TO RUNNING CABLE OR CONDUIT TO BOXES. ARRANGE FOR OWNER, ARCHITECT, AND ENGINEER TO REVIEW BOX LOCATIONS PRIOR TO RUNNING CABLE OR CONDUIT TO BOXES. ADJUST BOXES AS DIRECTED BY OWNER, ARCHITECT, AND ENGINEER.

REQUESTS FOR MODIFICATIONS TO THE CONTRACT (CHANGE ORDERS)

REQUESTS BY CONTRACTOR FOR ADDITION OR REDUCTION TO THE CONTRACT AMOUNT SHALL BE ACCOMPANIED BY THE FOLLOWING FOR EVALUATION BY THE OWNER AND ENGINEER:

1. ORIGIN AND DATE OF CLAIM
2. QUANTITIES OF PRODUCTS, LABOR, AND EQUIPMENT
3. DOLLAR AMOUNT OF TAXES, OVERHEAD, AND PROFIT
4. JUSTIFICATION FOR ANY CHANGE IN CONTRACT TIME
5. CREDIT AMOUNT FOR DELETIONS (WITH DOCUMENTATION)
6. DATES AND TIMES OF WORK PERFORMED, AND BY WHOM
7. TIME RECORDS AND WAGE RATES PAID
8. INVOICES AND RECEIPTS FOR PRODUCTS AND EQUIPMENT

SUBMIT ALL DOCUMENTATION TO ENGINEER AND OWNER, AND OBTAIN WRITTEN APPROVAL PRIOR TO STARTING ANY WORK THAT AFFECTS THE CONTRACT AMOUNT OR COMPLETION DATE.

EXISTING CONDITIONS

THESE DRAWINGS CONTAIN INFORMATION REGARDING EXISTING CONDITIONS. THIS INFORMATION WAS COMPILED FROM EXISTING DRAWINGS OR CASUAL FIELD OBSERVATIONS. IN SOME CASES, ASSUMPTIONS WERE MADE WHEN FIELD OBSERVATIONS OR EXISTING DRAWINGS DID NOT PROVIDE NECESSARY INFORMATION (I.E. LOCKED DISCONNECTS, NO WIRE SIZE INDICATED, NAMEPLATE DATA MISSING, INACCURATE AS-BUILT DRAWINGS, ETC.).

EXISTING CONDITIONS SHALL BE VERIFIED AND ALLOWED FOR PRIOR TO BID AND CONSTRUCTION. NOTIFY THE ELECTRICAL ENGINEER OF ANY DISCREPANCIES WITH THESE DRAWINGS IMMEDIATELY AND PRIOR TO COMMENCING ANY FURTHER WORK.

COORDINATION

THE ELECTRICAL DRAWINGS ARE ONLY ONE PART OF A COMPLETE SET OF CONSTRUCTION DOCUMENTS. EXAMINE THE ARCHITECTURAL, MECHANICAL, AND PLUMBING DRAWINGS PRIOR SUBMITTING BID AND STARTING WORK TO DETERMINE THE FULL EXTENT OF ELECTRICAL WORK REQUIRED.

COORDINATE WORK WITH OTHER TRADES PRIOR TO ROUGH-IN. COORDINATION SHALL INCLUDE REVIEWING THE ARCHITECTURAL, MECHANICAL, PLUMBING, ETC. DRAWINGS AND SHOP DRAWINGS PRIOR TO BID AND CONSTRUCTION.

OBTAIN AND REVIEW SHOP DRAWINGS, PRODUCT DATA, MANUFACTURER'S WIRING DIAGRAMS AND MANUFACTURER'S INSTRUCTIONS FOR EQUIPMENT PROVIDED BY OTHERS.

THE FINAL LOCATION OF EQUIPMENT SHALL BE COORDINATED IN THE FIELD, PRIOR TO ROUGH-IN, TO MEET APPLICABLE LOCATION, HEIGHT AND CLEARANCE REQUIREMENTS.

DEMOLITION

DISCONNECT WIRING TO EQUIPMENT, DEVICES, AND FIXTURES TO BE REMOVED. REMOVE EQUIPMENT, WIRING, DEVICES AND CONDUIT NOT BEING USED. FIELD VERIFY EXISTING CONDITIONS TO DETERMINE EXTENT OF DEMOLITION WORK. REFERENCE ARCHITECTURAL, MECHANICAL, AND ELECTRICAL PLANS FOR ADDITIONAL INFORMATION.

MAINTAIN THE ELECTRICAL SERVICE TO EXISTING EQUIPMENT AND DEVICES TO REMAIN.

MAINTAINING EXISTING SERVICES

MAINTAIN THE ELECTRICAL SERVICE TO EXISTING TENANTS AND AREAS. ANY SERVICE DISCONTINUITY SHALL BE COORDINATED AND APPROVED BY OWNER AND TENANT'S PRIOR TO OUTAGE. IF REQUIRED, PROVIDE TEMPORARY POWER DURING OUTAGE.

WIRING AND CONDUIT

NEW WIRING SHALL BE THHN/THWN -2, 90°C INSULATED COPPER UNLESS OTHERWISE NOTED. ALUMINUM CONDUCTORS SHALL BE XHHW-2, INSULATED COMPACT STRAND.

THE CONDUCTORS FOR 15A AND 20A BRANCH CIRCUITS SHALL BE #12 THHN/THWN-2, 90°C INSULATED COPPER.

BRANCH-CIRCUIT CONDUCTORS GREATER THAN 20A SHALL BE AS INDICATED ON PLANS OR REQUIRED PER CODE.

CONDUCTOR INSULATION SHALL BE COLOR CODED AS FOLLOWS:
208/120V, 3Ø: PHASE: A - BLACK; PHASE B - RED; PHASE C - BLUE
480/277V, 3Ø: PHASE A - BROWN; PHASE B - ORANGE; PHASE C - YELLOW

20 AMPERE BRANCH CIRCUIT HOMERUNS OVER 75' SHALL BE #10AWG CU AND OVER 150' SHALL BE #8AWG CU.

THE MAXIMUM NUMBER OF CONDUCTORS IN A CONDUIT FOR A 3Ø SYSTEM SHALL BE THREE (AØ, BØ, CØ), NOT INCLUDING NEUTRAL AND EQUIPMENT GROUNDING CONDUCTORS, UNLESS OTHERWISE INDICATED. CONDUIT SIZE SHALL BE BASED UPON NEC CHAPTER 9 AND ANNEX C. MORE THAN 3 CURRENT-CARRYING CONDUCTORS MAY BE INSTALLED IN A RACEWAY IF THE APPROPRIATE AMPACITY-DERATING FACTORS ARE APPLIED.

PROVIDE A DEDICATED NEUTRAL FOR EACH LINE-TO-NEUTRAL CIRCUIT UNLESS A MULTI-POLE BREAKER, WHICH DISCONNECTS ALL PHASE CONDUCTORS THAT SHARE A NEUTRAL, IS PROVIDED (LISTED BREAKER-TIES ARE PERMITTED) .

PROVIDE AN INSULATED EQUIPMENT GROUNDING CONDUCTOR WITH ALL FEEDERS AND BRANCH-CIRCUIT WIRING.

INCREASE CONDUIT SIZE AS REQUIRED TO ACCOMMODATE EQUIPMENT GROUNDING CONDUCTOR.

CONDUIT SHALL BE CONCEALED IN WALLS, FLOOR OR CEILING IN FINISHED AREAS UNLESS OTHERWISE INDICATED.

IN FINISHED AREAS, WHERE CONDUIT AND CABLE CAN NOT BE CONCEALED IN WALLS OR CEILINGS (I.E. EXISTING MASONRY CONSTRUCTION), PROVIDE WIREMOLD OR EQUAL SURFACE MOUNTED RACEWAY AS APPROVED BY ARCHITECT OR ENGINEER.

THE TYPE OF CONDUIT SHALL BE AS FOLLOWS FOR ALL FEEDERS AND BRANCH CIRCUITS, UNLESS OTHERWISE SPECIFIED OR REQUIRED. REFERENCE THE NEC FOR ADDITIONAL APPLICATION REQUIREMENTS.

APPLICATION	TYPE OF CONDUIT
IN CONCRETE OR MASONRY	EMT, GRC OR PVC
OUTDOORS (ABOVE GRADE)	EMT OR GRC
BRANCH CIRCUITS (EXPOSED)	EMT OR GRC
BRANCH CIRCUITS (CONCEALED)	MC CABLE OR EMT
BRANCH CKTS (CONCEALED IN PATIENT CARE AREAS)	HCFAC OR EMT
SUPPLY TO DISTRIBUTION PANELS	EMT OR GRC

FINAL CONNECTIONS TO MECHANICAL OR VIBRATING EQUIPMENT, SUCH AS MOTORS AND TRANSFORMERS, SHALL BE MADE WITH FLEXIBLE METAL CONDUIT. FINAL CONNECTIONS TO LIGHT FIXTURES SHALL BE MADE WITH FLEXIBLE METAL CONDUIT WITH A MAXIMUM LENGTH OF 6'.

INSTALL CONDUIT EXPOSED TO SUNLIGHT ON ROOFTOPS A MINIMUM OF 12" ABOVE ROOF SURFACE.

PROVIDE PVC COATED GRC FOR ELBOWS IN PVC CONDUIT RUNS.

ALL CONDUITS AND CABLES PASSING THROUGH RATED WALLS, FLOORS OR CEILINGS SHALL BE FIRE STOPPED WITH APPROVED FIRE BARRIER CAULK. INSTALL CAULK PER MANUFACTURE'S INSTRUCTIONS AND MAINTAIN THE RATING OF THE WALL, FLOOR, OR CEILING BEING PENETRATED.

MEDICAL/DENTAL OFFICE REQUIREMENTS

INSTALL BRANCH CIRCUIT WIRING IN PATIENT CARE AREAS IN A METAL RACEWAY SYSTEM. CABLE USED IN PATIENT CARE AREAS SHALL BE LISTED FOR SUCH USE (HCFAC).

PROVIDE AN INSULATED COPPER EQUIPMENT GROUNDING CONDUCTOR TO ALL RECEPTACLES, LIGHTS, AND EQUIPMENT IN PATIENT CARE AREAS.

IF EXISTING, RELOCATED, OR RECONNECTED RECEPTACLES, LIGHTING, OR SWITCHES ARE LOCATED IN A PATIENT CARE AREA, AND THE WIRING IS NOT INSTALLED IN A METAL RACEWAY WITH AN INSULATED EQUIPMENT GROUNDING CONDUCTOR, OR A CABLE LISTED FOR USE IN A HEALTH-CARE FACILITY, THEN RECIRCUIT THE EXISTING DEVICES WITH THE REQUIRED GROUNDING FOR A PATIENT CARE AREA.

VERIFY EQUIPMENT NAMEPLATE DATA (VOLTAGE, PHASE, FLA, MCA, MOCP, ETC.) OF EQUIPMENT PRIOR TO ROUGH-IN. NOTIFY ELECTRICAL ENGINEER OF ANY DISCREPANCIES WITH THESE DRAWINGS.

DEVICES

DEVICE AND FACEPLATE COLOR SHALL BE AS SPECIFIED BY THE ARCHITECT OR TO MATCH EXISTING. COORDINATE FACEPLATE AND DEVICE COLORS WITH ARCHITECT, INTERIOR DESIGNER AND OWNER PRIOR TO PURCHASING AND INSTALLING DEVICES AND FACEPLATES.

PROVIDE HEAVY-DUTY GRADE SWITCHES AND RECEPTACLES.

PROVIDE DEVICES AS INDICATED BELOW.

DEVICE	MANUFACTURER	MODEL NUMBER
WALL OCCUPANCY SENSOR	WATT STOPPER	DW-100
CLG OCCUPANCY SENSOR	WATT STOPPER	WT ULTRASONIC WITH BZ150

PROVIDE GFI PROTECTION FOR 120V, 15A AND 20A RECEPTACLES INSTALLED IN THE FOLLOWING NON-DWELLING LOCATIONS: BATHROOMS, KITCHENS, ROOFTOPS, OUTDOORS, SINKS (WITHIN 6' OF OUTSIDE EDGE OF SINK), FEEDING ELECTRIC WATER COOLERS, AND LOCATIONS INDICATED ON POWER PLAN.

PROVIDE WEATHER-RESISTANT RECEPTACLES FOR RECEPTACLES INSTALLED IN DAMP OR WET LOCATIONS.

PROVIDE HUBBELL RECEPTACLES WITH THE APPROPRIATE NEMA CONFIGURATION FOR RECEPTACLES SHOWN ON THE ELECTRICAL PLAN.

PROVIDE 6' CORD AND PLUG FOR SPECIAL-PURPOSE RECEPTACLES IF EQUIPMENT TO BE INSTALLED IS NOT SUPPLIED WITH A CORD AND PLUG.

PROVIDE FLOOR-MOUNTED DEVICE COVERS MOUNTED FLUSH WITH THE FINISHED FLOOR SURFACE.

PROVIDE WIRING DEVICES AS MANUFACTURED BY HUBBELL, PASS AND SEYMOUR, LEVITION, WATT-STOPPER, LUTRON OR EQUAL.

COORDINATE MOUNTING HEIGHTS OF SWITCHES, RECEPTACLES, PHONE OUTLETS, DATA OUTLETS, TV OUTLETS, AND LIGHT FIXTURES WITH ARCHITECTURAL DRAWINGS.

THE MOUNTING HEIGHT FOR DEVICES SHALL BE AS INDICATED BELOW, UNLESS OTHERWISE NOTED. MOUNTING HEIGHTS ARE TO CENTER OF DEVICE, UNLESS OTHERWISE NOTED. MATCH MOUNTING HEIGHT OF EXISTING DEVICES IF APPLICABLE.

GENERAL RECEPTACLES (COMMERCIAL) @18" AFF
ABOVE COUNTER RECEPTACLES AND SWITCHES @ 2" ABOVE COUNTER OR BACKSPLASH TO BOTTOM OF DEVICE (COORDINATE WITH ARCHITECT)
LIGHT SWITCHES @ 48" AFF
LIGHT SWITCHES IN BATHROOMS @ 44" AFF
TELEPHONE OUTLETS @ 18" AFF
TELEPHONE OUTLET (WALL MOUNTED) 54" AFF
CLOCK OUTLETS @ 7'-6" AFF
TV OUTLETS (COMMERCIAL) @ 18" AFF
DAT/APHONE OUTLETS (COMMERCIAL) @ 18" AFF

PROVIDE "IN-USE" WEATHERPROOF COVER FOR EXTERIOR RECEPTACLES.

COMPLY WITH ADA STANDARDS FOR MOUNTING HEIGHTS AND LOCATIONS.

DEVICES IN THE SAME LOCATION AND AT THE SAME MOUNTING HEIGHT SHALL BE MOUNTED UNDER A COMMON WALL PLATE.

DISTRIBUTION EQUIPMENT

PROVIDE DISTRIBUTION PANELS, DISCONNECTS, CONTACTORS, ETC. OF VOLTAGE, AMPERAGE, PHASE, AND SHORT-CIRCUIT RATINGS AS INDICATED ON PLANS.

FUSES SPECIFIED ARE AS MANUFACTURED BY BUSSMANN. THE SAME CLASS OF FUSE AS MANUFACTURED BY LITTELFUSE AND GOULD-SHAWMUT MAY BE SUBSTITUTED.

PROVIDE A LISTED BREAKER-TIE OR MULTI-POLE BREAKER FOR EACH MULTIWIRE (SHARED NEUTRAL) BRANCH CIRCUIT.

PROVIDE A TYPED PANEL SCHEDULE WITH LOAD DESCRIPTIONS FOR PANELS AFFECTED BY THIS PROJECT.

MECHANICAL EQUIPMENT

REFERENCE MECHANICAL DRAWINGS FOR EXACT LOCATION AND REQUIREMENTS OF MECHANICAL EQUIPMENT.

ELECTRICALLY OPERATED EQUIPMENT SHOWN ON THE MECHANICAL PLANS AND NOT SHOWN ON THE ELECTRICAL PLANS WILL REQUIRE ELECTRICAL SERVICE. CONTACT ELECTRICAL ENGINEER FOR CONNECTION REQUIREMENTS PRIOR TO BID. THE COST FOR THIS WORK SHALL BE INCLUDED IN THE BID.

VERIFY MECHANICAL EQUIPMENT NAMEPLATE DATA (VOLTAGE, PHASE, FLA, MCA, MOCP, ETC.) PRIOR TO ROUGH-IN. NOTIFY ELECTRICAL ENGINEER IN WRITING OF ANY DISCREPANCIES WITH THESE DRAWINGS IMMEDIATELY AND PRIOR TO COMMENCING ANY FURTHER WORK.

MECHANICAL CONTRACTOR SHALL PROVIDE STARTERS FOR MECHANICAL EQUIPMENT.

MECHANICAL CONTRACTOR SHALL PROVIDE CONDUIT, WIRE, AND DEVICES FOR MECHANICAL EQUIPMENT CONTROLS, UNLESS OTHERWISE INDICATED ON THE ELECTRICAL DRAWINGS.

ELECTRICAL CONTRACTOR SHALL PROVIDE MECHANICAL EQUIPMENT CONTROL WIRING, CONDUIT, AND DEVICES IF INDICATED ON THE ELECTRICAL DRAWINGS. NOTIFY ELECTRICAL ENGINEER IN WRITING OF ANY DISCREPANCIES WITH THESE DRAWINGS IMMEDIATELY AND PRIOR TO COMMENCING ANY FURTHER WORK.

REFERENCE MECHANICAL DRAWINGS FOR LOCATIONS OF FIRE SMOKE DAMPERS AND CONTROL REQUIREMENTS OF MECHANICAL EQUIPMENT. PROVIDE 120V TO FIRE SMOKE DAMPERS AND PROVIDE EITHER DUCT OR SMOKE DETECTORS AS REQUIRED. CONNECT DETECTORS TO FIRE ALARM SYSTEM IF APPLICABLE. MECHANICAL (RETURN AIR) UNITS OVER 2000CFM REQUIRE A SMOKE DETECTOR TO SHUT UNIT OFF UPON ACTIVATION OF SMOKE DETECTOR. CONNECT DETECTORS TO FIRE ALARM SYSTEM IF APPLICABLE.

TELEPHONE, DATA, AND CABLE OUTLETS

PROVIDE A 4"X4" JUNCTION BOX WITH SINGLE-GANG PLASTER RING AND A 3/4" CONDUIT WITH PULL STRING TO NEAREST ACCESSIBLE CEILING SPACE FOR EACH WALL MOUNTED PHONE, DATA, AND CABLE OUTLET.

PROVIDE A FLUSH FLOOR BOX WITH FLUSH FACE PLATE AND A 3/4" CONDUIT WITH PULL STRING TO NEAREST ACCESSIBLE CEILING SPACE FOR EACH FLOOR MOUNTED PHONE, DATA, AND CABLE OUTLET.

LIGHTING

THE MOUNTING HEIGHT FOR LIGHT FIXTURES SHALL BE AS INDICATED ON THE FIXTURE SCHEDULE, ARCHITECTURAL ELEVATIONS, OR AS SHOWN BELOW, UNLESS OTHERWISE NOTED. MATCH MOUNTING HEIGHT OF EXISTING LIGHT FIXTURES IF APPLICABLE.

INSTALL EXIT AND EMERGENCY LIGHTS @ 6" BELOW CEILING TO TOP OF FIXTURE WITH A MAXIMUM MOUNTING HEIGHT OF10' AFF.

PROVIDE A DEDICATED NEUTRAL CONDUCTOR FOR EACH LIGHTING CIRCUIT.

MAKE CONNECTIONS TO LIGHT FIXTURES USING BUILDING WIRE WITH INSULATION SUITABLE FOR TEMPERATURE CONDITIONS WITHIN THE LUMINAIRE.

FIRE/SPRINKLER ALARM AND DETECTION SYSTEM

PROVIDE MODIFICATIONS AND EXTENSIONS TO THE EXISTING FIRE ALARM AND DETECTION SYSTEM.

ALARM AND DETECTION SYSTEM SHALL BE DESIGN/BUILD. PROVIDE ALL COMPONENTS NECESSARY FOR A COMPLETE AND OPERATIONAL SYSTEM, REGARDLESS OF WHETHER SHOWN IN THE CONTRACT DOCUMENTS OR NOT.

ALARM AND DETECTION SYSTEM SHOP DRAWINGS SHALL BE PREPARED BY THE SYSTEM SUPPLIER AND SIGNED AND SEALED BY A COLORADO LICENSED PROFESSIONAL ENGINEER. SHOP DRAWINGS SHALL INCLUDE DEVICE LOCATIONS, WIRING DIAGRAM, EQUIPMENT SPECIFICATIONS, BATTERY CALCULATIONS, VOLTAGE DROP CALCULATIONS, SEQUENCE OF OPERATION AND OTHER DETAILS REQUIRED BY THE LOCAL BUILDING DEPARTMENT, IFC AND NFPA 72 WITH LOCAL AMENDMENTS. THE SYSTEM SHALL BE DESIGNED IN ACCORDANCE WITH THE REQUIREMENTS OF THE IBC, IFC, NFPA 72 AND LOCAL CODES AND ORDINANCES. SHOP DRAWINGS SHALL BE SUBMITTED TO THE BUILDING DEPARTMENT AND FIRE DEPARTMENT AS A DEFERRED SUBMITTAL. SHOP DRAWINGS SHALL BE APPROVED PRIOR TO PURCHASING ANY EQUIPMENT OR STARTING ANY WORK.

This sheet of drawings has not been reviewed for code compliance.

10-468729

Kazin & Associates
Consulting Electrical Engineers
Est. 1984
Villas Square at Lone Tree
9364 Teddy Lane Suite 101, Lone Tree, CO 80124-2873
(720) 489-1609 • Fax (720) 489-1611
© 2010
Project Number: 10103

1400 Potomac
1400 Potomac
Aurora, Colorado
Level Two - Suite #240

Colorado ENT Specialists
Remodel Expansion

Dates of Record

26 FEB 2010 ***Project Start Date***

Issued On:	Issued For:
4/30/10	PERMIT/CONSTRUCTION

Sheet Contents: NOTES & LEGEND
Project Team
Project Number
Sheet Mark: **2E.1**

NO NEW Breakers Added!

| | | |

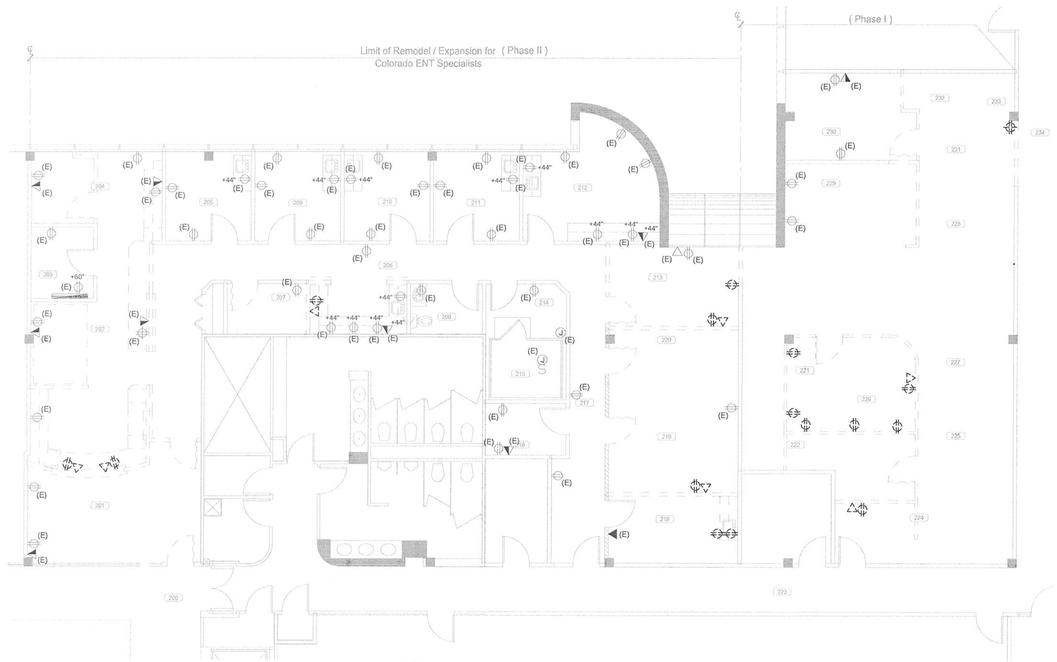

1 EXISITNG/DEMO POWER PLAN
SCALE: 1/8" = 1'-0"

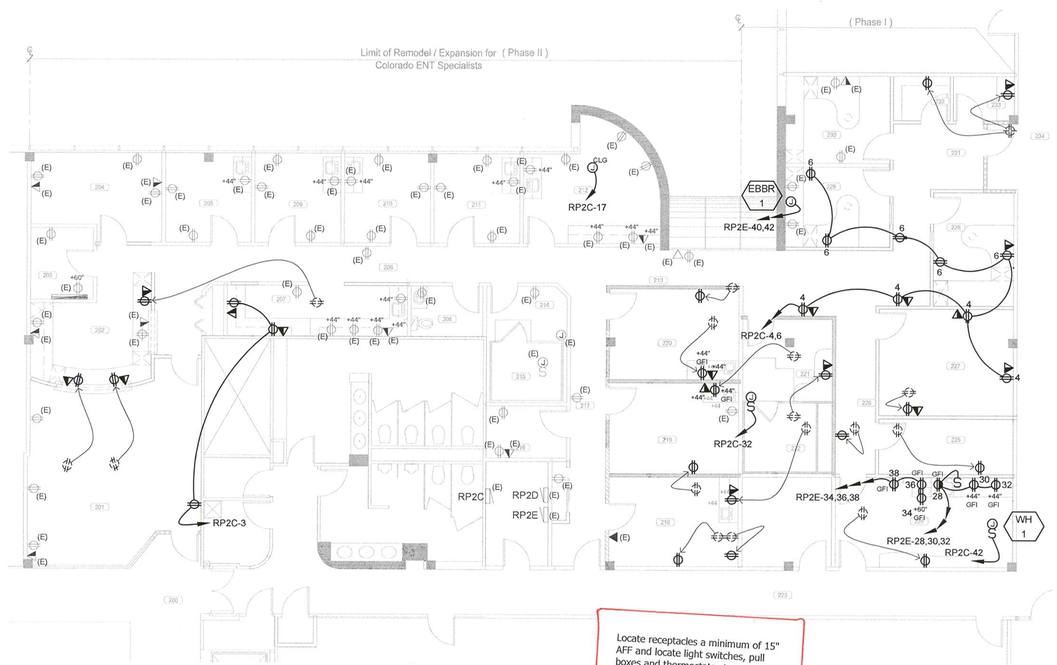

3 POWER PLAN
SCALE: 1/8" = 1'-0"

Locate receptacles a minimum of 15" AFF and locate light switches, pull boxes and thermostats etc. a maximum of 44" AFF per ANSI A117.1 308.

AURORA BUILDING INSPECTION
ELECTRICAL SECTION
APPROVED
SUBJECT TO COMMENTS AS NOTED
AND FIELD INSPECTIONS

Install electrical connections per 2008 NEC 110-14, identify disconnects per 2008 NEC 110-22 and provide working space around electrical equipment per 2008 NEC 110-26.

CITY OF AURORA
BUILDING DIVISION
APPROVED AS NOTED LT
DATE 5/6/10
'06 Lighting compliance attached (3 pages)

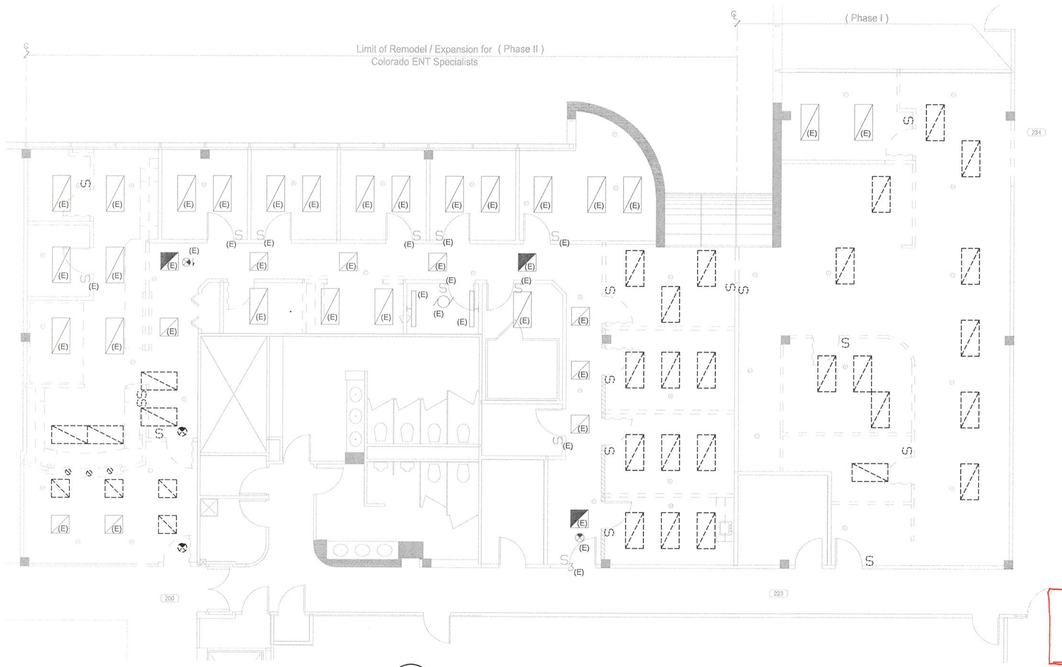

2 EXISITNG/DEMO LIGHTING PLAN
SCALE: 1/8" = 1'-0"

This work must also comply with 2006 IECC.

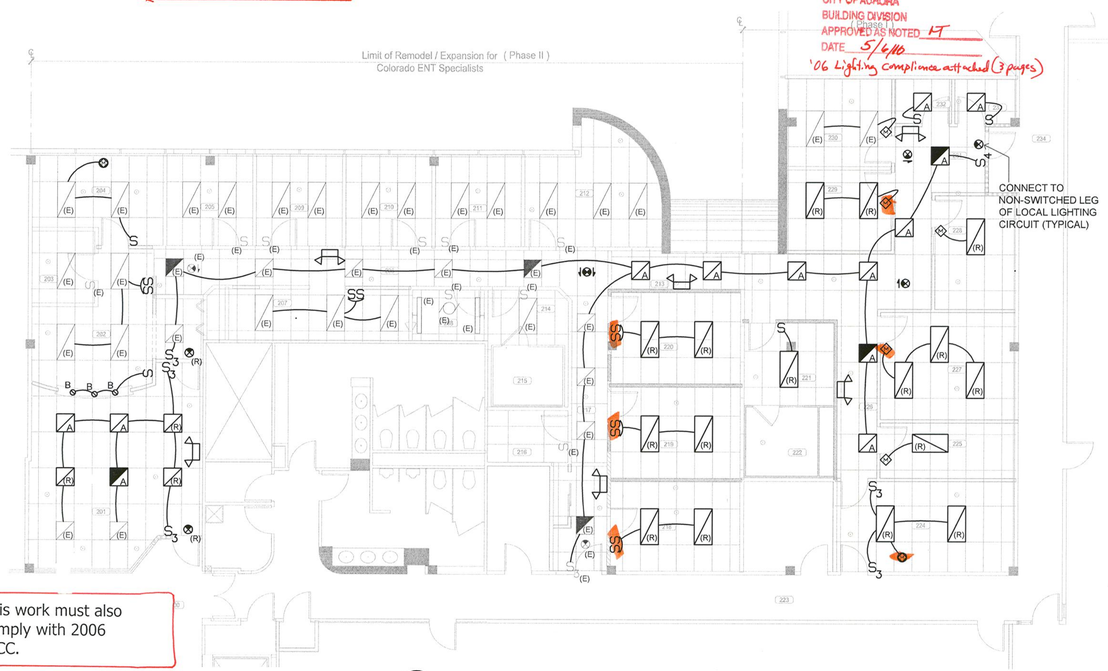

4 LIGHTING PLAN
SCALE: 1/8" = 1'-0"

NOTES:

1. CONNECT EXISTING, RELOCATED AND NEW FLUORESCENT LIGHTING TO EXISTING 277V, 20A LIGHTING CIRCUITS IN SPACE, WITH NO MORE THAN 4000VA PER CIRCUIT. PROVIDE SWITCHING FUNCTION AS INDICATED.

10-468729

Kazin & Associates
Consulting Electrical Engineers
Est. 1984
KAZIN & ASSOCIATES
Village Square at Lone Tree
9364 Teddy Lane Suite 101, Lone Tree, CO 80124-2873
(720) 489-1609 • Fax (720) 489-1611
© 2010
Project Number 10103

1400 Potomac
1400 Potomac
Aurora, Colorado
Level Two - Suite #240

REGISTERED PROFESSIONAL ENGINEER
EDWARD J. KAZIN
36828
5/3/10

Colorado ENT Specialists Remodel Expansion

Dates of Record
26 FEB 2010 Project Start Date

Issued On: 4/30/10 Issued For: PERMIT/CONSTRUCTION

Sheet Contents: POWER & LIGHTING
Project Team
Project Number
Sheet Mark: 2E.3

COM*check* Software Version 3.6.1

Interior Lighting Compliance Certificate

2006 IECC

Section 1: Project Information

Project Type: **New Construction**
Project Title : Colorado ENT

Construction Site:
1400 Potomac, Suite 240
Aurora, CO

Owner/Agent:

Designer/Contractor:
Kazin & Associates
9364 Teddy Lane, Suite 101
Lone Tree, CO 80124
720-489-1609
bkazin@dmka.com

Section 2: General Information

Building Use Description by: **Activity Type**

Activity Type(s)	Floor Area
Healthcare-Clinic	4091

Section 3: Requirements Checklist

Interior Lighting:

☑ 1. Total proposed watts must be less than or equal to total allowed watts.

Allowed Watts	Proposed Watts	Complies
4091	3710	YES

Controls, Switching, and Wiring:

☑ 2. Independent controls for each space (switch/occupancy sensor).
Exceptions:

Areas designated as security or emergency areas that must be continuously illuminated.

Lighting in stairways or corridors that are elements of the means of egress.

☐ ~~3. Master switch at entry to hotel/motel guest room.~~

☐ ~~4. Individual dwelling units separately metered.~~

☑ 5. Each space provided with a manual control to provide uniform light reduction by at least 50%.
Exceptions:

Only one luminaire in space;

An occupant-sensing device controls the area;

The area is a corridor, storeroom, restroom, public lobby or sleeping unit.

Areas that use less than 0.6 Watts/sq.ft.

2010468729

☐ ~~6. Automatic lighting shutoff control in buildings larger than 5,000 sq.ft.~~
Exceptions:

Sleeping units, patient care areas; and spaces where automatic shutoff would endanger safety or security.

☐ ~~7. Photocell/astronomical time switch on exterior lights.~~
Exceptions:

Lighting intended for 24 hour use.

☑ 8. Tandem wired one-lamp and three-lamp ballasted luminaires (No single-lamp ballasts).
Exceptions:

Electronic high-frequency ballasts; Luminaires on emergency circuits or with no available pair.

Section 4: Compliance Statement

Compliance Statement: The proposed lighting design represented in this document is consistent with the building plans, specifications and other calculations submitted with this permit application. The proposed lighting system has been designed to meet the 2006 IECC requirements in COM*check* Version 3.6.1 and to comply with the mandatory requirements in the Requirements Checklist.

Name - Title	Signature	Date
BRYAN KAZIN		



2010468729

COM*check* Software Version 3.6.1

Interior Lighting Application Worksheet

2006 IECC

Section 1: Allowed Lighting Power Calculation

A Area Category	B Floor Area (ft2)	C Allowed Watts / ft2	D Allowed Watts (B x C)
Healthcare-Clinic	4091	1	4091
		Total Allowed Watts =	4091

Section 2: Proposed Lighting Power Calculation

A Fixture ID : Description / Lamp / Wattage Per Lamp / Ballast	B Lamps/ Fixture	C # of Fixtures	D Fixture Watt.	E (C X D)
Healthcare-Clinic (4091 sq.ft.)				
Linear Fluorescent 1: (E) 2' X 4' FLUORESCENT: 48" T12 40W / Electronic	3	22	128	2816
Linear Fluorescent 1 copy 1: (E) 2' X 4' FLUORESCENT: EXAM/PROCEDURE LIGHTING / 48" T12 40W / Electronic Exemption:Special Medical/Dental/Research	3	17	128	Exempt
Linear Fluorescent 2: (E) 2' X 2' FLUORESCENT: 24" T8 17W / Electronic	3	3	51	153
Linear Fluorescent 2 copy 1: A: 2' X 2' FLUORESCENT / 24" T8 17W / Electronic	3	13	51	663
Compact Fluorescent 1: B: DOWNLIGHT / Quad 2-pin 26W / Electronic	1	3	26	78
			Total Proposed Watts =	3710

Section 3: Compliance Calculation

If the Total Allowed Watts minus the Total Proposed Watts is greater than or equal to zero, the building complies.

Total Allowed Watts =	4091
Total Proposed Watts =	3710
Project Compliance =	381

Interior Lighting PASSES: Design 9% better than code.

2010468729