Johnson Controls

THE MEDICAL CENTER OF AURORA - SOUTH CAMPUS
CT 1 AND RAD ROOM 5
MODIFICATION TO EXISTING FIRE ALARM SYSTEM

DRAWING INDEX

Sheet List Table

Sheet Number	Sheet Title
General Information (FA-000 Series)	
FA-001	COVER SHEET
Floorplans (FA-100 Series)	
△2 △1 FA-101	1ST FLOOR INTERIM PARTIAL DEVICE PLACEMENT PLAN
△1 FA-102	1ST FLOOR BUILDOUT PARTIAL DEVICE PLACEMENT PLAN
Risers (FA-200 Series)	
△1 FA-201	1ST FLOOR INTERIM PARTIAL RISER DIAGRAM
△1 FA-202	1ST FLOOR INTERIM PARTIAL RISER DIAGRAM CONTINUED
△1 FA-203	1ST FLOOR BUILDOUT PARTIAL RISER DIAGRAM
△1 FA-204	1ST FLOOR BUILDOUT PARTIAL RISER DIAGRAM CONTNUED
Calculations (FA-600 Series)	
FA-601	NODE-1 FIRE ALARM CONTROL PANEL INTERIM CALCS & SCHEDULES
FA-602	NODE-1 TRANSPONDER-4 INTERIM CALCS & SCHEDULES
FA-603	NODE-1 FIRE ALARM CONTROL PANEL BUILDOUT CALCS & SCHEDULES
△1 FA-604	NODE-1 TRANSPONDER-4 BUILDOUT CALCS & SCHEDULES
△1 FA-605	NODE-1 TRANSPONDER-4 BUILDOUT CALCS & SCHEDULES CONTINUED
Typical Details (FA-700 Series)	
FA-701	TYPICAL DEVICE WIRING
Graphic Panels (FA-800 Series)	
△1 FA-801	STATIC GRAPHIC MAP AT FIRE COMMAND CENTER 1C-1013A

Provide a full size set of legible approved construction documents **PRINTED IN COLOR** for review by the Field Inspector.

Field Inspection consultation is available upon request; call (303) 739-7420 to schedule a consultation.

Code violations that are found during inspection are required to be corrected. Permit issuance does not grant approval of a code violation.

City of Aurora Building Division
Reviewed for Code Compliance
Approved as Noted: W. Polk
Date: Sep 07, 2022
2015 INTERNATIONAL CODES & 2020 NEC

COA Adopted Codes for this project:
ICC-2015 - NEC-2020
NFPA 13-2013 - NFPA 72-2013
COA Amendments 22 & 66

City of Aurora Building Division
Project: TMCA CT1 AND RAD ROOM 5 | FIRE A
Address: 1501 S POTOMAC ST UNIT 1
Occupancy Group: IBC I-2
Construction Type: IBC IA-SPK
RSN: 1654836
Permit: 2022-2207219-LT

FIRE DEPT./BLDG DEPT. PLAN REVIEW #:

AURORA BUILDING CODES DIVISION
15151 EAST ALAMEDA PARKWAY, 2ND FLOOR PERMIT CENTER
AURORA, COLORADO 80012
(303) 739-7420

FILE PATH: c:\Users\jrauchc\johnson controls\project electronics - medical center of aurora\1501 s potomac - aurora south\south tower - node 1\32-ct1 & radrm5 - 2022 - 650184053\Fire\FA-001.dwg

LAST SAVED BY: JRAUCHC

LAST PRINTED: 9/7/2022 12:47:23 PM

30" x 42" - Arch E1 Size

GENERAL NOTES

1. THESE DRAWINGS DEPICT GENERAL LOCATIONS OF LIFE SAFETY EQUIPMENT & FIELD DEVICES. EXACT ROUTING OF CONDUITS IS TO BE DETERMINED IN THE FIELD BY THE INSTALLING CONTRACTOR TO SUIT CONDITIONS. ALL CHANGES SHALL BE CLEARLY INDICATED ON THE RECORD DRAWINGS.
2. SHOULD ANY CONDITIONS EXIST THAT DIFFER FROM WHAT IS INDICATED ON THESE DRAWINGS WHICH CAUSE MAJOR DEVIATIONS IN THE WORK SHOWN, THE CONTRACTOR SHALL CONTACT JOHNSON CONTROLS IN A TIMELY MANNER SO AS NOT TO IMPAIR THE CONSTRUCTION SCHEDULE.
3. CONTRACTOR IS RESPONSIBLE FOR MAKING AND OBTAINING APPROVAL FOR ALL NECESSARY ADJUSTMENTS IN CIRCUITING AS REQUIRED TO ACCOMMODATE THE RELOCATION OF EQUIPMENT AND/OR DEVICES WHICH ARE AFFECTED BY ANY AUTHORIZED CHANGE. ALL CHANGES SHALL BE CLEARLY INDICATED ON THE RECORD DRAWINGS.
4. A STAMPED SET OF APPROVED FIRE ALARM DRAWINGS SHALL BE AT THE JOB SITE AND SHALL BE USED FOR INSTALLATION.
5. THE POWER CIRCUIT TO THE FACP AND TO THE FIRE ALARM POWER SUPPLIES SHALL BE ON A DEDICATED 120V, 20A BRANCH CIRCUIT BREAKER, AND SHALL HAVE A RED MARKING, LOCK-ON PROVISION AND SHALL BE IDENTIFIED AS "FIRE ALARM CIRCUIT CONTROL." THE LOCATION OF THE CIRCUIT DISCONNECT MEANS (CIRCUIT BREAKER) SHALL BE PERMANENTLY IDENTIFIED AT THE FIRE ALARM CONTROL UNIT.
6. UPDATE THE AS-BUILT DRAWING SET DAILY WITH JOB PROGRESS. RETURN THE AS-BUILT DRAWING SET TO JOHNSON CONTROLS NO LATER THAN 7 DAYS AFTER FINAL TEST.
7. THE CONTRACTOR WILL MAINTAIN ALL AREAS OF THE BUILDING IN A NEAT AND WORKMANLIKE MANNER.
8. DO NOT APPLY POWER EXCEPT IN THE PRESENCE OF A FACTORY TRAINED JOHNSON CONTROLS TECHNICAL REPRESENTATIVE.
9. ANY SMOKE DETECTOR HEAD INSTALLED BEFORE THE BUILDING IS CLEANED AND ACCEPTED SHALL BE COVERED TO PROTECT FROM DUST. ANY FALSE ALARMS DUE TO DIRT CONTAMINATED HEADS SHALL BE THE RESPONSIBILITY OF THE FIRE ALARM INSTALLER.
10. THE FIRE ALARM INSTALLER WILL MAINTAIN THE FIRE RESISTANCE INTEGRITY OF ALL WALL, CEILING, AND ROOF ASSEMBLIES ANY TIME THAT WORK IS NOT ACTIVELY BEING PERFORMED.
11. INSTALLATION OF DEVICES SHALL BE IN ACCORDANCE WITH MANUFACTURER'S INSTRUCTIONS. POWER LIMITED AND NON-POWER LIMITED FIELD WIRING MUST BE INSTALLED WITHIN THE FACP ENCLOSURE IN ACCORDANCE WITH MANUFACTURER'S INSTRUCTIONS AND APPLICABLE ELECTRICAL CODES. REFER TO 'APPLICABLE CODES & STANDARDS' FOR SPECIFIC CODE REFERENCES.
12. ALL WIRING SHALL BE INSTALLED ACCORDING TO APPLICABLE ELECTRICAL CODES.
13. FIRE ALARM CIRCUITS SHALL BE IDENTIFIED IN ACCORDANCE WITH APPLICABLE ELECTRICAL CODES. MARK ALL FIRE ALARM WIRES IN ACCORDANCE WITH APPLICABLE ELECTRICAL CODE SECTIONS FOR POWER LIMITED AND NON-POWER LIMITED WIRE.
14. FIRE ALARM CABLE INSTALLED IN DUCTS, PLENUM, AND OTHER SPACES USED FOR ENVIRONMENTAL AIR SHALL BE TYPE FPLP.
15. FIRE ALARM CABLE INSTALLED IN THE VERTICAL RUNS AND PENETRATING MORE THAN ONE FLOOR OR CABLES INSTALLED IN VERTICAL RUNS IN SHAFTS SHALL BE TYPE FPLR.
16. FIRE ALARM CABLE INSTALLED IN UNDERGROUND CONDUIT OR OTHER WET LOCATIONS SHALL BE UL LISTED FOR WET LOCATIONS.
17. FIRE ALARM CIRCUITS EXTENDING BEYOND ONE BUILDING AND RUN OUTDOORS SHALL BE INSTALLED IN ACCORDANCE APPLICABLE ELECTRICAL CODES, WHERE APPLICABLE.
18. ALL WIRING, INCLUDING SHIELDS MUST BE DRY AND FREE OF SHORTS AND GROUNDS.
19. ALL SHIELDED WIRE MUST HAVE SHIELD CONTINUITY AT FULL LENGTH OF THE WIRE.
20. ONLY SYSTEM WIRING CAN BE RUN IN THE SAME CONDUIT.
21. 120VAC IS NOT PERMITTED IN THE SAME CONDUIT WITH LOW VOLTAGE WIRING.
22. MAINTAIN MAXIMUM CONDUIT FILL RATIO AS PER APPLICABLE ELECTRICAL CODES REQUIREMENTS.
23. EXISTING CONDUITS MAY BE USED BY THE INSTALLATION CONTRACTOR AS DEEMED NECESSARY; HOWEVER, ANY EXISTING CONDUIT WILL BE USED ONLY IF CONDUITS MEET CURRENT STANDARDS AND CODES. JOHNSON CONTROLS MAKES NO STATEMENTS WRITTEN OR VERBAL AS TO THE CONDITION OF EXISTING CONDUITS.

IMPORTANT NOTICE TO USER: This information may not be sold or transferred to any third party, used on other projects or additions to the project for which it was prepared, or used for completion of this project by any third party. Johnson Controls disclaims all liability for the use or reuse of altered files by the user or any third party and such use will be a user's sole risk. User shall, to the fullest extent permitted by law, defend, indemnify, and hold Johnson Controls harmless from any and all claims for loss, damage or injury arising directly or indirectly from any such unauthorized use.

LEGENDS

FIRE ALARM SYMBOL LEGEND

QTY	SYMBOL	DESCRIPTION	BRAND	MODEL	BACKBOX	WIRE TYPE
		INITIATING DEVICES				
△1 5N	(S)	ADDRESSABLE PHOTOELECTRIC SMOKE SENSOR W/ STANDARD BASE	SIMPLEX	4098-9714 HEAD 4098-9792 BASE	4" OCT, 1-1/2" D	Mi
	(2) OR (S)	EXISTING ADDRESSABLE PHOTOELECTRIC SMOKE SENSOR W/ EXISTING STANDARD BASE	SIMPLEX	4098-9714 HEAD 4098-9792 BASE	4" OCT, 1-1/2" D	Mm Mi
5N		ADDRESSABLE STANDARD HEAT SENSOR W/ STANDARD BASE	SIMPLEX	4098-9733 HEAD 4098-9792 BASE	4" OCT, 1-1/2" D	Mm Mi
		NOTIFICATION APPLIANCES				
2N	#	ADDRESSABLE MULTI-TONE HORN/STROBE ,WALL MOUNT, RED, FIRE	SIMPLEX	49MTV-WRF	SINGLE GANG 1-1/2" D	A
5N	#	ADDRESSABLE STROBE ,WALL MOUNT, RED, CLEAR LENS, FIRE	SIMPLEX	49VO-WRF	SINGLE GANG 1-1/2" D	A
2N	#	ADDRESSABLE MULTI-CANDELA STROBE ,CEILING MOUNT, APPLIANCE ONLY, CLEAR LENS	SIMPLEX	49VO-APPLC	4" SQ. 1-1/2" D	A
		CEILING MOUNT ADAPTER PLATE	SIMPLEX	49VO-APCS		
		APPLIANCE COVER, RED, FIRE LETTERING	SIMPLEX	49VOC-CRF		
		EXISTING CONVENTIONAL CHIME/STROBE - RED - WALL MOUNT	SIMPLEX	4903-9292		H V
		EXISTING CONVENTIONAL STROBE - RED - WALL MOUNT	SIMPLEX	4904-9137		V

GENERAL NOTES:

1. THE INFORMATION OR SYMBOLS SHOWN IN BOLD LINETYPE ARE NEW OR RELOCATED.
2. THE INFORMATION OR SYMBOLS SHOWN IN LIGHT LINETYPE ARE EXISTING TO REMAIN.

FIRE ALARM WIRE LEGEND

	CIRCUIT DESCRIPTION	CONSTRUCTION	GAUGE	CIRCUIT PROPERTIES	FPLR	FPLP	THHN	TFFN	OUTDOOR **	C.I.
A	ADDRESSABLE NOTIFICATION	UTP SOLID	14 AWG	60pf/ft. MAX CAPACITANCE; 3 twists/ft. MINIMUM	X	X				
H	AUDIBLE CIRCUIT	2 COND. SOLID	14 AWG		X	X				
Mm	MAPNET	STP SOLID	16 AWG	60µF MAX TOTAL LINE CAPACITANCE	X	X				
Mi	IDNET	UTP SOLID	18 AWG	60µF MAX TOTAL LINE CAPACITANCE	X	X				
V	VISUAL	2 COND. SOLID	14 AWG		X	X				

(FPLR through C.I.: ACCEPTABLE CABLE TYPES)

CONDUIT SIZE	MAX CONDUCTOR AREA	CONDUIT SIZE	MAX CONDUCTOR AREA
1/2"	0.122 SQ. INCH*	1-1/4"	0.598 SQ INCH*
3/4"	0.213 SQ INCH*	1-1/2"	0.814 SQ INCH*
1"	0.346 SQ INCH*	2"	1.342 SQ INCH*
* 40% CONDUIT FILL PER N.E.C.		STP = SHIELDED TWISTED PAIR	

ITEMS SUCH AS CAPACITANCE BETWEEN CONDUCTORS AND WIRE GAUGE CAN BE CRUCIAL TO THE CIRCUIT DESIGN OF THIS SYSTEM INSTALLATION. THE INSTALLING CONTRACTOR IS RESPONSIBLE FOR SELECTING AND INSTALLING CABLE MANUFACTURER AND MODEL THAT MEETS OR EXCEEDS THE ABOVE REQUIREMENTS. RECOMMENDED CABLE MANUFACTURERS AND MODEL NUMBERS ARE AVAILABLE UPON REQUEST.

△2 AURORA BUILDING FIRE DEPARTMENT GENERAL NOTES

- FIRE ALARM SYSTEMS CANNOT BE COMBINED WITH BURGLAR ALARM SYSTEMS.
- THE INSTALLER IS REQUIRED TO COORDINATE WITH THE MECHANICAL CONTRACTOR TO DETERMINE INSTALLATION OF SMOKE DETECTORS OR SENSORS (i.e., NOT CLOSER THAN 3 FEET FROM ANY SUPPLY/RETURN DIFFUSER AND THAT ADDITIONAL DETECTION MAY BE REQUIRED DUE TO THE RELOCATION OR SPACING ADJUSTMENT OF DETECTORS, AS A RESULT).
- FIRE ALARM DEVICES MUST BE PLACED IN PROTECTED AREAS WITH AMBIENT TEMPERATURE RANGING FROM 32 DEGREES TO 120 DEGREES F.
- DO NOT PLACE SMOKE DETECTORS WITHIN 3 FEET OF AIR SUPPLY REGISTERS AND DIFFUSERS.
- FIRE ALARM SYSTEM SHALL BE MONITORED BY A CLASS 1 CENTRAL STATION.
- FIRE ALARM CONTROL PANEL WILL BE PLACED IN THE LOCATION SPECIFIED WITHIN THE PLAN SUBMITTAL UNLESS APPROVED BY THE LIFE SAFETY FIELD INSPECTOR.
- CITY OF AURORA BUILDING CODES DIVISION DOES NOT GRANT APPROVAL FOR ANY VIOLATIONS OF ADOPTED FIRE CODE. CODE VIOLATIONS UNCOVERED DURING FIELD INSPECTIONS MUST BE CORRECTED.
- PER THE 2015 IFC AND THE 2020 NEC THE INSTALLER MUST REQUEST A ROUGH WIRING INSPECTION IN THE FIRE ALARM SYSTEM PRIOR TO REQUESTING A FIRE ALARM FINAL INSPECTION.
- THE CONTRACTOR SHALL CONDUCT A "PRE-TEST" OF THE PROJECT AREA PRIOR TO SCHEDULING AN ACCEPTANCE TEST WITH THE BUILDING CODES DIVISION.
- REMOTE ALARM INDICATORS SHALL BE PROVIDED FOR ANY AUTOMATIC FIRE ALARM DETECTOR LOCATED IN A CONCEALED LOCATION WITH A NORMALLY LOCKED DOOR.
- AT THE TIME OF FINAL FIRE ALARM INSPECTION, THE SYSTEM MUST BE SUPERVISED/MONITORED BY A CLASS 1 CENTRAL MONITORING AGENCY.
- THE INSTALLING CONTRACTOR (OR DESIGNEE) MUST PROVIDE ALL NECESSARY TESTING EQUIPMENT AND PERFORM ALL TESTING REQUIRED BY THE LIFE SAFETY FIELD INSPECTOR.
- IN-DUCT SMOKE DETECTORS INSTALLED IN CONCEALED LOCATIONS OR, WHERE THE DETECTOR'S ALARM INDICATOR IS NOT READILY VISIBLE TO RESPONDING PERSONNEL SHALL BE PROVIDED WITH A REMOTE INDICATOR(S), REMOTE TEST STATION AND PLACARDING.
- ALL NEW OR EXISTING FIRE ALARM SYSTEMS MUST BE CONNECTED ANY EXTERIOR HORN AND STROBE APPLIANCE. IF THE BUILDING IS FIRE SPRINKLED, A GENERAL ALARM ACTIVATION AT THE FIRE ALARM CONTROL PANEL WILL ACTIVATE THE EXTERIOR HORN AND STROBE. SILENCING THE PANEL MUST ALLOW THE VISUAL DEVICE TO CONTINUE UNTIL THE PANEL IS RESET.
- FIRE ALARM SYSTEMS SHALL INCLUDE BOTH AUDIBLE AND VISUAL ALARMS. VISUAL ALARMS WILL BE REQUIRED IN ALL ACCESSIBLE PUBLIC AND COMMON-USE AREAS PER THE 2015 IFC AND THE 2009 ANSI A117.1 STANDARD.
- PROVIDE A PRIMARY AND SECONDARY POWER SUPPLY FOR THE FIRE ALARM SYSTEM PER THE 2015 IFC, SECTION 907.5 AND THE 2013 NFPA 72.
- FIELD INSPECTION CONSULTATION IS AVAILABLE UPON REQUEST. CALL 303-739-7420 TO REQUEST CONSULTATION.
- THE FIRE ALARM CONTRACTOR MUST COMPLETE THE NFPA72 "RECORD OF COMPLETION" PRIOR TO SCHEDULING THE AHJ ACCEPTANCE TEST.
- AUDIBLE ALARM SIGNALING DEVICES SHALL EXCEED THE PREVAILING SOUND LEVEL IN A ROOM OR SPACE BY 15 DBA. SOUND LEVELS FOR ALARM SIGNALS SHALL BE 120 DBA MAXIMUM. 2015 IFC SECTION 907.10.2.

APPLICABLE CODES & STANDARDS

JURISDICTIONS WITHIN THE STATE MAY HAVE AMENDMENTS TO THE STATE ADOPTED CODE. CHECK WITH THE LOCAL JURISDICTION AUTHORITY FOR MORE DETAILS.

△2 International Building Code (IBC), 2015 Edition
International Fire Code (IFC), 2015 Edition
National Electric Code (NFPA 70), 2020 Edition
△2 National Fire Alarm and Signaling Code (NFPA 72), 2013 Edition
Life Safety Code (NFPA 101), 2015 Edition
ICC A117.1 Accessible and Usable Buildings and Facilities, 2009 Edition
ADA Standards for Accessible Design, 2010 Edition
Colorado Department of Health and Environment - Hospital Licensing Rules, 2012 Edition

OCCUPANCY TYPE(S):
I-2 INSTITUTIONAL GROUP

SPRINKLER PROTECTION:
BUILDING IS FULLY SPRINKLERED

AREA:
TOTAL: APPROX. 450,396 SQ. FT.
SCOPE: APPROX. 2,127 SQ. FT

STORIES:
TOTAL: 6 STORIES + BASEMENT
SCOPE: PARTIAL 1ST FLOOR

CONSTRUCTION:
TYPE 2-A

JOHNSON CONTROLS CONTACTS

Sales Representative
RYAN SCHISSEL
RYAN.SCHISSEL@JCI.COM
PHONE:720-633-5751

Drawings Prepared By
CALE RAUCH
CALE.RAUCH@JCI.COM
NICET II #151588, EXP. 12/01/2025

Project Manager
KATHERINE LUDEMAN
KATHERINE.LUDEMAN@JCI.COM
PHONE:720-775-0485

Drawings Reviewed By
NANCY WILTSIE
NANCY.WILTSIE@JCI.COM
NICET III #93727, EXP. 03/01/2024

SCOPE OF WORK

MODIFY EXISTING FIRE ALARM SYSTEM: PROVIDE NEW DEVICES, RELOCATE AND DEMO EXISTING DEVICES AS SHOWN ON DRAWINGS.

AREA TO RECEIVE WORK INCLUDES APPROXIMATELY 2,127 SQUARE FEET ENCOMPASSING EXISTING CAT, NUCLEAR MED, AND RADIOLOGY AREAS ON THE FIRST LEVEL OF THE MEDICAL CENTER OF AURORA - SOUTH AT 1501 SOUTH POTOMAC STREET, AURORA, COLORADO 80012.

FOR INTERIM - EXISTING AREAS TO RECEIVE PARTIAL DEMOLITION TO ALLOW FOR UPDATES TO THE ROOMS. DURING DEMOLITION, INTERIM HEAT-DETECTORS TO BE INSTALLED IN SCOPE AREAS FOR CONSTRUCTION. RE-USE EXISTING STANDARD INITIATION-BASES WHERE AVAILABLE, INSTALL NEW BASES WHERE NECESSARY. SELECT EXISTING NOTIFICATION TO BE KEPT IN AREA AS INTERIM FOR CONSTRUCTION.

FOR BUILDOUT - REMOVE INTERIM DEVICES, EXCLUDING NOTED INITIATION-BASES TO BE REUSED FOR BUILDOUT. INSTALL NEW OR EXISTING INITIATION AS NOTED ON DRAWINGS. NEW ADDRESSABLE NOTIFICATION TO BE INSTALLED. NEW INITIATION TO TIE TO M11 CIRCUIT OF EXISTING TRANSPONDER-4 LOCATED IN ELECTRICAL 1-CS16. NEW NOTIFICATION TO TIE TO EXISTING NODE-1 A2:1(E2:1) IDNAC CIRCUIT OF THE EPR LOCATED IN BREAK ROOM 7300 CONNECTED TO EXISTING TRANSPONDER-4. EXISTING STATIC GRAPHIC MAP AT FIRE COMMAND CENTER 1C-1013A ON THE FIRST LEVEL TO RECEIVE ARCHITECTURAL AND INITIATION UPDATES.

NOTE THAT THE INITIATION DEVICES IN THESE SCOPE AREAS WERE ON MAPNET PROGRAMMING AND ARE BEING MOVED TO IDNET. THE NOTIFICATION DEVICES WERE CONVENTIONALLY RAN AND ARE BEING MOVED TO ADDRESSABLE.

ALL NEW WIRING TO BE CLASS B. NEW DEVICES TO FOLLOW EXISTING SEQUENCE OF OPERATIONS; NO FURTHER CHANGES TO OCCUR.

AUTOMATIC FIRE ALARM SYSTEM SHALL TRANSMIT THE ALARM, SUPERVISORY AND TROUBLE SIGNALS TO AN APPROVED SUPERVISING STATION. THE SUPERVISING STATION SHALL BE LISTED AS EITHER UUFX OR UUJS UNDERWRITERS LABORATORY OR SHALL MEET THE REQUIREMENTS OF FACTORY MUTUAL RESEARCH APPROVAL STANDARD 3011. SUPERVISION OF SYSTEM AND LEASED TELEPHONE LINES SHALL BE ARRANGED BY THE OWNER

THE EXISTING FIRE ALARM SYSTEM SHALL NOT BE DISCONNECTED OR TAKEN OUT OF SERVICE WITHOUT WRITTEN PERMISSION FROM THE OWNER. IT IS THE CONTRACTOR'S RESPONSIBILITY TO COORDINATE WITH THE OWNER THE TIMING OF ANY EXISTING FIRE ALARM SYSTEM DEMOLITION WORK.

PROJECT DIRECTORY

Site
THE MEDICAL CENTER OF AURORA
1501 SOUTH POTOMAC STREET
AURORA, COLORADO 80012
PHONE: 303-695-2600

Johnson Controls District - 419
14200 E. EXPOSITION AVE
AURORA, CO 80012
PHONE: 303-355-0500
FAX: 303-355-0615
SERVICE: 303-355-0500

Owner
HEALTH ONE
4900 SOUTH MONACO STREET
DENVER, COLORADO 80237
PHONE: 303-946-5511

Installer
ODIN ELECTRIC
2120 SOUTH ASH STREET, UNIT 200
DENVER, COLORADO 80222
PHONE: 720-791-6346

DESIGN STATEMENT

THIS PROJECT'S DESIGN IS BASED ON THE ENGINEERED PLANS AND SPECIFICATIONS PREPARED BY:
PATH 21 ARCHITECTURE + PLANNING

ARCHITECTURAL PLANS DATED:	JANUARY 17, 2022
MECHANICAL PLANS DATED:	JANUARY 17, 2022
ELECTRICAL PLANS DATED:	JANUARY 17, 2022
SPECIFICATIONS DATED:	JANUARY 17, 2022
ADDENDUM DATED:	

ABBREVIATIONS LEGEND

AC = ABOVE CEILING
AFF = ABOVE FINISHED FLOOR
AHJ = AUTHORITY HAVING JURISDICTION
ALM = ALARM
ANN = ANNUNCIATOR
BMS = BUILDING MANAGEMENT SYSTEM
C = CEILING MOUNTED
CD = CANDELA RATING
DET = DETECTOR
DGP = DATA GATHERING PANEL
E = EXISTING TO REMAIN
EOL = END OF LINE
EPO = EMERGENCY POWER OFF
ER = ELEVATOR RECALL
FAA = FIRE ALARM ANNUNCIATOR
FACP = FIRE ALARM CONTROL PANEL
FATC = FIRE ALARM TERMINAL CABINET
FBO = FURNISHED BY OTHERS
FCC = FIRE COMMAND CENTER
FSD = FIRE SMOKE DAMPER
FTR = FIRE ALARM TRANSPONDER
H = HIGH HUMIDITY
HT = HEIGHT
HVAC = HEATING VENTILATION & AIR CONDITIONING
IMS = INFORMATION MANAGEMENT SYSTEM
MAX = MAXIMUM
MIN = MINIMUM
N = NEW DEVICE
NAC = NOTIFICATION APPLIANCE CIRCUIT
NDU = NETWORK DISPLAY UNIT
NEC = NATIONAL ELECTRIC CODE
NFPA = NATIONAL FIRE PROTECTION ASSOCIATION
NIC = NOT IN CONTRACT
NPU = NETWORK PROCESSING UNIT
NTS = NOT TO SCALE
PAP = PRE-ACTION PANEL
RC = EXISTING TO REMOVE AND COVER
RD = EXISTING DEVICE TO BE RELOCATED
RL = RELOCATED DEVICE
RR = REMOVE EXISTING & REPLACE WITH NEW
SCC = STATUS COMMAND CENTER
SLC = SIGNALING LINE CIRCUIT
SMK = SMOKE
SUPV = SUPERVISORY
TAC = TRUEALERT ADDRESSABLE CONTROLLER
TOS = TOP OF SHAFT
TRBL = TROUBLE
TS = TAMPER SWITCH
TYP = TYPICAL
UON = UNLESS OTHERWISE NOTED
VCC = VOICE COMMAND CENTER
VT = VALVE TAMPER
W = WATTAGE
W/ = WITH
W/O = WITHOUT
WF = WATERFLOW
WG = WIRE GUARD
WP = WEATHERPROOF
XP = EXPLOSION PROOF

DEVICE TAG LEGEND

1:T2:A2-1(E1:1)

PANEL DESIGNATOR
- FA: = FACP (NON-NETWORK)
- #: = NODE NUMBER
- T#: = TRANSPONDER NUMBER
- #:T# = NODE:TRANSPONDER NUMBER
- N#: = NAC EXTENDER NUMBER

CIRCUIT DESIGNATOR
- A# = IDNAC[1] CIRCUIT NUMBER
- D# = DOOR HOLDER CIRCUIT NUMBER
- F# = FIRE PHONE CIRCUIT
- H# = AUDIBLE (HORN) CIRCUIT NUMBER
- M# = IDNET LOOP NUMBER
- P# = POWER CIRCUIT NUMBER
- S# = SPEAKER CIRCUIT NUMBER
- V# = VISUAL CIRCUIT NUMBER
- Z# = ZONE NUMBER

DEVICE NUMBER

BRANCH / ISOLATED LOOP DESIGNATOR:
- (L#) = IDNET ISOLATED LOOP NUMBER
- (#) = IDNAC BRANCH NUMBER
- (E#:#) = EPR[2] NUMBER:BRANCH NUMBER

1. IDNAC = ADDRESSABLE NOTIFICATION CIRCUIT
2. EPR = ENHANCED POWER REPEATER

SYSTEM SEQUENCE OF OPERATIONS

M.C.O.A. SOUTH TOWER — SEQUENCE OF OPERATIONS

SYSTEM OUTPUTS: FACP Annunciation (A–F); Notification (G–M); Required Controls (N–V); Supplementary (W–Z)

	SYSTEM INPUTS	A ACTUATE COMMON ALARM SIGNAL INDICATOR	B ACTUATE AUDIBLE ALARM SIGNAL	C ACTUATE COMMON SUPERVISORY SIGNAL INDICATOR	D ACTUATE AUDIBLE SUPERVISORY SIGNAL	E ACTUATE COMMON TROUBLE SIGNAL INDICATOR	F ACTUATE AUDIBLE COMMON TROUBLE SIGNAL	G ACTUATE EVACUATION SIGNALS (SPEAKERS/STROBES)	H ACTUATE SPRINKLER BELL	I DISPLAY CHANGE OF STATUS AT REMOTE ANNUNCIATOR	J TRANSMIT FIRE ALARM SIGNAL TO OFF-SITE REPORTING	K TRANSMIT SUPERVISORY SIGNAL TO OFF-SITE REPORTING	L TRANSMIT TROUBLE SIGNAL TO OFF-SITE REPORTING	M NOTIFY HOSPITAL PBX	N FAN SHUT DOWN	O DAMPER SHUT DOWN	P RELEASE CORRIDOR FIRE DOORS	Q RELEASE ELEVATOR FIRE DOORS	R RELEASE ASSOCIATED ROLL-UP DOOR	S ELEVATOR SHUT DOWN (*)	T ELEVATOR RECALL - MAIN FLOOR	U ELEVATOR RECALL - ALTERNATE FLOOR	V ELEVATOR HAT FLASH	W OVERRIDE MUSIC SYSTEM	X SILENCE AUDIBLE SIGNAL (EXCLUDING EXTERIOR H/S)	Y ACTUATE OUTSIDE HORN/STROBE	Z RESET PANEL TO "NORMAL" CONDITION	
1	SMOKE DETECTOR	X	X					X		X	X				X	X	X							X		X		1
2	SMOKE DETECTOR AT 2ND, 4TH & 5TH FLR CLERK DESK	X	X					X		X	X						X		X					X		X		2
3	SMOKE DETECTOR AT SMOKE PARTITION	X	X					X		X	X						X							X		X		3
4	MANUAL PULL STATION	X	X					X		X	X						X							X		X		4
5	HEAT DETECTOR	X	X					X		X	X						X							X		X		5
6	DUCT DETECTOR			X	X			X		X		X			X	X												6
7	DUCT DETECTOR AT F/S DAMPER			X	X			X		X		X				X	X											7
8	MAIN FLR. ELEV. LOBBY SMOKE DETECTOR	X	X					X		X	X				X	X	X		X			X		X		X		8
9	ELEV. LOBBY SMOKE DETECTORS (EXCL. MAIN FLR.)	X	X					X		X	X										X			X		X		9
10	ELEV. MECH. ROOM SMOKE DETECTOR	X	X					X		X	X													X		X		10
11	ELEV. SHAFT HEAT DETECTOR	X	X					X		X	X									X	X			X		X		11
12	ELEV. MECH. ROOM HEAT DETECTOR	X	X					X		X	X									X	X			X		X		12
13	WATERFLOW SWITCH	X	X					X	X	X	X													X		X		13
14	TAMPER SWITCH			X	X					X		X																14
15	POST INDICATOR VALVE SWITCH			X	X					X		X																15
16	FACP AC POWER FAILURE					X	X						X															16
17	FACP LOW BATTERY					X	X						X															17
18	OPEN CIRCUIT					X	X						X															18
19	GROUND FAULT					X	X						X															19
20	NOTIFICATION APPLIANCE CIRCUIT SHORT					X	X						X															20
21	ALARM SIGNAL SILENCE																								X			21
22	SYSTEM RESET																										X	22
23	CATH LAB BUILDING ALARM	X	X							X				X														23

NOTE: Audible Evacuation Signal shall be Temporal Pattern per NFPA 72.
** Disconnect power after a time delay equal to the time it takes for the car to travel from the highest to the lowest level plus 10 seconds.*
New devices will be added to the exsiting sequence of operations. No further changes will occur.

Johnson Controls
DISTRICT - 419
14200 E. EXPOSITION AVE
AURORA, CO 80012
SERVICE: 303-355-0500
PHONE: 303-355-0500
FAX: 303-355-0615

NICET CERTIFICATION INFORMATION
NANCY S. WILTSIE
NICET Fire Alarm, III
Certification #93727
Valid Through: 03/01/24
September 7, 2022

THE MEDICAL CENTER OF AURORA - SOUTH CAMPUS
CT 1 AND RAD ROOM 5
THE MEDICAL CENTER OF AURORA
1501 SOUTH POTOMAC STREET
AURORA, COLORADO 80012

ISSUE LOG: Revisions shown with △# symbol

MARK	DATE	CAD	CHK	DESCRIPTION
1	08/29/2022	CBR	NSW	CHANGES PER CUSTOMER REQUEST DATED 08/25/2022.
2	09/07/2022	CBR	NSW	CHANGES PER FIRE DEPARTMENT REVIEW DATED 09/03/2022.

FOR PERMIT

DRAWN BY:	CBR
CHECKED BY:	NSW
ISSUE DATE:	7/5/22
JOB #:	
PROJECT #:	419:650184053

JOHNSON CONTROLS © 2022

SYSTEM: FIRE ALARM SYSTEM

SHEET: COVER SHEET

FA-001

© Johnson Controls 2022. All rights reserved. Reuse, copying, modification or alteration of the drawings and other information contained herein is strictly prohibited.

GENERAL NOTES:

1. ALL CEILINGS ARE ASSUMED TO BE 10' A.F.F., SMOOTH CONSTRUCTION UNLESS NOTED OTHERWISE.
2. ALL NOTIFICATION APPLIANCE CANDELA INTENSITY PLUGS SHALL RETAIN THEIR FACTORY SETTING OF "FACP" UNLESS OTHERWISE DIRECTED BY THE AUTHORITY HAVING JURISDICTION.
3. DO NOT CHANGE DEFAULT APPLIANCE CONFIGURATION SWITCH SETTINGS ON ADDRESSABLE A/V DEVICES (CFIG1). REFER TO DEVICE DETAILS AND INSTALLATION INSTRUCTIONS FOR MORE INFORMATION.
4. THE DEVICE ADDRESSES INDICATED ON THESE DRAWINGS ARE AN ALPHANUMERIC DESCRIPTION OF WHICH CIRCUIT THE DEVICE IS LOCATED ON. DEVICES MAY BE ASSIGNED A DIFFERENT NUMBER WITHIN THE PANEL PROGRAM. CONSULT WITH A JOHNSON CONTROLS TECHNICIAN BEFORE APPLYING A PHYSICAL LABEL TO ANY DEVICES.
5. THE INFORMATION OR SYMBOLS SHOWN IN BOLD LINETYPE ARE NEW OR RELOCATED.
6. THE INFORMATION OR SYMBOLS SHOWN IN LIGHT LINETYPE ARE EXISTING TO REMAIN.
7. ALL ITEMS THAT ARE HATCHED ARE NOT IN THIS SCOPE OF WORK.

KEYNOTES:

1. NEW HEAT SENSOR TO REPLACE EXISTING SMOKE SENSOR HEAD ONLY AS INTERIM FOR CONSTRUCTION. REUSE EXISTING BASE, EXISTING ADDRESS, AND EXISTING WIRING.
2. NEW HEAT SENSOR TO BE INSTALLED AS INTERIM FOR CONSTRUCTION. TO BE REMOVED AFTER CONSTRUCTION.
3. EXISTING CHIME/STROBE TO REMAIN AS INTERIM NOTIFICATION FOR CONSTRUCTION. TO BE REMOVED DURING BUILDOUT.
4. MAINTAIN CIRCUIT INTEGRITY/CONTINUITY FOR OTHER DEVICES ON THE CIRCUIT.
5. EXISTING SMOKE SENSOR TO BE PLACED BACK INTO EXISTING BASE FOR BUILDOUT.
6. REUSE EXISTING STANDARD BASE IN THIS LOCATION FROM INTERIM. NEW SMOKE HEAD USED. RETURN HEAT SENSOR HEAD TO CUSTOMER STOCK.
7. CUSTOMER REQUESTED DEVICE. THIS DEVICE IS ABOVE NECESSARY CODE AND STANDARD.
8. INTERIM HEAT DETECTION AND BASE REMOVED FROM THIS LOCATION FOR BUILDOUT. RETURN HEAD AND BASE TO CUSTOMER FOR STOCK.

FIRE ALARM SYMBOL LEGEND

QTY	SYMBOL	DESCRIPTION	BRAND	MODEL	BACKBOX	WIRE TYPE
		INITIATING DEVICES				
5N	(5)	ADDRESSABLE PHOTOELECTRIC SMOKE SENSOR W/ STANDARD BASE	SIMPLEX	4098-9714 HEAD 4098-9792 BASE	4" OCT, 1-1/2" D	Mi
	(2) OR (5)	EXISTING ADDRESSABLE PHOTOELECTRIC SMOKE SENSOR W/ EXISTING STANDARD BASE	SIMPLEX	4098-9714 HEAD 4098-9792 BASE	4" OCT, 1-1/2" D	Mm Mi
5N	(4)	ADDRESSABLE STANDARD HEAT SENSOR W/ STANDARD BASE	SIMPLEX	4098-9733 HEAD 4098-9792 BASE	4" OCT, 1-1/2" D	Mm Mi
		NOTIFICATION APPLIANCES				
2N	#	ADDRESSABLE MULTI-TONE HORN/STROBE ,WALL MOUNT, RED, FIRE	SIMPLEX	49MTV-WRF	SINGLE GANG 1-1/2" D	A
5N	#	ADDRESSABLE STROBE ,WALL MOUNT, RED, CLEAR LENS, FIRE	SIMPLEX	49VO-WRF	SINGLE GANG 1-1/2" D	A
2N	#	ADDRESSABLE MULTI-CANDELA STROBE ,CEILING MOUNT, APPLIANCE ONLY, CLEAR LENS	SIMPLEX	49VO-APPLC	4" SQ. 1-1/2" D	A
		CEILING MOUNT ADAPTER PLATE	SIMPLEX	49VO-APCS		
		APPLIANCE COVER, RED, FIRE LETTERING	SIMPLEX	49VOC-CRF		
		EXISTING CONVENTIONAL CHIME/STROBE - RED - WALL MOUNT	SIMPLEX	4903-9292		H V
		EXISTING CONVENTIONAL STROBE - RED - WALL MOUNT	SIMPLEX	4904-9137		V

FIRE ALARM WIRE LEGEND

	CIRCUIT DESCRIPTION	CONSTRUCTION	GAUGE	CIRCUIT PROPERTIES	ACCEPTABLE CABLE TYPES: FPLR	FPLP	THHN	TFFN	OUTDOOR *	C.L.
A	ADDRESSABLE NOTIFICATION	UTP SOLID	14 AWG	60pf/ft. MAX CAPACITANCE; 3 twists/ft. MINIMUM	X	X				
H	AUDIBLE CIRCUIT	2 COND. SOLID	14 AWG		X	X				
Mm	MAPNET	STP SOLID	16 AWG	60µF MAX TOTAL LINE CAPACITANCE	X	X				
Mi	IDNET	UTP SOLID	18 AWG	60µF MAX TOTAL LINE CAPACITANCE	X	X				
V	VISUAL	2 COND. SOLID	14 AWG		X	X				

CONDUIT SIZE	MAX CONDUCTOR AREA	CONDUIT SIZE	MAX CONDUCTOR AREA
1/2"	0.122 SQ. INCH*	1-1/4"	0.598 SQ INCH*
3/4"	0.213 SQ INCH*	1-1/2"	0.814 SQ INCH*
1"	0.346 SQ INCH*	2"	1.342 SQ INCH*

* 40% CONDUIT FILL PER N.E.C. — STP = SHIELDED TWISTED PAIR

ITEMS SUCH AS CAPACITANCE BETWEEN CONDUCTORS AND WIRE GAUGE CAN BE CRUCIAL TO THE CIRCUIT DESIGN OF THIS SYSTEM INSTALLATION. THE INSTALLING CONTRACTOR IS RESPONSIBLE FOR SELECTING AND INSTALLING CABLE MANUFACTURER AND MODEL THAT MEETS OR EXCEEDS THE ABOVE REQUIREMENTS. RECOMMENDED CABLE MANUFACTURERS AND MODEL NUMBERS ARE AVAILABLE UPON REQUEST.

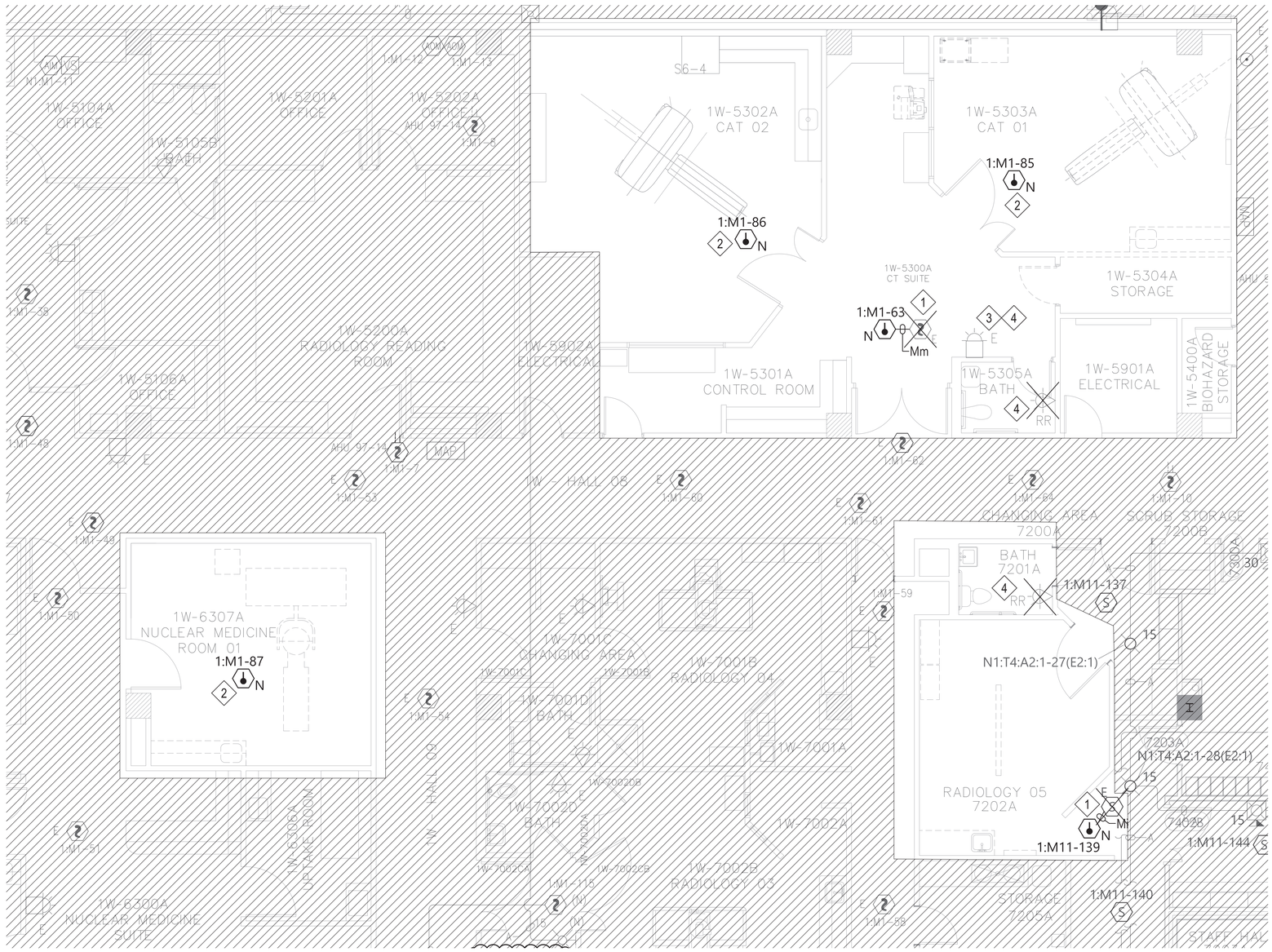

1ST FLOOR INTERIM PARTIAL DEVICE PLACEMENT PLAN
SCALE:1/4" = 1'-0"
SCALE:1/4" = 1'-0" 0 2' 4' 8' IN FEET

City of Aurora Building Division
Reviewed for Code Compliance
Approved as Noted: *W. Polk*
Date: *Sep 07, 2022*
2015 INTERNATIONAL CODES & 2020 NEC

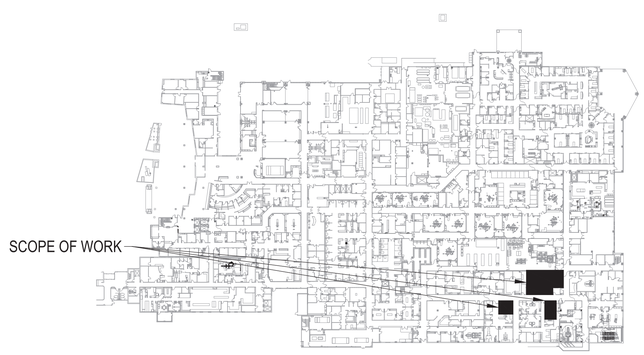

KEYPLAN
SCALE:N.T.S.

Johnson Controls
DISTRICT 1-415
10065 E. EXPOSITION AVE
AURORA, CO 80012
SERVICE: 303-355-6000
PHONE: 303-350-9500
FAX: 303-355-9615

NICET CERTIFICATION INFORMATION
NANCY S. WILTSIE
NICET Fire Alarm, III
Certification #93727
Valid Through: 03/01/24
September 7, 2022

THE MEDICAL CENTER OF AURORA - SOUTH CAMPUS CT 1 AND RAD ROOM 5

THE MEDICAL CENTER OF AURORA
1501 SOUTH POTOMAC STREET
AURORA, COLORADO 80012

Revisions shown with Δ symbol

ISSUE LOG MARK	DATE	CAD	CHK	DESCRIPTION
1	08/17/2022	CBR	NSW	PER CUSTOMER REQUEST DATED 08/05/2022
2	09/07/2022	CBR	NSW	CHANGES PER FIRE DEPARTMENT REVIEW DATED 09/02/2022

FOR PERMIT

DRAWN BY:	CBR
CHECKED BY:	NSW
ISSUE DATE:	7/5/22
JOB #:	
PROJECT #:	419:650184053
JOHNSON CONTROLS © 2022	
SYSTEM:	FIRE ALARM SYSTEM

SHEET:
1ST FLOOR INTERIM PARTIAL DEVICE PLACEMENT PLAN

FA-101

© Johnson Controls 2022. All rights reserved. Reuse, copying, modification or alteration of the drawings and other information contained herein is strictly prohibited.

FILE PATH: c:\Users\jsuchc\johnson controls\project electronics - medical center of aurora\1501 s potomac - aurora south\south tower - node 1\32-ct1 & adm\5 - 2022 - 650184053-FireFA-101.dwg
LAST SAVED BY: JSUCHC
LAST PRINTED: 9/7/2022 12:48:32 PM
30" X 42" - Arch E1 Size

RSN: 1654836
Permit # 2022-2207219 -LT
Sheet 3 of 36

GENERAL NOTES:

1. ALL CEILINGS ARE ASSUMED TO BE 10' A.F.F., SMOOTH CONSTRUCTION UNLESS NOTED OTHERWISE.
2. ALL NOTIFICATION APPLIANCE CANDELA INTENSITY PLUGS SHALL RETAIN THEIR FACTORY SETTING OF "FACP" UNLESS OTHERWISE DIRECTED BY THE AUTHORITY HAVING JURISDICTION.
3. DO NOT CHANGE DEFAULT APPLIANCE CONFIGURATION SWITCH SETTINGS ON ADDRESSABLE A/V DEVICES (CFIG1). REFER TO DEVICE DETAILS AND INSTALLATION INSTRUCTIONS FOR MORE INFORMATION.
4. THE DEVICE ADDRESSES INDICATED ON THESE DRAWINGS ARE AN ALPHANUMERIC DESCRIPTION OF WHICH CIRCUIT THE DEVICE IS LOCATED ON. DEVICES MAY BE ASSIGNED A DIFFERENT NUMBER WITHIN THE PANEL PROGRAM. CONSULT WITH A JOHNSON CONTROLS TECHNICIAN BEFORE APPLYING A PHYSICAL LABEL TO ANY DEVICES.
5. THE INFORMATION OR SYMBOLS SHOWN IN BOLD LINETYPE ARE NEW OR RELOCATED.
6. THE INFORMATION OR SYMBOLS SHOWN IN LIGHT LINETYPE ARE EXISTING TO REMAIN.
7. ALL ITEMS THAT ARE HATCHED ARE NOT IN THIS SCOPE OF WORK.

KEYNOTES:

1. NEW HEAT SENSOR TO REPLACE EXISTING SMOKE SENSOR HEAD ONLY AS INTERIM FOR CONSTRUCTION. REUSE EXISTING BASE, EXISTING ADDRESS, AND EXISTING WIRING.
2. NEW HEAT SENSOR TO BE INSTALLED AS INTERIM FOR CONSTRUCTION. TO BE REMOVED AFTER CONSTRUCTION.
3. EXISTING CHIME/STROBE TO REMAIN AS INTERIM NOTIFICATION FOR CONSTRUCTION. TO BE REMOVED DURING BUILDOUT.
4. MAINTAIN CIRCUIT INTEGRITY/CONTINUITY FOR OTHER DEVICES ON THE CIRCUIT
5. EXISTING SMOKE SENSOR TO BE PLACED BACK INTO EXISTING BASE FOR BUILDOUT.
6. REUSE EXISTING STANDARD BASE IN THIS LOCATION FROM INTERIM. NEW SMOKE HEAD USED. RETURN HEAT SENSOR HEAD TO CUSTOMER STOCK.
7. CUSTOMER REQUESTED DEVICE. THIS DEVICE IS ABOVE NECESSARY CODE AND STANDARD.
8. INTERIM HEAT DETECTION AND BASE REMOVED FROM THIS LOCATION FOR BUILDOUT. RETURN HEAD AND BASE TO CUSTOMER FOR STOCK.

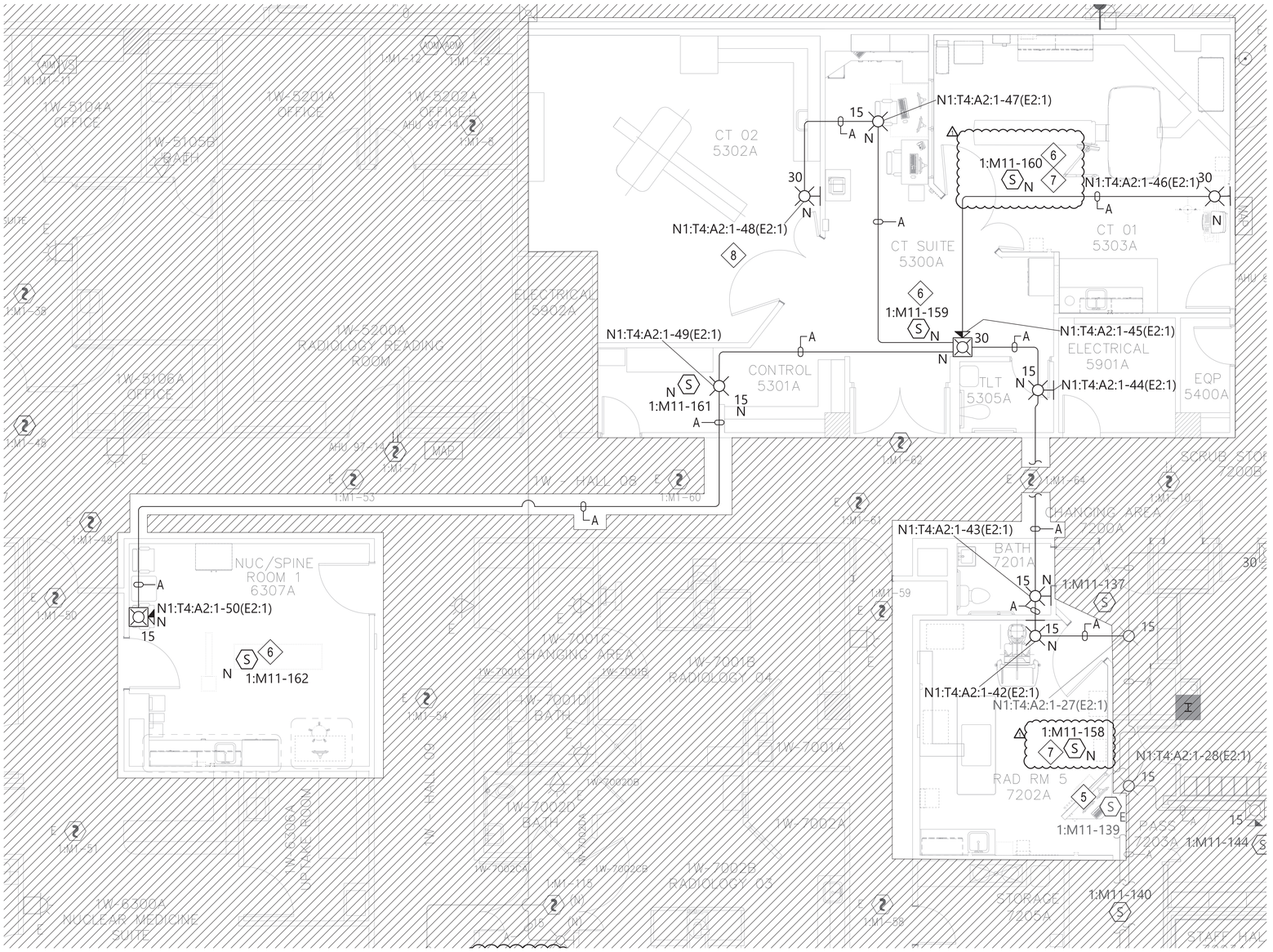

1ST FLOOR BUILDOUT PARTIAL DEVICE PLACEMENT PLAN

SCALE:1/4" = 1'-0"

SCALE:1/4" = 1'-0" IN FEET 0 2 4 8

FIRE ALARM SYMBOL LEGEND

QTY	SYMBOL	DESCRIPTION	BRAND	MODEL	BACKBOX	WIRE TYPE
		INITIATING DEVICES				
5N	(5)	ADDRESSABLE PHOTOELECTRIC SMOKE SENSOR W/ STANDARD BASE	SIMPLEX	4098-9714 HEAD 4098-9792 BASE	4" OCT, 1-1/2" D	Mi
	(2) OR (5)	EXISTING ADDRESSABLE PHOTOELECTRIC SMOKE SENSOR W/ EXISTING STANDARD BASE	SIMPLEX	4098-9714 HEAD 4098-9792 BASE	4" OCT, 1-1/2" D	Mm Mi
5N		ADDRESSABLE STANDARD HEAT SENSOR W/ STANDARD BASE	SIMPLEX	4098-9733 HEAD 4098-9792 BASE	4" OCT, 1-1/2" D	Mm Mi
		NOTIFICATION APPLIANCES				
2N	#	ADDRESSABLE MULTI-TONE HORN/STROBE ,WALL MOUNT, RED, FIRE	SIMPLEX	49MTV-WRF	SINGLE GANG 1-1/2" D	A
5N	#	ADDRESSABLE STROBE ,WALL MOUNT, RED, CLEAR LENS, FIRE	SIMPLEX	49VO-WRF	SINGLE GANG 1-1/2" D	A
2N	#	ADDRESSABLE MULTI-CANDELA STROBE ,CEILING MOUNT, APPLIANCE ONLY, CLEAR LENS	SIMPLEX	49VO-APPLC	4" SQ. 1-1/2" D	A
		CEILING MOUNT ADAPTER PLATE	SIMPLEX	49VO-APCS		
		APPLIANCE COVER, RED, FIRE LETTERING	SIMPLEX	49VOC-CRF		
		EXISTING CONVENTIONAL CHIME/STROBE - RED - WALL MOUNT	SIMPLEX	4903-9292		H V
		EXISTING CONVENTIONAL STROBE - RED - WALL MOUNT	SIMPLEX	4904-9137		V

FIRE ALARM WIRE LEGEND

	CIRCUIT DESCRIPTION	CONSTRUCTION	GAUGE	CIRCUIT PROPERTIES	ACCEPTABLE CABLE TYPES: FPLR	FPLP	THHN	TFFN	OUTDOOR**	C.I.
A	ADDRESSABLE NOTIFICATION	UTP SOLID	14 AWG	60pf/ft. MAX CAPACITANCE; 3 twists/ft. MINIMUM	X	X				
H	AUDIBLE CIRCUIT	2 COND. SOLID	14 AWG		X	X				
Mm	MAPNET	STP SOLID	16 AWG	60µF MAX TOTAL LINE CAPACITANCE	X	X				
Mi	IDNET	UTP SOLID	18 AWG	60µF MAX TOTAL LINE CAPACITANCE	X	X				
V	VISUAL	2 COND. SOLID	14 AWG		X	X				

CONDUIT SIZE	MAX CONDUCTOR AREA	CONDUIT SIZE	MAX CONDUCTOR AREA
1/2"	0.122 SQ. INCH*	1-1/4"	0.598 SQ INCH*
3/4"	0.213 SQ INCH*	1-1/2"	0.814 SQ INCH*
1"	0.346 SQ INCH*	2"	1.342 SQ INCH*

* 40% CONDUIT FILL PER N.E.C. STP = SHIELDED TWISTED PAIR

ITEMS SUCH AS CAPACITANCE BETWEEN CONDUCTORS AND WIRE GAUGE CAN BE CRUCIAL TO THE CIRCUIT DESIGN OF THIS SYSTEM INSTALLATION. THE INSTALLING CONTRACTOR IS RESPONSIBLE FOR SELECTING AND INSTALLING CABLE MANUFACTURER AND MODEL THAT MEETS OR EXCEEDS THE ABOVE REQUIREMENTS. RECOMMENDED CABLE MANUFACTURERS AND MODEL NUMBERS ARE AVAILABLE UPON REQUEST.

City of Aurora Building Division
Reviewed for Code Compliance
Approved as Noted: W. Polk
Date: Sep 07, 2022
2015 INTERNATIONAL CODES & 2020 NEC

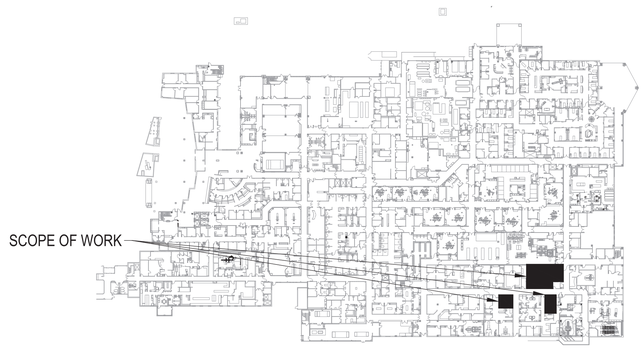

KEYPLAN

SCALE:N.T.S.

Johnson Controls
DISTRICT 1-415
15600 E JOHNSTON AVE
AURORA, CO 80017
SERVICE: 303-355-6000
PHONE: 303-350-9500
FAX: 303-355-9615

NICET CERTIFICATION INFORMATION
NANCY S. WILTSIE
NICET Fire Alarm, III
Certification #93727
Valid Through: 03/01/24
September 7, 2022

THE MEDICAL CENTER OF AURORA - SOUTH CAMPUS
CT 1 AND RAD ROOM 5

THE MEDICAL CENTER OF AURORA
1501 SOUTH POTOMAC STREET
AURORA, COLORADO 80012

Revisions shown with ⚠ symbol

ISSUE LOG: MARK	DATE:	CAD:	CHK:	DESCRIPTION
1	08/30/2022	CBR	NSW	PER CUSTOMER REQUEST DATED 08/30/2022
2	09/07/2022	CBR	NSW	CHANGES PER FIRE DEPARTMENT REVIEW DATED 09/03/2022

FOR PERMIT

DRAWN BY:	CBR
CHECKED BY:	NSW
ISSUE DATE:	7/5/22
JOB #:	
PROJECT #:	419-650184053

JOHNSON CONTROLS © 2022

SYSTEM: FIRE ALARM SYSTEM

SHEET: 1ST FLOOR BUILDOUT PARTIAL DEVICE PLACEMENT PLAN

FA-102

© Johnson Controls 2022. All rights reserved. Reuse, copying, modification or alteration of the drawings and other information contained herein is strictly prohibited.

FILE PATH: c:\Users\jnunchi\johnson controls\project electronics - medical center of aurora\1501 s potomac - aurora south\south tower - nodo 1\32-ct1 & adms5 - 2022 - 650184053\Fire\Fa-101.dwg
LAST SAVED BY: JNUNCHI
LAST PRINTED: 9/7/2022 12:49:16 PM
30" x 42" - Arch E1 Size

FIRE ALARM SYMBOL LEGEND

QTY	SYMBOL	DESCRIPTION	BRAND	MODEL	BACKBOX	WIRE TYPE
		INITIATING DEVICES				
5N	S	ADDRESSABLE PHOTOELECTRIC SMOKE SENSOR W/ STANDARD BASE	SIMPLEX	4098-9714 HEAD 4098-9792 BASE	4" OCT, 1-1/2" D	Mi
	2 OR S	EXISTING ADDRESSABLE PHOTOELECTRIC SMOKE SENSOR W/ EXISTING STANDARD BASE	SIMPLEX	4098-9714 HEAD 4098-9792 BASE	4" OCT, 1-1/2" D	Mm Mi
5N		ADDRESSABLE STANDARD HEAT SENSOR W/ STANDARD BASE	SIMPLEX	4098-9733 HEAD 4098-9792 BASE	4" OCT, 1-1/2" D	Mm Mi
		NOTIFICATION APPLIANCES				
2N	#	ADDRESSABLE MULTI-TONE HORN/STROBE ,WALL MOUNT, RED, FIRE	SIMPLEX	49MTV-WRF	SINGLE GANG 1-1/2" D	A
5N	#	ADDRESSABLE STROBE ,WALL MOUNT, RED, CLEAR LENS, FIRE	SIMPLEX	49VO-WRF	SINGLE GANG 1-1/2" D	A
2N	#	ADDRESSABLE MULTI-CANDELA STROBE ,CEILING MOUNT, APPLIANCE ONLY, CLEAR LENS	SIMPLEX	49VO-APPLC	4" SQ. 1-1/2" D	A
		CEILING MOUNT ADAPTER PLATE	SIMPLEX	49VO-APCS		
		APPLIANCE COVER, RED, FIRE LETTERING	SIMPLEX	49VOC-CRF		
		EXISTING CONVENTIONAL CHIME/STROBE - RED - WALL MOUNT	SIMPLEX	4903-9292		H V
		EXISTING CONVENTIONAL STROBE - RED - WALL MOUNT	SIMPLEX	4904-9137		V

FIRE ALARM WIRE LEGEND

	CIRCUIT DESCRIPTION	CONSTRUCTION	GAUGE	CIRCUIT PROPERTIES	ACCEPTABLE CABLE TYPES: FPLR	FPLP	THHN	TFFN	OUTDOOR **	C.L.
A	ADDRESSABLE NOTIFICATION	UTP SOLID	14 AWG	60pf/ft. MAX CAPACITANCE; 3 twists/ft. MINIMUM	X	X				
H	AUDIBLE CIRCUIT	2 COND. SOLID	14 AWG		X	X				
Mm	MAPNET	STP SOLID	16 AWG	60µF MAX TOTAL LINE CAPACITANCE	X	X				
Mi	IDNET	UTP SOLID	18 AWG	60µF MAX TOTAL LINE CAPACITANCE	X	X				
V	VISUAL	2 COND. SOLID	14 AWG		X	X				

CONDUIT SIZE	MAX CONDUCTOR AREA	CONDUIT SIZE	MAX CONDUCTOR AREA
1/2"	0.122 SQ. INCH*	1-1/4"	0.598 SQ INCH*
3/4"	0.213 SQ INCH*	1-1/2"	0.814 SQ INCH*
1"	0.346 SQ INCH*	2"	1.342 SQ INCH*

* 40% CONDUIT FILL PER N.E.C. STP = SHIELDED TWISTED PAIR

ITEMS SUCH AS CAPACITANCE BETWEEN CONDUCTORS AND WIRE GAUGE CAN BE CRUCIAL TO THE CIRCUIT DESIGN OF THIS SYSTEM INSTALLATION. THE INSTALLING CONTRACTOR IS RESPONSIBLE FOR SELECTING AND INSTALLING CABLE MANUFACTURER AND MODEL THAT MEETS OR EXCEEDS THE ABOVE REQUIREMENTS. RECOMMENDED CABLE MANUFACTURERS AND MODEL NUMBERS ARE AVAILABLE UPON REQUEST.

RISER NOTES:

1. RISER IS A DIAGRAMMATICAL REPRESENTATION OF THE SYSTEM ARCHITECTURE IN BUILDING CROSS SECTION. IT IS NOT INTENDED TO REPRESENT ACTUAL WIRE RUNS, PANEL CONFIGURATIONS OR PENETRATIONS. REFER TO FLOOR PLANS AND PANEL DETAILS FOR CIRCUIT ROUTING AND CONFIGURATION INFORMATION.
2. ALL WIRING SHALL COMPLY WITH APPLICABLE ELECTRICAL CODES. REFER TO "APPLICABLE CODES & STANDARDS" ON SHEET FA-001 FOR SPECIFIC CODE REFERENCES.
3. THE INFORMATION OR SYMBOLS SHOWN IN BOLD LINETYPE ARE NEW OR RELOCATED.
4. THE INFORMATION OR SYMBOLS SHOWN IN LIGHT LINETYPE ARE EXISTING.
5. ALL ITEMS THAT ARE HATCHED ARE NOT IN THIS SCOPE OF WORK.
7. NOTIFICATION WIRING WILL BE CLASS A TO THE FIRE ALARM TERMINAL CABINET IN EQUIPMENT STORAGE 1RD017 AND CLASS B TO THE FIELD DEVICES PER IFC 907.6.1.2.3.

KEYED NOTES:

1. 120VAC PRIMARY POWER SOURCE SHALL BE A MECHANICALLY PROTECTED BRANCH CIRCUIT. THE CIRCUIT DISCONNECTING MEANS SHALL HAVE A RED MARKING, AND BE IDENTIFIED AS "FIRE ALARM CIRCUIT"

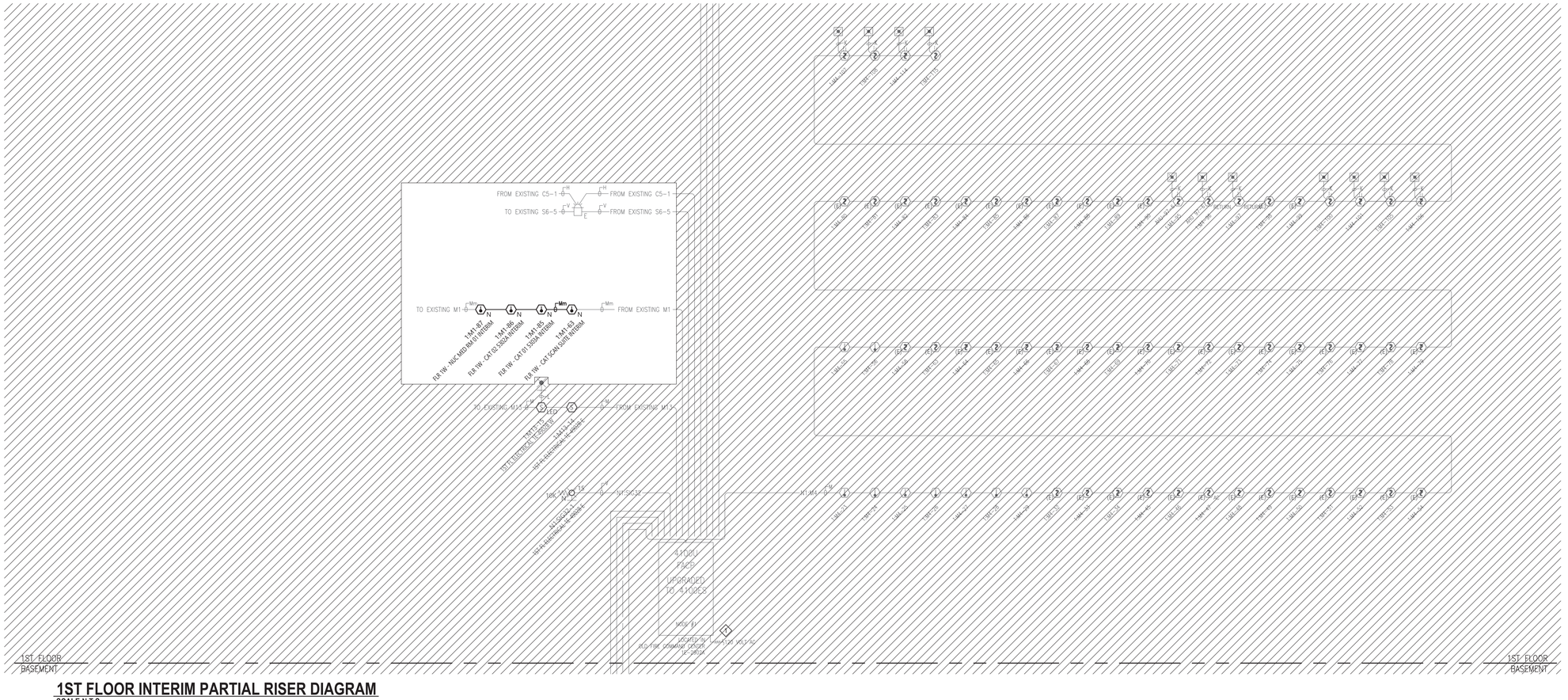
1ST FLOOR
BASEMENT
FROM EXISTING C5-1
TO EXISTING S6-5
FROM EXISTING C5-1
FROM EXISTING S6-5
TO EXISTING M1
FROM EXISTING M1
1M1-67
FLR 1W - NUC MED RM 01 INTERM
1M1-66
FLR 1W - CAT 02 - 530A INTERM
1M1-65
FLR 1W - CAT 01 - 530A INTERM
1M1-63
FLR 1W - CAT SCAN SUITE INTERM
TO EXISTING M13
FROM EXISTING M13
1MIT-15
1ST FLOOR ELECTRICAL ROOM
1AA13-14
1ST FLR ANNUNCIATOR PANEL
10K
M1-SC32
1AA13-13
1ST FLR ANNUNCIATOR PANEL
4100U
FACP
UPGRADED
TO 4100ES
MDF #1
LOCATED IN
MID-TIER COMMSU ROOM
1E-2402K
Vrms 120 VOLT AC
M1-M14
1AA1-CC
1MIT-CC
1AA1-DD
1MIT-DD
1AA1-EE
1MIT-EE
1AA1-FF
1MIT-FF
1AA1-GG
1MIT-GG
1AA1-HH
1MIT-HH
1AA1-JJ
1MIT-JJ
1AA1-KK
1MIT-KK
1AA1-LL
1MIT-LL
1AA1-MM
1MIT-MM
1AA1-NN
1MIT-NN
1AA1-PP
1MIT-PP
1AA1-QQ
1MIT-QQ
1AA1-RR
1MIT-RR
1AA1-SS
1MIT-SS
1AA1-TT
1MIT-TT
1AA1-UU
1MIT-UU
1AA1-VV
1MIT-VV
1AA1-WW
1MIT-WW
1AA1-XX
1MIT-XX
1AA1-YY
1MIT-YY
1AA1-ZZ
1MIT-ZZ
1AA1-AAA
1MIT-AAA
1AA1-BBB
1MIT-BBB
1AA1-CCC
1MIT-CCC
1AA1-DDD
1MIT-DDD
1AA1-EEE
1MIT-EEE
1AA1-FFF
1MIT-FFF
1AA1-GGG
1MIT-GGG
1AA1-HHH
1MIT-HHH
1AA1-JJJ
1MIT-JJJ
1AA1-KKK
1MIT-KKK
1AA1-LLL
1MIT-LLL
1AA1-MMM
1MIT-MMM
1AA1-NNN
1MIT-NNN
1AA1-PPP
1MIT-PPP
1AA1-QQQ
1MIT-QQQ
1AA1-RRR
1MIT-RRR
1AA1-SSS
1MIT-SSS
1AA1-TTT
1MIT-TTT
1AA1-UUU
1MIT-UUU
1AA1-VVV
1MIT-VVV
1AA1-WWW
1MIT-WWW
1AA1-XXX
1MIT-XXX
1AA1-YYY
1MIT-YYY
1AA1-ZZZ
1MIT-ZZZ
1AA1-AAAA
1MIT-AAAA
1AA1-BBBB
1MIT-BBBB
1AA1-CCCC
1MIT-CCCC
1AA1-DDDD
1MIT-DDDD
1AA1-EEEE
1MIT-EEEE
1AA1-FFFF
1MIT-FFFF
1AA1-GGGG
1MIT-GGGG
1AA1-HHHH
1MIT-HHHH
1AA1-JJJJ
1MIT-JJJJ
1AA1-KKKK
1MIT-KKKK
1AA1-LLLL
1MIT-LLLL
1AA1-MMMM
1MIT-MMMM
1AA1-NNNN
1MIT-NNNN
1AA1-PPPP
1MIT-PPPP
1AA1-QQQQ
1MIT-QQQQ
1AA1-RRRR
1MIT-RRRR
1AA1-SSSS
1MIT-SSSS
1AA1-TTTT
1MIT-TTTT
1AA1-UUUU
1MIT-UUUU
1AA1-VVVV
1MIT-VVVV
1AA1-WWWW
1MIT-WWWW
1AA1-XXXX
1MIT-XXXX
1AA1-YYYY
1MIT-YYYY
1AA1-ZZZZ
1MIT-ZZZZ
1AA1-AAAAA
1MIT-AAAAA
1AA1-BBBBB
1MIT-BBBBB
1AA1-CCCCC
1MIT-CCCCC
1AA1-DDDDD
1MIT-DDDDD
1AA1-EEEEE
1MIT-EEEEE
1AA1-FFFFF
1MIT-FFFFF
1AA1-GGGGG
1MIT-GGGGG
1AA1-HHHHH
1MIT-HHHHH
1AA1-JJJJJ
1MIT-JJJJJ
1AA1-KKKKK
1MIT-KKKKK
1AA1-LLLLL
1MIT-LLLLL
1AA1-MMMMM
1MIT-MMMMM
1AA1-NNNNN
1MIT-NNNNN
1AA1-PPPPP
1MIT-PPPPP
1AA1-QQQQQ
1MIT-QQQQQ
1AA1-RRRRR
1MIT-RRRRR
1AA1-SSSSS
1MIT-SSSSS
1AA1-TTTTT
1MIT-TTTTT
1AA1-UUUUU
1MIT-UUUUU
1AA1-VVVVV
1MIT-VVVVV
1AA1-WWWWW
1MIT-WWWWW
1AA1-XXXXX
1MIT-XXXXX
1AA1-YYYYY
1MIT-YYYYY
1AA1-ZZZZZ
1MIT-ZZZZZ
1AA1-AAAAAA
1MIT-AAAAAA
1AA1-BBBBBB
1MIT-BBBBBB
1AA1-CCCCCC
1MIT-CCCCCC
1AA1-DDDDDD
1MIT-DDDDDD
1AA1-EEEEEE
1MIT-EEEEEE
1AA1-FFFFFF
1MIT-FFFFFF
1AA1-GGGGGG
1MIT-GGGGGG
1AA1-HHHHHH
1MIT-HHHHHH
1AA1-JJJJJJ
1MIT-JJJJJJ
1AA1-KKKKKK
1MIT-KKKKKK
1AA1-LLLLLL
1MIT-LLLLLL
1AA1-MMMMMM
1MIT-MMMMMM
1AA1-NNNNNN
1MIT-NNNNNN
1AA1-PPPPPP
1MIT-PPPPPP
1AA1-QQQQQQ
1MIT-QQQQQQ
1AA1-RRRRRR
1MIT-RRRRRR
1AA1-SSSSSS
1MIT-SSSSSS
1AA1-TTTTTT
1MIT-TTTTTT
1AA1-UUUUUU
1MIT-UUUUUU
1AA1-VVVVVV
1MIT-VVVVVV
1AA1-WWWWWW
1MIT-WWWWWW
1AA1-XXXXXX
1MIT-XXXXXX
1AA1-YYYYYY
1MIT-YYYYYY
1AA1-ZZZZZZ
1MIT-ZZZZZZ
1AA1-AAAAAAA
1MIT-AAAAAAA
1AA1-BBBBBBB
1MIT-BBBBBBB
1AA1-CCCCCCC
1MIT-CCCCCCC
1AA1-DDDDDDD
1MIT-DDDDDDD
1AA1-EEEEEEE
1MIT-EEEEEEE
1AA1-FFFFFFF
1MIT-FFFFFFF
1AA1-GGGGGGG
1MIT-GGGGGGG
1AA1-HHHHHHH
1MIT-HHHHHHH
1AA1-JJJJJJJ
1MIT-JJJJJJJ
1AA1-KKKKKKK
1MIT-KKKKKKK
1AA1-LLLLLLL
1MIT-LLLLLLL
1AA1-MMMMMMM
1MIT-MMMMMMM
1AA1-NNNNNNN
1MIT-NNNNNNN
1AA1-PPPPPPP
1MIT-PPPPPPP
1AA1-QQQQQQQ
1MIT-QQQQQQQ
1AA1-RRRRRRR
1MIT-RRRRRRR
1AA1-SSSSSSS
1MIT-SSSSSSS
1AA1-TTTTTTT
1MIT-TTTTTTT
1AA1-UUUUUUU
1MIT-UUUUUUU
1AA1-VVVVVVV
1MIT-VVVVVVV
1AA1-WWWWWWW
1MIT-WWWWWWW
1AA1-XXXXXXX
1MIT-XXXXXXX
1AA1-YYYYYYY
1MIT-YYYYYYY
1AA1-ZZZZZZZ
1MIT-ZZZZZZZ
1AA1-AAAAAAAA
1MIT-AAAAAAAA
1AA1-BBBBBBBB
1MIT-BBBBBBBB
1AA1-CCCCCCCC
1MIT-CCCCCCCC
1AA1-DDDDDDDD
1MIT-DDDDDDDD
1AA1-EEEEEEEE
1MIT-EEEEEEEE
1AA1-FFFFFFFF
1MIT-FFFFFFFF
1AA1-GGGGGGGG
1MIT-GGGGGGGG
1AA1-HHHHHHHH
1MIT-HHHHHHHH
1AA1-JJJJJJJJ
1MIT-JJJJJJJJ
1AA1-KKKKKKKK
1MIT-KKKKKKKK
1AA1-LLLLLLLL
1MIT-LLLLLLLL
1AA1-MMMMMMMM
1MIT-MMMMMMMM
1AA1-NNNNNNNN
1MIT-NNNNNNNN
1AA1-PPPPPPPP
1MIT-PPPPPPPP
1AA1-QQQQQQQQ
1MIT-QQQQQQQQ
1AA1-RRRRRRRR
1MIT-RRRRRRRR
1AA1-SSSSSSSS
1MIT-SSSSSSSS
1AA1-TTTTTTTT
1MIT-TTTTTTTT
1AA1-UUUUUUUU
1MIT-UUUUUUUU
1AA1-VVVVVVVV
1MIT-VVVVVVVV
1AA1-WWWWWWWW
1MIT-WWWWWWWW
1AA1-XXXXXXXX
1MIT-XXXXXXXX
1AA1-YYYYYYYY
1MIT-YYYYYYYY
1AA1-ZZZZZZZZ
1MIT-ZZZZZZZZ
1AA1-AAAAAAAAA
1MIT-AAAAAAAAA
1AA1-BBBBBBBBB
1MIT-BBBBBBBBB
1AA1-CCCCCCCCC
1MIT-CCCCCCCCC
1AA1-DDDDDDDDD
1MIT-DDDDDDDDD
1AA1-EEEEEEEEE
1MIT-EEEEEEEEE
1AA1-FFFFFFFFF
1MIT-FFFFFFFFF
1AA1-GGGGGGGGG
1MIT-GGGGGGGGG
1AA1-HHHHHHHHH
1MIT-HHHHHHHHH
1AA1-JJJJJJJJJ
1MIT-JJJJJJJJJ
1AA1-KKKKKKKKK
1MIT-KKKKKKKKK
1AA1-LLLLLLLLL
1MIT-LLLLLLLLL
1AA1-MMMMMMMMM
1MIT-MMMMMMMMM
1AA1-NNNNNNNNN
1MIT-NNNNNNNNN
1AA1-PPPPPPPPP
1MIT-PPPPPPPPP
1AA1-QQQQQQQQQ
1MIT-QQQQQQQQQ
1AA1-RRRRRRRRR
1MIT-RRRRRRRRR
1AA1-SSSSSSSSS
1MIT-SSSSSSSSS
1AA1-TTTTTTTTT
1MIT-TTTTTTTTT
1AA1-UUUUUUUUU
1MIT-UUUUUUUUU
1AA1-VVVVVVVVV
1MIT-VVVVVVVVV
1AA1-WWWWWWWWW
1MIT-WWWWWWWWW
1AA1-XXXXXXXXX
1MIT-XXXXXXXXX
1AA1-YYYYYYYYY
1MIT-YYYYYYYYY
1AA1-ZZZZZZZZZ
1MIT-ZZZZZZZZZ
1AA1-AAAAAAAAAA
1MIT-AAAAAAAAAA
1AA1-BBBBBBBBBB
1MIT-BBBBBBBBBB
1AA1-CCCCCCCCCC
1MIT-CCCCCCCCCC
1AA1-DDDDDDDDDD
1MIT-DDDDDDDDDD
1AA1-EEEEEEEEEE
1MIT-EEEEEEEEEE
1AA1-FFFFFFFFFF
1MIT-FFFFFFFFFF
1AA1-GGGGGGGGGG
1MIT-GGGGGGGGGG
1AA1-HHHHHHHHHH
1MIT-HHHHHHHHHH
1AA1-JJJJJJJJJJ
1MIT-JJJJJJJJJJ
1AA1-KKKKKKKKKK
1MIT-KKKKKKKKKK
1AA1-LLLLLLLLLL
1MIT-LLLLLLLLLL
1AA1-MMMMMMMMMM
1MIT-MMMMMMMMMM
1AA1-NNNNNNNNNN
1MIT-NNNNNNNNNN
1AA1-PPPPPPPPPP
1MIT-PPPPPPPPPP
1AA1-QQQQQQQQQQ
1MIT-QQQQQQQQQQ
1AA1-RRRRRRRRRR
1MIT-RRRRRRRRRR
1AA1-SSSSSSSSSS
1MIT-SSSSSSSSSS
1AA1-TTTTTTTTTT
1MIT-TTTTTTTTTT
1AA1-UUUUUUUUUU
1MIT-UUUUUUUUUU
1AA1-VVVVVVVVVV
1MIT-VVVVVVVVVV
1AA1-WWWWWWWWWW
1MIT-WWWWWWWWWW
1AA1-XXXXXXXXXX
1MIT-XXXXXXXXXX
1AA1-YYYYYYYYYY
1MIT-YYYYYYYYYY
1AA1-ZZZZZZZZZZ
1MIT-ZZZZZZZZZZ
1AA1-AAAAAAAAAAA
1MIT-AAAAAAAAAAA
1AA1-BBBBBBBBBBB
1MIT-BBBBBBBBBBB
1AA1-CCCCCCCCCCC
1MIT-CCCCCCCCCCC
1AA1-DDDDDDDDDDD
1MIT-DDDDDDDDDDD
1AA1-EEEEEEEEEEE
1MIT-EEEEEEEEEEE
1AA1-FFFFFFFFFFF
1MIT-FFFFFFFFFFF
1AA1-GGGGGGGGGGG
1MIT-GGGGGGGGGGG
1AA1-HHHHHHHHHHH
1MIT-HHHHHHHHHHH
1AA1-JJJJJJJJJJJ
1MIT-JJJJJJJJJJJ
1AA1-KKKKKKKKKKK
1MIT-KKKKKKKKKKK
1AA1-LLLLLLLLLLL
1MIT-LLLLLLLLLLL
1AA1-MMMMMMMMMMM
1MIT-MMMMMMMMMMM
1AA1-NNNNNNNNNNN
1MIT-NNNNNNNNNNN
1AA1-PPPPPPPPPPP
1MIT-PPPPPPPPPPP
1AA1-QQQQQQQQQQQ
1MIT-QQQQQQQQQQQ
1AA1-RRRRRRRRRRR
1MIT-RRRRRRRRRRR
1AA1-SSSSSSSSSSS
1MIT-SSSSSSSSSSS
1AA1-TTTTTTTTTTT
1MIT-TTTTTTTTTTT
1AA1-UUUUUUUUUUU
1MIT-UUUUUUUUUUU
1AA1-VVVVVVVVVVV
1MIT-VVVVVVVVVVV
1AA1-WWWWWWWWWWW
1MIT-WWWWWWWWWWW
1AA1-XXXXXXXXXXX
1MIT-XXXXXXXXXXX
1AA1-YYYYYYYYYYY
1MIT-YYYYYYYYYYY
1AA1-ZZZZZZZZZZZ
1MIT-ZZZZZZZZZZZ
1AA1-AAAAAAAAAAAA
1MIT-AAAAAAAAAAAA
1AA1-BBBBBBBBBBBB
1MIT-BBBBBBBBBBBB
1AA1-CCCCCCCCCCCC
1MIT-CCCCCCCCCCCC
1AA1-DDDDDDDDDDDD
1MIT-DDDDDDDDDDDD
1AA1-EEEEEEEEEEEE
1MIT-EEEEEEEEEEEE
1AA1-FFFFFFFFFFFF
1MIT-FFFFFFFFFFFF
1AA1-GGGGGGGGGGGG
1MIT-GGGGGGGGGGGG
1AA1-HHHHHHHHHHHH
1MIT-HHHHHHHHHHHH
1AA1-JJJJJJJJJJJJ
1MIT-JJJJJJJJJJJJ
1AA1-KKKKKKKKKKKK
1MIT-KKKKKKKKKKKK
1AA1-LLLLLLLLLLLL
1MIT-LLLLLLLLLLLL
1AA1-MMMMMMMMMMMM
1MIT-MMMMMMMMMMMM
1AA1-NNNNNNNNNNNN
1MIT-NNNNNNNNNNNN
1AA1-PPPPPPPPPPPP
1MIT-PPPPPPPPPPPP
1AA1-QQQQQQQQQQQQ
1MIT-QQQQQQQQQQQQ
1AA1-RRRRRRRRRRRR
1MIT-RRRRRRRRRRRR
1AA1-SSSSSSSSSSSS
1MIT-SSSSSSSSSSSS
1AA1-TTTTTTTTTTTT
1MIT-TTTTTTTTTTTT
1AA1-UUUUUUUUUUUU
1MIT-UUUUUUUUUUUU
1AA1-VVVVVVVVVVVV
1MIT-VVVVVVVVVVVV
1AA1-WWWWWWWWWWWW
1MIT-WWWWWWWWWWWW
1AA1-XXXXXXXXXXXX
1MIT-XXXXXXXXXXXX
1AA1-YYYYYYYYYYYY
1MIT-YYYYYYYYYYYY
1AA1-ZZZZZZZZZZZZ
1MIT-ZZZZZZZZZZZZ
1AA1-AAAAAAAAAAAAA
1MIT-AAAAAAAAAAAAA
1AA1-BBBBBBBBBBBBB
1MIT-BBBBBBBBBBBBB
1AA1-CCCCCCCCCCCCC
1MIT-CCCCCCCCCCCCC
1AA1-DDDDDDDDDDDDD
1MIT-DDDDDDDDDDDDD
1AA1-EEEEEEEEEEEEE
1MIT-EEEEEEEEEEEEE
1AA1-FFFFFFFFFFFFF
1MIT-FFFFFFFFFFFFF
1AA1-GGGGGGGGGGGGG
1MIT-GGGGGGGGGGGGG
1AA1-HHHHHHHHHHHHH
1MIT-HHHHHHHHHHHHH
1AA1-JJJJJJJJJJJJJ
1MIT-JJJJJJJJJJJJJ
1AA1-KKKKKKKKKKKKK
1MIT-KKKKKKKKKKKKK
1AA1-LLLLLLLLLLLLL
1MIT-LLLLLLLLLLLLL
1AA1-MMMMMMMMMMMMM
1MIT-MMMMMMMMMMMMM
1AA1-NNNNNNNNNNNNN
1MIT-NNNNNNNNNNNNN
1AA1-PPPPPPPPPPPPP
1MIT-PPPPPPPPPPPPP
1AA1-QQQQQQQQQQQQQ
1MIT-QQQQQQQQQQQQQ
1AA1-RRRRRRRRRRRRR
1MIT-RRRRRRRRRRRRR
1AA1-SSSSSSSSSSSSS
1MIT-SSSSSSSSSSSSS
1AA1-TTTTTTTTTTTTT
1MIT-TTTTTTTTTTTTT
1AA1-UUUUUUUUUUUUU
1MIT-UUUUUUUUUUUUU
1AA1-VVVVVVVVVVVVV
1MIT-VVVVVVVVVVVVV
1AA1-WWWWWWWWWWWWW
1MIT-WWWWWWWWWWWWW
1AA1-XXXXXXXXXXXXX
1MIT-XXXXXXXXXXXXX
1AA1-YYYYYYYYYYYYY
1MIT-YYYYYYYYYYYYY
1AA1-ZZZZZZZZZZZZZ
1MIT-ZZZZZZZZZZZZZ
1AA1-AAAAAAAAAAAAAA
1MIT-AAAAAAAAAAAAAA
1AA1-BBBBBBBBBBBBBB
1MIT-BBBBBBBBBBBBBB
1AA1-CCCCCCCCCCCCCC
1MIT-CCCCCCCCCCCCCC
1AA1-DDDDDDDDDDDDDD
1MIT-DDDDDDDDDDDDDD
1AA1-EEEEEEEEEEEEEE
1MIT-EEEEEEEEEEEEEE
1AA1-FFFFFFFFFFFFFF
1MIT-FFFFFFFFFFFFFF
1AA1-GGGGGGGGGGGGGG
1MIT-GGGGGGGGGGGGGG
1AA1-HHHHHHHHHHHHHH
1MIT-HHHHHHHHHHHHHH
1AA1-JJJJJJJJJJJJJJ
1MIT-JJJJJJJJJJJJJJ
1AA1-KKKKKKKKKKKKKK
1MIT-KKKKKKKKKKKKKK
1AA1-LLLLLLLLLLLLLL
1MIT-LLLLLLLLLLLLLL
1AA1-MMMMMMMMMMMMMM
1MIT-MMMMMMMMMMMMMM
1AA1-NNNNNNNNNNNNNN
1MIT-NNNNNNNNNNNNNN
1AA1-PPPPPPPPPPPPPP
1MIT-PPPPPPPPPPPPPP
1AA1-QQQQQQQQQQQQQQ
1MIT-QQQQQQQQQQQQQQ
1AA1-RRRRRRRRRRRRRR
1MIT-RRRRRRRRRRRRRR
1AA1-SSSSSSSSSSSSSS
1MIT-SSSSSSSSSSSSSS
1AA1-TTTTTTTTTTTTTT
1MIT-TTTTTTTTTTTTTT
1AA1-UUUUUUUUUUUUUU
1MIT-UUUUUUUUUUUUUU
1AA1-VVVVVVVVVVVVVV
1MIT-VVVVVVVVVVVVVV
1AA1-WWWWWWWWWWWWWW
1MIT-WWWWWWWWWWWWWW
1AA1-XXXXXXXXXXXXXX
1MIT-XXXXXXXXXXXXXX
1AA1-YYYYYYYYYYYYYY
1MIT-YYYYYYYYYYYYYY
1AA1-ZZZZZZZZZZZZZZ
1MIT-ZZZZZZZZZZZZZZ
1AA1-AAAAAAAAAAAAAAA
1MIT-AAAAAAAAAAAAAAA
1AA1-BBBBBBBBBBBBBBB
1MIT-BBBBBBBBBBBBBBB
1AA1-CCCCCCCCCCCCCCC
1MIT-CCCCCCCCCCCCCCC
1AA1-DDDDDDDDDDDDDDD
1MIT-DDDDDDDDDDDDDDD
1AA1-EEEEEEEEEEEEEEE
1MIT-EEEEEEEEEEEEEEE
1AA1-FFFFFFFFFFFFFFF
1MIT-FFFFFFFFFFFFFFF
1AA1-GGGGGGGGGGGGGGG
1MIT-GGGGGGGGGGGGGGG
1AA1-HHHHHHHHHHHHHHH
1MIT-HHHHHHHHHHHHHHH
1AA1-JJJJJJJJJJJJJJJ
1MIT-JJJJJJJJJJJJJJJ
1AA1-KKKKKKKKKKKKKKK
1MIT-KKKKKKKKKKKKKKK
1AA1-LLLLLLLLLLLLLLL
1MIT-LLLLLLLLLLLLLLL
1AA1-MMMMMMMMMMMMMMM
1MIT-MMMMMMMMMMMMMMM
1AA1-NNNNNNNNNNNNNNN
1MIT-NNNNNNNNNNNNNNN
1AA1-PPPPPPPPPPPPPPP
1MIT-PPPPPPPPPPPPPPP
1AA1-QQQQQQQQQQQQQQQ
1MIT-QQQQQQQQQQQQQQQ
1AA1-RRRRRRRRRRRRRRR
1MIT-RRRRRRRRRRRRRRR
1AA1-SSSSSSSSSSSSSSS
1MIT-SSSSSSSSSSSSSSS
1AA1-TTTTTTTTTTTTTTT
1MIT-TTTTTTTTTTTTTTT
1AA1-UUUUUUUUUUUUUUU
1MIT-UUUUUUUUUUUUUUU
1AA1-VVVVVVVVVVVVVVV
1MIT-VVVVVVVVVVVVVVV
1AA1-WWWWWWWWWWWWWWW
1MIT-WWWWWWWWWWWWWWW
1AA1-XXXXXXXXXXXXXXX
1MIT-XXXXXXXXXXXXXXX
1AA1-YYYYYYYYYYYYYYY
1MIT-YYYYYYYYYYYYYYY
1AA1-ZZZZZZZZZZZZZZZ
1MIT-ZZZZZZZZZZZZZZZ
1AA1-AAAAAAAAAAAAAAAA
1MIT-AAAAAAAAAAAAAAAA
1AA1-BBBBBBBBBBBBBBBB
1MIT-BBBBBBBBBBBBBBBB
1AA1-CCCCCCCCCCCCCCCC
1MIT-CCCCCCCCCCCCCCCC
1AA1-DDDDDDDDDDDDDDDD
1MIT-DDDDDDDDDDDDDDDD
1AA1-EEEEEEEEEEEEEEEE
1MIT-EEEEEEEEEEEEEEEE
1AA1-FFFFFFFFFFFFFFFF
1MIT-FFFFFFFFFFFFFFFF
1AA1-GGGGGGGGGGGGGGGG
1MIT-GGGGGGGGGGGGGGGG
1AA1-HHHHHHHHHHHHHHHH
1MIT-HHHHHHHHHHHHHHHH
1AA1-JJJJJJJJJJJJJJJJ
1MIT-JJJJJJJJJJJJJJJJ
1AA1-KKKKKKKKKKKKKKKK
1MIT-KKKKKKKKKKKKKKKK
1AA1-LLLLLLLLLLLLLLLL
1MIT-LLLLLLLLLLLLLLLL
1AA1-MMMMMMMMMMMMMMMM
1MIT-MMMMMMMMMMMMMMMM
1AA1-NNNNNNNNNNNNNNNN
1MIT-NNNNNNNNNNNNNNNN
1AA1-PPPPPPPPPPPPPPPP
1MIT-PPPPPPPPPPPPPPPP
1AA1-QQQQQQQQQQQQQQQQ
1MIT-QQQQQQQQQQQQQQQQ
1AA1-RRRRRRRRRRRRRRRR
1MIT-RRRRRRRRRRRRRRRR
1AA1-SSSSSSSSSSSSSSSS
1MIT-SSSSSSSSSSSSSSSS
1AA1-TTTTTTTTTTTTTTTT
1MIT-TTTTTTTTTTTTTTTT
1AA1-UUUUUUUUUUUUUUUU
1MIT-UUUUUUUUUUUUUUUU
1AA1-VVVVVVVVVVVVVVVV
1MIT-VVVVVVVVVVVVVVVV
1AA1-WWWWWWWWWWWWWWWW
1MIT-WWWWWWWWWWWWWWWW
1AA1-XXXXXXXXXXXXXXXX
1MIT-XXXXXXXXXXXXXXXX
1AA1-YYYYYYYYYYYYYYYY
1MIT-YYYYYYYYYYYYYYYY
1AA1-ZZZZZZZZZZZZZZZZ
1MIT-ZZZZZZZZZZZZZZZZ
1AA1-AAAAAAAAAAAAAAAAA
1MIT-AAAAAAAAAAAAAAAAA
1AA1-BBBBBBBBBBBBBBBBB
1MIT-BBBBBBBBBBBBBBBBB
1AA1-CCCCCCCCCCCCCCCCC
1MIT-CCCCCCCCCCCCCCCCC
1AA1-DDDDDDDDDDDDDDDDD
1MIT-DDDDDDDDDDDDDDDDD
1AA1-EEEEEEEEEEEEEEEEE
1MIT-EEEEEEEEEEEEEEEEE
1AA1-FFFFFFFFFFFFFFFFF
1MIT-FFFFFFFFFFFFFFFFF
1AA1-GGGGGGGGGGGGGGGGG
1MIT-GGGGGGGGGGGGGGGGG
1AA1-HHHHHHHHHHHHHHHHH
1MIT-HHHHHHHHHHHHHHHHH
1AA1-JJJJJJJJJJJJJJJJJ
1MIT-JJJJJJJJJJJJJJJJJ
1AA1-KKKKKKKKKKKKKKKKK
1MIT-KKKKKKKKKKKKKKKKK
1AA1-LLLLLLLLLLLLLLLLL
1MIT-LLLLLLLLLLLLLLLLL
1AA1-MMMMMMMMMMMMMMMMM
1MIT-MMMMMMMMMMMMMMMMM
1AA1-NNNNNNNNNNNNNNNNN
1MIT-NNNNNNNNNNNNNNNNN
1AA1-PPPPPPPPPPPPPPPPP
1MIT-PPPPPPPPPPPPPPPPP
1AA1-QQQQQQQQQQQQQQQQQ
1MIT-QQQQQQQQQQQQQQQQQ
1AA1-RRRRRRRRRRRRRRRRR
1MIT-RRRRRRRRRRRRRRRRR
1AA1-SSSSSSSSSSSSSSSSS
1MIT-SSSSSSSSSSSSSSSSS
1AA1-TTTTTTTTTTTTTTTTT
1MIT-TTTTTTTTTTTTTTTTT
1AA1-UUUUUUUUUUUUUUUUU
1MIT-UUUUUUUUUUUUUUUUU
1AA1-VVVVVVVVVVVVVVVVV
1MIT-VVVVVVVVVVVVVVVVV
1AA1-WWWWWWWWWWWWWWWWW
1MIT-WWWWWWWWWWWWWWWWW
1AA1-XXXXXXXXXXXXXXXXX
1MIT-XXXXXXXXXXXXXXXXX
1AA1-YYYYYYYYYYYYYYYYY
1MIT-YYYYYYYYYYYYYYYYY
1AA1-ZZZZZZZZZZZZZZZZZ
1MIT-ZZZZZZZZZZZZZZZZZ
1AA1-AAAAAAAAAAAAAAAAAA
1MIT-AAAAAAAAAAAAAAAAAA
1AA1-BBBBBBBBBBBBBBBBBB
1MIT-BBBBBBBBBBBBBBBBBB
1AA1-CCCCCCCCCCCCCCCCCC
1MIT-CCCCCCCCCCCCCCCCCC
1AA1-DDDDDDDDDDDDDDDDDD
1MIT-DDDDDDDDDDDDDDDDDD
1AA1-EEEEEEEEEEEEEEEEEE
1MIT-EEEEEEEEEEEEEEEEEE
1AA1-FFFFFFFFFFFFFFFFFF
1MIT-FFFFFFFFFFFFFFFFFF
1AA1-GGGGGGGGGGGGGGGGGG
1MIT-GGGGGGGGGGGGGGGGGG
1AA1-HHHHHHHHHHHHHHHHHH
1MIT-HHHHHHHHHHHHHHHHHH
1AA1-JJJJJJJJJJJJJJJJJJ
1MIT-JJJJJJJJJJJJJJJJJJ
1AA1-KKKKKKKKKKKKKKKKKK
1MIT-KKKKKKKKKKKKKKKKKK
1AA1-LLLLLLLLLLLLLLLLLL
1MIT-LLLLLLLLLLLLLLLLLL
1AA1-MMMMMMMMMMMMMMMMMM
1MIT-MMMMMMMMMMMMMMMMMM
1AA1-NNNNNNNNNNNNNNNNNN
1MIT-NNNNNNNNNNNNNNNNNN
1AA1-PPPPPPPPPPPPPPPPPP
1MIT-PPPPPPPPPPPPPPPPPP
1AA1-QQQQQQQQQQQQQQQQQQ
1MIT-QQQQQQQQQQQQQQQQQQ
1AA1-RRRRRRRRRRRRRRRRRR
1MIT-RRRRRRRRRRRRRRRRRR
1AA1-SSSSSSSSSSSSSSSSSS
1MIT-SSSSSSSSSSSSSSSSSS
1AA1-TTTTTTTTTTTTTTTTTT
1MIT-TTTTTTTTTTTTTTTTTT
1AA1-UUUUUUUUUUUUUUUUUU
1MIT-UUUUUUUUUUUUUUUUUU
1AA1-VVVVVVVVVVVVVVVVVV
1MIT-VVVVVVVVVVVVVVVVVV
1AA1-WWWWWWWWWWWWWWWWWW
1MIT-WWWWWWWWWWW

FIRE ALARM SYMBOL LEGEND

QTY	SYMBOL	DESCRIPTION	BRAND	MODEL	BACKBOX	WIRE TYPE
		INITIATING DEVICES				
5N	(S)	ADDRESSABLE PHOTOELECTRIC SMOKE SENSOR W/ STANDARD BASE	SIMPLEX	4098-9714 HEAD	4" OCT, 1-1/2" D	Mi
				4098-9792 BASE		
	(2) OR (S)	EXISTING ADDRESSABLE PHOTOELECTRIC SMOKE SENSOR W/ EXISTING STANDARD BASE	SIMPLEX	4098-9714 HEAD	4" OCT, 1-1/2" D	Mm
				4098-9792 BASE		Mi
5N		ADDRESSABLE STANDARD HEAT SENSOR W/ STANDARD BASE	SIMPLEX	4098-9733 HEAD	4" OCT, 1-1/2" D	Mm
				4098-9792 BASE		Mi
		NOTIFICATION APPLIANCES				
2N	#	ADDRESSABLE MULTI-TONE HORN/STROBE ,WALL MOUNT, RED, FIRE	SIMPLEX	49MTV-WRF	SINGLE GANG 1-1/2" D	A
5N	#	ADDRESSABLE STROBE ,WALL MOUNT, RED, CLEAR LENS, FIRE	SIMPLEX	49VO-WRF	SINGLE GANG 1-1/2" D	A
2N	#	ADDRESSABLE MULTI-CANDELA STROBE ,CEILING MOUNT, APPLIANCE ONLY, CLEAR LENS	SIMPLEX	49VO-APPLC	4" SQ. 1-1/2" D	A
		CEILING MOUNT ADAPTER PLATE	SIMPLEX	49VO-APCS		
		APPLIANCE COVER, RED, FIRE LETTERING	SIMPLEX	49VOC-CRF		
		EXISTING CONVENTIONAL CHIME/STROBE - RED - WALL MOUNT	SIMPLEX	4903-9292		H
						V
		EXISTING CONVENTIONAL STROBE - RED - WALL MOUNT	SIMPLEX	4904-9137		V

FIRE ALARM WIRE LEGEND

	CIRCUIT DESCRIPTION	CONSTRUCTION	GAUGE	CIRCUIT PROPERTIES	ACCEPTABLE CABLE TYPES: FPLR	FPLP	THHN	TFFN	OUTDOOR **	CL...
A	ADDRESSABLE NOTIFICATION	UTP SOLID	14 AWG	60pf/ft. MAX CAPACITANCE; 3 twists/ft. MINIMUM	X	X				
H	AUDIBLE CIRCUIT	2 COND. SOLID	14 AWG		X	X				
Mm	MAPNET	STP SOLID	16 AWG	60µF MAX TOTAL LINE CAPACITANCE	X	X				
Mi	IDNET	UTP SOLID	18 AWG	60µF MAX TOTAL LINE CAPACITANCE	X	X				
V	VISUAL	2 COND. SOLID	14 AWG		X	X				

CONDUIT SIZE	MAX CONDUCTOR AREA	CONDUIT SIZE	MAX CONDUCTOR AREA
1/2"	0.122 SQ. INCH*	1-1/4"	0.598 SQ INCH*
3/4"	0.213 SQ INCH*	1-1/2"	0.814 SQ INCH*
1"	0.346 SQ INCH*	2"	1.342 SQ INCH*

* 40% CONDUIT FILL PER N.E.C. STP = SHIELDED TWISTED PAIR

ITEMS SUCH AS CAPACITANCE BETWEEN CONDUCTORS AND WIRE GAUGE CAN BE CRUCIAL TO THE CIRCUIT DESIGN OF THIS SYSTEM INSTALLATION. THE INSTALLING CONTRACTOR IS RESPONSIBLE FOR SELECTING AND INSTALLING CABLE MANUFACTURER AND MODEL THAT MEETS OR EXCEEDS THE ABOVE REQUIREMENTS. RECOMMENDED CABLE MANUFACTURERS AND MODEL NUMBERS ARE AVAILABLE UPON REQUEST.

RISER NOTES:

1. RISER IS A DIAGRAMMATICAL REPRESENTATION OF THE SYSTEM ARCHITECTURE IN BUILDING CROSS SECTION. IT IS NOT INTENDED TO REPRESENT ACTUAL WIRE RUNS, PANEL CONFIGURATIONS OR PENETRATIONS. REFER TO FLOOR PLANS AND PANEL DETAILS FOR CIRCUIT ROUTING AND CONFIGURATION INFORMATION.
2. ALL WIRING SHALL COMPLY WITH APPLICABLE ELECTRICAL CODES. REFER TO "APPLICABLE CODES & STANDARDS" ON SHEET FA-001 FOR SPECIFIC CODE REFERENCES.
3. THE INFORMATION OR SYMBOLS SHOWN IN BOLD LINETYPE ARE NEW OR RELOCATED.
4. THE INFORMATION OR SYMBOLS SHOWN IN LIGHT LINETYPE ARE EXISTING.
5. ALL ITEMS THAT ARE HATCHED ARE NOT IN THIS SCOPE OF WORK.
7. NOTIFICATION WIRING WILL BE CLASS A TO THE FIRE ALARM TERMINAL CABINET IN EQUIPMENT STORAGE 1RD017 AND CLASS B TO THE FIELD DEVICES PER IFC 907.6.1.2.3.

KEYED NOTES:

1. 120VAC PRIMARY POWER SOURCE SHALL BE A MECHANICALLY PROTECTED BRANCH CIRCUIT. THE CIRCUIT DISCONNECTING MEANS SHALL HAVE A RED MARKING, AND BE IDENTIFIED AS "FIRE ALARM CIRCUIT"

FIRE ALARM SYMBOL LEGEND

QTY	SYMBOL	DESCRIPTION	BRAND	MODEL	BACKBOX	WIRE TYPE
		INITIATING DEVICES				
5N	S	ADDRESSABLE PHOTOELECTRIC SMOKE SENSOR W/ STANDARD BASE	SIMPLEX	4098-9714 HEAD 4098-9792 BASE	4" OCT, 1-1/2" D	Mi
	2 OR S	EXISTING ADDRESSABLE PHOTOELECTRIC SMOKE SENSOR W/ EXISTING STANDARD BASE	SIMPLEX	4098-9714 HEAD 4098-9792 BASE	4" OCT, 1-1/2" D	Mm Mi
5N		ADDRESSABLE STANDARD HEAT SENSOR W/ STANDARD BASE	SIMPLEX	4098-9733 HEAD 4098-9792 BASE	4" OCT, 1-1/2" D	Mm Mi
		NOTIFICATION APPLIANCES				
2N	#	ADDRESSABLE MULTI-TONE HORN/STROBE ,WALL MOUNT, RED, FIRE	SIMPLEX	49MTV-WRF	SINGLE GANG 1-1/2" D	A
5N	#	ADDRESSABLE STROBE ,WALL MOUNT, RED, CLEAR LENS, FIRE	SIMPLEX	49VO-WRF	SINGLE GANG 1-1/2" D	A
2N	#	ADDRESSABLE MULTI-CANDELA STROBE ,CEILING MOUNT, APPLIANCE ONLY, CLEAR LENS	SIMPLEX	49VO-APPLC	4" SQ. 1-1/2" D	A
		CEILING MOUNT ADAPTER PLATE	SIMPLEX	49VO-APCS		
		APPLIANCE COVER, RED, FIRE LETTERING	SIMPLEX	49VOC-CRF		
		EXISTING CONVENTIONAL CHIME/STROBE - RED - WALL MOUNT	SIMPLEX	4903-9292		H V
		EXISTING CONVENTIONAL STROBE - RED - WALL MOUNT	SIMPLEX	4904-9137		V

FIRE ALARM WIRE LEGEND

	CIRCUIT DESCRIPTION	CONSTRUCTION	GAUGE	CIRCUIT PROPERTIES	ACCEPTABLE CABLE TYPES: FPLR	FPLP	THHN	TFFN	OUTDOOR **	C.L.
A	ADDRESSABLE NOTIFICATION	UTP SOLID	14 AWG	60pf/ft. MAX CAPACITANCE; 3 twists/ft. MINIMUM	X	X				
H	AUDIBLE CIRCUIT	2 COND. SOLID	14 AWG		X	X				
Mm	MAPNET	STP SOLID	16 AWG	60µF MAX TOTAL LINE CAPACITANCE	X	X				
Mi	IDNET	UTP SOLID	18 AWG	60µF MAX TOTAL LINE CAPACITANCE	X	X				
V	VISUAL	2 COND. SOLID	14 AWG		X	X				

CONDUIT SIZE	MAX CONDUCTOR AREA	CONDUIT SIZE	MAX CONDUCTOR AREA
1/2"	0.122 SQ. INCH*	1-1/4"	0.598 SQ INCH*
3/4"	0.213 SQ INCH*	1-1/2"	0.814 SQ INCH*
1"	0.346 SQ INCH*	2"	1.342 SQ INCH*

* 40% CONDUIT FILL PER N.E.C. STP = SHIELDED TWISTED PAIR

ITEMS SUCH AS CAPACITANCE BETWEEN CONDUCTORS AND WIRE GAUGE CAN BE CRUCIAL TO THE CIRCUIT DESIGN OF THIS SYSTEM INSTALLATION. THE INSTALLING CONTRACTOR IS RESPONSIBLE FOR SELECTING AND INSTALLING CABLE MANUFACTURER AND MODEL THAT MEETS OR EXCEEDS THE ABOVE REQUIREMENTS. RECOMMENDED CABLE MANUFACTURERS AND MODEL NUMBERS ARE AVAILABLE UPON REQUEST.

RISER NOTES:

1. RISER IS A DIAGRAMMATICAL REPRESENTATION OF THE SYSTEM ARCHITECTURE IN BUILDING CROSS SECTION. IT IS NOT INTENDED TO REPRESENT ACTUAL WIRE RUNS, PANEL CONFIGURATIONS OR PENETRATIONS. REFER TO FLOOR PLANS AND PANEL DETAILS FOR CIRCUIT ROUTING AND CONFIGURATION INFORMATION.
2. ALL WIRING SHALL COMPLY WITH APPLICABLE ELECTRICAL CODES. REFER TO "APPLICABLE CODES & STANDARDS" ON SHEET FA-001 FOR SPECIFIC CODE REFERENCES.
3. THE INFORMATION OR SYMBOLS SHOWN IN BOLD LINETYPE ARE NEW OR RELOCATED.
4. THE INFORMATION OR SYMBOLS SHOWN IN LIGHT LINETYPE ARE EXISTING.
5. ALL ITEMS THAT ARE HATCHED ARE NOT IN THIS SCOPE OF WORK.
7. NOTIFICATION WIRING WILL BE CLASS A TO THE FIRE ALARM TERMINAL CABINET IN EQUIPMENT STORAGE 1RD017 AND CLASS B TO THE FIELD DEVICES PER IFC 907.6.1.2.3.

KEYED NOTES:

1. 120VAC PRIMARY POWER SOURCE SHALL BE A MECHANICALLY PROTECTED BRANCH CIRCUIT. THE CIRCUIT DISCONNECTING MEANS SHALL HAVE A RED MARKING, AND BE IDENTIFIED AS "FIRE ALARM CIRCUIT"

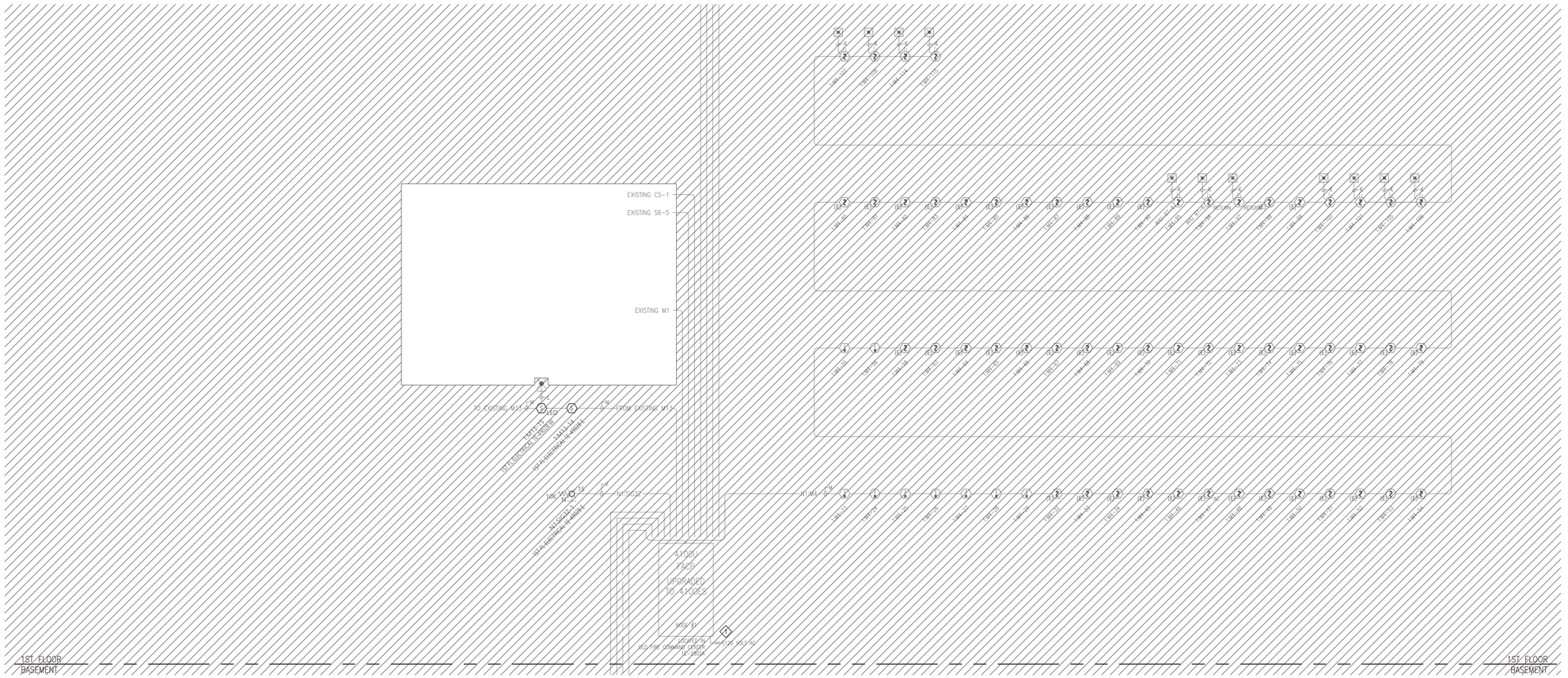

1ST FLOOR BUILDOUT PARTIAL RISER DIAGRAM

SCALE:N.T.S.

City of Aurora Building Division
Reviewed for Code Compliance
Approved as Noted: W. Polk
Date: Sep 07, 2022
2015 INTERNATIONAL CODES & 2020 NEC

Johnson Controls
DISTRICT 1-418
10065 E. EXPOSITION AVE
AURORA, CO 80017
SERVICE: 303-355-6000
PHONE: 303-350-9500
FAX: 303-355-9615

NICET CERTIFICATION INFORMATION
NANCY S. WILTSIE
NICET Fire Alarm, III
Certification #93727
Valid Through: 03/01/24
September 7, 2022

THE MEDICAL CENTER OF AURORA - SOUTH CAMPUS CT 1 AND RAD ROOM 5

THE MEDICAL CENTER OF AURORA
1501 SOUTH POTOMAC STREET
AURORA, COLORADO 80012

Revisions shown with Δ symbol

ISSUE LOG MARK	DATE:	CAD	CHK	DESCRIPTION
1	06/07/2022	CBR	NSW	CHANGE PER CUSTOMER REQUEST DATED 06/05/2022
2	09/07/2022	CBR	NSW	CHANGES PER FIRE DEPARTMENT REVIEW DATED 09/03/2022

FOR PERMIT

DRAWN BY:	CBR
CHECKED BY:	NSW
ISSUE DATE:	7/5/22
JOB #:	
PROJECT #:	419:650184053

JOHNSON CONTROLS © 2022

SYSTEM:
FIRE ALARM SYSTEM

SHEET:
1ST FLOOR BUILDOUT PARTIAL RISER DIAGRAM

FA-203

© Johnson Controls 2022. All rights reserved. Reuse, copying, modification or alteration of the drawings and other information contained herein is strictly prohibited.

FILE PATH: c:\Users\jsuchs\johnson controls\project electronics - medical center of aurora\1501 s potomac - aurora south\cad\1501 s potomac - aurora south tower - node 132-c1 & admin 5 - 2022 - 650184053-FireFA-201.dwg
LAST SAVED BY: JSUCHS
LAST PRINTED: 9/7/2022 12:49:41 PM
30" x 42" - Arch E1 Size

FIRE ALARM SYMBOL LEGEND

QTY	SYMBOL	DESCRIPTION	BRAND	MODEL	BACKBOX	WIRE TYPE
		INITIATING DEVICES				
5N (revision 1)	S	ADDRESSABLE PHOTOELECTRIC SMOKE SENSOR W/ STANDARD BASE	SIMPLEX	4098-9714 HEAD 4098-9792 BASE	4" OCT, 1-1/2" D	Mi
	? OR S	EXISTING ADDRESSABLE PHOTOELECTRIC SMOKE SENSOR W/ EXISTING STANDARD BASE	SIMPLEX	4098-9714 HEAD 4098-9792 BASE	4" OCT, 1-1/2" D	Mm Mi
5N		ADDRESSABLE STANDARD HEAT SENSOR W/ STANDARD BASE	SIMPLEX	4098-9733 HEAD 4098-9792 BASE	4" OCT, 1-1/2" D	Mm Mi
		NOTIFICATION APPLIANCES				
2N	#	ADDRESSABLE MULTI-TONE HORN/STROBE ,WALL MOUNT, RED, FIRE	SIMPLEX	49MTV-WRF	SINGLE GANG 1-1/2" D	A
5N	#	ADDRESSABLE STROBE ,WALL MOUNT, RED, CLEAR LENS, FIRE	SIMPLEX	49VO-WRF	SINGLE GANG 1-1/2" D	A
2N	#	ADDRESSABLE MULTI-CANDELA STROBE ,CEILING MOUNT, APPLIANCE ONLY, CLEAR LENS	SIMPLEX	49VO-APPLC	4" SQ. 1-1/2" D	A
		CEILING MOUNT ADAPTER PLATE	SIMPLEX	49VO-APCS		
		APPLIANCE COVER, RED, FIRE LETTERING	SIMPLEX	49VOC-CRF		
		EXISTING CONVENTIONAL CHIME/STROBE - RED - WALL MOUNT	SIMPLEX	4903-9292		H V
		EXISTING CONVENTIONAL STROBE - RED - WALL MOUNT	SIMPLEX	4904-9137		V

FIRE ALARM WIRE LEGEND

	CIRCUIT DESCRIPTION	CONSTRUCTION	GAUGE	CIRCUIT PROPERTIES	FPLR	FPLP	THHN	TFFN	OUTDOOR **	C.I.
					ACCEPTABLE CABLE TYPES					
A	ADDRESSABLE NOTIFICATION	UTP SOLID	14 AWG	60pf/ft. MAX CAPACITANCE; 3 twists/ft. MINIMUM	X	X				
H	AUDIBLE CIRCUIT	2 COND. SOLID	14 AWG		X	X				
Mm	MAPNET	STP SOLID	16 AWG	60µF MAX TOTAL LINE CAPACITANCE	X	X				
Mi	IDNET	UTP SOLID	18 AWG	60µF MAX TOTAL LINE CAPACITANCE	X	X				
V	VISUAL	2 COND. SOLID	14 AWG		X	X				

CONDUIT SIZE	MAX CONDUCTOR AREA	CONDUIT SIZE	MAX CONDUCTOR AREA
1/2"	0.122 SQ. INCH*	1-1/4"	0.598 SQ INCH*
3/4"	0.213 SQ INCH*	1-1/2"	0.814 SQ INCH*
1"	0.346 SQ INCH*	2"	1.342 SQ INCH*
* 40% CONDUIT FILL PER N.E.C.		STP = SHIELDED TWISTED PAIR	

ITEMS SUCH AS CAPACITANCE BETWEEN CONDUCTORS AND WIRE GAUGE CAN BE CRUCIAL TO THE CIRCUIT DESIGN OF THIS SYSTEM INSTALLATION. THE INSTALLING CONTRACTOR IS RESPONSIBLE FOR SELECTING AND INSTALLING CABLE MANUFACTURER AND MODEL THAT MEETS OR EXCEEDS THE ABOVE REQUIREMENTS. RECOMMENDED CABLE MANUFACTURERS AND MODEL NUMBERS ARE AVAILABLE UPON REQUEST.

RISER NOTES:

1. RISER IS A DIAGRAMMATICAL REPRESENTATION OF THE SYSTEM ARCHITECTURE IN BUILDING CROSS SECTION. IT IS NOT INTENDED TO REPRESENT ACTUAL WIRE RUNS, PANEL CONFIGURATIONS OR PENETRATIONS. REFER TO FLOOR PLANS AND PANEL DETAILS FOR CIRCUIT ROUTING AND CONFIGURATION INFORMATION.
2. ALL WIRING SHALL COMPLY WITH APPLICABLE ELECTRICAL CODES. REFER TO 'APPLICABLE CODES & STANDARDS' ON SHEET FA-001 FOR SPECIFIC CODE REFERENCES.
3. THE INFORMATION OR SYMBOLS SHOWN IN BOLD LINETYPE ARE NEW OR RELOCATED.
4. THE INFORMATION OR SYMBOLS SHOWN IN LIGHT LINETYPE ARE EXISTING.
5. ALL ITEMS THAT ARE HATCHED ARE NOT IN THIS SCOPE OF WORK.
7. NOTIFICATION WIRING WILL BE CLASS A TO THE FIRE ALARM TERMINAL CABINET IN EQUIPMENT STORAGE 1RD017 AND CLASS B TO THE FIELD DEVICES PER IFC 907.6.1.2.3.

KEYED NOTES:

1. 120VAC PRIMARY POWER SOURCE SHALL BE A MECHANICALLY PROTECTED BRANCH CIRCUIT. THE CIRCUIT DISCONNECTING MEANS SHALL HAVE A RED MARKING, AND BE IDENTIFIED AS "FIRE ALARM CIRCUIT"

1ST FLOOR BUILDOUT PARTIAL RISER DIAGRAM CONTNUED
SCALE:N.T.S.

Johnson Controls
DISTRICT - 419
14200 E. EXPOSITION AVE
AURORA, CO 80012
SERVICE: 303-355-0500
PHONE: 303-355-0500
FAX: 303-355-0615

NICET CERTIFICATION INFORMATION
NANCY S. WILTSIE
NICET Fire Alarm, III
Certification #93727
Valid Through: 03/01/24
September 7, 2022

THE MEDICAL CENTER OF AURORA - SOUTH CAMPUS CT 1 AND RAD ROOM 5

THE MEDICAL CENTER OF AURORA
1501 SOUTH POTOMAC STREET
AURORA, COLORADO 80012

ISSUE LOG: Revisions shown with △ symbol

MARK	DATE	CAD	CHK	DESCRIPTION
1	08/29/2022	CBR	NSW	CHANGES PER CUSTOMER REQUEST DATED 08/25/2022.
2	09/07/2022	CBR	NSW	CHANGES PER FIRE DEPARTMENT REVIEW DATED 09/03/2022.

FOR PERMIT

DRAWN BY:	CBR
CHECKED BY:	NSW
ISSUE DATE:	7/5/22
JOB #:	
PROJECT #:	419:650184053

JOHNSON CONTROLS © 2022

SYSTEM: FIRE ALARM SYSTEM

SHEET: 1ST FLOOR BUILDOUT PARTIAL RISER DIAGRAM CONTNUED

FA-204

City of Aurora Building Division
Reviewed for Code Compliance
Approved as Noted: W. Polk
Date: Sep 07, 2022
2015 INTERNATIONAL CODES & 2020 NEC

FILE PATH: c:\Users\jrauchc\johnson controls\project electronics - medical center of aurora\1501 s potomac - aurora south\south tower - node 1\32-ct1 & radrm5 - 2022 - 650184053\Fire\FA-201.dwg
LAST SAVED BY: JRAUCHC
LAST PRINTED: 9/7/2022 12:49:47 PM
30" x 42" - Arch E1 Size

© Johnson Controls 2022. All rights reserved. Reuse, copying, modification or alteration of the drawings and other information contained herein is strictly prohibited.

MEDICAL CENTER OF AURORA SOUTH TOWER NODE 1 FACP 4100es FACP

Module	Qty	Description		Standby Current	Total Standby	Alarm Current	Total Alarm
Panel Equipment							
4100-7150	1	MASTER CONTROLLER UPGRADE W/ 2X40 DISPLAY (4100 BA		0.1630	0.1630	0.2100	0.2100
4100-0304	1	STYLE 7 REMOTE UNIT INTERFACE		0.0850	0.0850	0.0850	0.0850
4100-5005	8	ZONE MODULE, 8 IDC, CLASS B		0.0750	0.6000	0.1950	1.5600
4100-3003	2	8 PT AUX RELAY MODULE 3 AMP		0.0250	0.0500	0.2800	0.5600
4100-0110	5	MAPNET II ADDRESSABLE MODULE	*	0.2700	1.3500	0.2900	1.4500
4100-4321	10	6 CIRCUIT CLASS B (STYLE Y)		0.0250	0.2500	0.0700	0.7000
4100-6078	1	NETWORK IF CARD, MODULAR		0.0460	0.0460	0.0460	0.0460
4100-6056	2	NETWORK MEDIA CARD WIRED		0.0550	0.1100	0.0550	0.1100
4100-5101	2	EXPANSION PWR SUPPLY (XPS) - 120VAC 60HZ		0.0500	0.1000	0.0500	0.1000
4100-6038	2	DUAL RS-232 IF CARD		0.1320	0.2640	0.1320	0.2640
4100-6005	1	MASTER CONTROLLER POWER SUPPLY		0.0000	0.0000	0.0000	0.0000
4100-3110	3	IDNet2+2 MODULE - UP TO 250 DEVICES 4 ISOLATED LOOPS	*	0.0500	0.1500	0.1000	0.3000
4100-0108	2	EXPANSION 120V 8AMP POWER SUPPLY		0.0000	0.0000	0.0000	0.0000
		Panel Totals			3.1680		5.3850
IDNet Addressable Devices (SLC)							
4090-9001	7	IDNET SUPERVISED IAM	*	Constant current draw of .8mA standby and 1mA alarm per address used. Devices requiring additional current are accounted for in the section labeled "Miscellaneous Peripheral Devices Requiring Additional System Power".			
4090-9002	1	IDNET RELAY IAM	*				
(1) **4098-9714**	**22**	**TRUEALARM PHOTO SMOKE SENSOR**					
(2) **4098-9733**	**8**	**TRUEALARM HEAT SENSOR**	*				
4098-9756	2	TRUEALARM DUCT SMOKE SENSOR W/ RELAY OUTPUT	*				
4098-9789	1	TRUEALARM SENSOR BASE W/ LED OUTPUT	*				
4098-9792	**29**	**TRUEALARM SENSOR BASE**	*				
4099-9006	10	ADDRESSABLE DOUBLE ACTION MANUAL STATION, PUSH	*				
Mapnet Addressable Devices (SLC)							
2190-9155	1	MAPNET CLASS B MONITOR ZAM	*				
2190-9161	6	MAPNET CLASS B SIGNAL ZAM	*				
2190-9163	45	MAPNET UNSUPERVISED CONTROL ZAM	*				
2190-9172	41	MAPNET SUPERVISED IAM	*				
2190-9173	3	MAPNET 2 POINT INPUT/OUTPUT ZAM	*				
2099-9795	22	MAPNET SINGLE ACTION PULL STATION	*				
4098-9714	334	TRUEALARM PHOTO SMOKE SENSOR					
4098-9733	36	TRUEALARM HEAT SENSOR	*				
4098-9756	36	TRUEALARM DUCT SMOKE SENSOR W/ RELAY OUTPUT	*				
4098-9789	329	TRUEALARM SENSOR BASE W/ LED OUTPUT	*				
4098-9792	41	TRUEALARM SENSOR BASE	*				
Miscellaneous Peripheral Devices That Require (Additional) System Power							
4098-9843	38	ENCAPSULATED RELAY PAM-SD		0.0000	0.0000	0.0150	0.5700
4098-9756	38	TRUEALARM DUCT SMOKE SENSOR W/ RELAY OUTPUT		0.0030	0.1140	0.0150	0.5700
4603-9101	11	SERIAL LCD ANNUNCIATOR		0.0650	0.7150	0.1400	1.5400
2098-9808	1	REMOTE ALARM INDICATOR		0.0010	0.0010	0.0000	0.0000
Notification Appliances			Setting				
4009-9001	2	FOUR CIRCUIT NAC EXTENDER, 120 VAC		0.0000	0.0000	0.0150	0.0300
4903-9219	10	HORN/STROBE, NON-SYNC, RED, WALL MTD	15	0.0000	0.0000	0.1330	1.3300
4903-9292	95	CH70-2415W-FR, CHIME/STROBE, NON-SYNC, RED, WALL MTD	15	0.0000	0.0000	0.0700	6.6500
(1) **4904-9137**	**116**	**15CD VISIBLE ONLY RED**	**15**	**0.0000**	**0.0000**	**0.0900**	**10.4400**
4906-9101	1	V/O MC NON-ADDRESS, RED, WALL	15	0.0000	0.0000	0.0600	0.0600
4906-9101	5	V/O MC NON-ADDRESS, RED, WALL	75	0.0000	0.0000	0.1860	0.9300
CH70-24MCW-FR	4	MULTI CD CHIME STROBE, WALL MNT, RED	15	0.0000	0.0000	0.0820	0.3280
RSS-24MCW-FR	1	MULTI CD STROBE, WALL MNT, RED	15	0.0000	0.0000	0.0600	0.0600
		Peripheral Totals			0.8300		22.5080
		RUI Totals	11		0.0385		0.0385
		Address Totals	597.5 Addresses		0.9708		0.9808
		System Totals*:		Standby	5.0073	Alarm	28.9123

* Device Address current draw included below (See Additional Current Draws):
1. 2-wire detector alarm current is included in the alarm current of the Initiating Device Circuit.

Battery Set #1 (Cabinet/Charger #1)			Standby Current	Standby Total	Alarm Current	Alarm Total
Select ALL Power Supplies on this battery set:						
PS-1				1.0930		8.9520
PS-2				1.2470		8.2500
PS-3				0.7010		8.4000
XPS-1				0.1570		0.4960
XPS-2				0.8000		1.7950
			Sub Total	3.9980		27.8930
Additional Current Draws:						
RUI Connected Peripheral Devices		11	x 0.0035	= 0.0385	x 0.0035	= 0.0385
MAPNET/IDNet Device Address Communication Current		598	x 0.001625	= 0.9708	x 0.001642	= 0.9808
			Sub Total	5.0073		28.9123
Spare addressable point capacity	20%	120	x 0.001625	= 0.1950	x 0.001642	= 0.1970
			Total	5.2022		29.1093
Standby Time =	4	Hrs	x 5.2022	= 20.8088	Standby Ah	
Alarm Time =	5	Min	0.08333 x 29.1093	= 2.4258	Alarm Ah	
				23.2346		
Additional Spare Battery Capacity =	20%		+	4.6469		
				27.8815		
Battery Discharge Factor =	20%		+	5.5763		
Minimum Battery Required	2081-9296 50AH (2x)			33.4579		
Battery Supplied	2081-9296 50AH (2x)					

* System Totals represent total system current requirements. Those currents may be distributed between multiple battery sets or power supplies as shown above.

MAPNET CHANNEL 1:M1

Address	Device Type	Point Type	Location Description	1	2	3	4	5	6	7	8		9
1:M1-1	ADRPUL	PULL	1:M1-1 FLR 1 W - EXIT BY X-RAY WAITING	X								ON	
1:M1-2	ADRPUL	PULL	1:M1-2 FLR 1W - EXIT HALL BY NUCLEAR MED		X							ON	
1:M1-3	ADRPUL	PULL	1:M1-3 FLR 1W - EXIT BY INTERVENTIONAL	X	X							ON	
1:M1-4	ADRPUL	PULL	1:M1-4 FLR 1 CENTRAL TWR EXIT BY MRI			X						ON	
1:M1-5	RPHOTO	SDUCT	1:M1-5 X-RAY ROOF - AHU-97-9 DUCT D.	X		X						ON	
1:M1-6	RPHOTO	SDUCT	1:M1-6 X-RAY ROOF - AHU-97-9 DUCT D		X	X						ON	
1:M1-7	RPHOTO	SDUCT	1:M1-7 X-RAY ROOF - AHU-97-14 DUCT D	X	X	X						ON	
1:M1-8	RPHOTO	SDUCT	1:M1-8 X-RAY ROOF - AHU-97-14 DUCT D.				X					ON	
1:M1-9	RPHOTO	SDUCT	1:M1-9 X-RAY ROOF - AHU-97-15 DUCT D.	X			X					ON	
1:M1-10	RPHOTO	SDUCT	1:M1-10 X-RAY ROOF - AHU-15 DUCT DET.		X		X					ON	
1:M1-11	GENIAM	SO	1:M1-11 FLR 1 CENTRAL TWR X-RAY HALL	X	X		X					ON	
1:M1-12	RZAM	RELAY	1:M1-12 X-RAY ROOF - AHU-97-9 DOWN			X	X					ON	
1:M1-13	RZAM	RELAY	1:M1-13 X-RAY ROOF AHU 97-14 SHUTDOWN	X		X	X					ON	
1:M1-14	RZAM	RELAY	1:M1-14 X-RAY ROOF AHU 97-15 SHUTDOWN		X	X	X					ON	
1:M1-15	PHOTO	VSMOKE	1:M1-15 FLR 1W - HALL BY X-RAY WAITING	X	X	X	X					ON	
1:M1-16	PHOTO	VSMOKE	1:M1-16 FLR 1W - X-RAY - PET SCAN					X				ON	
1:M1-17	PHOTO	VSMOKE	1:M1-17 FLR 1W - X-RAY - PET SCAN	X				X				ON	
1:M1-18	PHOTO	VSMOKE	1:M1-18 FLR 1W - HALL BY X-RAY WAITING		X			X				ON	
1:M1-19	PHOTO	VSMOKE	1:M1-19 FLR 1W - HALL BY X-RAY WAITING	X	X			X				ON	
1:M1-20	PHOTO	VSMOKE	1:M1-20 FLR 1W - X-RAY WAITNG RM			X		X				ON	
1:M1-21	PHOTO	VSMOKE	1:M1-21 FLR 1W - HALL BY X-RAY WAITING	X		X		X				ON	
1:M1-22	PHOTO	VSMOKE	1:M1-22 FLR 1W - HALL BY X-RAY WAITING		X	X		X				ON	
1:M1-23	PHOTO	VSMOKE	1:M1-23 FLR 1W - BY PATHOLOGY STAIRS	X	X	X		X				ON	
1:M1-24	PHOTO	VSMOKE	1:M1-24 FLR 1W - HALL BY PATHOLOGY				X	X				ON	
1:M1-25	PHOTO	VSMOKE	1:M1-25 FLR 1W - HALL BY PATHOLOGY	X			X	X				ON	
1:M1-26			SPARE		X		X	X				ON	
1:M1-27			SPARE	X	X		X	X				ON	
1:M1-28			SPARE			X	X	X				ON	
1:M1-29			SPARE	X		X	X	X				ON	
1:M1-30			SPARE		X	X	X	X				ON	
1:M1-31			SPARE	X	X	X	X	X				ON	
1:M1-32			SPARE						X			ON	
1:M1-33			SPARE	X					X			ON	
1:M1-34			SPARE		X				X			ON	
1:M1-35			SPARE	X	X				X			ON	
1:M1-36	PHOTO	VSMOKE	1:M1-36 FLR 1W - PATHOLOGY LAB			X			X			ON	
1:M1-37	PHOTO	VSMOKE	1:M1-37 FLR 1W - ULTRASOUND SUITE	X		X			X			ON	
1:M1-38	PHOTO	VSMOKE	1:M1-38 FLR 1W - ULTRASOUND SUITE		X	X			X			ON	
1:M1-39	PHOTO	VSMOKE	1:M1-39 FLR 1W - HALL BY X-RAY WAITING	X	X	X			X			ON	
1:M1-40	PHOTO	VSMOKE	1:M1-40 FLR 1W - HALL BY X-RAY OFFICES				X		X			ON	
1:M1-41	PHOTO	VSMOKE	1:M1-41 FLR 1W - X-RAY WAITNG RM	X			X		X			ON	
1:M1-42	PHOTO	VSMOKE	1:M1-42 FLR 1W - X-RAY OFFICE SUITE		X		X		X			ON	
1:M1-43	PHOTO	VSMOKE	1:M1-43 FLR 1W - X-RAY OFFICE SUITE	X	X		X		X			ON	
1:M1-44	PHOTO	VSMOKE	1:M1-44 FLR 1W - X-RAY OFFICE SUITE			X	X		X			ON	
1:M1-45	PHOTO	VSMOKE	1:M1-45 FLR 1W - HALL BY X-RAY OFFICES	X		X	X		X			ON	
1:M1-46	PHOTO	VSMOKE	1:M1-46 FLR 1W - HALL BY X-RAY OFFICES		X	X	X		X			ON	
1:M1-47	PHOTO	VSMOKE	1:M1-47 FLR 1W - HALL BY NUCLEAR MED	X	X	X	X		X			ON	
1:M1-48	PHOTO	VSMOKE	1:M1-48 FLR 1W - HALL BY NUCLEAR MED					X	X			ON	
1:M1-49	PHOTO	VSMOKE	1:M1-49 FLR 1W - HALL BY NUCLEAR MED	X				X	X			ON	
1:M1-50	PHOTO	VSMOKE	1:M1-50 FLR 1W - NUCLEAR MEDICINE		X			X	X			ON	
1:M1-51	PHOTO	VSMOKE	1:M1-51 FLR 1W - NUCLEAR MEDICINE	X	X			X	X			ON	
1:M1-52	PHOTO	VSMOKE	1:M1-52 FLR 1W - NUCLEAR MED HOT LAB			X		X	X			ON	
1:M1-53	PHOTO	VSMOKE	1:M1-53 FLR 1W - HALL BY NUCLEAR MED	X		X		X	X			ON	
1:M1-54	PHOTO	VSMOKE	1:M1-54 FLR 1W - EXIT HALL BY X-RAY 4		X	X		X	X			ON	
1:M1-55	PHOTO	VSMOKE	1:M1-55 FLR 1W - EXIT HALL BY X-RAY 3	X	X	X		X	X			ON	
1:M1-56	PHOTO	VSMOKE	1:M1-56 FLR 1W - INTER-HALL BY X-RAY 3				X	X	X			ON	
1:M1-57	PHOTO	VSMOKE	1:M1-57 FLR 1W - INTER-HALL BY X-RAY 3	X			X	X	X			ON	
1:M1-58	PHOTO	VSMOKE	1:M1-58 FLR 1W - INTER-HALL BY X-RAY 3		X		X	X	X			ON	
1:M1-59	PHOTO	VSMOKE	1:M1-59 FLR 1W - INTER-HALL BY X-RAY 4	X	X		X	X	X			ON	
1:M1-60	PHOTO	VSMOKE	1:M1-60 FLR 1W - HALL BY CAT SCAN			X	X	X	X			ON	
1:M1-61	PHOTO	VSMOKE	1:M1-61 FLR 1W - HALL BY CAT SCAN	X		X	X	X	X			ON	
1:M1-62	PHOTO	VSMOKE	1:M1-62 FLR 1W - HALL BY CAT SCAN		X	X	X	X	X			ON	
(2) **1:M1-63**	**HEAT**	**HEAT**	**1:M1-63 FLR 1W - CAT SCAN SUITE INTERIM**	X	X	X	X	X	X			ON	
1:M1-64	PHOTO	VSMOKE	1:M1-64 FLR 1W - HALL BY CAT SCAN							X		ON	
1:M1-65			SPARE	X						X		ON	
1:M1-66			SPARE		X					X		ON	
1:M1-67			SPARE	X	X					X		ON	
1:M1-68			SPARE			X				X		ON	
1:M1-69	PHOTO	VSMOKE	1:M1-69 FLR 1W - HALL BY X-RAY LOUNGE	X		X				X		ON	
1:M1-70	PHOTO	VSMOKE	1:M1-70 FLR 1W - HALL BY INTERVENTIONAL		X	X				X		ON	
1:M1-71	ADRPUL	PULL	1:M1-71 FL 1 CENTRL TWR MRI NRS STATION	X	X	X				X		ON	
1:M1-72	RZAM	RELAY	1:M1-72 FL1W IDF RM M - SE HALL ACCTL ML				X			X		ON	
1:M1-73	RZAM	RELAY	1:M1-73 1ST FL ROLL UP DOOR	X			X			X		ON	
1:M1-74	PHOTO	VSMOKE	1:M1-74 FLR 1W - HALL BY INTERVENTIONAL		X		X			X		ON	
1:M1-75	PHOTO	VSMOKE	1:M1-75 FLR 1W - INTERVENTIONAL X-RAY	X	X		X			X		ON	
1:M1-76	PHOTO	VSMOKE	1:M1-76 FLR 1W - HALL BY INTERVENTIONAL			X	X			X		ON	
1:M1-77	PHOTO	VSMOKE	1:M1-77 FLR 1W - HALL BY INTERVENTIONAL	X		X	X			X		ON	
1:M1-78			SPARE		X	X	X			X		ON	
1:M1-79			SPARE	X	X	X	X			X		ON	
1:M1-80	PHOTO	VSMOKE	1:M1-80 FLR 1W - INTERVENTIONAL X-RAY					X		X		ON	
1:M1-81	PHOTO	VSMOKE	1:M1-81 FLR 1W - INTERVENTIONAL X-RAY	X				X		X		ON	
1:M1-82	PHOTO	VSMOKE	1:M1-82 FLR 1W - INTERVENTIONAL X-RAY		X			X		X		ON	
1:M1-83	PHOTO	VSMOKE	1:M1-83 FLR 1W - HALL BY MRI EQUIP. RM	X	X			X		X		ON	
1:M1-84	PHOTO	VSMOKE	1:M1-84 FLR 1W - HALL BY MRI EQUIP. RM			X		X		X		ON	
(2) **1:M1-85**	**HEAT**	**HEAT**	**1:M1-85 FLR 1W - CAT 01 5303A INTERIM**	X		X		X		X		ON	
1:M1-86	**HEAT**	**HEAT**	**1:M1-86 FLR 1W - CAT 02 5302A INTERIM**		X	X		X		X		ON	
1:M1-87	**HEAT**	**HEAT**	**1:M1-87 FLR 1W - NUC MED RM 01 INTERIM**	X	X	X		X		X		ON	
1:M1-88			SPARE				X	X		X		ON	
1:M1-89	PHOTO	VSMOKE	1:M1-89 FLR 1W - HALL BY MRI	X			X	X		X		ON	
1:M1-90	PHOTO	VSMOKE	1:M1-90 FLR 1W - HALL BY MRI		X		X	X		X		ON	
1:M1-91	PHOTO	VSMOKE	1:M1-91 FLR 1W - X-RAY - PET SCAN	X	X		X	X		X		ON	
1:M1-92			SPARE			X	X	X		X		ON	
1:M1-93	GENIAM	SO	1:M1-93 1ST FL PHARMACY SUPPLY TAMPER	X		X	X	X		X		ON	
1:M1-94	GENIAM	WATER	1:M1-94 FLR 1W - BLOOD BANK FLOW		X	X	X	X		X		ON	
1:M1-95	MBZAM	HEAT	1:M1-95 FLR 1W - MRI SCANNER ROOM	X	X	X	X	X		X		ON	
1:M1-96	PHOTO	VSMOKE	1:M1-96 FLR 1W - MRI CONTROL RM						X	X		ON	
1:M1-97	PHOTO	VSMOKE	1:M1-97 FLR 1W - MRI SUITE	X					X	X		ON	
1:M1-98	PHOTO	VSMOKE	1:M1-98 FLR 1W - MRI EQUIPMENT RM		X				X	X		ON	
1:M1-99	PHOTO	VSMOKE	1:M1-99 FLR 1W - INTERVENTIONAL X-RAY	X	X				X	X		ON	
1:M1-100	PHOTO	VSMOKE	1:M1-100 FLR 1W - INTERVENTIONAL BAY 2			X			X	X		ON	
1:M1-101	PHOTO	VSMOKE	1:M1-101 FLR 1W - INTERVENTIONAL BAY 1	X		X			X	X		ON	
1:M1-102	PHOTO	VSMOKE	1:M1-102 FLR 1W - INTERVENTIONAL N.STAT.		X	X			X	X		ON	
1:M1-103			SPARE	X	X	X			X	X		ON	
1:M1-104			SPARE				X		X	X		ON	
1:M1-105			SPARE	X			X		X	X		ON	
1:M1-106	PHOTO	VSMOKE	1:M1-106 FLR 1W - ELECTRIC RM BY LAB		X		X		X	X		ON	
1:M1-107	PHOTO	VSMOKE	1:M1-107 FLR 1 W - OR STORAGE	X	X		X		X	X		ON	
1:M1-108			SPARE			X	X		X	X		ON	
1:M1-109			SPARE	X		X	X		X	X		ON	
1:M1-110			SPARE		X	X	X		X	X		ON	
1:M1-111			SPARE	X	X	X	X		X	X		ON	
1:M1-112			SPARE					X	X	X		ON	
1:M1-113			SPARE	X				X	X	X		ON	
1:M1-114			SPARE		X			X	X	X		ON	
1:M1-115	PHOTO	VSMOKE	1:M1-115 FLR 1 RADI. 03 CHANGING AREA	X	X			X	X	X		ON	
1:M1-116			SPARE			X		X	X	X		ON	
1:M1-117			SPARE	X		X		X	X	X		ON	
1:M1-118			SPARE		X	X		X	X	X		ON	
1:M1-119			SPARE	X	X	X		X	X	X		ON	
1:M1-120			SPARE				X	X	X	X		ON	
1:M1-121			SPARE	X			X	X	X	X		ON	
1:M1-122			SPARE		X		X	X	X	X		ON	
1:M1-123			SPARE	X	X		X	X	X	X		ON	
1:M1-124			SPARE			X	X	X	X	X		ON	
1:M1-125			SPARE	X		X	X	X	X	X		ON	
1:M1-126			SPARE		X	X	X	X	X	X		ON	
1:M1-127			SPARE	X	X	X	X	X	X	X		ON	

NOTE: THE LABELS SHOWN ABOVE WILL BE USED FOR PROGRAMMING PURPOSES.
THE LABELS ARE BASED UPON INFORMATION SHOWN ON THE ARCHITECTURAL DRAWINGS.
ANY CHANGES TO THESE LABELS MUST BE NOTED ON THE SUBMITTAL REVIEW, PRIOR TO PROGRAMMING.
POINTS SHOWN IN ITALIC TEXT REFER TO EXISTING DEVICES.

MEDICAL CENTER OF AURORA SOUTH TOWER NODE 1 FACP 4100es FACP VOLTAGE DROPS

WIRE RESISTANCE BASED ON TABLE 8 FROM NATIONAL ELECTRICAL CODE (UNCOATED SOLID COPPER WIRE) @ 50 Celsius

												PID	4903-9219	4903-9292	4904-9137	CH70-24MCW-FR	RSS-24MCW-FR	4906-9101	4906-9101	4009-9001				
												Setting	15cd	15cd	15cd	15cd	15cd	15cd	75cd					
												Device Type	A/V	C/V	V/O	MC A/V	MC V/O	MC V/O	MC V/O					
												Supv. Current	0.0000	0.0000	0.0000	0.0000	0.0000	0.0000	0.0000	0.0000				
												Alarm Current	0.1330	0.0700	0.0900	0.0820	0.0600	0.0600	0.1860	0.0150				
NOTIFICATION CIRCUIT DESCRIPTION	**Power Supply**	**Panel Circuit**	**Plan Ckt.**	**Dist. (D) Feet**	**Wire Gauge**	**Wire Res. / Ft. (R)**	**Total Alarm (A)**	**V. Drop (A*2D*R)**	**Volt @ End**	**% Volt Drop**	**Min Device Voltage**	**Max Distance**									**Circuit Capacity (Amps)**	**Minimum Voltage @ NAC Output Terminals**	**Spare Circuit / Branch Capacity**	**Device Quantity Per Circuit/ Branch**
1ST FLOOR EAST CHIMES/STROBES N1:SIG3	PS-1	SIG3	1:SIG3	500	14ga	0.0028	0.450	1.270	18.230	6.51%	16vdc	1378 Ft.			5						3.A	19.5	63.7%	5
RADIOLOGY/SURGERY HALLS N1:SIG4	PS-1	SIG4	1:SIG4	500	14ga	0.0028	0.450	1.270	18.230	6.51%	16vdc	1378 Ft.			5						3.A	19.5	63.7%	5
2ND FLOOR CHIMES/STROBES N1:SIG5	PS-1	SIG5	1:SIG5	600	14ga	0.0028	0.450	1.524	17.976	7.82%	16vdc	1378 Ft.			5						3.A	19.5	56.5%	5
3RD FLOOR CHIMES/STROBES N1:SIG6	PS-1	SIG6	1:SIG6	700	14ga	0.0028	0.450	1.778	17.722	9.12%	16vdc	1378 Ft.			5						3.A	19.5	49.2%	5
4TH FLOOR CHIMES/STROBES N1:SIG7	PS-1	SIG7	1:SIG7	800	14ga	0.0028	0.450	2.032	17.468	10.42%	16vdc	1378 Ft.			5						3.A	19.5	41.9%	5
5TH FLOOR CHIMES/STROBES N1:SIG8	PS-1	SIG8	1:SIG8	900	14ga	0.0028	0.450	2.286	17.214	11.72%	16vdc	1378 Ft.			5						3.A	19.5	34.7%	5
SURGERY CHIMES/STROBES N1:SIG9	PS-1	SIG9	1:SIG9	500	14ga	0.0028	0.450	1.270	18.230	6.51%	16vdc	1378 Ft.			5						3.A	19.5	63.7%	5
LAB HALL CHIMES/STROBES N1:SIG10	PS-1	SIG10	1:SIG10	500	14ga	0.0028	0.450	1.270	18.230	6.51%	16vdc	1378 Ft.			5						3.A	19.5	63.7%	5
CENT SPLY/MATERIALS MGMT N1:SIG11	PS-1	SIG11	1:SIG11	500	14ga	0.0028	0.450	1.270	18.230	6.51%	16vdc	1378 Ft.			5						3.A	19.5	63.7%	5
EMERGENCY ROOM STROBES N1:SIG12	PS-1	SIG12	1:SIG12	500	14ga	0.0028	0.450	1.270	18.230	6.51%	16vdc	1378 Ft.			5						3.A	19.5	63.7%	5
EMERGENCY RM HALL STROBES N1:SIG13	PS-1	SIG13	1:SIG13	500	14ga	0.0028	0.450	1.270	18.230	6.51%	16vdc	1378 Ft.			5						3.A	19.5	63.7%	5
1ST FLOOR CENTRAL STROBES N1:SIG14	PS-1	SIG14	1:SIG14	500	14ga	0.0028	0.450	1.270	18.230	6.51%	16vdc	1378 Ft.			5						3.A	19.5	63.7%	5
N1:SIG15 CENT SPLY/MATERIAL CHIME	PS-1	SIG15	1:SIG15	500	14ga	0.0028	0.350	0.988	18.512	5.07%	16vdc	1772 Ft.		5							3.A	19.5	71.8%	5
N1:SIG16 EMERGENCY ROOM CHIMES	PS-1	SIG16	1:SIG16	500	14ga	0.0028	0.350	0.988	18.512	5.07%	16vdc	1772 Ft.		5							3.A	19.5	71.8%	5
N1:SIG17 EMERGENCY RM HALL CHIMES	PS-1	SIG17	1:SIG17	500	14ga	0.0028	0.350	0.988	18.512	5.07%	16vdc	1772 Ft.		5							3.A	19.5	71.8%	5
N1:SIG18 1ST FLOOR CENTRAL CHIMES	PS-2	SIG18	1:SIG18	500	14ga	0.0028	0.350	0.988	18.512	5.07%	16vdc	1772 Ft.		5							3.A	19.5	71.8%	5
N1:SIG19 CHIMES C6-1	PS-2	SIG19	1:SIG19	1000	14ga	0.0028	0.350	1.975	17.525	10.13%	16vdc	1772 Ft.		5							3.A	19.5	43.6%	5
(1) **N1:SIG20 CHIMES C5-1, S6-5, S6-6**	**PS-2**	**SIG20**	**1:SIG20**	**827**	**14ga**	**0.0028**	**0.570**	**2.661**	**16.839**	**13.64%**	**16vdc**	**1088 Ft.**		3	**4**						**3.A**	**19.5**	**24.0%**	**7**
N1:SIG21 STROBES S6-1	PS-2	SIG21	1:SIG21	1000	14ga	0.0028	0.450	2.540	16.960	13.03%	16vdc	1378 Ft.			5						3.A	19.5	27.4%	5
N1:SIG22 STROBES S6-2	PS-2	SIG22	1:SIG22	100	14ga	0.0028	0.450	0.254	19.246	1.30%	16vdc	1378 Ft.			5						3.A	19.5	85.0%	5
N1:SIG23 CHIMES C3,4-1	PS-2	SIG23	1:SIG23	700	14ga	0.0028	0.372	1.470	18.030	7.54%	16vdc	1667 Ft.							2		3.A	19.5	58.0%	2
N1:SIG24 STROBES S3-1	PS-2	SIG24	1:SIG24	700	14ga	0.0028	0.360	1.422	18.078	7.29%	16vdc	1723 Ft.			4						3.A	19.5	59.4%	4
N1:SIG25 STROBES S3-2	PS-2	SIG25	1:SIG25	700	14ga	0.0028	0.760	3.003	16.497	15.40%	16vdc	816 Ft.		7	3						3.A	19.5	14.2%	10
N1:SIG26 CHIME C2-1	PS-2	SIG26	1:SIG26	600	14ga	0.0028	0.700	2.371	17.129	12.16%	16vdc	886 Ft.		10							3.A	19.5	32.3%	10
N1:SIG27 SPARE	PS-2	SIG27	1:SIG27		14ga	0.0028	0.000	0.000	19.500	0.00%	16vdc	0 Ft.									3.A	19.5	100.0%	0
N1:SIG28 STROBES SP6-2	PS-2	SIG28	1:SIG28	600	14ga	0.0028	0.450	1.524	17.976	7.82%	16vdc	1378 Ft.			5						3.A	19.5	56.5%	5
N1:SIG29 4009 SP6-2,S2-4,1ST CENT ELEV#6	PS-2	SIG29	1:SIG29	350	14ga	0.0028	0.015	0.030	19.470	0.15%	16vdc	41340 Ft.								1	3.A	19.5	99.2%	1
N1:SIG30 STROBES 4009A SOUTH PHARMACY	PS-2	SIG30	1:SIG30	350	14ga	0.0028	0.015	0.030	19.470	0.15%	16vdc	41340 Ft.								1	3.A	19.5	99.2%	1
N1:SIG31 SPARE S5-2	PS-2	SIG31	1:SIG31		14ga	0.0028	0.000	0.000	19.500	0.00%	16vdc	0 Ft.									3.A	19.5	100.0%	0
N1:SIG32 ELECTRICAL 1E-4902B STROBE	PS-2	SIG32	1:SIG32	350	14ga	0.0028	0.060	0.119	19.381	0.61%	16vdc	10335 Ft.						1			3.A	19.5	96.6%	1
N1:SIG33 STROBE S6-3	PS-2	SIG33	1:SIG33	1000	14ga	0.0028	0.180	1.016	18.484	5.21%	16vdc	3445 Ft.			2						3.A	19.5	71.0%	2
N1:SIG34 STROBE S6-4	PS-2	SIG34	1:SIG34	1000	14ga	0.0028	0.090	0.508	18.992	2.61%	16vdc	6890 Ft.			1						3.A	19.5	85.5%	1
N1:SIG35 STROBE S2-3	PS-2	SIG35	1:SIG35	600	14ga	0.0028	0.910	3.082	16.418	15.80%	16vdc	681 Ft.		4	7						3.A	19.5	11.9%	11
N1:SIG36 STROBE S2-1	PS-3	SIG36	1:SIG36	600	14ga	0.0028	0.690	2.337	17.163	11.98%	16vdc	899 Ft.		6	3						3.A	19.5	33.2%	9
N1:SIG37 STROBE S2-2	PS-3	SIG37	1:SIG37	533	14ga	0.0028	1.070	3.219	16.281	16.51%	16vdc	580 Ft.		5	8						3.A	19.5	8.0%	13
N1:SIG38 SPARE	PS-3	SIG38	1:SIG38		14ga	0.0028	0.000	0.000	19.500	0.00%	16vdc	0 Ft.									3.A	19.5	100.0%	0
N1:SIG39 STROBE OUTSIDE SIAMESE	PS-3	SIG39	1:SIG39	1000	14ga	0.0028	0.060	0.339	19.161	1.74%	16vdc	10335 Ft.					1				3.A	19.5	90.3%	1
N1:SIG40 HORN OUTSIDE SIAMESE	PS-3	SIG40	1:SIG40	1000	14ga	0.0028	0.254	1.434	18.066	7.35%	16vdc	2441 Ft.			1	2					3.A	19.5	59.0%	3
N1:SIG41 SPARE	PS-3	SIG41	1:SIG41		14ga	0.0028	0.000	0.000	19.500	0.00%	16vdc	0 Ft.									3.A	19.5	100.0%	0
N1:SIG42 CHIME 1ST FLOOR CENTRAL	PS-3	SIG42	1:SIG42	500	14ga	0.0028	0.360	1.016	18.484	5.21%	16vdc	1723 Ft.			4						3.A	19.5	71.0%	4
N1:SIG43 BASEMENT EVS DEPT STROBE CKT	PS-3	SIG43	1:SIG43	600	14ga	0.0028	0.090	0.305	19.195	1.56%	16vdc	6890 Ft.			1						3.A	19.5	91.3%	1
N1:SIG44 SPARE	PS-3	SIG44	1:SIG44		14ga	0.0028	0.000	0.000	19.500	0.00%	16vdc	0 Ft.									3.A	19.5	100.0%	0
N1:SIG45 BASEMENT	PS-3	SIG45	1:SIG45	600	14ga	0.0028	0.712	2.411	17.089	12.37%	16vdc	871 Ft.		9		1					3.A	19.5	31.1%	10
N1:SIG46 STROBES MATERIAL MANAGEMENT	PS-3	SIG46	1:SIG46	600	14ga	0.0028	0.372	1.260	18.240	6.46%	16vdc	1667 Ft.							2		3.A	19.5	64.0%	2
N1:SIG47 BASEMENT CORRIDOR	PS-3	SIG47	1:SIG47	488	14ga	0.0028	0.982	2.705	16.795	13.87%	16vdc	631 Ft.		9	3	1					3.A	19.5	22.7%	13
N1:SIG48 SPARE	PS-3	SIG48	1:SIG48		14ga	0.0028	0.000	0.000	19.500	0.00%	16vdc	0 Ft.									3.A	19.5	100.0%	0
N1:SIG49 S9-1 BLOOD W.& SURG DOC OFFICES	PS-3	SIG49	1:SIG49	900	14ga	0.0028	0.266	1.351	18.149	6.93%	16vdc	2331 Ft.	2								3.A	19.5	61.4%	2
N1:SIG50 S9-2 BLOOD LAB EAST	PS-3	SIG50	1:SIG50	900	14ga	0.0028	0.266	1.351	18.149	6.93%	16vdc	2331 Ft.	2								3.A	19.5	61.4%	2
N1:SIG51 ADMITING SOUTH	PS-3	SIG51	1:SIG51	1000	14ga	0.0028	0.266	1.501	17.999	7.70%	16vdc	2331 Ft.	2								3.A	19.5	57.1%	2
N1:SIG52 ADMITING NORTH	PS-3	SIG52	1:SIG52	1000	14ga	0.0028	0.133	0.751	18.749	3.85%	16vdc	4662 Ft.	1								3.A	19.5	78.5%	1
N1:SIG53 ADMITING CHIME	PS-3	SIG53	1:SIG53	1000	14ga	0.0028	0.133	0.751	18.749	3.85%	16vdc	4662 Ft.	1								3.A	19.5	78.5%	1
N1:SIG54 SPARE	PS-3	SIG54	1:SIG54		14ga	0.0028	0.000	0.000	19.500	0.00%	16vdc	0 Ft.									3.A	19.5	100.0%	0
N1:SIG55 C7-9-1 BLOOD LAB SURGERY PREP	PS-3	SIG55	1:SIG55	1000	14ga	0.0028	0.133	0.751	18.749	3.85%	16vdc	4662 Ft.	1								3.A	19.5	78.5%	1
N1:SIG56 SPARE	PS-3	SIG56	1:SIG56		14ga	0.0028	0.000	0.000	19.500	0.00%	16vdc	0 Ft.									3.A	19.5	100.0%	0
N1:SIG57 S1,3 KITCHEN AND SLEEP ROOMS	PS-3	SIG57	1:SIG57	900	14ga	0.0028	0.133	0.676	18.824	3.46%	16vdc	4662 Ft.	1								3.A	19.5	80.7%	1
N1:SIG58 S1,4 GIFT SHOP & ELEVATOR AREA	PS-3	SIG58	1:SIG58	900	14ga	0.0028	0.350	1.778	17.722	9.12%	16vdc	1772 Ft.		5							3.A	19.5	49.2%	5
N1:SIG59 S8,3 SURGERY PREP AND HOLDING	PS-3	SIG59	1:SIG59	900	14ga	0.0028	0.350	1.778	17.722	9.12%	16vdc	1772 Ft.		5							3.A	19.5	49.2%	5
N1:SIG60 S7,1 SURGERY PREP	PS-3	SIG60	1:SIG60	900	14ga	0.0028	0.350	1.778	17.722	9.12%	16vdc	1772 Ft.		5							3.A	19.5	49.2%	5
N1:SIG61 S7,2 SURGERY PREP	PS-3	SIG61	1:SIG61	900	14ga	0.0028	0.140	0.711	18.789	3.65%	16vdc	4429 Ft.		2							3.A	19.5	79.7%	2
N1:SIG62 SPARE	PS-3	SIG62	1:SIG62		14ga	0.0028	0.000	0.000	19.500	0.00%	16vdc	0 Ft.									3.A	19.5	100.0%	0
N1:SIG101 1ST FLR ATS AREA STROBE 67-1	XPS-1	SIG63	1:SIG63	1000	14ga	0.0028	0.186	1.050	18.450	5.38%	16vdc	3334 Ft.							1		3.A	19.5	70.0%	1
N1:SIG102 SPARE	XPS-1	SIG64	1:SIG64		14ga	0.0028	0.000	0.000	19.500	0.00%	16vdc	0 Ft.									3.A	19.5	100.0%	0
N1:SIG103 SPARE	XPS-1	SIG65	1:SIG65		14ga	0.0028	0.000	0.000	19.500	0.00%	16vdc	0 Ft.									3.A	19.5	100.0%	0
N1:SIG107 SPARE	XPS-2	SIG66	1:SIG66		14ga	0.0028	0.000	0.000	19.500	0.00%	16vdc	0 Ft.									3.A	19.5	100.0%	0
N1:SIG108 SPARE	XPS-2	SIG67	1:SIG67		14ga	0.0028	0.000	0.000	19.500	0.00%	16vdc	0 Ft.									3.A	19.5	100.0%	0
N1:SIG109 SPARE	XPS-2	SIG68	1:SIG68		14ga	0.0028	0.000	0.000	19.500	0.00%	16vdc	0 Ft.									3.A	19.5	100.0%	0

NOTE:
LUMP SUM METHOD WAS USED TO CALCULATE ALLOWABLE VOLTAGE DROP. THIS METHOD ALLOWS FOR A SMALL MARGIN OF SAFETY, TAKING INTO CONSIDERATION THAT THE ACTUAL INSTALLED CIRCUIT ROUTING MAY DIFFER FROM WHAT IS SHOWN ON THE SHOP DRAWINGS. IF THE ACTUAL CIRCUIT LENGTH IS GOING TO EXCEED THE MAXIMUM ALLOWABLE CIRCUIT LENGTH, CONTACT YOUR LOCAL JOHNSON CONTROLS DISTRICT OFFICE.

GENERAL NOTES:

1. THE INFORMATION OR SYMBOLS SHOWN IN BOLD LINETYPE ARE NEW OR RELOCATED.
2. THE INFORMATION OR SYMBOLS SHOWN IN LIGHT LINETYPE ARE EXISTING TO REMAIN.

KEYNOTES:

1. DEVICE REMOVED FOR CONSTRUCTION.
2. DEVICE IS INTERIM FOR CONSTRUCTION. TO BE REPLACED OR REMOVED DURING BUILDOUT.
3. DEVICE WAS INTERIM FOR CONSTRUCTION AND IS NOW REMOVED.
4. EXISTING DEVICE REINSTALLED. RE-USE EXISTING HEAD, BASE, ADDRESS, LOCATION, AND WIRING.

City of Aurora Building Division
Reviewed for Code Compliance
Approved as Noted: W. Polk
Date: Sep 07, 2022
2015 INTERNATIONAL CODES & 2020 NEC

Johnson Controls
DISTRICT - 419
14200 E. EXPOSITION AVE
AURORA, CO 80012
SERVICE: 303-355-0500
PHONE: 303-355-0500
FAX: 303-355-0615

NICET CERTIFICATION INFORMATION
NANCY S. WILTSIE
NICET Fire Alarm, III
Certification #93727
Valid Through: 03/01/24
September 7, 2022

THE MEDICAL CENTER OF AURORA - SOUTH CAMPUS CT 1 AND RAD ROOM 5

THE MEDICAL CENTER OF AURORA
1501 SOUTH POTOMAC STREET
AURORA, COLORADO 80012

ISSUE LOG: Revisions shown with △ symbol

MARK	DATE	CAD	CHK	DESCRIPTION
1	08/29/2022	CBR	NSW	CHANGES PER CUSTOMER REQUEST DATED 08/25/2022.
2	09/07/2022	CBR	NSW	CHANGES PER FIRE DEPARTMENT REVIEW DATED 09/03/2022.

FOR PERMIT

DRAWN BY:	CBR
CHECKED BY:	NSW
ISSUE DATE:	7/5/22
JOB #:	
PROJECT #:	419:650184053

JOHNSON CONTROLS © 2022

SYSTEM: **FIRE ALARM SYSTEM**

SHEET: **NODE-1 FIRE ALARM CONTROL PANEL INTERIM CALCS & SCHEDULES**

FA-601

FILE PATH: c:\Users\jrauchc\johnson controls\project electronics - medical center of aurora\1501 s potomac - aurora south\south tower - node 1\32-ct1 & radrm5 - 2022 - 650184053\Fire\FA-601.dwg
LAST SAVED BY: JRAUCHC
LAST PRINTED: 9/7/2022 12:49:52 PM
30" x 42" - Arch E1 Size

© Johnson Controls 2022. All rights reserved. Reuse, copying, modification or alteration of the drawings and other information contained herein is strictly prohibited.

MEDICAL CENTER OF AURORA SOUTH TOWER TRANSPONDER 4 4100es XPDR

Module	Qty	Description	Standby Current	Total Standby	Alarm Current	Total Alarm
Panel Equipment						
4100-9609	1	BASIC TRANSPONDER	0.0870	0.0870	0.0870	0.0870
4100-0534	1	POWER DISTRIBUTION MODULE 120V	0.0000	0.0000	0.0000	0.0000
4100-0636	1	BOX TO BOX HARNESS KIT	0.0000	0.0000	0.0000	0.0000
4100-2300	1	EXPANSION BAY (PHASE 10 ONLY)	0.0000	0.0000	0.0000	0.0000
4100-5311	1	ENHANCED POWER SUPPLY, 3 CHANNELS, IDNet, 120V	0.2250	0.2250	0.4900	0.4900
4009-9601	2	IDNAC REPEATER 120V PLATINUM UL/ULC	0.0700	0.1400	0.0980	0.1920
		Panel Totals		**0.4520**		**0.7690**
IDNet Addressable Devices (SLC)						
4090-9001	3	IDNET SUPERVISED I/M	"			
4090-9003	34	IDNET RELAY I/M	"			
4098-9714	**89**	**TRUEALARM PHOTO SMOKE SENSOR**	"			
4098-9733	**10**	**TRUEALARM HEAT SENSOR**	*			
4098-9755	2	TRUEALARM DUCT SMOKE SENSOR W/O RELAY OUTPUT	"			
4098-9756	11	TRUEALARM DUCT SMOKE SENSOR W/ RELAY OUTPUT	"			
4098-9792	99	TRUEALARM SENSOR BASE	"			
4099-9004	4	ADDRESSABLE SINGLE ACTION MANUAL STATION	"			
Miscellaneous Peripheral Devices That Require (Additional) System Power						
4098-9843	11	ENCAPSULATED RELAY PAM-SD	0.0000	0.0000	0.0150	0.1650
4098-9756	11	TRUEALARM DUCT SMOKE SENSOR W/ RELAY OUTPUT	0.0030	0.0330	0.0150	0.1650
4603-9101	4	SERIAL LCD ANNUNCIATOR	0.0650	0.2600	0.1400	0.5600
2088-9021	5	ENCAPSULATED RELAY PAM-1	0.0000	0.0000	0.0150	0.0750
4098-9605	2	PHOTO SMOKE DETECTOR SSD	0.0001	0.0002	0.0000	0.0000
4098-9788	2	2-WIRE DETECTOR BASE	0.0000	0.0000	0.0000	0.0000
2098-9806	12	REMOTE TEST STATION W/ LED AND KEY SWITCH	0.0000	0.0000	0.0000	0.0000
IDNac Notification Appliances		**Setting**				
4009-9601	2	IDNAC REPEATER 120V PLATINUM UL/ULC	"	0.0032	0.0064	0.0032	0.0064
4906-9202	6	ADDRESSABLE CEILING MNT MC V/O, RED	15	0.0008	0.0048	0.0600	0.3600
4906-9202	1	ADDRESSABLE CEILING MNT MC V/O, RED	75	0.0008	0.0008	0.1800	0.1800
49MT-WRF	2	MULTI-TONE AUDIBLE ONLY, RED, WALL MOUNT	520 Hi	0.0016	0.0032	0.0990	0.1980
49MTV-WRF	15	MULTI-TONE A/V, RED, WALL MOUNT	15	0.0016	0.0240	0.1450	2.1750
49MTV-WRF	10	MULTI-TONE A/V, RED, WALL MOUNT	30	0.0016	0.0160	0.1630	1.6300
49MTV-WRF	6	MULTI-TONE A/V, RED, WALL MOUNT	75	0.0016	0.0096	0.1980	1.1880
49VD-APPLC	7	STROBE, APPLIANCE ONLY, CEILING MOUNT	15	0.0008	0.0056	0.0550	0.3850
49VD-APPLC	2	STROBE, APPLIANCE ONLY, CEILING MOUNT	30	0.0008	0.0016	0.0830	0.1660
49VD-APPLW	1	VD APPLIANCE ONLY WALL MT	15	0.0008	0.0008	0.0470	0.0470
49VD-APPLW	4	VD APPLIANCE ONLY WALL MT	30	0.0008	0.0032	0.0570	0.2280
49VD-APPLW	1	VD APPLIANCE ONLY WALL MT	75	0.0008	0.0008	0.1000	0.1000
49VD-WRF	28	VD, WALL MT, RED, FIRE LABEL	15	0.0008	0.0224	0.0470	1.3160
49VD-WRF	4	VD, WALL MT, RED, FIRE LABEL	30	0.0008	0.0032	0.0570	0.2280
49VD-WRF	1	VD, WALL MT, RED, FIRE LABEL	75	0.0008	0.0008	0.1000	0.1000
		Total IDNac Device Current:		**0.1032**			**8.3074**
		IDNac Current Boost for 29vdc Regulated Output **					**4.7362**
		Peripheral Totals		**0.2932**			**14.0086**
		RUI Totals	**4**	**0.0140**			**0.0140**
		Address Totals	**153 Addresses**	**0.1224**			**0.1530**
		System Totals*:	**Standby**	**0.9848**	**Alarm**		**14.9446**

* Device Address current draw included below (See Additional Current Draws):

Constant current draw of .9mA standby and 1mA alarm per address used. Devices requiring additional current are accounted for in the section labeled "Miscellaneous Peripheral Devices Requiring Additional System Power".

Battery Set #1 (Cabinet/Charger #1)			Standby Current	Standby Total	Alarm Current	Alarm Total
Select ALL Power Supplies on this battery set:						
EPS-1				0.6764		7.1374
		Sub Total		**0.6764**		**7.1374**
Additional Current Draws:						
IDNac Current Boost for 29vdc Regulated Output **						3.1900
RUI Connected Peripheral Devices	4	x 0.0035		= 0.0140	x 0.0035	= 0.0140
MAPNET/IDNet Device Address Communication Current	153	x 0.000800		= 0.1224	x 0.001000	= 0.1530
		Sub Total		**0.8128**		**10.4944**
Spare addressable point capacity	**20%**	31 x 0.0008		= 0.0248	x 0.001	= 0.0310
		Total		**0.8376**		**10.5254**
Standby Time =	**4** Hrs	x 0.8376		= 3.3504	Standby Ah	
Alarm Time =	**5** Min	0.08333 x 10.5254		= 0.8771	Alarm Ah	
				4.2275		
Additional Spare Battery Capacity =	**20%**			+ 0.8455		
				5.0730		
Battery Discharge Factor =	**20%**			+ 1.0146		
Minimum Battery Required	**2081-9272 6.2AH (2x)**					**6.0876**
Battery Supplied	**2081-9287 25AH (2x)**					

* System Totals represent total system current requirements. Those currents may be distributed between multiple battery sets or power supplies as shown above.

** IDNac Current Boost formula: ((29.5 * IDNac Alarm Current) / .92) / 20.4 = Adjusted Current
DC-DC Converter Output = 29.5vdc. Terminal Output is 29vdc due to 0.5vdc internal loss.
Converter Worst Case efficiency is 92%, 20.4vdc represents battery output in 85% depleted state

Repeater Power Supply Battery Set:			Standby	Standby Standby Total	Alarm	Alarm Alarm Total
EPR-1				0.0836		**1.2240**
Additional Current Draw:						
IDNac Current Boost for 29vdc Regulated Output **				0.0000		0.6431
		Total		**0.0836**		**1.8671**
Standby Time =	**4** Hrs	x 0.8376		= 0.3344	Standby Ah	
Alarm Time =	**5** Min	0.08333 x 1.8671		= 0.1556	Alarm Ah	
				0.4900		
Additional Spare Battery Capacity =	**20%**			+ 0.0980		
				0.5880		
Battery Discharge Factor =	**20%**			+ 0.1176		
Minimum Battery Required	**2081-9272 6.2AH (2x)**					**0.7056**
Battery Supplied	**2081-9272 6.2AH (2x)**					

Repeater Power Supply Battery Set:			Standby Total	Alarm Total
EPR-2			0.0884	**1.6800**
Additional Current Draw:				
IDNac Current Boost for 29vdc Regulated Output **			0.0000	0.9031
		Total	**0.0884**	**2.5831**
Standby Time =	**4** Hrs	x 0.8376	= 0.3536	Standby Ah
Alarm Time =	**5** Min	0.08333 x 2.5831	= 0.2153	Alarm Ah
			0.5689	
Additional Spare Battery Capacity =	**20%**		+ 0.1138	
			0.6826	
Additional Spare Battery Capacity =	**20%**		+ 0.1365	
Minimum Battery Required	**2081-9272 6.2AH (2x)**			**0.8192**
Battery Supplied	**2081-9272 6.2AH (2x)**			

IDNET CHANNEL N1:T4-M11 — **ADDRESSES IN USE: 153 (61.2%) | SPARE ADDRESSES: 97 (38.8%)**

Address	Device Type	Point Type	Location Description	SWITCH SETTINGS 1 2 3 4 5 6 7 8	
N1:T4-M11-1	PHOTO	SMOKE	1-M11-1 FLR 1W ELEC 1-CS16	X	ON
N1:T4-M11-2	PHOTO	SMOKE	1-M11-2 FLR 1W OR-11 1-SS10 SW	X	ON
N1:T4-M11-3	PHOTO	SMOKE	1-M11-3 FLR 1W OR-11 1-SS10 NE	X X	ON
N1:T4-M11-4	RIAM	DHOLDER	1-M11-4 FLR 1W OR-11 1-SS100	X	ON
N1:T4-M11-5	HEAT	HEAT	1-M11-5 FLR 1W TOILET CS15	X X	ON
N1:T4-M11-6	PHOTO	VSMOKE	1-M11-6 FLR 1W CORR 1-CS14	X	ON
N1:T4-M11-7	PHOTO	VSMOKE	1-M11-7 FLR 1W CORR 1-CS14	X X X	ON
N1:T4-M11-8	PHOTO	SMOKE	1-M11-8 FLR 1W STER STG 1-CS10 NORTH	X X	ON
N1:T4-M11-9	PHOTO	SMOKE	1-M11-9 FLR 1W STER STG 1-CS10	X	ON
N1:T4-M11-10	PHOTO	SMOKE	1-M11-10 FLR 1W JANT-CS13	X X	ON
N1:T4-M11-11	PHOTO	VSMOKE	1-M11-11 FLR 1W JAN 1-SS038	X X X	ON
N1:T4-M11-12	PHOTO	SMOKE	1-M11-12 FLR 1W STER STG 1-CS10 CTR	X X	ON
N1:T4-M11-13	PHOTO	SMOKE	1-M11-13 FLR 1W CENTRAL STERILE	X X X	ON
N1:T4-M11-14	PHOTO	SMOKE	1-M11-14 FLR 1W STER STG 1-CS10 SOUTH	X X X	ON
N1:T4-M11-15	PHOTO	SMOKE	1-M11-15 FLR 1W STER STG 1-CS10 SOUTH	X X X X	ON
N1:T4-M11-16	PHOTO	SMOKE	1-M11-16 FLR 1W MAKE UP 1-CS07 W	X	ON
N1:T4-M11-17	PHOTO	SMOKE	1-M11-17 FL 1W CENTRAL STERILE	X X	ON
N1:T4-M11-18	PHOTO	SMOKE	1-M11-18 FL 1W MAKE UP 1-CS07 @ CORR	X X	ON
N1:T4-M11-19	PHOTO	SMOKE	1-M11-19 FL 1W STERILIZER 1-CS08	X X X	ON
N1:T4-M11-20	PHOTO	SMOKE	1-M11-20 FL 1W CLEAN STORAGE 1-CS06	X X	ON
N1:T4-M11-21	PHOTO	SMOKE	1-M11-21 FL 1W DECON 1-CS03 NORTH	X X X	ON
N1:T4-M11-22	PHOTO	SMOKE	1-M11-22 FL 1W DECON 1-CS03 SOUTH	X X X	ON
N1:T4-M11-23	PHOTO	SMOKE	1-M11-23 FL 1W CART WASH 1-CS04 NORTH	X X X	ON
N1:T4-M11-24	PHOTO	SMOKE	1-M11-24 FL 1W CART WASH 1-CS04 SOUTH	X X	ON
N1:T4-M11-25	PHOTO	SMOKE	1-M11-25 FL 1W CSS OFF 1-CS02	X X X	ON
N1:T4-M11-26	PHOTO	SMOKE	1-M11-26 FL 1W DI WATER 1-CS09	X X X	ON
N1:T4-M11-27	PHOTO	SMOKE	1-M11-27 FL 1W SURGERY VENDOR 1-CS01	X X X X	ON
N1:T4-M11-28	PHOTO	SMOKE	1-M11-28 FL 1W CLEAN STORAGE 1-CS05	X X X	ON
N1:T4-M11-29			SPARE	X X X X	ON
N1:T4-M11-30	RPHOTO	LSDUCT	1-M11-30 FLR 1W STER STG SUP FSD 1-CS10	X X X X	ON
N1:T4-M11-31	RPHOTO	LSDUCT	1-M11-31 FLR 1W CARTWASH 1-CS04 RET FSD	X X X X X	ON
N1:T4-M11-32	RPHOTO	LSDUCT	1-M11-32 FLR 1W CSS OFF 1-CS02 RET FSD	X	ON
N1:T4-M11-33	RPHOTO	LSDUCT	1-M11-33 FLR 1W SRG VEND 1-CS01 RET FSD	X X	ON
N1:T4-M11-34			SPARE	X X X	ON
N1:T4-M11-35	RPHOTO	LSDUCT	1-M11-35 FLR 1W DECON 1- CS03 SUP FSP	X X X	ON
N1:T4-M11-36			SPARE	X X	ON
N1:T4-M11-37			SPARE	X X X	ON
N1:T4-M11-38			SPARE	X X X	ON
N1:T4-M11-39	RIAM	RELAY	1-M11-39 FLR 1W OR #11 ALARM TO DCC	X X X X	ON
N1:T4-M11-40	RIAM	RELAY	1-M11-40 FLR 1W OR 63 ALARM TO DDC	X X	ON
N1:T4-M11-41	RPHOTO	LSDUCT	1-M11-41 FLR 1W ELEC RM 1-CS16 SUP FSD	X X X	ON
N1:T4-M11-42	RPHOTO	LSDUCT	1-M11-42 FLR 1W ELEC RM 1-CS16 RET FSD	X X X	ON
N1:T4-M11-43	RPHOTO	LSDUCT	1-M11-43 FLR 1W TLT 1-CS15 SUP FSD	X X X X	ON
N1:T4-M11-44	RPHOTO	LSDUCT	1-M11-44 FLR 1W OR-11 1-SS100 RET FSD	X X X	ON
N1:T4-M11-45	PHOTO	VSMOKE	1-M11-45 FLR 1W OR-1 1-SS119 NE	X X X X	ON
N1:T4-M11-46	PHOTO	VSMOKE	1-M11-46 FLR 1W OR-1 1-SS119 SW	X X X X	ON
N1:T4-M11-47	RIAM	DHOLDER	1-M11-47 FLR 1W OR-1 1-SS119 DIH	X X X X	ON
N1:T4-M11-48	PHOTO	VSMOKE	1-M11-48 FLR 1W OR-2 1-SS119 NE	X X X	ON
N1:T4-M11-49	PHOTO	VSMOKE	1-M11-49 FLR 1W OR-2 1-SS119 SW	X X X X	ON
N1:T4-M11-50	RIAM	DHOLDER	1-M11-50 FLR 1W OR-2 1-SS119 DIH	X X X X	ON
N1:T4-M11-51	PHOTO	VSMOKE	1-M11-51 FLR 1W CYSTO OR-3 1-SS129 NE	X X X X	ON
N1:T4-M11-52	PHOTO	VSMOKE	1-M11-52 FLR 1W CYSTO OR-3 1-SS129 SW	X X X X	ON
N1:T4-M11-53	RIAM	DHOLDER	1-M11-53 FLR 1W CYSTO OR-3 1-SS129 DIH	X X X X	ON
N1:T4-M11-54	PHOTO	VSMOKE	1-M11-54 FLR 1W EQUIP STG 1-SS131	X X X X	ON
N1:T4-M11-55	PHOTO	VSMOKE	1-M11-55 FLR 1W WOMENS LOCKER 1-SS135	X X X X X	ON
N1:T4-M11-56	HEAT	HEAT	1-M11-56 FLR 1W WOMENS BATH 1-SS136	X X X X	ON
N1:T4-M11-57	PHOTO	VSMOKE	1-M11-57 FLR 1W MENS LOCKER 1-SS138	X X X X	ON
N1:T4-M11-58	PHOTO	VSMOKE	1-M11-58 FLR 1W NURSE LOUNGE 1-SS139	X X X X	ON
N1:T4-M11-59			SPARE	X X X X X	ON
N1:T4-M11-60			SPARE	X X X X	ON
N1:T4-M11-61			SPARE	X X X X X	ON
N1:T4-M11-62	RPHOTO	LSDUCT	1-M11-62 FLR 1W OR-11 1-SS100 SUP FSD	X X X X X	ON
N1:T4-M11-63	RPHOTO	LSDUCT	1-M11-63 FLR 1W CORR 1-SS112 SUP FSD	X X X X X X	ON
N1:T4-M11-64			SPARE	X X X	ON
N1:T4-M11-65	RIAM	RELAY	1-M11-65 FLR 1W OR-1 PHOENIX VALVE	X X	ON
N1:T4-M11-66	RIAM	RELAY	1-M11-66 FLR 1W OR-2 PHOENIX VALVE	X X	ON
N1:T4-M11-67	PHOTO	VSMOKE	1-M11-67 FLR 1W CORR 1-SS0037 @ STER STG	X X X	ON
N1:T4-M11-68	PHOTO	VSMOKE	1-M11-68 FLR 1W CORR 1-SS037 @ STG ALC	X X	ON
N1:T4-M11-69	PHOTO	VSMOKE	1-M11-69 FLR 1W CORR 1-SS029 @ N CORR	X X X	ON
N1:T4-M11-70	PHOTO	SMOKE	1-M11-70 FLR 1W CORR 1-SS036	X X X	ON
N1:T4-M11-71	PHOTO	SMOKE	1-M11-71 FLR 1W CORR 1-SS036	X X X	ON
N1:T4-M11-72	PHOTO	SMOKE	1-M11-72 FLR 1W STOR 1-SS035	X X X	ON
N1:T4-M11-73	PHOTO	SMOKE	1-M11-73 FLR 1W SOILED FLUIDS 1-SS032	X X X X	ON
N1:T4-M11-74	RIAM	DHOLDER	1-M11-74 FLR 1W OR 4 CORR 1-SS036	X X X X	ON
N1:T4-M11-75	RIAM	RELAY	1-M11-75 FLR 1W OR 4 PHOENIX VALVE	X X X X	ON
N1:T4-M11-76	PHOTO	SMOKE	1-M11-76 FLR 1W DAVINCI OR 4 1-SS031 NW	X X X X	ON
N1:T4-M11-77	PHOTO	SMOKE	1-M11-77 FLR 1W DAVINCI OR 4 1-SS031 SE	X X X X	ON
N1:T4-M11-78	PHOTO	VSMOKE	1-M11-78 FLR 1W PASS 1-PA11	X X X X	ON
N1:T4-M11-79	PHOTO	VSMOKE	1-M11-79 FLR 1W CLEAN UTILITY 1-PA07	X X X X X	ON
N1:T4-M11-80	PHOTO	VSMOKE	1-M11-80 FLR 1W CNC OFFICE 1-PA09	X X X	ON
N1:T4-M11-81	PHOTO	VSMOKE	1-M11-81 FLR 1W PACU RECOVERY 1-PA01 N	X X X X	ON
N1:T4-M11-82	PHOTO	VSMOKE	1-M11-82 FLR 1W PASS 1-PA12	X X X X	ON
N1:T4-M11-83	PHOTO	VSMOKE	1-M11-83 FLR 1W STF LNGE 1-PA14	X X X X	ON
N1:T4-M11-84	HEAT	HEAT	1-M11-84 FLR 1W TLT PA15	X X X	ON
N1:T4-M11-85	PHOTO	SMOKE	1-M11-85 FLR 1W PACU RECOVERY 1-PA01 S	X X X X	ON
N1:T4-M11-86	PHOTO	SMOKE	1-M11-86 FLR 1W SOILED UTILITY 1-PA08	X X X X	ON
N1:T4-M11-87	PHOTO	SMOKE	1-M11-87 FLR 1W PASS 1-PA06	X X X X X	ON
N1:T4-M11-88	PHOTO	SMOKE	1-M11-88 FLR 1W ELEC 1-PA05	X X X X	ON
N1:T4-M11-89	ADRPUL	PULL	1-M11-89 FLR 1W NURSE STATION A 1-PA10	X X X X	ON
N1:T4-M11-90	RIAM	RRELAY	1-M11-90 FLR 1W DAVINCI OR 4 1-SS029	X X X X	ON
N1:T4-M11-91			SPARE	X X X X X	ON
N1:T4-M11-92	PHOTO	VSMOKE	1-M11-92 FLR 1W CORR 1-SS122 @STORAGE	X X X X	ON
N1:T4-M11-93	PHOTO	VSMOKE	1-M11-93 FLR 1W STORAGE 1-SS125	X X X X	ON
N1:T4-M11-94			SPARE	X X X X X	ON
N1:T4-M11-95			SPARE	X X X X X	ON
N1:T4-M11-96			SPARE	X X X	ON
N1:T4-M11-97			SPARE	X X X X	ON
N1:T4-M11-98			SPARE	X X X X	ON
N1:T4-M11-99			SPARE	X X X X	ON
N1:T4-M11-100	PHOTO	VSMOKE	1-M11-100 FLR 1W PASS 1-SS204 S	X X X X	ON
N1:T4-M11-101	PHOTO	VSMOKE	1-M11-101 FLR 1W PASS 1-SS204 CTR	X X X X	ON
N1:T4-M11-102	PHOTO	VSMOKE	1-M11-102 FLR 1W PASS 1-SS204 N	X X X	ON
N1:T4-M11-103	PHOTO	VSMOKE	1-M11-103 FLR 1W STORE ROOM 1-SS201	X X X X	ON
N1:T4-M11-104	PHOTO	VSMOKE	1-M11-104 FLR 1W EVS 1-SS202	X X X	ON
N1:T4-M11-105	HEAT	HEAT	1-M11-105 FLR 1W TOILET 1-SS203	X X X	ON
N1:T4-M11-106	ADRPUL	PULL	1-M11-106 FLR 1W NURSE STATION A 1-SS205	X X X X	ON
N1:T4-M11-107	PHOTO	VSMOKE	1-M11-107 FLR 1W PASS E 1-SS212	X X X X	ON
N1:T4-M11-108	HEAT	HEAT	1-M11-108 FLR 1W TOILET 1-SS206	X X X X	ON
N1:T4-M11-109	PHOTO	VSMOKE	1-M11-109 FLR 1W MEDS 1-SS207	X X X X	ON
N1:T4-M11-110	PHOTO	VSMOKE	1-M11-110 FLR 1W SOILED UTILITY 1-SS208	X X X X	ON
N1:T4-M11-111	PHOTO	VSMOKE	1-M11-111 FLR 1W OFFICE 1-SS209	X X X X X	ON
N1:T4-M11-112	PHOTO	VSMOKE	1-M11-112 FLR 1W PASSAGE 1-SS210	X X X X	ON
N1:T4-M11-113	PHOTO	VSMOKE	1-M11-113 FLR 1W WORK ROOM 1-SS215	X X X X	ON
N1:T4-M11-114	PHOTO	VSMOKE	1-M11-114 FLR 1W CLEAN UTILITY 1-SS214	X X X X	ON
N1:T4-M11-115	ADRPUL	PULL	1-M11-115 FLR 1W NURSE STATION 1-SS213	X X X X	ON
N1:T4-M11-116	PHOTO	SMOKE	1-M11-116 FLR 1W PASSAGE W 1-SS212	X X X X	ON
N1:T4-M11-117	HEAT	HEAT	1-M11-117 FLR 1W TOILET 1-SS221	X X X X X	ON
N1:T4-M11-118	PHOTO	VSMOKE	1-M11-118 FLR 1W NOURISHMENT 1-SS222	X X X X X	ON
N1:T4-M11-119	PHOTO	VSMOKE	1-M11-119 FLR 1W PASS E 1-SS224	X X X X X	ON
N1:T4-M11-120	PHOTO	VSMOKE	1-M11-120 FLR 1W PASS N 1-SS224	X X X X	ON
N1:T4-M11-121	PHOTO	VSMOKE	1-M11-121 FLR 1W PASS S 1-SS224	X X X X X	ON
N1:T4-M11-122	ADRPUL	PULL	1-M11-122 FLR 1W NURSE STAT C 1-SS223	X X X X X	ON
N1:T4-M11-123	HEAT	HEAT	1-M11-123 FLR 1W TLT 1-SS219	X X X X X	ON
N1:T4-M11-124	HEAT	HEAT	1-M11-124 FLR 1W TLT 1-SS218	X X X X X	ON
N1:T4-M11-125	PHOTO	VSMOKE	1-M11-125 FLR 1W NURSE LOUNGE 1-SS217	X X X X X X	ON

NOTE: THE LABELS SHOWN ABOVE WILL BE USED FOR PROGRAMMING PURPOSES.
THE LABELS ARE BASED UPON INFORMATION SHOWN ON THE ARCHITECTURAL DRAWINGS.
ANY CHANGES TO THESE LABELS MUST BE NOTED ON THE SUBMITTAL REVIEW, PRIOR TO PROGRAMMING.
POINTS SHOWN IN ITALIC TEXT REFER TO EXISTING DEVICES.

IDNET CHANNEL N1:T4-M11 — **ADDRESSES IN USE: 153 (61.2%) | SPARE ADDRESSES: 97 (38.8%)**

Address		Location Description	SWITCH SETTINGS 1 2 3 4 5 6 7 8	
N1:T4-M11-126	HEAT	1-M11-126 FLR 1W TOILET 1-SS220	X X X X X X X	ON
N1:T4-M11-127	PHOTO	1-M11-127 FLR 1W COMM 1-SS216	X X X X X X X	ON
N1:T4-M11-128	PHOTO	1-M11-128 ROOF RTU-3 SUP DET TO DDC	X	ON
N1:T4-M11-129	PHOTO	1-M11-129 ROOF RTU-3 RET DET TO DDC	X	ON
N1:T4-M11-130	RIAM	1-M11-130 ROOF RTU-3 SUPPLY TO DDC	X	ON
N1:T4-M11-131	RIAM	1-M11-131 ROOF RTU-3 RETURN TO DDC	X X	ON
N1:T4-M11-132	RIAM	1-M11-132 FLR 1W ALARM TO DDC AHU-3	X	ON
N1:T4-M11-133	RIAM	1-M11-133 FLR 1W SUPV FSD TO DDC AHU-3	X X	ON
N1:T4-M11-134	RIAM	1-M11-134 FLR 1W RET FSD TO DDC AHU-3	X X	ON
N1:T4-M11-135	RIAM	1-M11-135 FL 1W PACU BY HALL SEC RELEASE	X X X	ON
N1:T4-M11-136		SPARE	X	ON
N1:T4-M11-137	PHOTO	VSMOKE 1-M11-137 FLR 1 1W CHANGING AREA 7200A	X X	ON
N1:T4-M11-138	PHOTO	VSMOKE 1-M11-138 FLR 1W BREAK RM 7200A	X X	ON
N1:T4-M11-139	**HEAT**	**1-M11-139 FLR 1W O/S RAD 7202A INTERIM**	X X X	ON
N1:T4-M11-140	PHOTO	VSMOKE 1-M11-140 FLR1 1W STAFF HALL 7203A E	X X X	ON
N1:T4-M11-141	PHOTO	VSMOKE 1-M11-141 FLR 1W STAFF HALL 7203A W	X X X	ON
N1:T4-M11-142	PHOTO	VSMOKE 1-M11-142 FLR 1W TECH WORK AREA 7204A	X X X	ON
N1:T4-M11-143	PHOTO	VSMOKE 1-M11-143 FLR 1W EQUIPMENT RM 7203B	X X X X	ON
N1:T4-M11-144	PHOTO	VSMOKE 1-M11-144 FLR 1W CONTROL AREA 7402B	X X	ON
N1:T4-M11-145	PHOTO	VSMOKE 1-M11-145 FLR 1W PATIENT HOLDING 7402D	X X	ON
N1:T4-M11-146	PHOTO	VSMOKE 1-M11-146 FLR1 1W CONTROL AREA 7402B S	X X	ON
N1:T4-M11-147	IAM	SMOKE 1-M11-147 FLR 1W MR2 2 7402A HW SMKDET	X X X	ON
N1:T4-M11-148		SPARE	X X	ON
N1:T4-M11-149		SPARE	X X X	ON
N1:T4-M11-150	IAM	SDUCT 1-M11-150 FLR 1W CRAC1 INTERGRAL SMK DET	X X X	ON
N1:T4-M11-151	PHOTO	SMOKE 1-M11-151 FLR 1W EQUIP RM 1W-8902A	X X X X	ON
N1:T4-M11-152	PHOTO	SMOKE 1-M11-152 FLR1 IR RM 03 1W-8113A N	X X	ON
N1:T4-M11-153	PHOTO	SMOKE 1-M11-153 FLR1 IR RM 03 1W-8113A S	X X	ON
N1:T4-M11-154	PHOTO	SMOKE 1-M11-154 FLR 1W CONTROL RM 1W-8112A	X X X X	ON
N1:T4-M11-155	RIAM	RELAY 1-M11-155 FLR 1W IR RM 03 MUSIC SHUT-OFF	X X X X	ON
N1:T4-M11-156	IAM	LSDUCT 1-M11-156FLR 1W MR2 7402A CRAC UNIT SMK	X X X	ON
N1:T4-M11-157		SPARE	X X X X	ON
N1:T4-M11-158		SPARE	X X X X	ON
N1:T4-M11-159		SPARE	X X X X X	ON
N1:T4-M11-160		SPARE	X X X	ON
N1:T4-M11-161		SPARE	X X X	ON
N1:T4-M11-162		SPARE	X X	ON
N1:T4-M11-163		SPARE	X X X	ON
N1:T4-M11-164		SPARE	X X X	ON
N1:T4-M11-165		SPARE	X X X X	ON
N1:T4-M11-166		SPARE	X X X	ON
N1:T4-M11-167		SPARE	X X X X	ON
N1:T4-M11-168		SPARE	X X X	ON
N1:T4-M11-169		SPARE	X X X	ON
N1:T4-M11-170		SPARE	X X X X	ON
N1:T4-M11-171		SPARE	X X X X	ON
N1:T4-M11-172		SPARE	X X X X	ON
N1:T4-M11-173		SPARE	X X X X	ON
N1:T4-M11-174		SPARE	X X X X	ON
N1:T4-M11-175		SPARE	X X X X X	ON
N1:T4-M11-176		SPARE	X X X X	ON
N1:T4-M11-177		SPARE	X X X X	ON
N1:T4-M11-178		SPARE	X X X X	ON
N1:T4-M11-179		SPARE	X X X X	ON
N1:T4-M11-180		SPARE	X X X X	ON
N1:T4-M11-181		SPARE	X X X X	ON
N1:T4-M11-182		SPARE	X X X X	ON
N1:T4-M11-183		SPARE	X X X X X	ON
N1:T4-M11-184		SPARE	X X X X	ON
N1:T4-M11-185		SPARE	X X X X X	ON
N1:T4-M11-186		SPARE	X X X X	ON
N1:T4-M11-187		SPARE	X X X X X	ON
N1:T4-M11-188		SPARE	X X X X X	ON
N1:T4-M11-189		SPARE	X X X X X	ON
N1:T4-M11-190		SPARE	X X X X X	ON
N1:T4-M11-191		SPARE	X X X X X	ON
N1:T4-M11-192		SPARE	X X X	ON
N1:T4-M11-193		SPARE	X X X	ON
N1:T4-M11-194		SPARE	X X X	ON
N1:T4-M11-195		SPARE	X X X	ON
N1:T4-M11-196		SPARE	X X X	ON
N1:T4-M11-197		SPARE	X X X	ON
N1:T4-M11-198		SPARE	X X X X	ON
N1:T4-M11-199		SPARE	X X X X	ON
N1:T4-M11-200		SPARE	X X X	ON
N1:T4-M11-201		SPARE	X X X	ON
N1:T4-M11-202		SPARE	X X X X	ON
N1:T4-M11-203		SPARE	X X X X X	ON
N1:T4-M11-204		SPARE	X X X	ON
N1:T4-M11-205		SPARE	X X X	ON
N1:T4-M11-206		SPARE	X X X X	ON
N1:T4-M11-207		SPARE	X X X X X	ON
N1:T4-M11-208		SPARE	X X X	ON
N1:T4-M11-209		SPARE	X X X	ON
N1:T4-M11-210		SPARE	X X X	ON
N1:T4-M11-211		SPARE	X X X X	ON
N1:T4-M11-212		SPARE	X X X X	ON
N1:T4-M11-213		SPARE	X X X X	ON
N1:T4-M11-214		SPARE	X X X	ON
N1:T4-M11-215		SPARE	X X X X	ON
N1:T4-M11-216		SPARE	X X X X	ON
N1:T4-M11-217		SPARE	X X X X	ON
N1:T4-M11-218		SPARE	X X X X	ON
N1:T4-M11-219		SPARE	X X X X	ON
N1:T4-M11-220	RIAM	RELAY 1-M11-220 FLR 1W RTU-2 FSD	X X X X	ON
N1:T4-M11-221	RIAM	RELAY 1-M11-221 FLR 1W RTU-2 FSD	X X X X X	ON
N1:T4-M11-222	RIAM	RELAY 1-M11-222 FLR 1W RTU-2 FSD	X X X X X	ON
N1:

MEDICAL CENTER OF AURORA SOUTH TOWER NODE 1 FACP 4100es FACP

Keynote	Module	Qty	Description	* / Setting	Standby Current	Total Standby	Alarm Current	Total Alarm
	Panel Equipment							
	4100-7150	1	MASTER CONTROLLER UPGRADE W/ 2X40 DISPLAY (4100 BA		0.1630	0.1630	0.2100	0.2100
	4100-0304	1	STYLE 7 REMOTE UNIT INTERFACE		0.0850	0.0850	0.0850	0.0850
	4100-5005	8	ZONE MODULE, 8 IDC, CLASS B		0.0750	0.6000	0.1950	1.5600
	4100-3003	2	8 PT AUX RELAY MODULE 3 AMP		0.0250	0.0500	0.2800	0.5600
	4100-0110	5	MAPNET II ADDRESSABLE MODULE	*	0.2700	1.3500	0.2900	1.4500
	4100-4321	10	6 CIRCUIT CLASS B (STYLE Y)		0.0250	0.2500	0.0700	0.7000
	4100-6078	1	NETWORK IF CARD, MODULAR		0.0460	0.0460	0.0460	0.0460
	4100-6056	2	NETWORK MEDIA CARD WIRED		0.0550	0.1100	0.0550	0.1100
	4100-5101	2	EXPANSION PWR SUPPLY (XPS) - 120VAC 60HZ		0.0500	0.1000	0.0500	0.1000
	4100-6038	2	DUAL RS-232 IF CARD		0.1320	0.2640	0.1320	0.2640
	4100-6005	1	MASTER CONTROLLER POWER SUPPLY		0.0000	0.0000	0.0000	0.0000
	4100-3110	3	IDNet2+2 MODULE - UP TO 250 DEVICES 4 ISOLATED LOOPS	*	0.0500	0.1500	0.1000	0.3000
	4100-0108	2	EXPANSION 120V 8AMP POWER SUPPLY		0.0000	0.0000	0.0000	0.0000
			Panel Totals			**3.1680**		**5.3850**
	IDNet Addressable Devices (SLC)							
	4090-9001	7	IDNET SUPERVISED IAM	*	Constant current draw of .8mA standby and 1mA alarm per address used. Devices requiring additional current are accounted for in the section labeled "Miscellaneous Peripheral Devices Requiring Additional System Power".			
	4090-9002	1	IDNET RELAY IAM	*				
	4098-9714	**22**	**TRUEALARM PHOTO SMOKE SENSOR**					
3	**4098-9733**	**8**	**TRUEALARM HEAT SENSOR**	*				
	4098-9756	2	TRUEALARM DUCT SMOKE SENSOR W/ RELAY OUTPUT	*				
	4098-9789	1	TRUEALARM SENSOR BASE W/ LED OUTPUT	*				
3	**4098-9792**	**29**	**TRUEALARM SENSOR BASE**	*				
	4099-9006	10	ADDRESSABLE DOUBLE ACTION MANUAL STATION, PUSH	*				
	Mapnet Addressable Devices (SLC)							
	2190-9155	1	MAPNET CLASS B MONITOR ZAM	*				
	2190-9161	6	MAPNET CLASS B SIGNAL ZAM	*				
	2190-9163	45	MAPNET UNSUPERVISED CONTROL ZAM	*				
	2190-9172	41	MAPNET SUPERVISED IAM	*				
	2190-9173	3	MAPNET 2 POINT INPUT/OUTPUT ZAM	*				
	2099-9795	22	MAPNET SINGLE ACTION PULL STATION	*				
	4098-9714	334	TRUEALARM PHOTO SMOKE SENSOR					
	4098-9733	32	TRUEALARM HEAT SENSOR	*				
	4098-9756	36	TRUEALARM DUCT SMOKE SENSOR W/ RELAY OUTPUT	*				
	4098-9789	328	TRUEALARM SENSOR BASE W/ LED OUTPUT	*				
	4098-9792	38	TRUEALARM SENSOR BASE	*				
	Miscellaneous Peripheral Devices That Require (Additional) System Power							
	4098-9843	38	ENCAPSULATED RELAY PAM-SD		0.0000	0.0000	0.0150	0.5700
	4098-9756	38	TRUEALARM DUCT SMOKE SENSOR W/ RELAY OUTPUT		0.0030	0.1140	0.0150	0.5700
	4603-9101	11	SERIAL LCD ANNUNCIATOR		0.0650	0.7150	0.1400	1.5400
	2098-9808	1	REMOTE ALARM INDICATOR		0.0010	0.0010	0.0000	0.0000
	Notification Appliances			**Setting**				
	4009-9001	2	FOUR CIRCUIT NAC EXTENDER, 120 VAC		0.0000	0.0000	0.0150	0.0300
	4903-9219	10	HORN/STROBE, NON-SYNC, RED, WALL MTD	15	0.0000	0.0000	0.1330	1.3300
3	**4903-9292**	**94**	**CH70-2415W-FR, CHIME/STROBE, NON-SYNC, RED, WALL MTD**	**15**	**0.0000**	**0.0000**	**0.0700**	**6.5800**
	4904-9137	116	15CD VISIBLE ONLY RED	15	0.0000	0.0000	0.0900	10.4400
	4906-9101	1	V/O MC NON-ADDRESS, RED, WALL	15	0.0000	0.0000	0.0600	0.0600
	4906-9101	5	V/O MC NON-ADDRESS, RED, WALL	75	0.0000	0.0000	0.1860	0.9300
	CH70-24MCW-FR	4	MULTI CD CHIME STROBE, WALL MNT, RED	15	0.0000	0.0000	0.0820	0.3280
	RSS-24MCW-FR	1	MULTI CD STROBE, WALL MNT, RED	15	0.0000	0.0000	0.0600	0.0600
			Peripheral Totals			**0.8300**		**22.4380**
			RUI Totals	**11**		**0.0385**		**0.0385**
			Address Totals	**593.5 Addresses**		**0.9640**		**0.9740**
			System Totals*:		**Standby**	**5.0005**	**Alarm**	**28.8355**

*** Device Address current draw included below (See Additional Current Draws):**
1. 2-wire detector alarm current is included in the alarm current of the Initiating Device Circuit.

			Standby Current	Standby Total	Alarm Current	Alarm Total
Battery Set #1 (Cabinet/Charger #1)						
Select ALL Power Supplies on this battery set:						
PS-1				1.0930		8.9520
PS-2				1.2470		8.1800
PS-3				0.7010		8.4000
XPS-1				0.1570		0.4960
XPS-2				0.8000		1.7950
			Sub Total	**3.9980**		**27.8230**
Additional Current Draws:						
RUI Connected Peripheral Devices		11	x 0.0035	= 0.0385	x 0.0035	= 0.0385
MAPNET/IDNet Device Address Communication Current		594	x 0.001624	= 0.9640	x 0.001641	= 0.9740
			Sub Total	**5.0005**		**28.8355**
Spare addressable point capacity	**20%**	119	x 0.001624	= 0.1933	x 0.001641	= 0.1953
			Total	**5.1937**		**29.0308**
Standby Time =	**4** Hrs		x 5.1937	= 20.7749	Standby Ah	
Alarm Time =	**5** Min		0.08333 x 29.0308	= 2.4192	Alarm Ah	
				23.1941		
Additional Spare Battery Capacity =	**20%**		+	4.6388		
				27.8330		
Battery Discharge Factor =	**20%**		+	5.5666		
Minimum Battery Required	**2081-9296 50AH (2x)**			**33.3996**		
Battery Supplied	**2081-9296 50AH (2x)**					

*** System Totals represent total system current requirements. Those currents may be distributed between multiple battery sets or power supplies as shown above.**

MAPNET CHANNEL 1:M1

Keynote	Address	Device Type	Point Type	Location Description	SW 1	SW 2	SW 3	SW 4	SW 5	SW 6	SW 7	SW 8		9
	1:M1-1	ADRPUL	PULL	1:M1-1 FLR 1 W - EXIT BY X-RAY WAITING	X								ON	
	1:M1-2	ADRPUL	PULL	1:M1-2 FLR 1W - EXIT HALL BY NUCLEAR MED		X							ON	
	1:M1-3	ADRPUL	PULL	1:M1-3 FLR 1W - EXIT BY INTERVENTIONAL	X	X							ON	
	1:M1-4	ADRPUL	PULL	1:M1-4 FLR 1 CENTRAL TWR EXIT BY MRI			X						ON	
	1:M1-5	RPHOTO	SDUCT	1:M1-5 X-RAY ROOF - AHU-97-9 DUCT D.	X		X						ON	
	1:M1-6	RPHOTO	SDUCT	1:M1-6 X-RAY ROOF - AHU-97-9 DUCT D		X	X						ON	
	1:M1-7	RPHOTO	SDUCT	1:M1-7 X-RAY ROOF - AHU-97-14 DUCT D	X	X	X						ON	
	1:M1-8	RPHOTO	SDUCT	1:M1-8 X-RAY ROOF - AHU-97-14 DUCT D.				X					ON	
	1:M1-9	RPHOTO	SDUCT	1:M1-9 X-RAY ROOF - AHU-97-15 DUCT D.	X			X					ON	
	1:M1-10	RPHOTO	SDUCT	1:M1-10 X-RAY ROOF - AHU-15 DUCT DET.		X		X					ON	
	1:M1-11	GENIAM	SO	1:M1-11 FLR 1 CENTRAL TWR X-RAY HALL	X	X		X					ON	
	1:M1-12	RZAM	RELAY	1:M1-12 X-RAY ROOF - AHU-97-9 DOWN			X	X					ON	
	1:M1-13	RZAM	RELAY	1:M1-13 X-RAY ROOF AHU 97-14 SHUTDOWN	X		X	X					ON	
	1:M1-14	RZAM	RELAY	1:M1-14 X-RAY ROOF AHU 97-15 SHUTDOWN		X	X	X					ON	
	1:M1-15	PHOTO	VSMOKE	1:M1-15 FLR 1W - HALL BY X-RAY WAITING	X	X	X	X					ON	
	1:M1-16	PHOTO	VSMOKE	1:M1-16 FLR 1W - X-RAY - PET SCAN					X				ON	
	1:M1-17	PHOTO	VSMOKE	1:M1-17 FLR 1W - X-RAY - PET SCAN	X				X				ON	
	1:M1-18	PHOTO	VSMOKE	1:M1-18 FLR 1W - HALL BY X-RAY WAITING		X			X				ON	
	1:M1-19	PHOTO	VSMOKE	1:M1-19 FLR 1W - HALL BY X-RAY WAITING	X	X			X				ON	
	1:M1-20	PHOTO	VSMOKE	1:M1-20 FLR 1W - X-RAY WAITNG RM			X		X				ON	
	1:M1-21	PHOTO	VSMOKE	1:M1-21 FLR 1W - HALL BY X-RAY WAITING	X		X		X				ON	
	1:M1-22	PHOTO	VSMOKE	1:M1-22 FLR 1W - HALL BY X-RAY WAITING		X	X		X				ON	
	1:M1-23	PHOTO	VSMOKE	1:M1-23 FLR 1W - BY PATHOLOGY STAIRS	X	X	X		X				ON	
	1:M1-24	PHOTO	VSMOKE	1:M1-24 FLR 1W - HALL BY PATHOLOGY				X	X				ON	
	1:M1-25	PHOTO	VSMOKE	1:M1-25 FLR 1W - HALL BY PATHOLOGY	X			X	X				ON	
	1:M1-26			SPARE		X		X	X				ON	
	1:M1-27			SPARE	X	X		X	X				ON	
	1:M1-28			SPARE			X	X	X				ON	
	1:M1-29			SPARE	X		X	X	X				ON	
	1:M1-30			SPARE		X	X	X	X				ON	
	1:M1-31			SPARE	X	X	X	X	X				ON	
	1:M1-32			SPARE						X			ON	
	1:M1-33			SPARE	X					X			ON	
	1:M1-34			SPARE		X				X			ON	
	1:M1-35			SPARE	X	X				X			ON	
	1:M1-36	PHOTO	VSMOKE	1:M1-36 FLR 1W - PATHOLOGY LAB			X			X			ON	
	1:M1-37	PHOTO	VSMOKE	1:M1-37 FLR 1W - ULTRASOUND SUITE	X		X			X			ON	
	1:M1-38	PHOTO	VSMOKE	1:M1-38 FLR 1W - ULTRASOUND SUITE		X	X			X			ON	
	1:M1-39	PHOTO	VSMOKE	1:M1-39 FLR 1W - HALL BY X-RAY WAITING	X	X	X			X			ON	
	1:M1-40	PHOTO	VSMOKE	1:M1-40 FLR 1W - HALL BY X-RAY OFFICES				X		X			ON	
	1:M1-41	PHOTO	VSMOKE	1:M1-41 FLR 1W - X-RAY WAITNG RM	X			X		X			ON	
	1:M1-42	PHOTO	VSMOKE	1:M1-42 FLR 1W - X-RAY OFFICE SUITE		X		X		X			ON	
	1:M1-43	PHOTO	VSMOKE	1:M1-43 FLR 1W - X-RAY OFFICE SUITE	X	X		X		X			ON	
	1:M1-44	PHOTO	VSMOKE	1:M1-44 FLR 1W - X-RAY OFFICE SUITE			X	X		X			ON	
	1:M1-45	PHOTO	VSMOKE	1:M1-45 FLR 1W - HALL BY X-RAY OFFICES	X		X	X		X			ON	
	1:M1-46	PHOTO	VSMOKE	1:M1-46 FLR 1W - HALL BY X-RAY OFFICES		X	X	X		X			ON	
	1:M1-47	PHOTO	VSMOKE	1:M1-47 FLR 1W - HALL BY NUCLEAR MED	X	X	X	X		X			ON	
	1:M1-48	PHOTO	VSMOKE	1:M1-48 FLR 1W - HALL BY NUCLEAR MED					X	X			ON	
	1:M1-49	PHOTO	VSMOKE	1:M1-49 FLR 1W - HALL BY NUCLEAR MED	X				X	X			ON	
	1:M1-50	PHOTO	VSMOKE	1:M1-50 FLR 1W - NUCLEAR MEDICINE		X			X	X			ON	
	1:M1-51	PHOTO	VSMOKE	1:M1-51 FLR 1W - NUCLEAR MEDICINE	X	X			X	X			ON	
	1:M1-52	PHOTO	VSMOKE	1:M1-52 FLR 1W - NUCLEAR MED HOT LAB			X		X	X			ON	
	1:M1-53	PHOTO	VSMOKE	1:M1-53 FLR 1W - HALL BY NUCLEAR MED	X		X		X	X			ON	
	1:M1-54	PHOTO	VSMOKE	1:M1-54 FLR 1W - EXIT HALL BY X-RAY 4		X	X		X	X			ON	
	1:M1-55	PHOTO	VSMOKE	1:M1-55 FLR 1W - EXIT HALL BY X-RAY 3	X	X	X		X	X			ON	
	1:M1-56	PHOTO	VSMOKE	1:M1-56 FLR 1W - INTER-HALL BY X-RAY 3				X	X	X			ON	
	1:M1-57	PHOTO	VSMOKE	1:M1-57 FLR 1W - INTER-HALL BY X-RAY 3	X			X	X	X			ON	
	1:M1-58	PHOTO	VSMOKE	1:M1-58 FLR 1W - INTER-HALL BY X-RAY 3		X		X	X	X			ON	
	1:M1-59	PHOTO	VSMOKE	1:M1-59 FLR 1W - INTER-HALL BY X-RAY 4	X	X		X	X	X			ON	
	1:M1-60	PHOTO	VSMOKE	1:M1-60 FLR 1W - HALL BY CAT SCAN			X	X	X	X			ON	
	1:M1-61	PHOTO	VSMOKE	1:M1-61 FLR 1W - HALL BY CAT SCAN	X		X	X	X	X			ON	
	1:M1-62	PHOTO	VSMOKE	1:M1-62 FLR 1W - HALL BY CAT SCAN		X	X	X	X	X			ON	
3	**1:M1-63**			**SPARE**	X	X	X	X	X	X			ON	
	1:M1-64	PHOTO	VSMOKE	1:M1-64 FLR 1W - HALL BY CAT SCAN							X		ON	
	1:M1-65			SPARE	X						X		ON	
	1:M1-66			SPARE		X					X		ON	
	1:M1-67			SPARE	X	X					X		ON	
	1:M1-68			SPARE			X				X		ON	
	1:M1-69	PHOTO	VSMOKE	1:M1-69 FLR 1W - HALL BY X-RAY LOUNGE	X		X				X		ON	
	1:M1-70	PHOTO	VSMOKE	1:M1-70 FLR 1W - HALL BY INTERVENTIONAL		X	X				X		ON	
	1:M1-71	ADRPUL	PULL	1:M1-71 FL 1 CENTRL TWR MRI NRS STATION	X	X	X				X		ON	
	1:M1-72	RZAM	RELAY	1:M1-72 FL1W IDF RM M - SE HALL ACCTL ML				X			X		ON	
	1:M1-73	RZAM	RELAY	1:M1-73 1ST FL ROLL UP DOOR	X			X			X		ON	
	1:M1-74	PHOTO	VSMOKE	1:M1-74 FLR 1W - HALL BY INTERVENTIONAL		X		X			X		ON	
	1:M1-75	PHOTO	VSMOKE	1:M1-75 FLR 1W - INTERVENTIONAL X-RAY	X	X		X			X		ON	
	1:M1-76	PHOTO	VSMOKE	1:M1-76 FLR 1W - HALL BY INTERVENTIONAL			X	X			X		ON	
	1:M1-77	PHOTO	VSMOKE	1:M1-77 FLR 1W - HALL BY INTERVENTIONAL	X		X	X			X		ON	
	1:M1-78			SPARE		X	X	X			X		ON	
	1:M1-79			SPARE	X	X	X	X			X		ON	
	1:M1-80	PHOTO	VSMOKE	1:M1-80 FLR 1W - INTERVENTIONAL X-RAY					X		X		ON	
	1:M1-81	PHOTO	VSMOKE	1:M1-81 FLR 1W - INTERVENTIONAL X-RAY	X				X		X		ON	
	1:M1-82	PHOTO	VSMOKE	1:M1-82 FLR 1W - INTERVENTIONAL X-RAY		X			X		X		ON	
	1:M1-83	PHOTO	VSMOKE	1:M1-83 FLR 1W - HALL BY MRI EQUIP. RM	X	X			X		X		ON	
	1:M1-84	PHOTO	VSMOKE	1:M1-84 FLR 1W - HALL BY MRI EQUIP. RM			X		X		X		ON	
3	**1:M1-85**			**SPARE**	X		X		X		X		ON	
3	**1:M1-86**			**SPARE**		X	X		X		X		ON	
3	**1:M1-87**			**SPARE**	X	X	X		X		X		ON	
	1:M1-88			SPARE				X	X		X		ON	
	1:M1-89	PHOTO	VSMOKE	1:M1-89 FLR 1W - HALL BY MRI	X			X	X		X		ON	
	1:M1-90	PHOTO	VSMOKE	1:M1-90 FLR 1W - HALL BY MRI		X		X	X		X		ON	
	1:M1-91	PHOTO	VSMOKE	1:M1-91 FLR 1W - X-RAY - PET SCAN	X	X		X	X		X		ON	
	1:M1-92			SPARE			X	X	X		X		ON	
	1:M1-93	GENIAM	SO	1:M1-93 1ST FL PHARMACY SUPPLY TAMPER	X		X	X	X		X		ON	
	1:M1-94	GENIAM	WATER	1:M1-94 FLR 1W - BLOOD BANK FLOW		X	X	X	X		X		ON	
	1:M1-95	MBZAM	HEAT	1:M1-95 FLR 1W - MRI SCANNER ROOM	X	X	X	X	X		X		ON	
	1:M1-96	PHOTO	VSMOKE	1:M1-96 FLR 1W - MRI CONTROL RM						X	X		ON	
	1:M1-97	PHOTO	VSMOKE	1:M1-97 FLR 1W - MRI SUITE	X					X	X		ON	
	1:M1-98	PHOTO	VSMOKE	1:M1-98 FLR 1W - MRI EQUIPMENT RM		X				X	X		ON	
	1:M1-99	PHOTO	VSMOKE	1:M1-99 FLR 1W - INTERVENTIONAL X-RAY	X	X				X	X		ON	
	1:M1-100	PHOTO	VSMOKE	1:M1-100 FLR 1W - INTERVENTIONAL BAY 2			X			X	X		ON	
	1:M1-101	PHOTO	VSMOKE	1:M1-101 FLR 1W - INTERVENTIONAL BAY 1	X		X			X	X		ON	
	1:M1-102	PHOTO	VSMOKE	1:M1-102 FLR 1W - INTERVENTIONAL N.STAT.		X	X			X	X		ON	
	1:M1-103			SPARE	X	X	X			X	X		ON	
	1:M1-104			SPARE				X		X	X		ON	
	1:M1-105			SPARE	X			X		X	X		ON	
	1:M1-106	PHOTO	VSMOKE	1:M1-106 FLR 1W - ELECTRIC RM BY LAB		X		X		X	X		ON	
	1:M1-107	PHOTO	VSMOKE	1:M1-107 FLR 1 W - OR STORAGE	X	X		X		X	X		ON	
	1:M1-108			SPARE			X	X		X	X		ON	
	1:M1-109			SPARE	X		X	X		X	X		ON	
	1:M1-110			SPARE		X	X	X		X	X		ON	
	1:M1-111			SPARE	X	X	X	X		X	X		ON	
	1:M1-112			SPARE					X	X	X		ON	
	1:M1-113			SPARE	X				X	X	X		ON	
	1:M1-114			SPARE		X			X	X	X		ON	
	1:M1-115	PHOTO	VSMOKE	1:M1-115 FLR 1 RADI. 03 CHANGING AREA	X	X			X	X	X		ON	
	1:M1-116			SPARE			X		X	X	X		ON	
	1:M1-117			SPARE	X		X		X	X	X		ON	
	1:M1-118			SPARE		X	X		X	X	X		ON	
	1:M1-119			SPARE	X	X	X		X	X	X		ON	
	1:M1-120			SPARE				X	X	X	X		ON	
	1:M1-121			SPARE	X			X	X	X	X		ON	
	1:M1-122			SPARE		X		X	X	X	X		ON	
	1:M1-123			SPARE	X	X		X	X	X	X		ON	
	1:M1-124			SPARE			X	X	X	X	X		ON	
	1:M1-125			SPARE	X		X	X	X	X	X		ON	
	1:M1-126			SPARE		X	X	X	X	X	X		ON	
	1:M1-127			SPARE	X	X	X	X	X	X	X		ON	

NOTE: THE LABELS SHOWN ABOVE WILL BE USED FOR PROGRAMMING PURPOSES.
THE LABELS ARE BASED UPON INFORMATION SHOWN ON THE ARCHITECTURAL DRAWINGS.
ANY CHANGES TO THESE LABELS MUST BE NOTED ON THE SUBMITTAL REVIEW, PRIOR TO PROGRAMMING.
POINTS SHOWN IN ITALIC TEXT REFER TO EXISTING DEVICES.

MEDICAL CENTER OF AURORA SOUTH TOWER NODE 1 FACP 4100es FACP VOLTAGE DROPS

WIRE RESISTANCE BASED ON TABLE 8 FROM NATIONAL ELECTRICAL CODE (UNCOATED SOLID COPPER WIRE) @ 50 Celsius

Keynote	NOTIFICATION CIRCUIT DESCRIPTION	Power Supply	Panel Circuit	Plan Ckt.	Dist. (D) Feet	Wire Gauge	Wire Res. / Ft. (R)	Total Alarm (A)	V. Drop (A*2D*R)	Volt @ End	% Volt Drop	Min Device Voltage	Max Distance	4903-9219	4903-9292	4904-9137	CH70-24MCW-FR	RSS-24MCW-FR	4906-9101	4906-9101	4009-9001	Circuit Capacity (Amps)	Minimum Voltage @ NAC Output Terminals	Spare Circuit / Branch Capacity	Device Quantity Per Circuit/ Branch
													Setting	15cd	15cd	15cd	15cd	15cd	15cd	75cd					
													Device Type	A/V	C/V	V/O	MC A/V	MC V/O	MC V/O	MC V/O					
													Supv. Current	0.0000	0.0000	0.0000	0.0000	0.0000	0.0000	0.0000	0.0000				
													Alarm Current	0.1330	0.0700	0.0900	0.0820	0.0600	0.0600	0.1860	0.0150				
	1ST FLOOR EAST CHIMES/STROBES N1:SIG3	PS-1	SIG3	1:SIG3	500	14ga	0.0028	0.450	1.270	18.230	6.51%	16vdc	1378 Ft.			5						3.A	19.5	63.7%	5
	RADIOLOGY/SURGERY HALLS N1:SIG4	PS-1	SIG4	1:SIG4	500	14ga	0.0028	0.450	1.270	18.230	6.51%	16vdc	1378 Ft.			5						3.A	19.5	63.7%	5
	2ND FLOOR CHIMES/STROBES N1:SIG5	PS-1	SIG5	1:SIG5	600	14ga	0.0028	0.450	1.524	17.976	7.82%	16vdc	1378 Ft.			5						3.A	19.5	56.5%	5
	3RD FLOOR CHIMES/STROBES N1:SIG6	PS-1	SIG6	1:SIG6	700	14ga	0.0028	0.450	1.778	17.722	9.12%	16vdc	1378 Ft.			5						3.A	19.5	49.2%	5
	4TH FLOOR CHIMES/STROBES N1:SIG7	PS-1	SIG7	1:SIG7	800	14ga	0.0028	0.450	2.032	17.468	10.42%	16vdc	1378 Ft.			5						3.A	19.5	41.9%	5
	5TH FLOOR CHIMES/STROBES N1:SIG8	PS-1	SIG8	1:SIG8	900	14ga	0.0028	0.450	2.286	17.214	11.72%	16vdc	1378 Ft.			5						3.A	19.5	34.7%	5
	SURGERY CHIMES/STROBES N1:SIG9	PS-1	SIG9	1:SIG9	500	14ga	0.0028	0.450	1.270	18.230	6.51%	16vdc	1378 Ft.			5						3.A	19.5	63.7%	5
	LAB HALL CHIMES/STROBES N1:SIG10	PS-1	SIG10	1:SIG10	500	14ga	0.0028	0.450	1.270	18.230	6.51%	16vdc	1378 Ft.			5						3.A	19.5	63.7%	5
	CENT SPLY/MATERIALS MGMT N1:SIG11	PS-1	SIG11	1:SIG11	500	14ga	0.0028	0.450	1.270	18.230	6.51%	16vdc	1378 Ft.			5						3.A	19.5	63.7%	5
	EMERGENCY ROOM STROBES N1:SIG12	PS-1	SIG12	1:SIG12	500	14ga	0.0028	0.450	1.270	18.230	6.51%	16vdc	1378 Ft.			5						3.A	19.5	63.7%	5
	EMERGENCY RM HALL STROBES N1:SIG13	PS-1	SIG13	1:SIG13	500	14ga	0.0028	0.450	1.270	18.230	6.51%	16vdc	1378 Ft.			5						3.A	19.5	63.7%	5
	1ST FLOOR CENTRAL STROBES N1:SIG14	PS-1	SIG14	1:SIG14	500	14ga	0.0028	0.450	1.270	18.230	6.51%	16vdc	1378 Ft.			5						3.A	19.5	63.7%	5
	N1:SIG15 CENT SPLY/MATERIAL CHIME	PS-1	SIG15	1:SIG15	500	14ga	0.0028	0.350	0.988	18.512	5.07%	16vdc	1772 Ft.		5							3.A	19.5	71.8%	5
	N1:SIG16 EMERGENCY ROOM CHIMES	PS-1	SIG16	1:SIG16	500	14ga	0.0028	0.350	0.988	18.512	5.07%	16vdc	1772 Ft.		5							3.A	19.5	71.8%	5
	N1:SIG17 EMERGENCY RM HALL CHIMES	PS-1	SIG17	1:SIG17	500	14ga	0.0028	0.350	0.988	18.512	5.07%	16vdc	1772 Ft.		5							3.A	19.5	71.8%	5
	N1:SIG18 1ST FLOOR CENTRAL CHIMES	PS-2	SIG18	1:SIG18	500	14ga	0.0028	0.350	0.988	18.512	5.07%	16vdc	1772 Ft.		5							3.A	19.5	71.8%	5
	N1:SIG19 CHIMES C6-1	PS-2	SIG19	1:SIG19	1000	14ga	0.0028	0.350	1.975	17.525	10.13%	16vdc	1772 Ft.		5							3.A	19.5	43.6%	5
3	**N1:SIG20 CHIMES C5-1, S6-5, S6-6**	**PS-2**	**SIG20**	**1:SIG20**	**827**	**14ga**	**0.0028**	**0.500**	**2.334**	**17.166**	**11.97%**	**16vdc**	**1240 Ft.**		**2**	4						**3.A**	**19.5**	**33.3%**	**6**
	N1:SIG21 STROBES S6-1	PS-2	SIG21	1:SIG21	1000	14ga	0.0028	0.450	2.540	16.960	13.03%	16vdc	1378 Ft.			5						3.A	19.5	27.4%	5
	N1:SIG22 STROBES S6-2	PS-2	SIG22	1:SIG22	100	14ga	0.0028	0.450	0.254	19.246	1.30%	16vdc	1378 Ft.			5						3.A	19.5	85.0%	5
	N1:SIG23 CHIMES C3,4-1	PS-2	SIG23	1:SIG23	700	14ga	0.0028	0.372	1.470	18.030	7.54%	16vdc	1667 Ft.							2		3.A	19.5	58.0%	2
	N1:SIG24 STROBES S3-1	PS-2	SIG24	1:SIG24	700	14ga	0.0028	0.360	1.422	18.078	7.29%	16vdc	1723 Ft.			4						3.A	19.5	59.4%	4
	N1:SIG25 STROBES S3-2	PS-2	SIG25	1:SIG25	700	14ga	0.0028	0.760	3.003	16.497	15.40%	16vdc	816 Ft.		7	3						3.A	19.5	14.2%	10
	N1:SIG26 CHIME C2-1	PS-2	SIG26	1:SIG26	600	14ga	0.0028	0.700	2.371	17.129	12.16%	16vdc	886 Ft.		10							3.A	19.5	32.3%	10
	N1:SIG27 SPARE	PS-2	SIG27	1:SIG27		14ga	0.0028	0.000	0.000	19.500	0.00%	16vdc	0 Ft.									3.A	19.5	100.0%	0
	N1:SIG28 STROBES SP6-2	PS-2	SIG28	1:SIG28	600	14ga	0.0028	0.450	1.524	17.976	7.82%	16vdc	1378 Ft.			5						3.A	19.5	56.5%	5
	N1:SIG29 4009 SP6-2,S2-4,1ST CENT ELEV#6	PS-2	SIG29	1:SIG29	350	14ga	0.0028	0.015	0.030	19.470	0.15%	16vdc	41340 Ft.								1	3.A	19.5	99.2%	1
	N1:SIG30 STROBES 4009A SOUTH PHARMACY	PS-2	SIG30	1:SIG30	350	14ga	0.0028	0.015	0.030	19.470	0.15%	16vdc	41340 Ft.								1	3.A	19.5	99.2%	1
	N1:SIG31 SPARE S5-2	PS-2	SIG31	1:SIG31		14ga	0.0028	0.000	0.000	19.500	0.00%	16vdc	0 Ft.									3.A	19.5	100.0%	0
	N1:SIG32 ELECTRICAL 1E-4902B STROBE	PS-2	SIG32	1:SIG32	350	14ga	0.0028	0.060	0.119	19.381	0.61%	16vdc	10335 Ft.						1			3.A	19.5	96.6%	1
	N1:SIG33 STROBE S6-3	PS-2	SIG33	1:SIG33	1000	14ga	0.0028	0.180	1.016	18.484	5.21%	16vdc	3445 Ft.			2						3.A	19.5	71.0%	2
	N1:SIG34 STROBE S6-4	PS-2	SIG34	1:SIG34	1000	14ga	0.0028	0.090	0.508	18.992	2.61%	16vdc	6890 Ft.			1						3.A	19.5	85.5%	1
	N1:SIG35 STROBE S2-3	PS-2	SIG35	1:SIG35	600	14ga	0.0028	0.910	3.082	16.418	15.80%	16vdc	681 Ft.		4	7						3.A	19.5	11.9%	11
	N1:SIG36 STROBE S2-1	PS-3	SIG36	1:SIG36	600	14ga	0.0028	0.690	2.337	17.163	11.98%	16vdc	899 Ft.		6	3						3.A	19.5	33.2%	9
	N1:SIG37 STROBE S2-2	PS-3	SIG37	1:SIG37	533	14ga	0.0028	1.070	3.219	16.281	16.51%	16vdc	580 Ft.		5	8						3.A	19.5	8.0%	13
	N1:SIG38 SPARE	PS-3	SIG38	1:SIG38		14ga	0.0028	0.000	0.000	19.500	0.00%	16vdc	0 Ft.									3.A	19.5	100.0%	0
	N1:SIG39 STROBE OUTSIDE SIAMESE	PS-3	SIG39	1:SIG39	1000	14ga	0.0028	0.060	0.339	19.161	1.74%	16vdc	10335 Ft.					1				3.A	19.5	90.3%	1
	N1:SIG40 HORN OUTSIDE SIAMESE	PS-3	SIG40	1:SIG40	1000	14ga	0.0028	0.254	1.434	18.066	7.35%	16vdc	2441 Ft.			1	2					3.A	19.5	59.0%	3
	N1:SIG41 SPARE	PS-3	SIG41	1:SIG41		14ga	0.0028	0.000	0.000	19.500	0.00%	16vdc	0 Ft.									3.A	19.5	100.0%	0
	N1:SIG42 CHIME 1ST FLOOR CENTRAL	PS-3	SIG42	1:SIG42	500	14ga	0.0028	0.360	1.016	18.484	5.21%	16vdc	1723 Ft.			4						3.A	19.5	71.0%	4
	N1:SIG43 BASEMENT EVS DEPT STROBE CKT	PS-3	SIG43	1:SIG43	600	14ga	0.0028	0.090	0.305	19.195	1.56%	16vdc	6890 Ft.			1						3.A	19.5	91.3%	1
	N1:SIG44 SPARE	PS-3	SIG44	1:SIG44		14ga	0.0028	0.000	0.000	19.500	0.00%	16vdc	0 Ft.									3.A	19.5	100.0%	0
	N1:SIG45 BASEMENT	PS-3	SIG45	1:SIG45	600	14ga	0.0028	0.712	2.411	17.089	12.37%	16vdc	871 Ft.		9		1					3.A	19.5	31.1%	10
	N1:SIG46 STROBES MATERIAL MANAGEMENT	PS-3	SIG46	1:SIG46	600	14ga	0.0028	0.372	1.260	18.240	6.46%	16vdc	1667 Ft.							2		3.A	19.5	64.0%	2
	N1:SIG47 BASEMENT CORRIDOR	PS-3	SIG47	1:SIG47	488	14ga	0.0028	0.982	2.705	16.795	13.87%	16vdc	631 Ft.		9	3	1					3.A	19.5	22.7%	13
	N1:SIG48 SPARE	PS-3	SIG48	1:SIG48		14ga	0.0028	0.000	0.000	19.500	0.00%	16vdc	0 Ft.									3.A	19.5	100.0%	0
	N1:SIG49 S9-1 BLOOD W.& SURG DOC OFFICES	PS-3	SIG49	1:SIG49	900	14ga	0.0028	0.266	1.351	18.149	6.93%	16vdc	2331 Ft.	2								3.A	19.5	61.4%	2
	N1:SIG50 S9-2 BLOOD LAB EAST	PS-3	SIG50	1:SIG50	900	14ga	0.0028	0.266	1.351	18.149	6.93%	16vdc	2331 Ft.	2								3.A	19.5	61.4%	2
	N1:SIG51 ADMITING SOUTH	PS-3	SIG51	1:SIG51	1000	14ga	0.0028	0.266	1.501	17.999	7.70%	16vdc	2331 Ft.	2								3.A	19.5	57.1%	2
	N1:SIG52 ADMITING NORTH	PS-3	SIG52	1:SIG52	1000	14ga	0.0028	0.133	0.751	18.749	3.85%	16vdc	4662 Ft.	1								3.A	19.5	78.5%	1
	N1:SIG53 ADMITING CHIME	PS-3	SIG53	1:SIG53	1000	14ga	0.0028	0.133	0.751	18.749	3.85%	16vdc	4662 Ft.	1								3.A	19.5	78.5%	1
	N1:SIG54 SPARE	PS-3	SIG54	1:SIG54		14ga	0.0028	0.000	0.000	19.500	0.00%	16vdc	0 Ft.									3.A	19.5	100.0%	0
	N1:SIG55 C7-9-1 BLOOD LAB SURGERY PREP	PS-3	SIG55	1:SIG55	1000	14ga	0.0028	0.133	0.751	18.749	3.85%	16vdc	4662 Ft.	1								3.A	19.5	78.5%	1
	N1:SIG56 SPARE	PS-3	SIG56	1:SIG56		14ga	0.0028	0.000	0.000	19.500	0.00%	16vdc	0 Ft.									3.A	19.5	100.0%	0
	N1:SIG57 S1,3 KITCHEN AND SLEEP ROOMS	PS-3	SIG57	1:SIG57	900	14ga	0.0028	0.133	0.676	18.824	3.46%	16vdc	4662 Ft.	1								3.A	19.5	80.7%	1
	N1:SIG58 S1,4 GIFT SHOP & ELEVATOR AREA	PS-3	SIG58	1:SIG58	900	14ga	0.0028	0.350	1.778	17.722	9.12%	16vdc	1772 Ft.		5							3.A	19.5	49.2%	5
	N1:SIG59 S8,3 SURGERY PREP AND HOLDING	PS-3	SIG59	1:SIG59	900	14ga	0.0028	0.350	1.778	17.722	9.12%	16vdc	1772 Ft.		5							3.A	19.5	49.2%	5
	N1:SIG60 S7,1 SURGERY PREP	PS-3	SIG60	1:SIG60	900	14ga	0.0028	0.350	1.778	17.722	9.12%	16vdc	1772 Ft.		5							3.A	19.5	49.2%	5
	N1:SIG61 S7,2 SURGERY PREP	PS-3	SIG61	1:SIG61	900	14ga	0.0028	0.140	0.711	18.789	3.65%	16vdc	4429 Ft.		2							3.A	19.5	79.7%	2
	N1:SIG62 SPARE	PS-3	SIG62	1:SIG62		14ga	0.0028	0.000	0.000	19.500	0.00%	16vdc	0 Ft.									3.A	19.5	100.0%	0
	N1:SIG101 1ST FLR ATS AREA STROBE 67-1	XPS-1	SIG63	1:SIG63	1000	14ga	0.0028	0.186	1.050	18.450	5.38%	16vdc	3334 Ft.							1		3.A	19.5	70.0%	1
	N1:SIG102 SPARE	XPS-1	SIG64	1:SIG64		14ga	0.0028	0.000	0.000	19.500	0.00%	16vdc	0 Ft.									3.A	19.5	100.0%	0
	N1:SIG103 SPARE	XPS-1	SIG65	1:SIG65		14ga	0.0028	0.000	0.000	19.500	0.00%	16vdc	0 Ft.									3.A	19.5	100.0%	0
	N1:SIG107 SPARE	XPS-2	SIG66	1:SIG66		14ga	0.0028	0.000	0.000	19.500	0.00%	16vdc	0 Ft.									3.A	19.5	100.0%	0
	N1:SIG108 SPARE	XPS-2	SIG67	1:SIG67		14ga	0.0028	0.000	0.000	19.500	0.00%	16vdc	0 Ft.									3.A	19.5	100.0%	0
	N1:SIG109 SPARE	XPS-2	SIG68	1:SIG68		14ga	0.0028	0.000	0.000	19.500	0.00%	16vdc	0 Ft.									3.A	19.5	100.0%	0

NOTE:
LUMP SUM METHOD WAS USED TO CALCULATE ALLOWABLE VOLTAGE DROP. THIS METHOD ALLOWS FOR A SMALL MARGIN OF SAFETY, TAKING INTO CONSIDERATION THAT THE ACTUAL INSTALLED CIRCUIT ROUTING MAY DIFFER FROM WHAT IS SHOWN ON THE SHOP DRAWINGS. IF THE ACTUAL CIRCUIT LENGTH IS GOING TO EXCEED THE MAXIMUM ALLOWABLE CIRCUIT LENGTH, CONTACT YOUR LOCAL JOHNSON CONTROLS DISTRICT OFFICE.

GENERAL NOTES:

1. THE INFORMATION OR SYMBOLS SHOWN IN BOLD LINETYPE ARE NEW OR RELOCATED.
2. THE INFORMATION OR SYMBOLS SHOWN IN LIGHT LINETYPE ARE EXISTING TO REMAIN.

KEYNOTES:

1. DEVICE REMOVED FOR CONSTRUCTION.
2. DEVICE IS INTERIM FOR CONSTRUCTION. TO BE REPLACED OR REMOVED DURING BUILDOUT.
3. DEVICE WAS INTERIM FOR CONSTRUCTION AND IS NOW REMOVED.
4. EXISTING DEVICE REINSTALLED. RE-USE EXISTING HEAD, BASE, ADDRESS, LOCATION, AND WIRING.

City of Aurora Building Division
Reviewed for Code Compliance
Approved as Noted: W. Polk
Date: Sep 07, 2022
2015 INTERNATIONAL CODES & 2020 NEC

Johnson Controls
DISTRICT - 419
14200 E. EXPOSITION AVE
AURORA, CO 80012
SERVICE: 303-355-0500
PHONE: 303-355-0500
FAX: 303-355-0615

NICET CERTIFICATION INFORMATION
NANCY S. WILTSIE
NICET Fire Alarm, III
Certification #93727
Valid Through: 03/01/24
September 7, 2022

THE MEDICAL CENTER OF AURORA - SOUTH CAMPUS CT 1 AND RAD ROOM 5

THE MEDICAL CENTER OF AURORA
1501 SOUTH POTOMAC STREET
AURORA, COLORADO 80012

ISSUE LOG: Revisions shown with symbol

MARK	DATE	CAD	CHK	DESCRIPTION
1	08/29/2022	CBR	NSW	CHANGES PER CUSTOMER REQUEST DATED 08/25/2022.
2	09/07/2022	CBR	NSW	CHANGES PER FIRE DEPARTMENT REVIEW DATED 09/03/2022.

FOR PERMIT

DRAWN BY:	CBR
CHECKED BY:	NSW
ISSUE DATE:	7/5/22
JOB #:	
PROJECT #:	419:650184053

JOHNSON CONTROLS © 2022

SYSTEM: **FIRE ALARM SYSTEM**

SHEET: **NODE-1 FIRE ALARM CONTROL PANEL BUILDOUT CALCS & SCHEDULES**

FA-603

FILE PATH: c:\Users\jrauchc\johnson controls\project electronics - medical center of aurora\1501 s potomac - aurora south\south tower - node 1\32-ct1 & radrm5 - 2022 - 650184053\Fire\FA-601.dwg
LAST SAVED BY: JRAUCHC
LAST PRINTED: 9/7/2022 12:49:57 PM
30" x 42" - Arch E1 Size

© Johnson Controls 2022. All rights reserved. Reuse, copying, modification or alteration of the drawings and other information contained herein is strictly prohibited.

RSN: 1654836
Permit # 2022-2207219 -LT
Sheet 11 of 36

⚠ MEDICAL CENTER OF AURORA SOUTH TOWER TRANSPONDER 4 4100es XPOR

	Module	Qty	Description	Standby Current	Total Standby	Alarm Current	Total Alarm
	Panel Equipment						
	4100-9400	1	BASIC TRANSPONDER	0.0870	0.0870	0.0870	0.0870
	4100-0534	1	POWER DISTRIBUTION MODULE 120V	0.0000	0.0000	0.0000	0.0000
	4100-0636	1	BOX TO BOX HARNESS KIT	0.0000	0.0000	0.0000	0.0000
	4100-2300	1	EXPANSION BAY (PHASE 10 ONLY)	0.0000	0.0000	0.0000	0.0000
	4100-5311	1	ENHANCED POWER SUPPLY, 3 CHANNELS, IDNet, 120V	0.2250	0.2250	0.4900	0.4900
	4009-9601	2	IDNAC REPEATER 120V PLATINUM UL/ULC	0.0700	0.1400	0.0980	0.1920
			Panel Totals		**0.4520**		**0.7690**
	IDNet Addressable Devices (SLC)						
	4090-9001	3	IDNET SUPERVISED I/AM	"			
	4090-9003	34	IDNET RELAY I/AM	"			
3	**4098-9714**	**95**	**TRUEALARM PHOTO SMOKE SENSOR**				
3	**4098-9733**	**9**	**TRUEALARM HEAT SENSOR**	*			
	4098-9755	2	TRUEALARM DUCT SMOKE SENSOR W/O RELAY OUTPUT	"			
	4098-9756	11	TRUEALARM DUCT SMOKE SENSOR W/ RELAY OUTPUT	"			
	4098-9792	**104**	**TRUEALARM SENSOR BASE**	*			
	4099-9004	4	ADDRESSABLE SINGLE ACTION MANUAL STATION	"			
	Miscellaneous Peripheral Devices That Require (Additional) System Power						
	4098-9843	11	ENCAPSULATED RELAY PAM-SD	0.0000	0.0000	0.0150	0.1650
	4098-9756	11	TRUEALARM DUCT SMOKE SENSOR W/ RELAY OUTPUT	0.0030	0.0330	0.0150	0.1650
	4603-9101	4	SERIAL LCD ANNUNCIATOR	0.0650	0.2600	0.1400	0.5600
	2088-9021	5	ENCAPSULATED RELAY PAM-1	0.0000	0.0000	0.0150	0.0750
	4098-9605	2	PHOTO SMOKE DETECTOR SSD	0.0001	0.0002	0.0000	0.0000
	4098-9788	2	2 WIRE DETECTOR BASE	0.0000	0.0000	0.0000	0.0000
	2098-9806	12	REMOTE TEST STATION W/ LED AND KEY SWITCH	0.0000	0.0000	0.0000	0.0000
	IDNac Notification Appliances		**Setting**				
	4009-9601	2	IDNAC REPEATER 120V PLATINUM UL/ULC	*	0.0032	0.0064	0.0032	0.0064
	4906-9202	6	ADDRESSABLE CEILING MNT MC V/O, RED	15	0.0008	0.0048	0.0600	0.3600
	4906-9302	1	ADDRESSABLE CEILING MNT MC V/O, RED	75	0.0008	0.0008	0.1800	0.1800
	49MT-WRF	2	MULTI-TONE AUDIBLE ONLY, RED, WALL MOUNT	320 Hi	0.0016	0.0032	0.0990	0.1980
	49MTV-WRF	16	MULTI-TONE A/V, RED, WALL MOUNT	15	0.0016	0.0256	0.1450	2.3200
	49MTV-WRF	11	MULTI-TONE A/V, RED, WALL MOUNT	30	0.0016	0.0176	0.1630	1.7930
	49MTV-WRF	6	MULTI-TONE A/V, RED, WALL MOUNT	75	0.0016	0.0096	0.1980	1.1880
	49VO-APPLC	**9**	**STROBE, APPLIANCE ONLY, CEILING MOUNT**	**15**	**0.0008**	**0.0072**	**0.0550**	**0.4950**
	49VO-APPLC	2	STROBE, APPLIANCE ONLY, CEILING MOUNT	30	0.0008	0.0016	0.0830	0.1660
	49VO-APPLW	1	VO APPLIANCE ONLY WALL MT	15	0.0008	0.0008	0.0470	0.0470
	49VO-APPLW	4	VO APPLIANCE ONLY WALL MT	30	0.0008	0.0032	0.0570	0.2280
	49VO-APPLW	1	VO APPLIANCE ONLY WALL MT	75	0.0008	0.0008	0.1000	0.1000
	49VO-WRF	**31**	**VO, WALL MT, RED, FIRE LABEL**	**15**	**0.0008**	**0.0248**	**0.0470**	**1.4570**
	49VO-WRF	**6**	**VO, WALL MT, RED, FIRE LABEL**	**30**	**0.0008**	**0.0048**	**0.0570**	**0.3420**
	49VO-WRF	1	VO, WALL MT, RED, FIRE LABEL	75	0.0008	0.0008	0.1000	0.1000
			Total IDNac Device Current:		**0.1120**			**8.9804**
			IDNac Current Boost for 29vdc Regulated Output **					**5.1199**
			Peripheral Totals		**0.2932**			**15.0653**
			RUI Totals	**4**	**0.0140**			**0.0140**
			Address Totals	**158 Addresses**	**0.1264**			**0.1580**
			System Totals*:	**Standby**	**0.9976**		**Alarm**	**16.0063**

* Device Address current draw included below (See Additional Current Draws):

Constant current draw of .9mA standby and 1mA alarm per address used. Devices requiring additional current are accounted for in the section labeled "Miscellaneous Peripheral Devices Requiring Additional System Power".

Battery Set #1 (Cabinet/Charger #1)			Standby Current	Standby Total	Alarm Current	Alarm Total
Select ALL Power Supplies on this battery set:						
EPS-1				0.6764		7.1374
				Sub Total		**7.1374**
Additional Current Draws:						
IDNac Current Boost for 29vdc Regulated Output **						3.1900
RUI Connected Peripheral Devices	4	x 0.0035		= 0.0140	x 0.0035	= 0.0140
MAPNET/IDNet Device Address Communication Current	158	x 0.000800		= 0.1264	x 0.001000	= 0.1580
				Sub Total		**10.4994**
Spare addressable point capacity **20%**	32	x 0.0008		= 0.0256	x 0.001	= 0.0320
				Total		**10.5314**
Standby Time = 4 Hrs		x 0.8424		= 3.3696	Standby Ah	
Alarm Time = 5 Min		0.08333 x 10.5314		= 0.8776	Alarm Ah	
				4.2472		
Additional Spare Battery Capacity = **20%**			+	0.8494		
				5.0967		
Battery Discharge Factor = **20%**			+	1.0193		
Minimum Battery Required **2081-9272 6.2AH (2x)**				**6.1160**		
Battery Supplied **2081-9287 25AH (2x)**						

* System Totals represent total system current requirements. Those currents may be distributed between multiple battery sets or power supplies as shown above.

** IDNac Current Boost formula: ((29.5 * IDNac Alarm Current) / .92) / 20.4 = Adjusted Current
DC-DC Converter Output = 29.5vdc. Terminal Output is 29vdc due to 0.5vdc internal loss.
Converter Worst Case efficiency is 92%, 20.4vdc represents battery output in 85% depleted state

Repeater Power Supply Battery Set:			Standby Total	Alarm Total
EPR-1			0.0836	**1.2240**
Additional Current Draw:				
IDNac Current Boost for 29vdc Regulated Output **			0.0000	0.6431
			Total **0.0836**	**1.8671**
Standby Time = 4 Hrs		x 0.8424	= 0.3344	Standby Ah
Alarm Time = 5 Min		0.08333 x 1.8671	= 0.1556	Alarm Ah
			0.4900	
Additional Spare Battery Capacity = **20%**		+	0.0980	
			0.5880	
Battery Discharge Factor = **20%**		+	0.1176	
Minimum Battery Required **2081-9272 6.2AH (2x)**			**0.7056**	
Battery Supplied **2081-9272 6.2AH (2x)**				

Repeater Power Supply Battery Set:			Standby Total	Alarm Total
EPR-2			0.0972	**2.3539**
Additional Current Draw:				
IDNac Current Boost for 29vdc Regulated Output **			0.0000	1.2868
			Total **0.0972**	**3.6398**
Standby Time = 4 Hrs		x 0.8424	= 0.3888	Standby Ah
Alarm Time = 5 Min		0.08333 x 3.6398	= 0.3033	Alarm Ah
			0.6921	
Additional Spare Battery Capacity = **20%**		+	0.1384	
			0.8305	
Additional Spare Battery Capacity = **20%**		+	0.1661	
Minimum Battery Required **2081-9272 6.2AH (2x)**			**0.9966**	
Battery Supplied **2081-9272 6.2AH (2x)**				

IDNET CHANNEL N1:T4-M11 — ADDRESSES IN USE: 153 (61.2%) | SPARE ADDRESSES: 97 (38.8%)

	Address	Device Type	Point Type	Location Description	SWITCH SETTINGS 1 2 3 4 5 6 7 8	
	N1:T4-M11-1	PHOTO	SMOKE	1-M11-1 FLR 1W ELEC 1-CS16	X	ON
	N1:T4-M11-2	PHOTO	SMOKE	1-M11-2 FLR 1W OR-11 1-SS10 SW	X	ON
	N1:T4-M11-3	PHOTO	SMOKE	1-M11-3 FLR 1W OR-11 1-SS10 NE	X X	ON
	N1:T4-M11-4	RIAM	DHOLDER	1-M11-4 FLR 1W OR-11 1-SS100	X	ON
	N1:T4-M11-5	HEAT	HEAT	1-M11-5 FLR 1W TOILET CS15	X X	ON
	N1:T4-M11-6	PHOTO	VSMOKE	1-M11-6 FLR 1W CORR 1-CS14	X	ON
	N1:T4-M11-7	PHOTO	VSMOKE	1-M11-7 FLR 1W CORR 1-CS14	X X X	ON
	N1:T4-M11-8	PHOTO	SMOKE	1-M11-8 FLR 1W STER STG 1-CS10 NORTH	X	ON
	N1:T4-M11-9	PHOTO	SMOKE	1-M11-9 FLR 1W STER STG 1-CS10	X	ON
	N1:T4-M11-10	PHOTO	SMOKE	1-M11-10 FLR 1W JANT-CS13	X	ON
	N1:T4-M11-11	PHOTO	VSMOKE	1-M11-11 FLR 1W JAN 1-SS038	X X	ON
	N1:T4-M11-12	PHOTO	SMOKE	1-M11-12 FLR 1W STER STG 1-CS10 CTR	X	ON
	N1:T4-M11-13	PHOTO	SMOKE	1-M11-13 FLR 1W CENTRAL STERILE	X X	ON
	N1:T4-M11-14	PHOTO	SMOKE	1-M11-14 FLR 1W STER STG 1-CS10 SOUTH	X	ON
	N1:T4-M11-15	PHOTO	SMOKE	1-M11-15 FLR 1W STER STG 1-CS10 SOUTH	X X X	ON
	N1:T4-M11-16	PHOTO	SMOKE	1-M11-16 FLR 1W MAKE UP 1-CS07 W	X	ON
	N1:T4-M11-17	PHOTO	SMOKE	1-M11-17 FL 1W CENTRAL STERILE	X	ON
	N1:T4-M11-18	PHOTO	SMOKE	1-M11-18 FL 1W MAKE UP 1-CS07 @ CORR	X	ON
	N1:T4-M11-19	PHOTO	SMOKE	1-M11-19 FL 1W STERILIZER 1-CS08	X X	ON
	N1:T4-M11-20	PHOTO	SMOKE	1-M11-20 FL 1W CLEAN STORAGE 1-CS06	X	ON
	N1:T4-M11-21	PHOTO	SMOKE	1-M11-21 FL 1W DECON 1-CS03 NORTH	X X	ON
	N1:T4-M11-22	PHOTO	SMOKE	1-M11-22 FL 1W DECON 1-CS03 SOUTH	X X	ON
	N1:T4-M11-23	PHOTO	SMOKE	1-M11-23 FL 1W CART WASH 1-CS04 NORTH	X X X	ON
	N1:T4-M11-24	PHOTO	SMOKE	1-M11-24 FL 1W CART WASH 1-CS04 SOUTH	X	ON
	N1:T4-M11-25	PHOTO	SMOKE	1-M11-25 FL 1W CSS OFF 1-CS02	X X	ON
	N1:T4-M11-26	PHOTO	SMOKE	1-M11-26 FL 1W DI WATER 1-CS09	X X	ON
	N1:T4-M11-27	PHOTO	SMOKE	1-M11-27 FL 1W SURGERY VENDOR 1-CS01	X X X	ON
	N1:T4-M11-28	PHOTO	SMOKE	1-M11-28 FL 1W CLEAN STORAGE 1-CS05	X X	ON
	N1:T4-M11-29			SPARE	X X X	ON
	N1:T4-M11-30	RPHOTO	LSDUCT	1-M11-30 FLR 1W STER STG SUP FSD 1-CS10	X X X	ON
	N1:T4-M11-31	RPHOTO	LSDUCT	1-M11-31 FLR 1W CARTWASH 1-CS04 RET FSD	X X X X	ON
	N1:T4-M11-32	RPHOTO	LSDUCT	1-M11-32 FLR 1W CSS OFF 1-CS02 RET FSD	X	ON
	N1:T4-M11-33	RPHOTO	LSDUCT	1-M11-33 FLR 1W SRG VEND 1-CS01 RET FSD	X	ON
	N1:T4-M11-34			SPARE	X	ON
	N1:T4-M11-35	RPHOTO	LSDUCT	1-M11-35 FLR 1W DECON 1- CS03 SUP FSP	X X	ON
	N1:T4-M11-36			SPARE	X	ON
	N1:T4-M11-37			SPARE	X X	ON
	N1:T4-M11-38			SPARE	X X	ON
	N1:T4-M11-39	RIAM	RELAY	1-M11-39 FLR 1W OR 811 ALARM TO DCC	X X X	ON
	N1:T4-M11-40	RIAM	RELAY	1-M11-40 FLR 1W OR 63 ALARM TO DDC	X	ON
	N1:T4-M11-41	RPHOTO	LSDUCT	1-M11-41 FLR 1W ELEC RM 1-CS16 SUP FSD	X X	ON
	N1:T4-M11-42	RPHOTO	LSDUCT	1-M11-42 FLR 1W ELEC RM 1-CS16 RET FSD	X	ON
	N1:T4-M11-43	RPHOTO	LSDUCT	1-M11-43 FLR 1W TLT 1-CS15 SUP FSD	X X X	ON
	N1:T4-M11-44	RPHOTO	LSDUCT	1-M11-44 FLR 1W OR-11 1-SS100 RET FSD	X	ON
	N1:T4-M11-45	PHOTO	VSMOKE	1-M11-45 FLR 1W OR-1 1-SS119 NE	X X X	ON
	N1:T4-M11-46	PHOTO	VSMOKE	1-M11-46 FLR 1W OR-1 1-SS119 SW	X X X	ON
	N1:T4-M11-47	RIAM	DHOLDER	1-M11-47 FLR 1W OR-1 1-SS119 DH	X X X	ON
	N1:T4-M11-48	PHOTO	VSMOKE	1-M11-48 FLR 1W OR-2 1-SS119 NE	X	ON
	N1:T4-M11-49	PHOTO	VSMOKE	1-M11-49 FLR 1W OR-2 1-SS119 SW	X X X	ON
	N1:T4-M11-50	RIAM	DHOLDER	1-M11-50 FLR 1W OR-2 1-SS119 DH	X	ON
	N1:T4-M11-51	PHOTO	VSMOKE	1-M11-51 FLR 1W CYSTO OR-3 1-SS129 NE	X X X	ON
	N1:T4-M11-52	PHOTO	VSMOKE	1-M11-52 FLR 1W CYSTO OR-3 1-SS129 SW	X	ON
	N1:T4-M11-53	RIAM	DHOLDER	1-M11-53 FLR 1W CYSTO OR-3 1-SS129 DH	X X X	ON
	N1:T4-M11-54	PHOTO	VSMOKE	1-M11-54 FLR 1W EQUIP STG 1-SS131	X X X	ON
	N1:T4-M11-55	PHOTO	VSMOKE	1-M11-55 FLR 1W WOMENS LOCKER 1-SS135	X X X X	ON
	N1:T4-M11-56	HEAT	HEAT	1-M11-56 FLR 1W WOMENS BATH 1-SS136	X X	ON
	N1:T4-M11-57	PHOTO	VSMOKE	1-M11-57 FLR 1W MENS LOCKER 1-SS138	X X X	ON
	N1:T4-M11-58	PHOTO	VSMOKE	1-M11-58 FLR 1W NURSE LOUNGE 1-SS139	X X X	ON
	N1:T4-M11-59			SPARE	X X X X	ON
	N1:T4-M11-60			SPARE	X X X X	ON
	N1:T4-M11-61			SPARE	X X X X	ON
	N1:T4-M11-62	RPHOTO	LSDUCT	1-M11-62 FLR 1W OR-11 1-SS100 SUP FSD	X X X X X	ON
	N1:T4-M11-63	RPHOTO	LSDUCT	1-M11-63 FLR 1W CORR 1-SS112 SUP FSD	X X X X X X	ON
	N1:T4-M11-64			SPARE	X	ON
	N1:T4-M11-65	RIAM	RELAY	1-M11-65 FLR 1W OR-1 PHOENIX VALVE	X	ON
	N1:T4-M11-66	RIAM	RELAY	1-M11-66 FLR 1W OR-2 PHOENIX VALVE	X	ON
	N1:T4-M11-67	PHOTO	VSMOKE	1-M11-67 FLR 1W CORR 1-SS0237 @ STER STG	X X	ON
	N1:T4-M11-68	PHOTO	VSMOKE	1-M11-68 FLR 1W CORR 1-SS037 @ STG ALC	X	ON
	N1:T4-M11-69	PHOTO	VSMOKE	1-M11-69 FLR 1W CORR 1-SS029 @ N CORR	X X	ON
	N1:T4-M11-70	PHOTO	SMOKE	1-M11-70 FLR 1W CORR 1-SS036	X X	ON
	N1:T4-M11-71	PHOTO	SMOKE	1-M11-71 FLR 1W CORR 1-SS036	X X X	ON
	N1:T4-M11-72	PHOTO	SMOKE	1-M11-72 FLR 1W STOR 1-SS035	X	ON
	N1:T4-M11-73	PHOTO	SMOKE	1-M11-73 FLR 1W SOILED FLUIDS 1-SS032	X X	ON
	N1:T4-M11-74	RIAM	DHOLDER	1-M11-74 FLR 1W CR 4 CORR 1-SS036	X X	ON
	N1:T4-M11-75	RIAM	RELAY	1-M11-75 FLR 1W CR 4 PHOENIX VALVE	X X X	ON
	N1:T4-M11-76	PHOTO	SMOKE	1-M11-76 FLR 1W DAVINCI OR 4 1-SS031 NW	X X	ON
	N1:T4-M11-77	PHOTO	SMOKE	1-M11-77 FLR 1W DAVINCI OR 4 1-SS031 SE	X X X	ON
	N1:T4-M11-78	PHOTO	SMOKE	1-M11-78 FLR 1W PASS 1-PA11	X X X	ON
	N1:T4-M11-79	PHOTO	VSMOKE	1-M11-79 FLR 1W CLEAN UTILITY 1-PA07	X X X X	ON
	N1:T4-M11-80	PHOTO	VSMOKE	1-M11-80 FLR 1W CNC OFFICE 1-PA09	X	ON
	N1:T4-M11-81	PHOTO	VSMOKE	1-M11-81 FLR 1W PACU RECOVERY 1-PA01 N	X X	ON
	N1:T4-M11-82	PHOTO	VSMOKE	1-M11-82 FLR 1W PASS 1-PA12	X X	ON
	N1:T4-M11-83	PHOTO	VSMOKE	1-M11-83 FLR 1W STF LNGE 1-PA14	X X X	ON
	N1:T4-M11-84	HEAT	HEAT	1-M11-84 FLR 1W TLT PA15	X	ON
	N1:T4-M11-85	PHOTO	SMOKE	1-M11-85 FLR 1W PACU RECOVERY 1-PA01 S	X X X	ON
	N1:T4-M11-86	PHOTO	SMOKE	1-M11-86 FLR 1W SOILED UTILITY 1-PA08	X X X	ON
	N1:T4-M11-87	PHOTO	SMOKE	1-M11-87 FLR 1W PASS 1-PA06	X X X	ON
	N1:T4-M11-88	PHOTO	SMOKE	1-M11-88 FLR 1W ELEC 1-PA05	X	ON
	N1:T4-M11-89	ADRPUL	PULL	1-M11-89 FLR 1W NURSE STATION A 1-PA10	X X	ON
	N1:T4-M11-90	RIAM	RRELAY	1-M11-90 FLR 1W DAVINCI OR 4 1-SS029	X X	ON
	N1:T4-M11-91			SPARE	X X X X	ON
	N1:T4-M11-92	PHOTO	VSMOKE	1-M11-92 FLR 1W CORR 1-SS122 @STORAGE	X	ON
	N1:T4-M11-93	PHOTO	VSMOKE	1-M11-93 FLR 1W STORAGE 1-SS125	X X X X	ON
	N1:T4-M11-94			SPARE	X X X X X	ON
	N1:T4-M11-95			SPARE	X X X X X	ON
	N1:T4-M11-96			SPARE	X	ON
	N1:T4-M11-97			SPARE	X X	ON
	N1:T4-M11-98			SPARE	X X	ON
	N1:T4-M11-99			SPARE	X X X	ON
	N1:T4-M11-100	PHOTO	VSMOKE	1-M11-100 FLR 1W PASS 1-SS204 S	X	ON
	N1:T4-M11-101	PHOTO	VSMOKE	1-M11-101 FLR 1W PASS 1-SS204 CTR	X X	ON
	N1:T4-M11-102	PHOTO	VSMOKE	1-M11-102 FLR 1W PASS 1-SS204 N	X X	ON
	N1:T4-M11-103	PHOTO	VSMOKE	1-M11-103 FLR 1W STORE ROOM 1-SS201	X X X	ON
	N1:T4-M11-104	PHOTO	VSMOKE	1-M11-104 FLR 1W EVS 1-SS202	X	ON
	N1:T4-M11-105	HEAT	HEAT	1-M11-105 FLR 1W TOILET 1-SS203	X X	ON
	N1:T4-M11-106	ADRPUL	PULL	1-M11-106 FLR 1W NURSE STATION A 1-SS205	X X X	ON
	N1:T4-M11-107	PHOTO	VSMOKE	1-M11-107 FLR 1W PASS E 1-SS212	X X X	ON
	N1:T4-M11-108	HEAT	HEAT	1-M11-108 FLR 1W TOILET 1-SS206	X X X	ON
	N1:T4-M11-109	PHOTO	VSMOKE	1-M11-109 FLR 1W MEDS 1-SS207	X X X X	ON
	N1:T4-M11-110	PHOTO	VSMOKE	1-M11-110 FLR 1W SOILED UTILITY 1-SS208	X X X X	ON
	N1:T4-M11-111	PHOTO	VSMOKE	1-M11-111 FLR 1W OFFICE 1-SS209	X X X X	ON
	N1:T4-M11-112	PHOTO	VSMOKE	1-M11-112 FLR 1W PASSAGE 1-SS210	X X	ON
	N1:T4-M11-113	PHOTO	VSMOKE	1-M11-113 FLR 1W WORK ROOM 1-SS215	X X X	ON
	N1:T4-M11-114	PHOTO	VSMOKE	1-M11-114 FLR 1W CLEAN UTILITY 1-SS214	X X	ON
	N1:T4-M11-115	ADRPUL	PULL	1-M11-115 FLR 1W NURSE STATION 1-SS213	X X X X	ON
	N1:T4-M11-116	PHOTO	SMOKE	1-M11-116 FLR 1W PASSAGE W 1-SS212	X X X X	ON
	N1:T4-M11-117	HEAT	HEAT	1-M11-117 FLR 1W TOILET 1-SS221	X X X X X	ON
	N1:T4-M11-118	PHOTO	VSMOKE	1-M11-118 FLR 1W NOURISHMENT 1-SS222	X X X X X	ON
	N1:T4-M11-119	PHOTO	VSMOKE	1-M11-119 FLR 1W PASS E 1-SS224	X X X X X	ON
	N1:T4-M11-120	PHOTO	VSMOKE	1-M11-120 FLR 1W PASS N 1-SS224	X X X X	ON
	N1:T4-M11-121	PHOTO	VSMOKE	1-M11-121 FLR 1W PASS S 1-SS224	X X X X	ON
	N1:T4-M11-122	ADRPUL	PULL	1-M11-122 FLR 1W NURSE STAT C 1-SS223	X X X X X	ON
	N1:T4-M11-123	HEAT	HEAT	1-M11-123 FLR 1W TLT 1-SS219	X X X X X	ON
	N1:T4-M11-124	HEAT	HEAT	1-M11-124 FLR 1W TLT 1-SS218	X X X X X	ON
	N1:T4-M11-125	PHOTO	VSMOKE	1-M11-125 FLR 1W NURSE LOUNGE 1-SS217	X X X X X X	ON

NOTE: THE LABELS SHOWN ABOVE WILL BE USED FOR PROGRAMMING PURPOSES.
THE LABELS ARE BASED UPON INFORMATION SHOWN ON THE ARCHITECTURAL DRAWINGS.
ANY CHANGES TO THESE LABELS MUST BE NOTED ON THE SUBMITTAL REVIEW, PRIOR TO PROGRAMMING.
POINTS SHOWN IN ITALIC TEXT REFER TO EXISTING DEVICES.

⚠ IDNET CHANNEL N1:T4-M11 — ADDRESSES IN USE: 158 (63.2%) | SPARE ADDRESSES: 92 (36.8%)

	Address		Location Description	SWITCH SETTINGS 1 2 3 4 5 6 7 8	
	N1:T4-M11-126	HEAT	1-M11-126 FLR 1W TOILET 1-SS220	X X X X X X X	ON
	N1:T4-M11-127	PHOTO	1-M11-127 FLR 1W COMM 1-SS216	X X X X X X X	ON
	N1:T4-M11-128	PHOTO	1-M11-128 ROOF RTU-3 SUP DET TO DDC	X	ON
	N1:T4-M11-129	PHOTO	1-M11-129 ROOF RTU-3 RET DET TO DDC	X	ON
	N1:T4-M11-130	RIAM	1-M11-130 ROOF RTU-3 SUPPLY TO DDC	X	ON
	N1:T4-M11-131	RIAM	1-M11-131 ROOF RTU-3 RETURN TO DDC	X X	ON
	N1:T4-M11-132	RIAM	1-M11-132 FLR 1W ALARM TO DDC AHU-3	X	ON
	N1:T4-M11-133	RIAM	1-M11-133 FLR 1W SUPV FSD TO DDC AHU-3	X X	ON
	N1:T4-M11-134	RIAM	1-M11-134 FLR 1W RET FSD TO DDC AHU-3	X X	ON
	N1:T4-M11-135	RIAM	1-M11-135 FL 1W PACU BY HALL SEC RELEASE	X X X	ON
	N1:T4-M11-136		SPARE	X	ON
	N1:T4-M11-137	PHOTO	1-M11-137 FLR 1 1W CHANGING AREA 7200A	X X	ON
	N1:T4-M11-138	PHOTO	1-M11-138 FLR 1W BREAK RM 7200A	X X	ON
4	**N1:T4-M11-139**	**PHOTO**	**1-M11-139 FLR 1W O/S RADIOLOGY 05 7202A**	X X X	ON
	N1:T4-M11-140	PHOTO	1-M11-140 FLR1 1W STAFF HALL 7203A E	X X	ON
	N1:T4-M11-141	PHOTO	1-M11-141 FLR 1W STAFF HALL 7203A W	X X X	ON
	N1:T4-M11-142	PHOTO	1-M11-142 FLR 1W TECH WORK AREA 7204A	X X X	ON
	N1:T4-M11-143	PHOTO	1-M11-143 FLR 1W EQUIPMENT RM 7203B	X X X X	ON
	N1:T4-M11-144	PHOTO	1-M11-144 FLR 1W CONTROL AREA 7402B	X	ON
	N1:T4-M11-145	PHOTO	1-M11-145 FLR 1W PATIENT HOLDING 7402D	X X	ON
	N1:T4-M11-146	PHOTO	1-M11-146 FLR1 1W CONTROL AREA 7402B S	X X	ON
	N1:T4-M11-147	IAM	1-M11-147 FLR 1W MR2 2 7402A HW SMKDET	X X X	ON
	N1:T4-M11-148		SPARE	X	ON
	N1:T4-M11-149		SPARE	X X X	ON
	N1:T4-M11-150	IAM	1-M11-150 FLR 1W CRAC1 INTERGRAL SMK DET	X X X	ON
	N1:T4-M11-151	PHOTO	1-M11-151 FLR 1W EQUIP RM 1W-8902A	X X X X	ON
	N1:T4-M11-152	PHOTO	1-M11-152 FLR1 IR RM 03 1W-8113A N	X X	ON
	N1:T4-M11-153	PHOTO	1-M11-153 FLR1 IR RM 03 1W-8113A S	X X	ON
	N1:T4-M11-154	PHOTO	1-M11-154 FLR 1W CONTROL RM 1W-8112A	X X X	ON
	N1:T4-M11-155	RIAM	1-M11-155 FLR 1W IR RM 03 MUSIC SHUT-OFF	X X X	ON
	N1:T4-M11-156	IAM	1-M11-156FLR 1W MR2 7402A CRAC UNIT SMK	X X X	ON
	N1:T4-M11-157		SPARE	X X X X	ON
	N1:T4-M11-158	**PHOTO**	**VSMOKE 1-M11-158 FLR 1W RADIOLOGY 05 7202A**	X X X X	ON
	N1:T4-M11-159	**PHOTO**	**VSMOKE 1-M11-159 FLR 1W CT SUITE S300A**	X X X X X	ON
	N1:T4-M11-160	**PHOTO**	**VSMOKE 1-M11-160 FLR 1W CT 01 S303A**	X X	ON
	N1:T4-M11-161	**PHOTO**	**VSMOKE 1-M11-161 FLR 1W CT 02 CONTROL S301A**	X	ON
	N1:T4-M11-162	**PHOTO**	**VSMOKE 1-M11-162 FLR 1W NUC/SPINE ROOM 1 6307A**	X	ON
	N1:T4-M11-163		SPARE	X X X X	ON
	N1:T4-M11-164		SPARE	X X	ON
	N1:T4-M11-165		SPARE	X X X X	ON
	N1:T4-M11-166		SPARE	X X X	ON
	N1:T4-M11-167		SPARE	X X X X	ON
	N1:T4-M11-168		SPARE	X X X	ON
	N1:T4-M11-169		SPARE	X X X	ON
	N1:T4-M11-170		SPARE	X X X X	ON
	N1:T4-M11-171		SPARE	X X X X	ON
	N1:T4-M11-172		SPARE	X X X X	ON
	N1:T4-M11-173		SPARE	X X X X	ON
	N1:T4-M11-174		SPARE	X X X X	ON
	N1:T4-M11-175		SPARE	X X X X X X X	ON
	N1:T4-M11-176		SPARE	X X X X	ON
	N1:T4-M11-177		SPARE	X X X X	ON
	N1:T4-M11-178		SPARE	X X X X	ON
	N1:T4-M11-179		SPARE	X X X X	ON
	N1:T4-M11-180		SPARE	X X X X	ON
	N1:T4-M11-181		SPARE	X X X X	ON
	N1:T4-M11-182		SPARE	X X X X	ON
	N1:T4-M11-183		SPARE	X X X X X X X	ON
	N1:T4-M11-184		SPARE	X X X X	ON
	N1:T4-M11-185		SPARE	X X X X X	ON
	N1:T4-M11-186		SPARE	X X X X	ON
	N1:T4-M11-187		SPARE	X X X X X X X	ON
	N1:T4-M11-188		SPARE	X X X X X X	ON
	N1:T4-M11-189		SPARE	X X X X X X	ON
	N1:T4-M11-190		SPARE	X X X X X X	ON
	N1:T4-M11-191		SPARE	X X X X X X	ON
	N1:T4-M11-192		SPARE	X X	ON
	N1:T4-M11-193		SPARE	X X X	ON
	N1:T4-M11-194		SPARE	X X X	ON
	N1:T4-M11-195		SPARE	X X X X	ON
	N1:T4-M11-196		SPARE	X X X	ON
	N1:T4-M11-197		SPARE	X X X	ON
	N1:T4-M11-198		SPARE	X X X X	ON
	N1:T4-M11-199		SPARE	X X X X	ON
	N1:T4-M11-200		SPARE	X X X X	ON
	N1:T4-M11-201		SPARE	X X X X	ON
	N1:T4-M11-202		SPARE	X X X X	ON
	N1:T4-M11-203		SPARE	X X X X	ON
	N1:T4-M11-204		SPARE	X X X X	ON
	N1:T4-M11-205		SPARE	X X X X X X	ON
	N1:T4-M11-206		SPARE	X X X X X X	ON
	N1:T4-M11-207		SPARE	X X X X X X	ON
	N1:T4-M11-208		SPARE	X X X X X X	ON
	N1:T4-M11-209		SPARE	X X X X X X	ON
	N1:T4-M11-210		SPARE	X X X X X X	ON
	N1:T4-M11-211		SPARE	X X X X X X	ON
	N1:T4-M11-212		SPARE	X X X X X X	ON
	N1:T4-M11-213		SPARE	X X X X X X	ON
	N1:T4-M11-214		SPARE	X X X X X X	ON
	N1:T4-M11-215		SPARE	X X X X X X	ON
	N1:T4-M11-216		SPARE	X X X X X X	ON
	N1:T4-M11-217		SPARE	X X X X X X	ON
	N1:T4-M11-218		SPARE	X X X X X X	ON
	N1:T4-M11-219		SPARE

RSN: 1654836
Permit # 2022-2207219 -LT
Sheet 12 of 36

MEDICAL CENTER OF AURORA SOUTH TOWER TRANSPONDER 4 - EPS-1 CIRCUIT SUMMARY & VOLTAGE DROP

Channel	Description	Alarm Current	% Drop	Unit Load*	Wire Length	Spare Current	Spare VoltageDrop
N1:T4:A2:1	**FLR 1W OR 11, STERILE STG**	**2.241A**	**5.80%**	**36**	**795**	**25%**	**72%**
N1:T4:A2:2	FLR 1W OR 1-4, PACU CORR	1.346A	3.24%	23	690	55%	84%
N1:T4:A2:3	FLR 1W OR RECOVERY	2.008A	4.45%	30	849	33%	78%
EPR2	**FLR 1W MRI AREA BREAK RM 7300A**	**2.257A**	**4.97%**	**34**	**698**	**25%**	**76%**
EPR1	PACU RECOVERY	1.128A	2.53%	17	357	62%	88%

N1:T4:A2: ENHANCED POWER SUPPLY - CHANNEL 1

IDNac Address	Device Type	PID	Setting	Custom Label (Max 40 Characters)		SWITCH SETTINGS 1	2	3	4	5	6	7	8	
N1:T4:A2:1-1	VO	49VO-WRF	15cd	FLR 1W ELEC 1-CS16 T4:A2-1-1		X								ON
N1:T4:A2:1-2	AV	49MTV-WRF	15cd	FLR 1W CORR 1-CS14 T4:A2-1-2			X							ON
N1:T4:A2:1-3	VO	49VO-WRF	15cd	FLR 1W TOILET 1-CS15 T4:A2-1-3		X	X							ON
N1:T4:A2:1-4	AV	49MTV-WRF	15cd	FLR 1W CORR 1-CS14 T4:A2-1-4				X						ON
N1:T4:A2:1-5	AO	49MT-WRF	520 Hz	FLR 1W CASE CARTS 1-CS11 T4:A2-1-5		X		X						ON
N1:T4:A2:1-6	STRB	4906-9202	75cd	FLR 1W STERILE STG 1-CS1 T4:A2-1-6			X	X						ON
N1:T4:A2:1-7	VO	49VO-APPLW	30cd	FLR 1W OR 11 1-SS100 T4:A2-1-7		X	X	X						ON
N1:T4:A2:1-8	REPEATER	4009-9601		FLR 1W BREAK RM 7300A T4:A2-1-8					X					ON
N1:T4:A2:1-9	AV	49MTV-WRF	75cd	FLR 1W MAKE UP 1-CS7 T4:A2-1-9		X			X					ON
N1:T4:A2:1-10	AV	49MTV-WRF	75cd	FLR 1W MAKE UP 1CS7 T4:A2-1-10			X		X					ON
N1:T4:A2:1-11	VO	49VO-WRF	15cd	FLR 1W WAKE UP 1-CS07 T4:A2-1-11		X	X		X					ON
N1:T4:A2:1-12	VO	49VO-WRF	30cd	FLR 1W STERILIZER 1-CS08 T4:A2-1-12				X	X					ON
N1:T4:A2:1-13	VO	49VO-WRF	30cd	FLR 1W CLEAN STORAGE 1-CS06 T4:A2-1-13		X		X	X					ON
N1:T4:A2:1-14	AV	49MTV-WRF	30cd	FLR 1W DECON 1-CS03 T4:A2-1-14			X	X	X					ON
N1:T4:A2:1-15	AV	49MTV-WRF	75cd	FLR 1W CART WASH 1-CS04 T4:A2-1-15		X	X	X	X					ON
N1:T4:A2:1-16	STRB	4906-9202	15cd	FLR 1W DI WATER 1-CS09 T4:A2-1-16						X				ON
N1:T4:A2:1-17	VO	49VO-WRF	15cd	FLR 1W SURGERY VEN 1-CS01 T4:A2-1-17		X				X				ON
N1:T4:A2:1-18	VO	49VO-WRF	15cd	FLR 1W CLEAN STORAGE 1-CS05 T4:A2-1-18			X			X				ON
N1:T4:A2:1-19	AO	49MT-WRF	520 Hz	FLR 1W STERILE STG 1-CSG1 T4:A2-1-19		X	X			X				ON
N1:T4:A2:1-20	STRB	4906-9202	15cd	FLR 1W STERILE STG 1-CSG1 T4:A2-1-20				X		X				ON
N1:T4:A2:1-21	STRB	4906-9202	15cd	FLR 1W STERILE STG 1-CSG1 T4:A2-1-21		X		X		X				ON
N1:T4:A2:1-22	STRB	4906-9202	15cd	FLR 1W STERILE STG 1-CSG1 T4:A2-1-22			X	X		X				ON
N1:T4:A2:1-23	STRB	4906-9202	15cd	FLR 1W STERILE STG 1-CSG1 T4:A2-1-23		X	X	X		X				ON
N1:T4:A2:1-24	STRB	4906-9202	15cd	FLR 1W STERILE STG 1-CSG1 T4:A2-1-24					X	X				ON
N1:T4:A2:1-25	VO	49VO-APPLW	15cd	FLR 1W RADI.03 CHANG AREA T4:A2:1-25		X			X	X				ON
N1:T4:A2:1-26	AV	49MTV-WRF	30cd	FLR 1W BREAK RM 7300A T4:A2-1-26			X		X	X				ON
N1:T4:A2:1-27	VO	49VO-APPLC	15cd	FLR 1W CHANGING AREA 7200A T4:A2-1-27		X	X		X	X				ON
N1:T4:A2:1-28	VO	49VO-APPLC	15cd	FLR 1W O/S RAD. 05 7202A T4:A2-1-28				X	X	X				ON
N1:T4:A2:1-29	AV	49MTV-WRF	15cd	FLR 1W STAFF HALL 7203A T4:A2-1-29		X		X	X	X				ON
N1:T4:A2:1-30	AV	49MTV-WRF	15cd	FLR 1W EQUIP RM 7203B T4:A2-1-30			X	X	X	X				ON
N1:T4:A2:1-31	VO	49VO-APPLC	15cd	FLR 1W TECH WORK AREA 7204A T4:A2-1-31		X	X	X	X	X				ON
N1:T4:A2:1-32	AV	49MTV-WRF	15cd	FLR 1W CONTROL AREA 7402B T4:A2-1-32							X			ON
N1:T4:A2:1-33	VO	49VO-APPLC	15cd	FLR 1W TLT 7402C T4:A2-1-33		X					X			ON
N1:T4:A2:1-34	VO	49VO-APPLC	15cd	FLR 1W PAT HOLDING 7402C T4:A2-1-34			X				X			ON
N1:T4:A2:1-35	AV	49MTV-WRF	15cd	FLR 1W CONTROL AREA 7402B S T4:A2-1-35		X	X				X			ON
N1:T4:A2:1-36	VO	49VO-APPLC	15cd	FLR 1W CHANGING RM 7402E T4:A2-1-36				X			X			ON
N1:T4:A2:1-37	VO	49VO-APPLC	15cd	FLR 1W STAFF TLT 7404A T4:A2-1-37		X		X			X			ON
N1:T4:A2:1-38	AV	49MTV-WRF	15cd	FLR 1W EQUIP RM 1W-8902A T4:A2-1-38			X	X			X			ON
N1:T4:A2:1-39	VO	49VO-APPLC	30cd	FLR 1W IR RM 03 1W-8113A N T4:A2-1-39		X	X	X			X			ON
N1:T4:A2:1-40	VO	49VO-APPLC	30cd	FLR 1W IR RM 03 1W-8113A S T4:A2-1-40					X		X			ON
N1:T4:A2:1-41	AV	49MTV-WRF	15cd	FLR 1W CONTROL RM 1W-8112A T4:A2-1-41		X			X		X			ON
N1:T4:A2:1-42	**VO**	**49VO-WRF**	**15cd**	**FLR 1W RAD RM 5 7202A 1-42**	107		X		X		X			ON
N1:T4:A2:1-43	**VO**	**49VO-WRF**	**15cd**	**FLR 1W BATH 7201A 1-43**	13	X	X		X		X			ON
N1:T4:A2:1-44	**VO**	**49VO-WRF**	**15cd**	**FLR 1W TLT 5305A 1-44**	27			X	X		X			ON
N1:T4:A2:1-45	**AV**	**49MTV-WRF**	**30cd**	**FLR 1W CT SUITE 5300A 1-45**	20	X		X	X		X			ON
N1:T4:A2:1-46	**VO**	**49VO-WRF**	**30cd**	**FLR 1W CT 01 5303A 1-46**	44		X	X	X		X			ON
N1:T4:A2:1-47	**VO**	**49VO-APPLC**	**15cd**	**FLR 1W CT 01 5303A CONTROL 1-47**	44	X	X	X	X		X			ON
N1:T4:A2:1-48	**VO**	**49VO-WRF**	**30cd**	**FLR 1W CT 02 5302A 1-48**	21					X	X			ON
N1:T4:A2:1-49	**VO**	**49VO-APPLC**	**15cd**	**FLR 1W CONTROL 5301A 1-49**	33	X				X	X			ON
N1:T4:A2:1-50	**AV**	**49MTV-WRF**	**15cd**	**FLR 1W NUC/SPINE ROOM 1 6307A 1-50**	76		X			X	X			ON

N1:T4:A2: ENHANCED POWER SUPPLY - CHANNEL 2

IDNac Address	Device Type	PID	Setting	Custom Label (Max 40 Characters)		SWITCH SETTINGS 1	2	3	4	5	6	7	8	
N1:T4:A2:2-1	AV	49MTV-WRF	15cd	FLR 1W EQ STG 1-SS131 1:A2:2-1		X								ON
N1:T4:A2:2-2	VO	49VO-APPLW	75cd	FLR 1W CYSTO OR 3 1-SS129 1:A2:2-2			X							ON
N1:T4:A2:2-3	VO	49VO-APPLW	30cd	FLR 1W OR 2 1-SS119 1:A2:2-3		X	X							ON
N1:T4:A2:2-4	VO	49VO-APPLW	30cd	FLR 1W OR 1 1-SS118 1:A2:2-4				X						ON
N1:T4:A2:2-5	AV	49MTV-WRF	15cd	FLR 1W WOMENS LCKR RM 1-SS135 1:A2:2-5		X		X						ON
N1:T4:A2:2-6	VO	49VO-WRF	15cd	FLR 1W WOMENS LCKR RM 1-SS135 1:A2:2-6			X	X						ON
N1:T4:A2:2-7	VO	49VO-WRF	15cd	FLR 1W WOMENS BATH 1-SS136 1:A2:2-7		X	X	X						ON
N1:T4:A2:2-8	AV	49MTV-WRF	30cd	FLR 1W MENS LCKR RM 1-SS138 1:A2:2-8					X					ON
N1:T4:A2:2-9	VO	49VO-WRF	15cd	FLR 1W MENS LCKR RM 1-SS138 1:A2:2-9		X			X					ON
N1:T4:A2:2-10	AV	49MTV-WRF	75cd	FLR 1W NURSE LOUNGE 1-SS139 1:A2:2-10			X		X					ON
N1:T4:A2:2-11	AV	49MTV-WRF	15cd	SPARE		X	X		X					ON
N1:T4:A2:2-12	AV	49MTV-WRF	15cd	FLR 1W CORR 1-SS029 @OR 1 1:A2:2-12				X	X					ON
N1:T4:A2:2-13	VO	49VO-WRF	15cd	FLR 1W CORR 1-SS029 @OR 1 1:A2:2-13		X		X	X					ON
N1:T4:A2:2-14				SPARE			X	X	X					ON
N1:T4:A2:2-15				SPARE		X	X	X	X					ON
N1:T4:A2:2-16	REPEATER	4009-9601		FLR 1W ELEC 1-PA05 1:A2:2-16						X				ON
N1:T4:A2:2-17	VO	49VO-WRF	15cd	FLR 1W ELEC 1-PA05 1:A2:2-17		X				X				ON
N1:T4:A2:2-18	AV	49MTV-WRF	15cd	FLR 1W PASS 1-PA06 1:A2:2-18			X			X				ON
N1:T4:A2:2-19	VO	49VO-WRF	15cd	FLR 1W SOIL UTILITY 1-PA08 1:A2:2-19		X	X			X				ON
N1:T4:A2:2-20	VO	49VO-WRF	15cd	FLR 1W PACU RECOVERY 1-PA01 1:A2:2-20				X		X				ON
N1:T4:A2:2-21	AV	49MTV-WRF	30cd	FLR 1W NURSE STAT A 1-PA10 1:A2:2-21		X		X		X				ON
N1:T4:A2:2-22	AV	49MTV-WRF	15cd	FLR 1W PASS 1-PA11 1:A2:2-27			X	X		X				ON
N1:T4:A2:2-23	VO	49VO-WRF	15cd	FLR 1W CNC OFF 1-PA09 1:A2:2-28		X	X	X		X				ON
N1:T4:A2:2-24	AV	49MTV-WRF	30cd	FLR 1W CL UTILITY 1-PA07 1:A2:2-29					X	X				ON
N1:T4:A2:2-25	VO	49VO-WRF	30cd	FLR 1W PASS 1-PA12 1:A2:2-30		X			X	X				ON
N1:T4:A2:2-26	AV	49MTV-WRF	30cd	FLR 1W STAFF LOUNGE 1-PA14 1:A2:2-31			X		X	X				ON
N1:T4:A2:2-27	VO	49VO-WRF	15cd	FLR 1W TLT 1-PA15 1:A2:2-32		X	X		X	X				ON
N1:T4:A2:2-28	VO	49VO-APPLW	30cd	FLR 1W DAVINCI OR 4 1-SS031 1:A1:1-28				X	X	X				ON

N1:T4:A2: ENHANCED POWER SUPPLY - CHANNEL 3

IDNac Address	Device Type	PID	Setting	Custom Label (Max 40 Characters)		SWITCH SETTINGS 1	2	3	4	5	6	7	8	
N1:T4:A2:3-1				SPARE		X								ON
N1:T4:A2:3-2				SPARE			X							ON
N1:T4:A2:3-3	VO	49VO-WRF	15cd	FLR 1W COMM 1-SS216 1:A2:2-31		X	X							ON
N1:T4:A2:3-4	AV	49MTV-WRF	30cd	FLR 1W NURSE LOUNGE 1-SS217 1:A2:2-32				X						ON
N1:T4:A2:3-5	VO	49VO-WRF	15cd	FLR 1W TLT 1-SS22 1:A2:2-33		X		X						ON
N1:T4:A2:3-6	VO	49VO-WRF	15cd	FLR 1W TLT 1-SS218 1:A2:2-34			X	X						ON
N1:T4:A2:3-7	VO	49VO-WRF	15cd	FLR 1W TLT 1-SS219 1:A2:2-35		X	X	X						ON
N1:T4:A2:3-8	VO	49VO-WRF	75cd	FLR 1W PASS. 1-SS224 1:A2:2-36					X					ON
N1:T4:A2:3-9	AV	49MTV-WRF	75cd	FLR 1W NURSE STAT C 1-SS223 1:A2:2-37		X			X					ON
N1:T4:A2:3-10				SPARE			X		X					ON
N1:T4:A2:3-11				SPARE		X	X		X					ON
N1:T4:A2:3-12	VO	49VO-WRF	15cd	FLR 1W PASS. 1-SS24 1:A2:3-12				X	X					ON
N1:T4:A2:3-13	VO	49VO-WRF	15cd	FLR 1W STORE RM 1-SS21 1:A2:3-13		X		X	X					ON
N1:T4:A2:3-14	AV	49MTV-WRF	30cd	FLR 1W PASS. 1-SS204 1:A2:3-14			X	X	X					ON
N1:T4:A2:3-15	VO	49VO-WRF	15cd	FLR 1W TLT 1-SS203 1:A2:3-15		X	X	X	X					ON
N1:T4:A2:3-16	VO	49VO-WRF	30cd	FLR 1W PASS 1-SS212 1:A2:3-16						X				ON
N1:T4:A2:3-17	VO	49VO-WRF	15cd	FLR 1W PASS. 1-SS204 1:A2:3-17		X				X				ON
N1:T4:A2:3-18	AV	49MTV-WRF	15cd	FLR 1W PASS. 1-SS201 1:A2:3-18			X			X				ON
N1:T4:A2:3-19	AV	49MTV-WRF	30cd	FLR 1W WK. RM 1-SS215 1:A2:3-19		X	X			X				ON
N1:T4:A2:3-20	VO	49VO-WRF	15cd	FLR 1W LN. UTIL. 1-SS214 1:A2:3-2				X		X				ON
N1:T4:A2:3-21	VO	49VO-WRF	15cd	FLR 1W SOIL UTIL. 1-SS208 1:A2:3-21		X		X		X				ON
N1:T4:A2:3-22	VO	49VO-WRF	15cd	FLR 1W MEDS 1-SS207 1:A2:3-22			X	X		X				ON
N1:T4:A2:3-23	AV	49MTV-WRF	75cd	FLR 1W SECTY 1-SS211 1:A2:3-23		X	X	X		X				ON
N1:T4:A2:3-24	VO	49VO-WRF	15cd	FLR 1W TLT 1-SS206 1:A2:3-24					X	X				ON
N1:T4:A2:3-25	AV	49MTV-WRF	30cd	FLR 1W PASS 1-SS212 1:A2:3-26		X			X	X				ON
N1:T4:A2:3-26	VO	49VO-WRF	15cd	FLR 1W TLT 1-SS221 1:A2:3-26			X		X	X				ON
N1:T4:A2:3-27	VO	49VO-WRF	15cd	FLR 1W NOUR 1-SS222 1:A2:3-27		X	X		X	X				ON

N1:T4:A2:1 — Notification SLC Distributed Load Voltage Drop

Starting Voltage: 29vdc
Min. Device Voltage: 23.vdc
Allowable % Drop: 20.7%

Primary Wire Gauge: 14ga
Home Run Wire Gauge: 14ga

Wire Res. Per Ft. 0.003070 @ 75° Celsius
Wire Res. Per Ft. 0.003070 @ 75° Celsius

Branch	Device #	From	Distance (Feet)	PID	Setting	Device Draw	Class B Calculations: Current at Device	Voltage Drop	Voltage at Device	% Vdrop Wire Length
1	N1:T4:A2:1-1	PANEL	15	49VO-WRF	15cd	0.0470	1.059	0.098	28.902	Branch 1: 5.8%
1	N1:T4:A2:1-2	N1:T4:A2:1-1	25	49MTV-WRF	15cd	0.1450	0.955	0.147	28.756	Length: 795
1	N1:T4:A2:1-3	N1:T4:A2:1-2	22	49VO-WRF	15cd	0.0470	0.047	0.006	28.750	
1	N1:T4:A2:1-4	N1:T4:A2:1-2	51	49MTV-WRF	15cd	0.1450	0.145	0.045	28.710	
1	TAP9	N1:T4:A2:1-2	18	JBOX		0.0000	0.618	0.068	28.688	
1	N1:T4:A2:1-5	TAP9	18	49MT-WRF	520 Hz	0.0990	0.339	0.037	28.650	
1	N1:T4:A2:1-6	N1:T4:A2:1-5	45	4906-9202	75cd	0.1800	0.180	0.050	28.600	
1	N1:T4:A2:1-7	N1:T4:A2:1-1	48	49VO-APPLW	30cd	0.0570	0.057	0.017	28.886	
1	N1:T4:A2:1-8	N1:T4:A2:1-25	89	4009-9601		0.0032	1.122	0.613	27.774	
1	N1:T4:A2:1-9	N1:T4:A2:1-8	18	49MTV-WRF	75cd	0.1980	1.119	0.124	27.650	
1	N1:T4:A2:1-10	N1:T4:A2:1-9	56	49MTV-WRF	75cd	0.1980	0.245	0.084	27.566	
1	TAP10	N1:T4:A2:1-9	29	JBOX		0.0000	0.676	0.120	27.530	
1	N1:T4:A2:1-11	TAP10	17	49VO-WRF	15cd	0.0470	0.104	0.011	27.519	
1	N1:T4:A2:1-12	TAP10	15	49VO-WRF	30cd	0.0570	0.057	0.005	27.525	
1	N1:T4:A2:1-13	N1:T4:A2:1-11	17	49VO-WRF	30cd	0.0570	0.057	0.006	27.513	
1	N1:T4:A2:1-14	TAP10	51	49MTV-WRF	30cd	0.1630	0.515	0.161	27.369	
1	TAP11	N1:T4:A2:1-14	10	JBOX		0.0000	0.305	0.019	27.350	
1	N1:T4:A2:1-15	TAP11	27	49MTV-WRF	75cd	0.1980	0.198	0.033	27.317	
1	N1:T4:A2:1-16	TAP11	26	4906-9202	15cd	0.0600	0.060	0.010	27.340	
1	N1:T4:A2:1-17	TAP11	20	49VO-WRF	15cd	0.0470	0.047	0.006	27.344	
1	N1:T4:A2:1-18	N1:T4:A2:1-14	28	49VO-WRF	15cd	0.0470	0.047	0.008	27.361	
1	N1:T4:A2:1-19	TAP9	10	49MT-WRF	520 Hz	0.0990	0.279	0.017	28.670	
1	N1:T4:A2:1-20	N1:T4:A2:1-24	39	4906-9202	15cd	0.0600	0.060	0.014	28.649	
1	N1:T4:A2:1-21	N1:T4:A2:1-5	2	4906-9202	15cd	0.0600	0.060	0.001	28.649	
1	N1:T4:A2:1-22	N1:T4:A2:1-19	2	4906-9202	15cd	0.0600	0.180	0.002	28.668	
1	N1:T4:A2:1-23	N1:T4:A2:1-22	2	4906-9202	15cd	0.0600	0.120	0.001	28.667	
1	N1:T4:A2:1-24	N1:T4:A2:1-23	10	4906-9202	15cd	0.0600	0.060	0.004	28.663	
1	N1:T4:A2:1-25	N1:T4:A2:1-10	85	49VO-APPLW	15cd	0.0470	0.047	0.025	27.542	
E2:1	N1:T4:A2:1-26	EPR2	26	49MTV-WRF	30cd	0.1630	2.257	0.360	28.640	Branch E2:1: 4.97%
E2:1	N1:T4:A2:1-27	N1:T4:A2:1-26	28	49VO-APPLC	15cd	0.0550	2.094	0.360	28.280	Length: 415
E2:1	N1:T4:A2:1-28	N1:T4:A2:1-27	21	49VO-APPLC	15cd	0.0550	1.366	0.176	28.104	
E2:1	N1:T4:A2:1-29	N1:T4:A2:1-28	29	49MTV-WRF	15cd	0.1450	0.345	0.061	28.042	
E2:1	N1:T4:A2:1-30	N1:T4:A2:1-29	18	49MTV-WRF	15cd	0.1450	0.200	0.022	28.020	
E2:1	N1:T4:A2:1-31	N1:T4:A2:1-30	31	49VO-APPLC	15cd	0.0550	0.055	0.010	28.010	
E2:1	N1:T4:A2:1-32	N1:T4:A2:1-28	22	49MTV-WRF	15cd	0.1450	0.966	0.130	27.973	
E2:1	N1:T4:A2:1-33	N1:T4:A2:1-32	24	49VO-APPLC	15cd	0.0550	0.821	0.121	27.852	
E2:1	N1:T4:A2:1-34	N1:T4:A2:1-33	19	49VO-APPLC	15cd	0.0550	0.766	0.089	27.763	
E2:1	N1:T4:A2:1-35	N1:T4:A2:1-34	25	49MTV-WRF	15cd	0.1450	0.711	0.109	27.654	
E2:1	N1:T4:A2:1-36	N1:T4:A2:1-35	27	49VO-APPLC	15cd	0.0550	0.566	0.094	27.560	
E2:1	N1:T4:A2:1-37	N1:T4:A2:1-36	21	49VO-APPLC	15cd	0.0550	0.511	0.066	27.494	
E2:1	N1:T4:A2:1-38	N1:T4:A2:1-37	34	49MTV-WRF	15cd	0.1450	0.456	0.095	27.399	
E2:1	N1:T4:A2:1-39	N1:T4:A2:1-38	21	49VO-APPLC	30cd	0.0830	0.311	0.040	27.359	
E2:1	N1:T4:A2:1-40	N1:T4:A2:1-39	47	49VO-APPLC	30cd	0.0830	0.083	0.024	27.335	
E2:1	N1:T4:A2:1-41	N1:T4:A2:1-39	22	49MTV-WRF	15cd	0.1450	0.145	0.020	27.339	
E2:1	**N1:T4:A2:1-42**	**N1:T4:A2:1-27**	**17**	**49VO-WRF**	**15cd**	**0.0470**	**0.673**	**0.070**	**28.209**	
E2:1	**N1:T4:A2:1-43**	**N1:T4:A2:1-42**	**13**	**49VO-WRF**	**15cd**	**0.0470**	**0.626**	**0.050**	**28.159**	
E2:1	**N1:T4:A2:1-44**	**N1:T4:A2:1-43**	**27**	**49VO-WRF**	**15cd**	**0.0470**	**0.579**	**0.096**	**28.063**	
E2:1	**N1:T4:A2:1-45**	**N1:T4:A2:1-44**	**19**	**49MTV-WRF**	**30cd**	**0.1630**	**0.532**	**0.062**	**28.001**	
E2:1	**N1:T4:A2:1-46**	**N1:T4:A2:1-45**	**42**	**49VO-WRF**	**30cd**	**0.0570**	**0.057**	**0.015**	**27.987**	
E2:1	**N1:T4:A2:1-47**	**N1:T4:A2:1-45**	**35**	**49VO-APPLC**	**15cd**	**0.0550**	**0.112**	**0.024**	**27.977**	
E2:1	**N1:T4:A2:1-48**	**N1:T4:A2:1-47**	**22**	**49VO-WRF**	**30cd**	**0.0570**	**0.057**	**0.008**	**27.970**	
E2:1	**N1:T4:A2:1-49**	**N1:T4:A2:1-45**	**33**	**49VO-APPLC**	**15cd**	**0.0550**	**0.200**	**0.041**	**27.961**	
E2:1	**N1:T4:A2:1-50**	**N1:T4:A2:1-49**	**75**	**49MTV-WRF**	**15cd**	**0.1450**	**0.145**	**0.067**	**27.894**	

N1:T4:A2:2 — Distributed Load Voltage Drop

Starting Voltage: 29vdc
Min. Device Voltage: 23.vdc
Allowable % Drop: 20.7%

Primary Wire Gauge: 14ga
Home Run Wire Gauge: 14ga

Wire Res. Per Ft. 0.003070 @ 75° Celsius
Wire Res. Per Ft. 0.003070 @ 75° Celsius

Branch	Device #	From	Distance (Feet)	PID	Setting	Device Draw	Class B Calculations: Current at Device	Voltage Drop	Voltage at Device	% Vdrop Wire Length
1	TAP12	PANEL	105	JBOX		0.0000	1.198	0.772	28.228	Branch 1: 3.24%
1	N1:T4:A2:2-11	TAP12	18	49MTV-WRF	15cd	0.1450	0.145	0.016	28.212	Length: 458
1	N1:T4:A2:2-1	TAP12	33	49MTV-WRF	15cd	0.1450	0.359	0.073	28.155	
1	N1:T4:A2:2-2	N1:T4:A2:2-1	31	49VO-APPLW	75cd	0.1000	0.214	0.041	28.114	
1	N1:T4:A2:2-3	N1:T4:A2:2-2	45	49VO-APPLW	30cd	0.0570	0.114	0.031	28.083	
1	N1:T4:A2:2-12	N1:T4:A2:2-13	27	49MTV-WRF	15cd	0.1450	0.145	0.024	28.200	
1	N1:T4:A2:2-4	N1:T4:A2:2-3	37	49VO-APPLW	30cd	0.0570	0.057	0.013	28.070	
1	N1:T4:A2:2-14	N1:T4:A2:2-4	16			0.0000	0.000	0.000	28.070	
1	N1:T4:A2:2-13	TAP12	11	49VO-WRF	15cd	0.0470	0.047	0.003	28.224	
1	N1:T4:A2:2-5	TAP12	19	49MTV-WRF	15cd	0.1450	0.647	0.075	28.152	
1	TAP13	N1:T4:A2:2-5	11	JBOX		0.0000	0.502	0.034	28.118	
1	N1:T4:A2:2-6	TAP13	19	49VO-WRF	15cd	0.0470	0.292	0.034	28.084	
1	N1:T4:A2:2-7	N1:T4:A2:2-6	25	49VO-WRF	15cd	0.0470	0.047	0.007	28.077	
1	N1:T4:A2:2-8	TAP13	19	49MTV-WRF	30cd	0.1630	0.210	0.024	28.094	
1	N1:T4:A2:2-9	N1:T4:A2:2-8	23	49VO-WRF	15cd	0.0470	0.047	0.007	28.087	
1	N1:T4:A2:2-10	N1:T4:A2:2-6	19	49MTV-WRF	75cd	0.1980	0.198	0.023	28.061	
2	N1:T4:A2:2-16	PANEL	232	4009-9601		0.0032	0.003	0.005	28.995	Branch 2: 0.02%
E1:1	N1:T4:A2:2-17	EPR1	18	49VO-WRF	15cd	0.0470	1.128	0.125	28.875	Branch E1:1: 2.53%
E1:1	N1:T4:A2:2-18	N1:T4:A2:2-17	25	49MTV-WRF	15cd	0.1450	1.081	0.166	28.709	Length: 357
E1:1	N1:T4:A2:2-19	N1:T4:A2:2-18	21	49VO-WRF	15cd	0.0470	0.047	0.006	28.703	
E1:1	TAP14	N1:T4:A2:2-18	25	JBOX		0.0000	0.889	0.136	28.573	
E1:1	N1:T4:A2:2-20	TAP14	23	49VO-WRF	15cd	0.0470	0.047	0.007	28.566	
E1:1	N1:T4:A2:2-21	TAP14	29	49MTV-WRF	30cd	0.1630	0.842	0.150	28.423	
E1:1	TAP15	N1:T4:A2:2-21	9	JBOX		0.0000	0.679	0.038	28.385	
E1:1	N1:T4:A2:2-22	TAP15	17	49MTV-WRF	15cd	0.1450	0.412	0.043	28.342	
E1:1	N1:T4:A2:2-23	N1:T4:A2:2-22	14	49VO-WRF	15cd	0.0470	0.267	0.023	28.320	
E1:1	N1:T4:A2:2-24	N1:T4:A2:2-23	25	49MTV-WRF	30cd	0.1630	0.220	0.034	28.286	
E1:1	N1:T4:A2:2-28	N1:T4:A2:2-24	52	49VO-APPLW	30cd	0.0570	0.057	0.018	28.268	
E1:1	N1:T4:A2:2-25	TAP15	55	49VO-WRF	30cd	0.0570	0.267	0.090	28.295	
E1:1	N1:T4:A2:2-26	N1:T4:A2:2-25	13	49MTV-WRF	30cd	0.1630	0.210	0.017	28.279	
E1:1	N1:T4:A2:2-27	N1:T4:A2:2-26	31	49VO-WRF	15cd	0.0470	0.047	0.009	28.270	

N1:T4:A2:3 — Distributed Load Voltage Drop

Starting Voltage: 29vdc
Min. Device Voltage: 23.vdc
Allowable % Drop: 20.7%

Primary Wire Gauge: 14ga
Home Run Wire Gauge: 14ga

Wire Res. Per Ft. 0.003070 @ 75° Celsius
Wire Res. Per Ft. 0.003070 @ 75° Celsius

Branch	Device #	From	Distance (Feet)	PID	Setting	Device Draw	Class B Calculations: Current at Device	Voltage Drop	Voltage at Device	% Vdrop Wire Length
1	TAP16	PANEL	104	JBOX		0.0000	0.649	0.414	28.586	Branch 1: 1.98%
1	N1:T4:A2:3-3	TAP16	60	49VO-WRF	15cd	0.0470	0.257	0.095	28.491	Length: 296
1	N1:T4:A2:3-4	N1:T4:A2:3-3	24	49MTV-WRF	30cd	0.1630	0.210	0.031	28.460	
1	N1:T4:A2:3-5	N1:T4:A2:3-4	28	49VO-WRF	15cd	0.0470	0.047	0.008	28.452	
1	N1:T4:A2:3-6	TAP16	33	49VO-WRF	15cd	0.0470	0.392	0.079	28.506	
1	N1:T4:A2:3-7	N1:T4:A2:3-6	13	49VO-WRF	15cd	0.0470	0.345	0.028	28.479	
1	N1:T4:A2:3-8	N1:T4:A2:3-7	21	49VO-WRF	75cd	0.1000	0.298	0.038	28.440	
1	N1:T4:A2:3-9	N1:T4:A2:3-8	13	49MTV-WRF	75cd	0.1980	0.198	0.016	28.424	
2	TAP17	PANEL	118	JBOX		0.0000	1.359	0.985	28.015	Branch 2: 4.45%
2	N1:T4:A2:3-12	TAP17	90	49VO-WRF	15cd	0.0470	0.408	0.225	27.790	Length: 553
2	N1:T4:A2:3-13	N1:T4:A2:3-12	14	49VO-WRF	15cd	0.0470	0.047	0.004	27.786	
2	N1:T4:A2:3-14	N1:T4:A2:3-12	28	49MTV-WRF	30cd	0.1630	0.314	0.054	27.736	
2	N1:T4:A2:3-15	N1:T4:A2:3-14	24	49VO-WRF	15cd	0.0470	0.047	0.007	27.729	
2	N1:T4:A2:3-16	N1:T4:A2:3-14	31	49VO-WRF	30cd	0.0570	0.104	0.020	27.716	
2	N1:T4:A2:3-17	N1:T4:A2:3-16	24	49VO-WRF	15cd	0.0470	0.047	0.007	27.709	
2	N1:T4:A2:3-18	TAP17	25	49MTV-WRF	15cd	0.1450	0.951	0.146	27.869	
2	N1:T4:A2:3-19	N1:T4:A2:3-18	13	49MTV-WRF	30cd	0.1630	0.210	0.017	27.853	
2	N1:T4:A2:3-20	N1:T4:A2:3-19	18	49VO-WRF	15cd	0.0470	0.047	0.005	27.847	
2	N1:T4:A2:3-21	N1:T4:A2:3-18	19	49VO-WRF	15cd	0.0470	0.094	0.011	27.858	
2	N1:T4:A2:3-22	N1:T4:A2:3-21	19	49VO-WRF	15cd	0.0470	0.047	0.005	27.853	
2	TAP18	N1:T4:A2:3-18	19	JBOX		0.0000	0.502	0.059	27.811	
2	N1:T4:A2:3-23	TAP18	25	49MTV-WRF	75cd	0.1980	0.245	0.038	27.773	
2	N1:T4:A2:3-24	N1:T4:A2:3-23	13	49VO-WRF	15cd	0.0470	0.047	0.004	27.769	
2	N1:T4:A2:3-25	TAP18	30	49MTV-WRF	30cd	0.1630	0.257	0.047	27.763	
2	N1:T4:A2:3-26	N1:T4:A2:3-25	20	49VO-WRF	15cd	0.0470	0.047	0.006	27.758	
2	N1:T4:A2:3-27	N1:T4:A2:3-25	23	49VO-WRF	15cd	0.0470	0.047	0.007	27.757	

GENERAL NOTES:

1. THE INFORMATION OR SYMBOLS SHOWN IN BOLD LINETYPE ARE NEW OR RELOCATED.
2. THE INFORMATION OR SYMBOLS SHOWN IN LIGHT LINETYPE ARE EXISTING TO REMAIN.

KEYNOTES:

1. DEVICE REMOVED FOR CONSTRUCTION.
2. DEVICE IS INTERIM FOR CONSTRUCTION. TO BE REPLACED OR REMOVED DURING BUILDOUT.
3. DEVICE WAS INTERIM FOR CONSTRUCTION AND IS NOW REMOVED.
4. EXISTING DEVICE REINSTALLED. RE-USE EXISTING HEAD, BASE, ADDRESS, LOCATION, AND WIRING.

City of Aurora Building Division
Reviewed for Code Compliance
Approved as Noted: W. Polk
Date: Sep 07, 2022
2015 INTERNATIONAL CODES & 2020 NEC

Johnson Controls
DISTRICT - 419
14200 E. EXPOSITION AVE
AURORA, CO 80012
SERVICE: 303-355-0500
PHONE: 303-355-0500
FAX: 303-355-0615

NICET CERTIFICATION INFORMATION
NANCY S. WILTSIE
NICET Fire Alarm, III
Certification #93727
Valid Through: 03/01/24
September 7, 2022

THE MEDICAL CENTER OF AURORA - SOUTH CAMPUS CT 1 AND RAD ROOM 5

THE MEDICAL CENTER OF AURORA
1501 SOUTH POTOMAC STREET
AURORA, COLORADO 80012

ISSUE LOG: Revisions shown with symbol

MARK	DATE	CAD	CHK	DESCRIPTION
1	08/29/2022	CBR	NSW	CHANGES PER CUSTOMER REQUEST DATED 08/25/2022.
2	09/07/2022	CBR	NSW	CHANGES PER FIRE DEPARTMENT REVIEW DATED 09/03/2022.

FOR PERMIT

DRAWN BY:	CBR
CHECKED BY:	NSW
ISSUE DATE:	7/5/22
JOB #:	
PROJECT #:	419:650184053

JOHNSON CONTROLS © 2022

SYSTEM: FIRE ALARM SYSTEM

SHEET: NODE-1 TRANSPONDER-4 BUILDOUT CALCS & SCHEDULES CONTINUED

FA-605

FILE PATH: c:\Users\jrauchc\johnson controls\project electronics - medical center of aurora\1501 s potomac - aurora south\south tower - node 1\32-ct1 & radrm5 - 2022 - 650184053\Fire\FA-601.dwg
LAST SAVED BY: JRAUCHC
LAST PRINTED: 9/7/2022 12:50:04 PM
30" x 42" - Arch E1 Size

© Johnson Controls 2022. All rights reserved. Reuse, copying, modification or alteration of the drawings and other information contained herein is strictly prohibited.

STANDARD SENSOR BASE

SIMPLEX 4098-9792

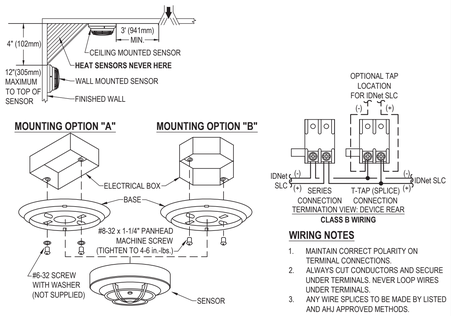

WIRING NOTES

1. MAINTAIN CORRECT POLARITY ON TERMINAL CONNECTIONS.
2. ALWAYS CUT CONDUCTORS AND SECURE UNDER TERMINALS. NEVER LOOP WIRES UNDER TERMINALS.
3. ANY WIRE SPLICES TO BE MADE BY LISTED AND AHJ APPROVED METHODS.

MOUNTING OPTIONS

OPTION [1]	DESCRIPTION	NOTE
A	SINGLE GANG BOX, 2-1/8" (54mm) DEEP - FLUSH MOUNT	BY OTHERS
B	4" (102mm) OCTAGONAL BOX, 1-1/2" (38mm) DEEP, MINIMUM - FLUSH MOUNT	BY OTHERS
C	4" (102mm) SQUARE BOX, 1-1/2" DEEP (MIN) W/ SIMPLEX 4098-9832 ADAPTER KIT	BOX BY OTHERS, 4098-9832 ORDERED SEPARATELY
D	4" (102mm) SQUARE BOX, 1-1/2" DEEP (MIN) W/ SINGLE GANG COVER PLATE 3/4" (19mm) EXTENSION	BY OTHERS

1. FOR ADDITIONAL MOUNTING OPTIONS, DOWNLOAD DATA SHEET 4098-0019 FROM HTTP://WWW.SIMPLEX-FIRE.COM

TrueAlert ES ADDRESSABLE APPLIANCES

SIMPLEX 49MTV SERIES WALL MOUNTED MULTI-TONE AUDIBLE / VISUAL

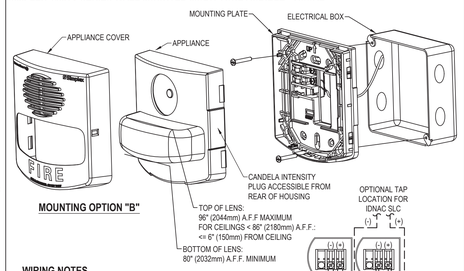

WIRING NOTES

1. MAINTAIN CORRECT POLARITY ON TERMINAL CONNECTIONS.
2. ALWAYS CUT CONDUCTORS AND SECURE UNDER TERMINALS. NEVER LOOP WIRES UNDER TERMINALS.
3. ANY WIRE SPLICES TO BE MADE BY LISTED AND AHJ APPROVED METHODS.

MOUNTING OPTIONS

OPTION [1]	DESCRIPTION	NOTE
A	SINGLE GANG OR DOUBLE GANG BOX, 1-1/2" (38mm) MINIMUM DEPTH	BY OTHERS
B	4" (102mm) SQUARE BOX, 1-1/2" (38mm) MINIMUM DEPTH	BY OTHERS
C	SIMPLEX 2975-9145, 7-7/8"H x 5-1/8"W x 2-3/4"D (127mm x 98mm x 56mm) REQUIRES 4905-9931 PLATE	ORDERED SEPARATELY

1. FOR ADDITIONAL MOUNTING OPTIONS, DOWNLOAD DATA SHEET S49MTV-0001 FROM HTTP://WWW.SIMPLEX-FIRE.COM

TrueAlert ES ADDRESSABLE APPLIANCES

SIMPLEX 49VO SERIES WALL MOUNTED VISUAL ONLY

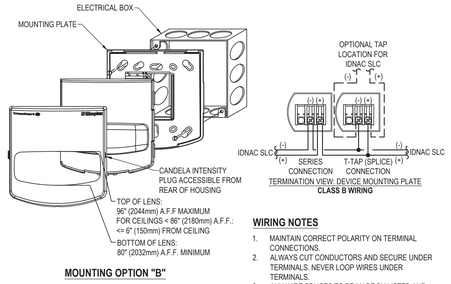

WIRING NOTES

1. MAINTAIN CORRECT POLARITY ON TERMINAL CONNECTIONS.
2. ALWAYS CUT CONDUCTORS AND SECURE UNDER TERMINALS. NEVER LOOP WIRES UNDER TERMINALS.
3. ANY WIRE SPLICES TO BE MADE BY LISTED AND AHJ APPROVED METHODS.

MOUNTING OPTIONS

OPTION [1]	DESCRIPTION	NOTE
A	SINGLE GANG OR DOUBLE GANG BOX, 1-1/2" (38mm) DEEP (MIN)	BY OTHERS
B	4" (102mm) SQUARE BOX, 1-1/2" DEEP (MIN)	BY OTHERS
C	SIMPLEX 2975-9145, 7-7/8"H x 5-1/8"W x 2-3/4"D (127mm x 98mm x 56mm) REQUIRES 4905-9931 PLATE	ORDERED SEPARATELY

1. FOR ADDITIONAL MOUNTING OPTIONS, DOWNLOAD DATA SHEET S49VO-0001 FROM HTTP://WWW.SIMPLEX-FIRE.COM

TrueAlert ES ADDRESSABLE APPLIANCES

SIMPLEX 49VO / 49VOH SERIES CEILING MOUNTED VISUAL ONLY

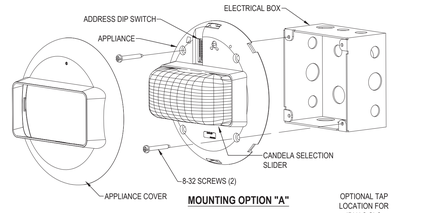

WIRING NOTES

1. MAINTAIN CORRECT POLARITY ON TERMINAL CONNECTIONS.
2. ALWAYS CUT CONDUCTORS AND SECURE UNDER TERMINALS. NEVER LOOP WIRES UNDER TERMINALS.
3. ANY WIRE SPLICES TO BE MADE BY LISTED AND AHJ APPROVED METHODS.

MOUNTING OPTIONS

OPTION [1]	DESCRIPTION	NOTE
A	4" SQUARE ELECTRICAL BOX, 1-1/2" (39mm) MINIMUM DEPTH	BY OTHERS
B	SINGLE GANG ELECTRICAL BOX, 1-1/2" (39mm) MINIMUM DEPTH, WITH 49VO-APCS ADAPTER PLATE	BOX BY OTHERS, SIMPLEX ADAPTER PLATE

1. FOR ADDITIONAL MOUNTING OPTIONS, DOWNLOAD DATA SHEET S49VOC-0001 FROM HTTP://WWW.SIMPLEX-FIRE.COM

DEVICE MOUNTING HEIGHT REFERENCE

PER NFPA 72

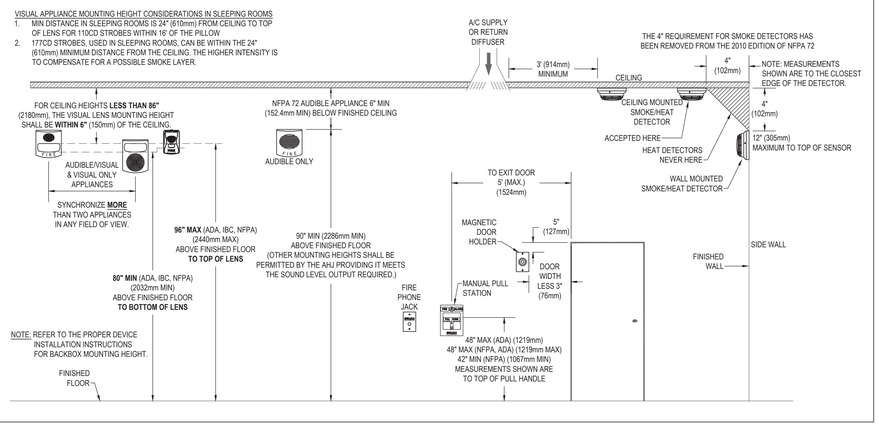

TYPICAL DEVICE WIRING

SCALE:N.T.S.

City of Aurora Building Division
Reviewed for Code Compliance
Approved as Noted: W. Polk
Date: Sep 07, 2022
2015 INTERNATIONAL CODES & 2020 NEC

Johnson Controls
DISTRICT: I-18
1500 S. POTOMAC STREET, SUITION AVE
AURORA, CO 80012
SERVICE: 303-355-6000
PHONE: 303-355-0500
FAX: 303-355-0415

NICET CERTIFICATION INFORMATION
NANCY S. WILTSIE
NICET Fire Alarm, III
Certification #93727
Valid Through: 03/01/24
September 7, 2022

THE MEDICAL CENTER OF AURORA - SOUTH CAMPUS CT 1 AND RAD ROOM 5

THE MEDICAL CENTER OF AURORA
1501 SOUTH POTOMAC STREET
AURORA, COLORADO 80012

Revisions shown with ▲ symbol

ISSUE LOC:	DATE:	CAD:	CHK:	DESCRIPTION
MARK: 1	08/29/2022	CBR	NSW	CUSTOMER REQUEST DATED 08/29/2022
2	09/07/2022	CBR	NSW	CHANGES PER FIRE DEPARTMENT REVIEW DATED 09/01/2022

FOR PERMIT

DRAWN BY:	CBR
CHECKED BY:	NSW
ISSUE DATE:	7/5/22
JOB #:	
PROJECT #:	419-650184053

JOHNSON CONTROLS © 2022

SYSTEM:
FIRE ALARM SYSTEM

SHEET:
TYPICAL DEVICE WIRING

FA-701

FILE PATH: c:\Users\jlaucho\johnson controls\project electronics - medical center of aurora\1501 s potomac - aurora south\south tower - node 132-ct1 & adm15 - 2022 - 650184053-FireFA-701.dwg
LAST SAVED BY: JRAUCHC
LAST PRINTED: 9/7/2022 12:50:10 PM
30" x 42" Arch E1 Size
© Johnson Controls 2022. All rights reserved. Reuse, copying, modification or alteration of the drawings and other information contained herein is strictly prohibited.

RSN: 1654836
Permit # 2022-2207219 -LT
Sheet 14 of 36

GENERAL NOTES:

1. THIS 36"X48" STATIC GRAPHIC MAP IS NOT SHOWN TO SCALE.

AS OF: 08/29/2022

THE MEDICAL CENTER OF AURORA
1501 S. POTOMAC ST
AURORA, COLORADO 80012

LEGEND:

FACP	FIRE ALARM CONTROL PANEL
FATC	FIRE ALARM TERMINAL CABINET
ANN	GRAPHIC ANNUNCIATOR
MAP	GRAPHIC ZONE MAP
S	SMOKE DETECTOR
	HEAT DETECTOR
	MANUAL PULL STATION
KH	KITCHEN HOOD SYSTEM
	SPRINKLER WATERFLOW VALVE
	SPRINKLER TAMPER SWITCH
	DUCT DETECTOR
	FIRE DEPARTMENT CONNECTION
	FIRE HYDRANT

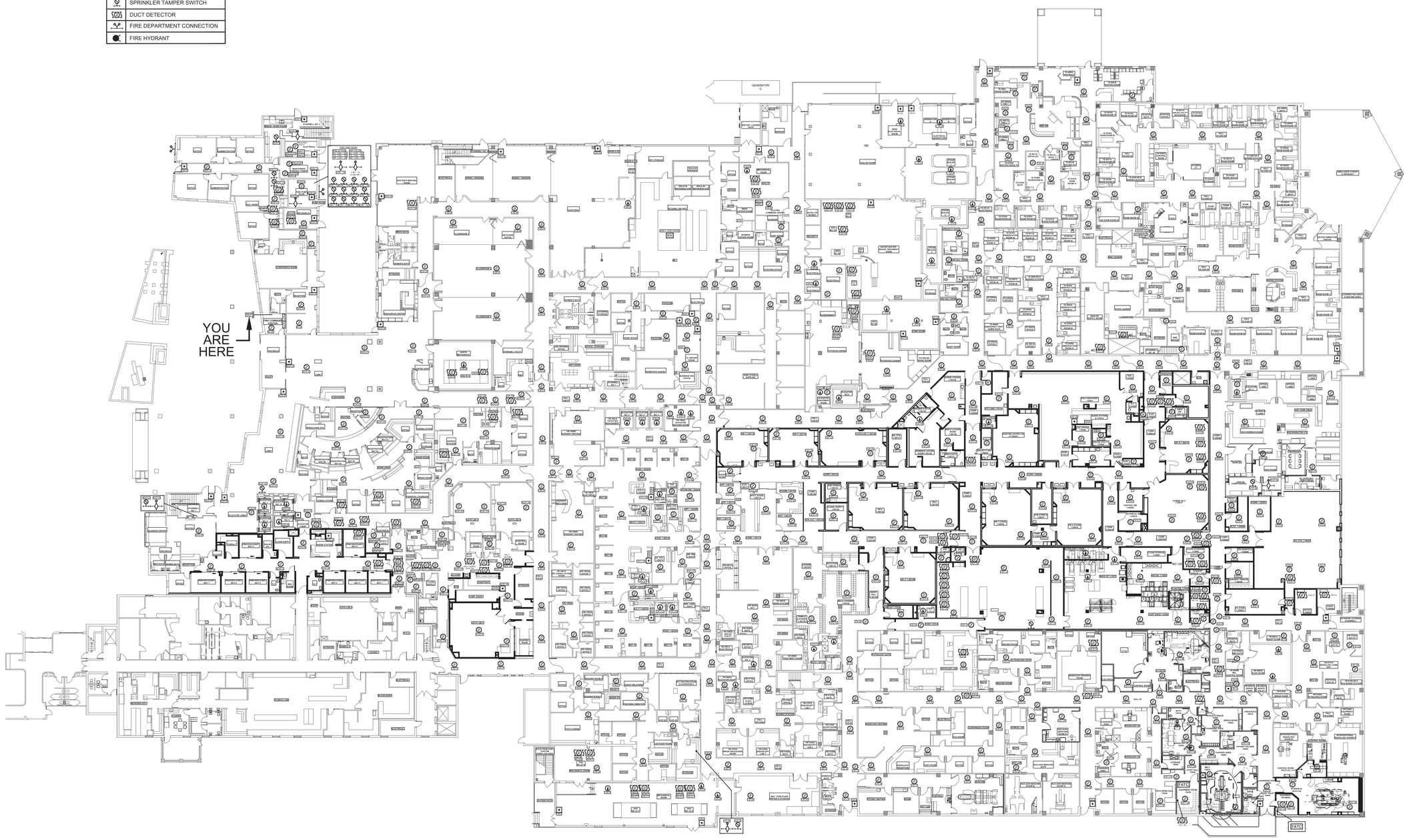

Johnson Controls
AURORA (303) 355-0500

The Medical Center of Aurora
Health ONE

Johnson Controls
DISTRICT - 419
14200 E. EXPOSITION AVE
AURORA, CO 80012
SERVICE: 303-355-0500
PHONE: 303-355-0500
FAX: 303-355-0615

NICET CERTIFICATION INFORMATION

NANCY S. WILTSIE
NICET Fire Alarm, III
Certification #93727
Valid Through: 03/01/24

Nancy S Wiltsie
September 7, 2022

THE MEDICAL CENTER OF AURORA - SOUTH CAMPUS
CT 1 AND RAD ROOM 5

THE MEDICAL CENTER OF AURORA
1501 SOUTH POTOMAC STREET
AURORA, COLORADO 80012

Revisions shown with △ symbol

ISSUE LOG: MARK	DATE	CAD	CHK	DESCRIPTION
1	08/29/2022	CBR	NSW	CHANGES PER CUSTOMER REQUEST DATED 08/25/2022
2	09/07/2022	CBR	NSW	CHANGES PER FIRE DEPARTMENT REVIEW DATED 09/03/2022

FOR PERMIT

DRAWN BY:	CBR
CHECKED BY:	NSW
ISSUE DATE:	7/5/22
JOB #:	
PROJECT #:	419:650184053

JOHNSON CONTROLS © 2022

SYSTEM:
FIRE ALARM SYSTEM

SHEET:
STATIC GRAPHIC MAP AT FIRE COMMAND CENTER 1C-1013A

1 **FA-801**

© Johnson Controls 2022. All rights reserved. Reuse, copying, modification or alteration of the drawings and other information contained herein is strictly prohibited.

FILE PATH: c:\Users\jrauchc\johnson controls\project electronics - medical center of aurora\1501 s potomac - aurora south\south tower - node 132-ct1 & radm5 - 2022 - 650184053\Fire\FA-901.dwg
LAST SAVED BY: JRAUCHC
LAST PRINTED: 9/7/2022 12:50:23 PM
30" x 42" - Arch E1 Size

Johnson Controls
14200 E. Exposition Avenue
Aurora, Colorado 80012

www.simplexgrinnell.com

Tele: (303) 355-0500
Fax: (303) 355-0615

Fire Alarm
Product Data Submittal for:

The Medical Center of Aurora - South
CT1 and Rad Room 5
1501 South Potomac Street
Aurora, Colorado 80012

Prepared for:

Odin Electric
2120 South Ash Street. Unit 200
Denver, Colorado 80222

Johnson Controls
14200 E. Exposition Avenue
Aurora, Colorado 80012
Sales: (303) 355-0500
Service: (303) 355-0500
Fax: (303) 355-0615

PROJECT:	The Medical Center of Aurora - South CT1 and Rad Room 5
PREPARED FOR:	Odin Electric

TYPE:	***DESCRIPTION:***
4098-9714	TRUEALARM PHOTO SMOKE SENSOR
4098-9733	TRUEALARM HEAT SENSOR
4098-9792	TRUEALARM SENSOR BASE
49MTV-WRF	MULTI-TONE A/V, RED, WALL MOUNT
49VO-WRF	VO, WALL MT, RED, FIRE LABEL
49VO-APPLC	VO APPLIANCE ONLY CEIL MT
49VO-APCS	VO CEIL MT ADAPTER PLATE
49VOC-CRF	VO COVER, CEIL MT, RED, FIRE

RSN: 1654836
Permit # 2022-2207219 -LT
Sheet 17 of 36

Features

TrueAlarm analog sensing provides the following features

- Digital transmission of analog sensor values using IDNet or MAPNET II two-wire communications

For use with the following Simplex products

- 4007ES, 4010, 4010ES, 4100ES, and 4100U Series control units ; and 4008 Series control units with reduced feature set (refer to data sheet *S4008-0001* for details)
- 4020, 4100, and 4120 Series control units, Universal Transponders, and 2120 TrueAlarm CDTs equipped for MAPNET II operation

Fire alarm control unit provides the folloing features

- Peak value logging with accurate analysis of each sensor for individual sensitivity selection
- Sensitivity monitoring meets NFPA 72 sensitivity testing requirements; automatic individual sensor calibration check verifies sensor integrity
- Automatic environmental compensation, multi-stage alarm operation, and display of sensitivity directly in percent for each foot
- Display and print detailed sensor information in plain English language

Photoelectric smoke sensors provide the following features

- Sensitivity levels from 0.2% to 3.1%. See TrueAlarm sensors for more information.

Heat sensors have these features

- Three fixed temperature sensing thresholds: 135°F, 155°F and 190°F
- Rate-of-rise temperature sensing
- Utility temperature sensing
- Listed to UL 521 and ULC-S530

General features

- Ceiling or wall mounting
- Listed to UL 268 7th Edition and ULC-S529
- NEMA 1 rated. See TrueAlarm analog sensing product selection chart for more information.
- Louvered smoke sensor design enhances smoke capture by directing flow to chamber; entrance areas are minimally visible when ceiling mounted
- Designed for EMI compatibility
- Magnetic testing
- Different bases support a supervised or unsupervised output relay, or a remote LED alarm indicator

Additional base reference

- For isolator bases, refer to data sheet *S4098-0025*
- For sounder bases, refer to data sheet *S4098-0028*
- For photo/heat sensors, refer to data sheet *S4098-0024* , single address and *S4098-0033* , dual address

Description

Digital communication of analog sensing

TrueAlarm analog sensors provide an analog measurement digitally communicated to the host control panel using Simplex addressable communications. The control unit analyses the data, determines an average value and stores it. Comparing the sensor's present value against its average value and time, determines an alarm or other abnormal condition.

Intelligent data evaluation

Monitoring each sensor's average value provides a continuously shifting reference point. A software filtering process compensates for environmental factors, such as dust and dirt, and component aging, to provide an accurate reference for evaluating new activity. This filtering reduces the probability of false or nuisance alarms caused by shifts in sensitivity, either up or down.

Control unit selection

The control unit stores peak activity for each sensor to assist in evaluating specific locations. The host control unit determines the alarm set point for each TrueAlarm sensor, selectable as more or less sensitive as the individual application requires.

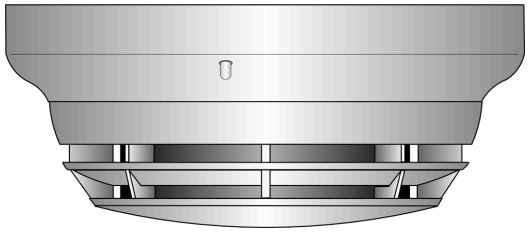

Figure 1: 4098-9714 TrueAlarm photoelectric sensor mounted in base

Timed/multi-stage selection

You can program the sensor alarm set points for timed automatic sensitivity selection, such as more sensitive at night, less sensitive during day. You can program the control unit to provide multi-stage operation for each sensor.

Sensor alarm and trouble LED indication

Each sensor base's LED pulses to indicate communications with the unit. If the control unit determines a sensor is in alarm, is dirty, or has some other type of trouble, the details are annunciated at the control unit and the sensor's base LED will turn on steadily. During a system alarm, the control unit will control the LEDs such that an LED indicating a trouble will return to pulsing to help identify the alarmed sensors.

TrueAlarm sensor bases and accessories

Sensor base features

Base mounted address selection

- Address remains with its programmed location
- Accessible from front, DIP switch under sensor

General features

- Automatic identification provides default sensitivity when substituting sensor types
- Integral red LED for power-on, pulsing, or alarm or trouble, steady on
- Locking anti-tamper design mounts on standard outlet box
- Magnetically-operated functional test

* These products have been approved by the California State Fire Marshal (CSFM) pursuant to Section 13144.1 of the California Health and Safety Code. See CSFM Listings 7272-0026:218, 7271-0026:231, 7270-0026:216, and 7300-0026:217 for allowable values and/or conditions concerning material presented in this document. Additional listings may be applicable, contact your local Simplex product supplier for the latest status. Listings and approvals under Simplex Time Recorder Co. are the property of Tyco Fire Protection Products.

RSN: 1654836
Permit # 2022-220
Sheet 18 of 36

Sensor bases

4098-9792, standard sensor base

4098-9789, sensor base with wired connections

- 2098-9808 remote LED alarm indicator or 4098-9822 relay (relay is unsupervised and requires separate 24 VDC)

Supervised relay bases not compatible with 2120 CDT:

- **4098-9791, 4-wire sensor base,** use with remote or locally mounted 2098-9737 relay, requires separate 24 VDC
- **4098-9780, 2-wire sensor base,** use with remote or locally mounted 4098-9860 relay, no separate power required
- Supervised relay operation is programmable and can be manually operated from control unit
- Includes wired connections for remote LED alarm indicator **or** 4098-9822 relay, relay is unsupervised and requires separate 24 VDC

Sensor base options

2098-9737, remote or local mount supervised relay

- DPDT contacts for resistive/suppressed loads
- power limited rating of 3 A at 28 VDC
- non-power limited rating of 3 A at 120 VAC, requires external 24 VDC coil power

4098-9860, remote or local mount supervised relay

- SPDT dry contacts, power limited rating of 2 A at 30 VDC, resistive; non-power limited rating of 0.5 A at 125 VAC, resistive

4098-9822, LED annunciation relay

- Activates when base LED is on steady, indicating local alarm or trouble
- DPDT contacts for resistive/suppressed loads, power limited rating of 2 A at 28 VDC; non-power limited rating of 1/2 A at 120 VAC, (requires external 24 VDC coil power)

4098-9832, adapter plate

- Required for surface or semi-flush mounting to 4 in. square electrical box and for surface mounting to 4 in. octagonal box
- Can be used for cosmetic retrofitting to existing 6 3/8 in. diameter base product

2098-9808, remote red LED alarm indicator

- Mounts on single gang box

Figure 2: Remote red LED alarm indicator

Description

TrueAlarm sensor bases contain integral addressable electronics that constantly monitor the status of the detachable photoelectric or heat sensors. Each sensor's output is digitized and transmitted to the system fire alarm control unit every four seconds.

You can easily interchange different TrueAlarm sensor types to meet specific location requirements. This feature allows intentional sensor substitution during building construction. When conditions are temporarily dusty, you can install heat sensors without reprogramming the control unit, as covering smoke sensors causes them to be disabled. Although the control unit will indicate an incorrect sensor type, the heat sensor will operate at a default sensitivity providing heat detection for building protection at that location.

Mounting reference

Electrical Box Requirements: (boxes are by others)

Without relay in the box: 4" octagonal or 4" square, 1-1/2" deep; single gang, 2" deep

With relay in the box : 4" octagonal or 4" square, 1-1/2" deep, with 1-1/2" extension ring

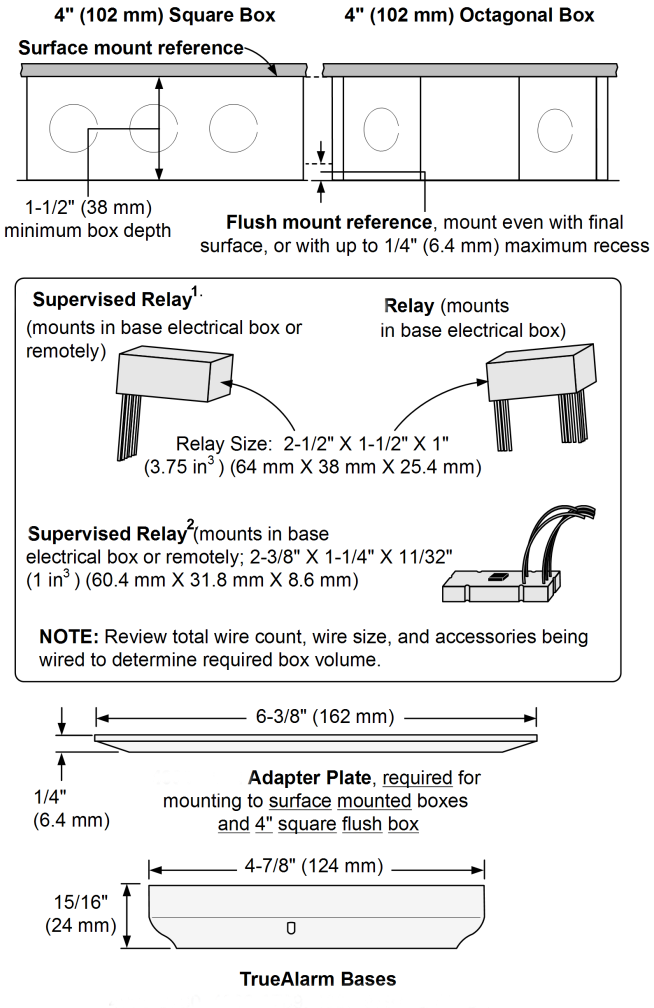

Figure 3: Mounting reference

Table 1: Product mounting - SKU reference

Product	SKU
Relay	4098-9822
Supervised relay	Example 1 2098-9739 Example 2 4098-9860
Adapter plate	4098-9832
TrueAlarm bases	4098-9780, 4098-9789, 4098-9791, 4098-9792

RSN: 1654836
Permit # 2022-220[illegible]
Sheet 19 of 36

TrueAlarm sensors

Features

- Sealed against rear air flow entry
- Interchangeable mounting
- EMI/RFI shielded electronics
- Heat sensors:
  - Selectable rate compensated, fixed temperature sensing with or without rate-of-rise operation
  - Rated spacing distance between sensors:

Fixed Temp. Setting	UL and ULC Spacing	FM Spacing, Either Fixed Temperature Setting
135°F (57.2°C) 190°F (88°C)	60 ft x 60 ft (18.3 m)	20 ft x 20 ft (6.1 m) for fixed temperature only; RTI = Quick
155°F (68°C)	40 ft x 40 ft (12.2 m)	50 ft x 50 ft (15.2 m) for fixed temperature with either rate-of-rise selection; RTI = Ultra Fast

Note: 190°F (88°C) ratings apply only to the 4098-9734 sensor.

Smoke sensors

- Photoelectric technology sensing
- 360° smoke entry for optimum response
- Built-in insect screens

4098-9714 photoelectric sensor

TrueAlarm photoelectric sensors use a stable, pulsed LED light source and a silicon photodiode receiver to deliver consistent and accurate low power smoke sensing. There are three user-selectable sensitivities for special applications for each individual sensor: 0.2%, 0.5%, and 1% for each foot. Standard sensitivity is 1.25% to 3.1% for each foot. The fire alarm control unit runs an algorithm that can vary the sensitivity for normal applications between 1.25% and 3.1% for each foot.

Note: Fixed sensitivity settings higher than 1.0% for each foot are not UL268 7th Edition compliant.

The sensor head design provides 360° smoke entry for optimum response to smoke from any direction. Due to its photoelectric operation, air velocity is not normally a factor, except for impact on area smoke flow.

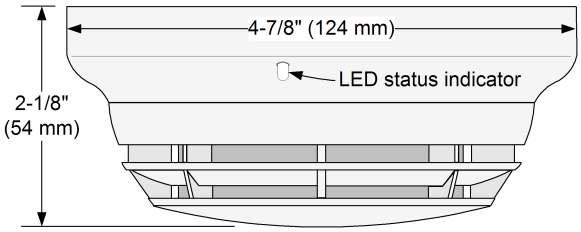

Figure 4: 4098-9714 photoelectric sensor with base

4098-9733 and 4098-9734 heat sensors

TrueAlarm heat sensors are self-restoring and provide rate-compensated, fixed temperature sensing, you can select with or without rate-of-rise temperature sensing. Due to its small thermal mass, the sensor accurately and quickly measures the local temperature for analysis at the fire alarm control unit.

You can select rate-of-rise temperature detection at the control unit for either 15°F or 20°F, (8.3°C or 11.1°C) for each minute. Fixed temperature sensing is independent of rate-of-rise sensing and you can program it to operate at 135°F or 155°F (57.2°C or 68°C). The 4098-9734 sensor provides an additional 190°F (88°C) set point.

In a slowly developing fire, the temperature may not increase rapidly enough to operate the rate-of-rise feature. However, an alarm will be initiated when the temperature reaches its rated fixed temperature setting.

You can program TrueAlarm heat sensors as a utility device to monitor for temperature extremes in the range of 32°F to 155°F (0°C to 68°C). This feature can provide freeze warnings, or alert you to HVAC system problems. Refer to panel specifications for availability.

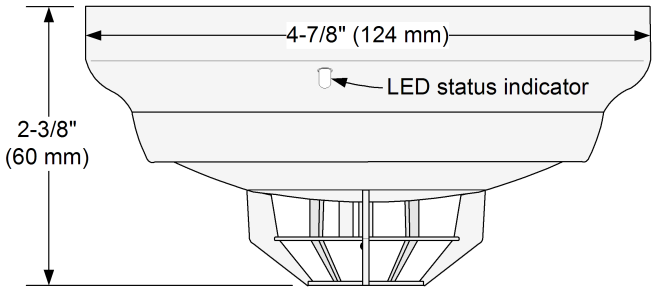

Figure 5: 4098-9733 heat sensor with base

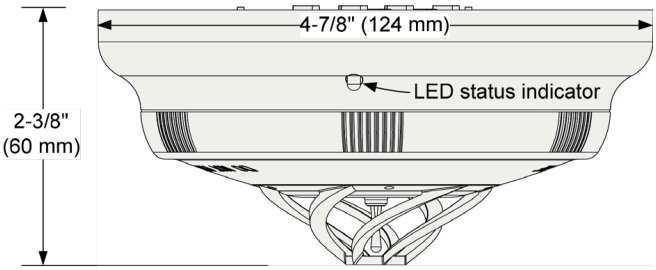

Figure 6: 4098-9734 high temperature heat sensor with base

WARNING: In most fires, hazardous levels of smoke and toxic gas can build up before a heat detection device would initiate an alarm. In cases where Life Safety is a factor, the use of smoke detection is highly recommended.

Application reference

Sensor locations should be determined only after careful consideration of the physical layout and contents of the area to be protected. Refer to NFPA 72, ***the National Fire Alarm and Signaling Code***. On smooth ceilings, a smoke sensor spacing of 30 ft (9.1 m) can be used as a guide.

For detailed application information including sensitivity selection, refer to *Installation Instructions 574-709*.

RSN: 1654836
Permit # 2022-220
Sheet 20 of 36

TrueAlarm analog sensing product selection chart

Table 2: TrueAlarm sensor bases (for use with sensors 4098-9714 and 4098-9733)

SKU	Color	Description	Compatibility	Mounting requirements
4098-9792 GSA4098-9792	White	Standard sensor base	No options	4 in. octagonal or 4 in. square box, 1 1/2 in. min. depth; or single gang box, 2 in. min. depth
4098-9776	Black			
4098-9789 4098-9789IND GSA4098-9789	White	Sensor base with connections for remote LED alarm indicator **or** unsupervised relay	2098-9808 remote alarm indicator or 4098-9822 unsupervised relay	4 in. octagonal or 4 in. square box **Note:** Box depth requirements depend on total wire count and wire size, see Table 4 for reference.
4098-9775	Black			
4098-9791 **Note:** NOT compatible with the 2120 CDT	White	4-wire sensor supervised relay base with connections for LED indicator or unsupervised relay	2098-9737 supervised remote relay	
			2098-9808 remote alarm indicator or 4098-9822 unsupervised relay	
4098-9780 GSA4098-9780 **Note:** NOT compatible with the 2120 CDT	White	2-wire sensor supervised relay base with connections for LED indicator or unsupervised relay	4098-9860 supervised remote relay	
			2098-9808 remote alarm indicator or 4098-9822 unsupervised relay	

Note: SKU numbers ending in IND are assembled in India. SKU numbers with GSA prefix are assembled in the USA.

Refer to *Application Manual 574-709* and *Installation Instructions 574-707* for additional information.

Table 3: TrueAlarm sensors

SKU	Color	Description	Compatibility	Mounting requirements
4098-9714 4098-9714-IND GSA4098-9714	White	Photoelectric smoke sensor	Bases 4098-9775, 4098-9776, 4098-9792, 4098-9789, 4098-9791, and 4098-9780	Refer to base requirements
4098-9774	Black			
4098-9733 GSA4098-9733	White	Heat sensor		
4098-9778	Black			
4098-9734 GSA4098-9734	White	High temperature heat sensor		

Note:

- All of these SKUs are NEMA 1 rated.
- The 4098-9734 Heat Sensor is compatible with IDNet on the 4100ES, 4010ES, and 4007ES only.
- SKU numbers with GSA prefix are assembled in the USA.

Table 4: TrueAlarm sensor/base accessories

SKU	Description	Compatibility	Mounting requirements
2098-9737	Supervised relay, mounts remote or in base electrical box	For use with 4098-9791 base	Remote mounting requires 4 in. octagonal or 4 in. square box, 1 1/2 in. minimum depth Base mounting requires 4 in. octagonal box, 2 1/8 in. deep with 1 1/2 in. extension ring
4098-9860	Supervised relay, mounts remote or in base electrical box	For use with 4098-9780 base	
2098-9808	Remote red LED alarm indicator on single gang stainless steel plate	Bases 4098-9789, 4098-9791, and 4098-9780	Single gang box, 1 1/2 in. minimum depth
4098-9822	Unsupervised relay, tracks base led status. **Note:** Mounts only in base electrical box.	Bases 4098-9789, 4098-9791, and 4098-9780	4 in. octagonal box, 2 1/8 in. deep with 1 1/2 in. extension ring
4098-9832	Adapter plate	Bases 4098-9792, 4098-9789, 4098-9791, and 4098-9780	Required for surface or semi-flush mounted 4 in. square box and for surface mounted 4 in. octagonal box

Note: 2098-9808 is NEMA 1 rated.

RSN: 1654836
Permit # 2022-220
Sheet 21 of 36

Specifications

Table 5: General operating specifications

Specification		Rating
Communications and sensor supervisory power		IDNet or MAPNET II communications, auto-selected, one address for each base
Communications connections		Screw terminals for in/out wiring, 18 to 14 AWG, 0.82 mm^2 to 2.08 mm^2
Remote LED alarm indicator current		1 mA typical, no impact to alarm current
Remote LED alarm indicator and relay connections		Color coded wire leads, 18 AWG, 0.82 mm^2
UL listed operating temperature range		32°F to 100°F, 0°C to 38°C
Operating temperature range	with 4098-9733 Heat Sensor	32°F to 122°F, 0°C to 50°C
	with 4098-9714 Smoke Sensor	15°F to 122°F, -9°C to 50°C
	with 4098-9734 Heat Sensor	32°F to 150°F, 0°C to 66°C
Storage temperature range		0°F to 140°F, -18°C to 60°C
Humidity range		10% to 95% RH
4098-9714 smoke sensor air velocity rating		0 to 4000 ft/min, 0 to 1220 m/min
Housing color		Frost white or black

Table 6: 4098-9791 Base with supervised remote relay 2098-9737

Specification	Rating
Externally supplied relay coil voltage	18 VDC to 32 VDC, nominal 24 VDC
Supervisory current	270 µA, from 24 VDC supply
Alarm current with 2098-9737 relay	28 mA, from 24 VDC supply
Note: See Sensor base options for contact ratings.	

Table 7: 4098-9780 Base with supervised remote relay 4098-9860

Specification	Rating
Power	Supplied from communications

Table 8: 4098-9822 Unsupervised relay, requirements for bases 4098-9789, 4098-9791, and 4098-9780

Specification	Rating
Externally supplied relay coil voltage	18 VDC to 32 VDC, nominal 24 VDC
Supervisory current	Supplied from communications
Alarm current	13 mA from separate 24 VDC supply
Note: See Sensor base options for contact ratings.	

© 2022 Johnson Controls. All rights reserved. All specifications and other information shown were current as of document revision and are subject to change without notice. Additional listings may be applicable, contact your local Simplex® product supplier for the latest status. Listings and approvals under Simplex Time Recorder Co. Simplex, and the product names listed in this material are marks or registered marks. Unauthorized use is strictly prohibited. NFPA 72 and National Fire Alarm Code are registered trademarks of the National Fire Protection Association (NFPA).

Simplex

TrueAlert ES Addressable Notification Appliances

*UL, ULC, CSFM Listed**
*FM Approved**

Audible/Visible Notification Appliances;
Multi-Tone Horn/Strobe with 520 Hz Output

Features

Individually addressed and controlled multi-tone and multi-candela TrueAlert ES A/V (audible/visible) notification appliances provide:

- Multi-candela xenon strobe with synchronized 1 Hz flash rate and with intensity ***programmable from the control panel*** or jumper selected as 15, 30, 75, 110, 135, or 185 cd
- Advanced addressable notification controlled by ***IDNAC SLCs*** providing ***regulated 29 VDC*** allowing strobes to operate with lower current even under battery backup
- Wiring supervision to each appliance allowing "T-tapped" connections for Class B circuits to simplify wiring (Class A circuits require in/out wiring)
- ***Self-Test Mode*** allows on-board sensors to detect the strobe and horn output and then report their status to the control panel
- Per appliance tone selection of: 520 Hz Horn, Broadband Horn, Bell, Chime, High/Low, Slow Whoop, or Siren; *programmable from the control panel*, or selected using an on-board DIP Switch (refer to sound output details on page 4)
- 520 Hz tone is compliant with NFPA 72 Low Frequency Signal Requirements for Sleeping Areas
- Horn, Bell, and High/Low tones can be controlled as: Temporal Code 3, Temporal Code 4, March Time (selectable as 20, 60, or 120 bpm), or Continuous
- Slow Whoop, Siren, and Chime tone selections are controlled as synchronized continuous operation
- Output of "high" or "low" (~6 dBA difference) selectable at the appliance or from the controller with FACP mode selected at the appliance
- ***TrueAlert Device Reports*** at the control panel detailing appliance point ID, custom label, type, and candela setting (see sample on page 3)
- ***Magnet Test diagnostics*** to assist checkout and testing of appliances and wiring
- ***Electrical test point access*** without removing cover
- Compatibility with ADA requirements; (refer to important installation information on page 3)
- Strobe operation is listed to UL Standard 1971 and ULC Standard S526; Horn operation is listed to UL Standard 464 and ULC Standard S525

LED Indicator and Magnet Test feature:

- Appliance LED can be selected to display each polling cycle to indicate appliance supervision
- When the controller is in diagnostic mode, the Magnet Test pulses the LED to indicate appliance address and can be set to also briefly flash the strobe and sound the horn

TrueAlert ES Multi-Tone Addressable A/Vs are Available in Red with White Lettering and White with Red Lettering

Features *(Continued)*

Mechanical design features include:

- Rugged, high impact, flame retardant thermoplastic housing in red with white letters or white with red letters, with clear lens, available with FIRE, FEU, ALERT, FEU/FIRE, or blank lettering
- Separate covers are available to change application type on-site or for replacement; covers can be easily removed without disturbing the connected housing and avoiding trouble conditions
- A separate mounting plate allows wiring to be completed before appliance is mounted; use with single gang, double gang, or 4-inch square box, flush or surface mount
- In/out wiring terminals for 18 AWG to 12 AWG
- Optional mounting adapters are available to cover surface mounted electrical boxes and to adapt to Simplex 2975-9145 boxes

Description

TrueAlert ES addressable multi-tone A/Vs are individually addressed audible/visible notification appliances that receive power, supervision, and control signals from a Simplex fire alarm control panel providing **IDNAC** Signaling Line Circuits (SLCs). (See compatibility list on page 4.)

Strobe Application Reference

Proper selection of visible notification is dependent on occupancy, location, local codes, and proper applications of: the *National Fire Alarm Code* (NFPA 72), ANSI A117.1; the appropriate model building code: BOCA, ICBO, or SBCCI; and the application guidelines of the Americans with Disabilities Act (ADA).

* This product has been approved by the California State Fire Marshal (CSFM) pursuant to Section 13144.1 of the California Health and Safety Code. See CSFM Listing 7135-0026:0380 for allowable values and/or conditions concerning material presented in this document. Additional listings may be applicable; contact your local Simplex product supplier for the latest status. Listings and approvals under Simplex Time Recorder Co. are the property of Tyco Fire Protection Products.

TrueAlert ES Operation Advantage

TrueAlert ES addressable appliances on IDNAC SLCs provide separate visible and audible notification using a single two-wire circuit that also *confirms connection to the individual notification appliance's electronic circuit*. This operation increases circuit supervision integrity by providing supervision that extends beyond the appliance wiring connections.

Reduced current allows efficient IDNAC SLC operation. With ***IDNAC SLCs***, a ***constant*** 29 VDC source voltage is maintained, even during battery standby, allowing strobes to operate at higher voltage with lower current and ensuring a consistent current draw and voltage drop margin under both primary power and secondary battery standby. Efficiencies include wiring distances up to 2 to 3 times farther than with conventional notification, or support for more appliances per IDNAC SLC, or use of smaller gauge wiring, or combinations of these benefits, all providing installation and maintenance savings with high assurance that appliances that operate during normal system testing will operate during worst case alarm conditions.

Reducing Installation and Testing Time. With separate controls on the same two-wire SLC, installation time and expense for both retrofit and new construction can be significantly reduced. When Class B wiring is used, *wiring can be "T" tapped*, allowing more savings in distance, wire, conduit (size and utilization), and overall installation efficiency. Use of Self-Test and Magnet Test features improve installation efficiency. TrueAlert device reports conveniently identify information about each connected appliance.

TrueAlert ES Diagnostics

Test Features. When IDNAC SLCs are in diagnostic mode, *Self-Test* and *Magnet Test* features provide individual appliance testing. With the *Self-Test* feature, *appliance operation can be confirmed without leaving the control panel*. Additionally, each appliance's LED can be selected to pulse when it receives a supervision poll during normal operation.

***Self-Test* Details.** Selecting Self-Test Mode from the control panel allows on-board sensors, depending on the device type, to detect its own strobe and/or horn output and then report their status to the control panel. Operation is by selected VNAC appliance groups and is either automatic (all briefly simultaneously activated) or individually activated by applying a magnet. (Refer to control panel data sheet for more Self-Test information, see list on page 4.)

Silent Appliance Magnet Test. In this test mode, in response to application of a magnet, the appliance LED pulses sequentially to conveniently indicate the appliance's address.

Operational Appliance Magnet Test. In this test mode, after the address is indicated by pulsing the appliance LED, the strobe will briefly flash and the horn will briefly sound to indicate proper operation.

TrueStart Instrument Two (TSIT). The 2nd generation of the Simplex TrueStart Test Instrument adds testing of IDNAC SLC wiring and TrueAlert ES appliances to its ability to test IDCs, NACs, and IDNet communications *before connection to the control panel*. Please contact your local Simplex representative for additional information.

TrueAlert Addressable Wiring Isolator

Isolator Model 4905-9929 is available for remote mounting on TrueAlert addressable circuits to isolate short circuited wiring from functioning wiring. (See data sheet S4905-0001.)

Product Selection

TrueAlert ES Wall Mount Multi-Tone Addressable Audible/Visible Appliances

TrueAlert ES multi-tone addressable A/V appliances include cover and matching mounting plate except as noted;
Dimensions with Cover = 5 ⅛" H x 5" W x 2 ⅝" D (130 mm x 127 mm x 67 mm)

Model*	Cover Color	Wording	Lens Color	Model*	Cover Color	Wording	Lens Color
49MTV-WRF(-BA)	Red	FIRE	Clear	49MTV-WRS-BA	Red	Blank	Clear
49MTV-WWF(-BA)	White			49MTV-WWS-BA	White		
49MTV-APPLW(-BA)	Select cover and mounting plate separately						

Separate Mounting Plate (Required when ordering model 49MTV-APPLW(-BA))

Model*	Color	Model	Color	Note
49MP-AVVOWR	Red	49MP-AVVOWW	White	Mounting Plate, select color to match cover

*** Note:** (-BA) indicates model is available either with or without the -BA suffix. Model numbers ending in -BA, APPLW models, and separate mounting plates are assembled in the USA.

Separate Covers (Required when ordering model 49MTV-APPLW(-BA), uses same covers as 49AV Series fixed tone A/Vs)

Model	Color	Wording	Model	Color	Wording
49AVC-WRFIRE	Red	FIRE	49AVC-WRFEU	Red	FEU
49AVC-WWFIRE	White		49AVC-WWFEU	White	
49AVC-WRALT	Red	ALERT	49AVC-WRBLNG	Red	FEU/FIRE
49AVC-WWALT	White		49AVC-WWBLNG	White	
49AVC-WRS	Red	Logos Only	49AVC-WWS	White	Logos Only

Mounting Adapters

Model	Color	Description	Dimensions
4905-9937	Red	Surface Mount Adapter Skirt	5 ⅜" H x 5 ¼" W x 1 ⅝" D (136 mm x 133 mm x 41 mm) Total depth with strobe = 4 ⅜" (111 mm)
4905-9940	White		
4905-9931	Red Adapter Plate for mounting to Simplex 2975-9145 Box (typically for retrofit, mount vertical or horizontal)		8 $\frac{5}{16}$" x 5 ¾" x 0.060" Thick (211 mm x 146 mm x 1.5 mm)
2975-9145	Red Mounting Box, requires 4905-9931 Adapter Plate		7 ⅞" x 5 ⅛" x 2 ¾" D (200 mm x 130 mm x 70 mm)

TrueAlert Device Reports Reference

Service Port — Page 1
REPORT 5 : TrueAlert Device Report — 12:34:56am TUE 10-Mar-15

POINT ID	CUSTOM LABEL	DEVICE TYPE	CANDELA
T14-1-1	Location Label . . . up to 40 characters	MT AV	15
T14-1-2	Break Room 5	MT AV	110
T14-1-3	Boiler Room	VO	75
T14-1-4	Elec. Room 7	AV	135

Installation Reference

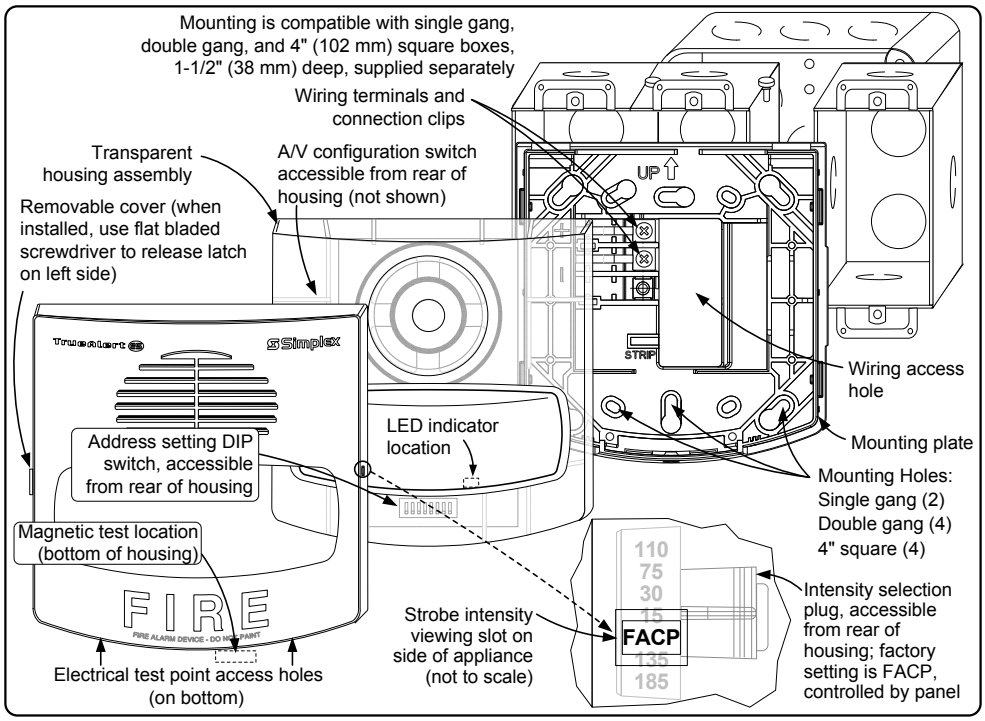

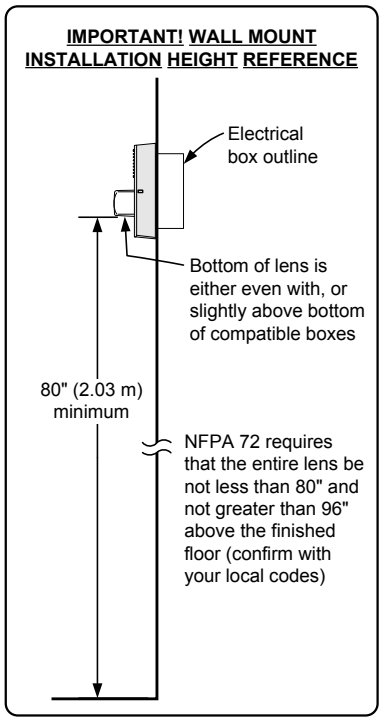

Adapter Plate and Surface Mount Installation Reference

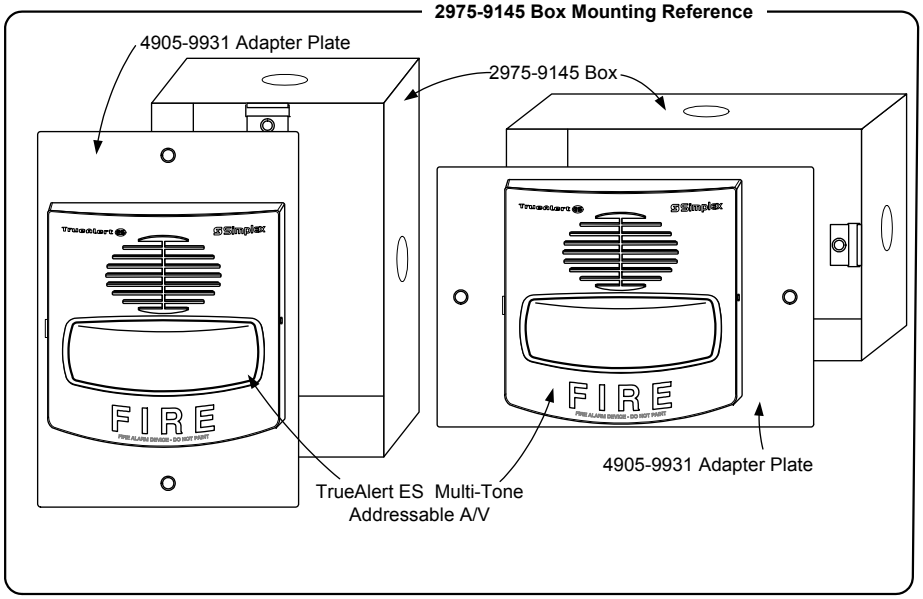

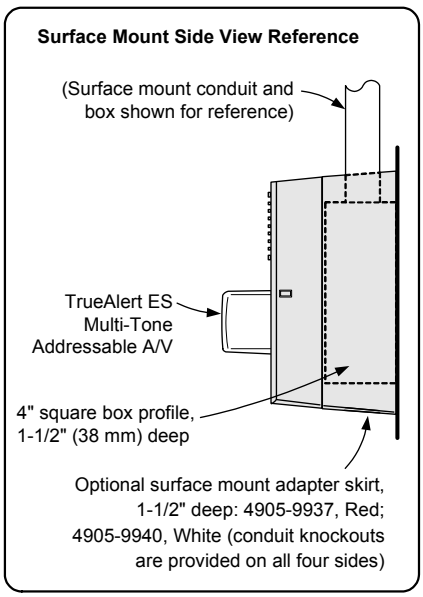

IDNAC SLC Controller Compatibility Reference

Compatible Controllers	Data Sheet Reference	Controller Output	IDNAC SLC Output Voltage	Appliance Voltage Design Reference
4100ES with EPS+ or EPS Power Supply	S4100-0100	IDNAC SLC	29 VDC (regulated)	23 VDC (with 6 VDC drop)
4009 IDNAC Repeater	S4009-0004			
4007ES with IDNAC Notification	S4007-0002			
4010ES with ESS Enhanced System Supply	S4010-0011			

TrueAlert ES A/V Specifications

Electrical Ratings	Typical Operating Voltage Range	23 VDC to 29.5 VDC, Special Application
	Supervisory Requirements	2 unit loads (1 unit load = 0.8 mA control panel current)
	49MTV Series SLC Loading	Up to 21 appliances can connect directly to the panel IDNAC SLC or to a 4009 IDNAC Repeater output, to a maximum of 127 addresses and 139 unit loads per SLC
IDNAC SLC Wiring Specifications (refer to control panel or power supply installation instructions for more information)		UTP, unshielded twisted pair recommended
		Maximum wire length allowed with "T-Taps" for Class B wiring per SLC = 10,000 ft (3048 m)
		Maximum wire length to any appliance = 4000 ft (1219 m)

Tone Characteristics

520 Hz Horn	520 Hz tone	These tones are compatible with control panel IDNAC commands for operation as Temporal Code 3, Temporal Code 4, March Time at 20, 60, or 120 bpm, or Continuous operation
Broadband Horn	Combination 600/3000 Hz signal	
Bell	Synthesized Bell tone	
High/Low	Alternating modulated tones with fundamentals of 1000 Hz and 800 Hz, 250 ms duration each	
Slow Whoop	Modulated 520 Hz to 1200 Hz sweep with 2 s duration	These tones operate as Continuous with synchronization
Siren	Modulated 600 Hz to 1200 Hz to 600 Hz sweep, with 2 s duration	
Chime	Multi-phase signal with a peak and decay time of 1 s	

TrueAlert ES Multi-Tone Horn/Strobe Current Ratings

	RMS Current Ratings @ 23 VDC, in mA											
	15 cd		30 cd		75 cd		110 cd		135 cd		185 cd	
Tone	**High**	**Low**	**High**	**Low**	**High**	**Low**	**High**	**Low**	**High**	**Low**	**High**	**Low**
520 Hz Horn and High/Low	145	108	163	125	198	158	230	195	262	214	299	257
Broadband Horn, Bell, Chime, Slow Whoop, and Siren	135	99	152	111	185	139	212	172	247	203	284	243

TrueAlert ES Multi-Tone Horn/Strobe Horn Output

		UL 464 Output Ratings @ 23 VDC and 29.5 VDC (dBA)*								ULC S525 Output Ratings @ 23 VDC and 29.5 VDC (dBA)*							
		Steady High		Steady Low		Coded High		Coded Low		Steady High		Steady Low		Coded High		Coded Low	
Tone	**Voltage**	**23**	**29.5**	**23**	**29.5**	**23**	**29.5**	**23**	**29.5**	**23**	**29.5**	**23**	**29.5**	**23**	**29.5**	**23**	**29.5**
520 Hz Horn		80	80	74**	75	76	76	70**	71**	83†		79†		83†		78†	
High/Low		81	82	77	77	75	76	70**	71**	87		82†		86†		82†	
Broadband Horn		84	84	79	79	81	81	74**	75	88		84†		87†		83†	
Bell		80	80	75	75	76	76	71**	71**	85		80†		85†		80†	
Slow Whoop		79	80	74**	75	these tones are not used for coded operation				85		80†		these tones are not used for coded operation			
Siren		79	80	74**	75					85		80†					
Chime**		67**	67**	62**	62**					82†		77†					

* Output ratings are at 10 ft (3 m); UL 464 ratings are per UL Reverberant Chamber testing; ULC S525 ratings are per ULC Anechoic Chamber testing. The tone generator circuit is DC-DC converter powered and provides essentially constant output over the rated voltage range.

** UL output ratings below 75 dBA are for NFPA 72 Private Mode applications.

† ULC output ratings below 85 dBA are for use in applications per applicable local codes.

Sound Output Dispersion per ULC S541 Anechoic Testing	Horizontal	-3 dBA @ ±37°	-6 dBA @ ±40°	-9.4 dBA @ ±90°
	Vertical	-3 dBA @ -24°, +42°	-6 dBA @ -59°, +50°	-8.6 dBA @ ±90°

General Specifications

Temperature Range	32° to 122° F (0° to 50° C)
Humidity Range	10% to 93%, non-condensing @ 104° F (40° C)
Connections	Terminal blocks on mounting plate for 18 AWG to 12 AWG (0.82 mm^2 to 3.31 mm^2); two wires per terminal for in/out wiring
Installation Instructions	579-1156 for 49MTV Series A/V appliances 579-1100 for 49MP Series mounting plates

TYCO, SIMPLEX, and the product names listed in this material are marks and/or registered marks. Unauthorized use is strictly prohibited. NFPA 72 and National Fire Alarm Code are trademarks of the National Fire Protection Association (NFPA).

© 2016 Tyco Fire Protection Products. All rights reserved. All specifications and other information shown were current as of document revision date and are subject to change without notice.

RSN: 1654836
Permit # 2022-2207219 -LT
Sheet 27 of 36

Simplex

*UL, ULC, CSFM Listed; FM Approved**

TrueAlert ES Addressable Notification Appliances

Visible Notification Appliances, Wall Mount Multi-Candela Strobes, Model Series 49VO

Features

Individually addressed and controlled multi-candela TrueAlert ES V/O (visible only) notification appliances provide:

- Multi-candela xenon strobe with synchronized 1 Hz flash rate and with intensity ***programmable from the control panel*** or jumper selected as 15, 30, 75, 110, 135, or 185 cd
- Advanced addressable notification controlled by **IDNAC SLCs** providing *regulated 29 VDC* allowing strobes to operate with lower current even under battery backup
- Wiring supervision to each appliance allowing "T-tapped" connections for Class B circuits to simplify wiring (Class A circuits require in/out wiring)
- *Self-Test Mode* allows an on-board sensor to detect the strobe output and then report its status to the control panel
- *TrueAlert Device Reports* at the control panel detailing appliance point ID, custom label, type, and candela setting
- *Magnet Test diagnostics* to assist checkout and testing of appliances and wiring and *Electrical test point access* without removing cover
- Compatibility with ADA requirements; (refer to Installation Reference)
- Compatibility with legacy TrueAlert addressable systems for upgrade and replacement (see TrueAlert ES Strobe LEGACY Compatibility Reference)
- Listed to UL Standard 1971 and ULC Standard S526

LED Indicator and Magnet Test feature:

- Appliance LED can be selected to display each polling cycle to indicate appliance supervision
- When the controller is in diagnostic mode, the Magnet Test pulses the LED to indicate appliance address and can be set to also briefly flash the strobe

Mechanical design features include:

- Rugged, high impact, flame retardant thermoplastic housing in red with white letters or white with red letters, with clear lens, available with FIRE, ALERT, FEU, FEU/FIRE, or blank lettering
- Separate covers are available to change appliance type on-site or for replacement; covers can be easily removed without disturbing the connected housing and avoiding trouble conditions
- A separate mounting plate allows wiring to be completed before appliance is mounted; use with single gang, double gang, or 4-inch square box, flush or surface mount
- In/out wiring terminals for 18 AWG to 12 AWG
- Optional mounting adapters are available to cover surface mounted electrical boxes and to adapt to Simplex, 2975-9145 boxes
- Optional red wire guards (see Product Selection)

Description

TrueAlert ES addressable strobes

TrueAlert ES addressable strobes are individually addressed visible notification appliances that receive power, supervision, and control signals from the Simplex fire alarm control panel providing **IDNAC** Signaling Line Circuits (SLCs). (See IDNAC SLC Controller Compatibility Reference.)

Strobe Application Reference

Proper selection of visible notification is dependent on occupancy, location, local codes, and proper applications of: the *National Fire Alarm Code* (NFPA 72), ANSI A117.1; the appropriate model building code: BOCA, ICBO, or SBCCI; and the application guidelines of the Americans with Disabilities Act (ADA).

Figure 1: TrueAlert ES Addressable Strobes are Available in Red with White Lettering and White with Red Lettering

TrueAlert ES Operation Advantage

TrueAlert ES addressable appliances on IDNAC SLCs provide separate visible (and audible) notification using a single two-wire circuit that also *confirms connection to the individual notification appliance's electronic circuit*. This operation increases circuit supervision integrity by providing supervision that extends beyond the appliance wiring connections.

Reduced current allows efficient IDNAC SLC operation. With *IDNAC SLCs*, a *constant* 29 VDC source voltage is maintained, even during battery standby, allowing strobes to operate at higher voltage with lower current and ensuring a consistent current draw and voltage drop margin under both primary power and secondary battery standby. Efficiencies include wiring distances up to 2 to 3 times farther than with conventional notification, or support for more appliances per IDNAC SLC, or use of smaller gauge wiring, or combinations of these benefits, all providing installation and maintenance savings with high assurance that appliances that operate during normal system testing will operate during worst case alarm conditions.

Reducing Installation and Testing Time. With separate controls on the same two-wire SLC, installation time and expense for both retrofit and new construction can be significantly reduced. When Class B wiring is used, *wiring can be "T" tapped*, allowing more savings in distance, wire, conduit (size and utilization), and overall installation efficiency. Use of Self-Test and Magnet Test features improves installation efficiency. TrueAlert device reports conveniently identify information about each connected appliance.

* These products have been approved by the California State Fire Marshal (CSFM) pursuant to Section 13144.1 of the California Health and Safety Code. See CSFM Listing 7125-0026:0373 for allowable values and/or conditions concerning material presented in this document. Additional listings may be applicable; contact your local Simplex product supplier for the latest status. Listings and approvals under Simplex Time Recorder Co. are the property of Tyco Fire Protection Products.

RSN: 1654836
Permit # 2022-220[illegible]
Sheet 28 of 36

TrueAlert ES Diagnostics

Test Features. When IDNAC SLCs are in diagnostic mode, ***Self-Test*** and ***Magnet Test*** features provide individual appliance testing. With the ***Self-Test*** feature, ***appliance operation can be confirmed without leaving the control panel***. Additionally, each appliance's LED can be selected to pulse when it receives a supervision poll during normal operation.

Self-Test Details. Selecting Self-Test Mode from the control panel allows on-board sensors, depending on the device type, to detect its own strobe and/or horn output and then report their status to the control panel. Operation is by selected VNAC appliance groups and is either automatic (all briefly simultaneously activated) or individually activated by applying a magnet (Refer to control panel data sheet for more Self-Test information, see IDNAC SLC Controller Compatibility Reference).

Silent Appliance Magnet Test. In this test mode, in response to application of a magnet, the appliance LED pulses sequentially to conveniently indicate the appliance's address.

Operational Appliance Magnet Test. In this test mode, after the address is indicated by pulsing the appliance LED, the strobe will briefly flash to indicate proper operation.

TrueStart Instrument Two (TSIT). The 2nd generation of the Simplex TrueStart Test Instrument adds testing of IDNAC SLC wiring and TrueAlert ES appliances to its ability to test IDCs, NACs, and IDNet communications ***before connection to the control panel***. Please contact your local Simplex representative for additional information.

TrueAlert Addressable Wiring Isolator

Isolator Model 4905-9929 is available for remote mounting on TrueAlert addressable circuits to isolate short circuited wiring from functioning wiring. (See data sheet *S4905-0001* .)

Installation Reference

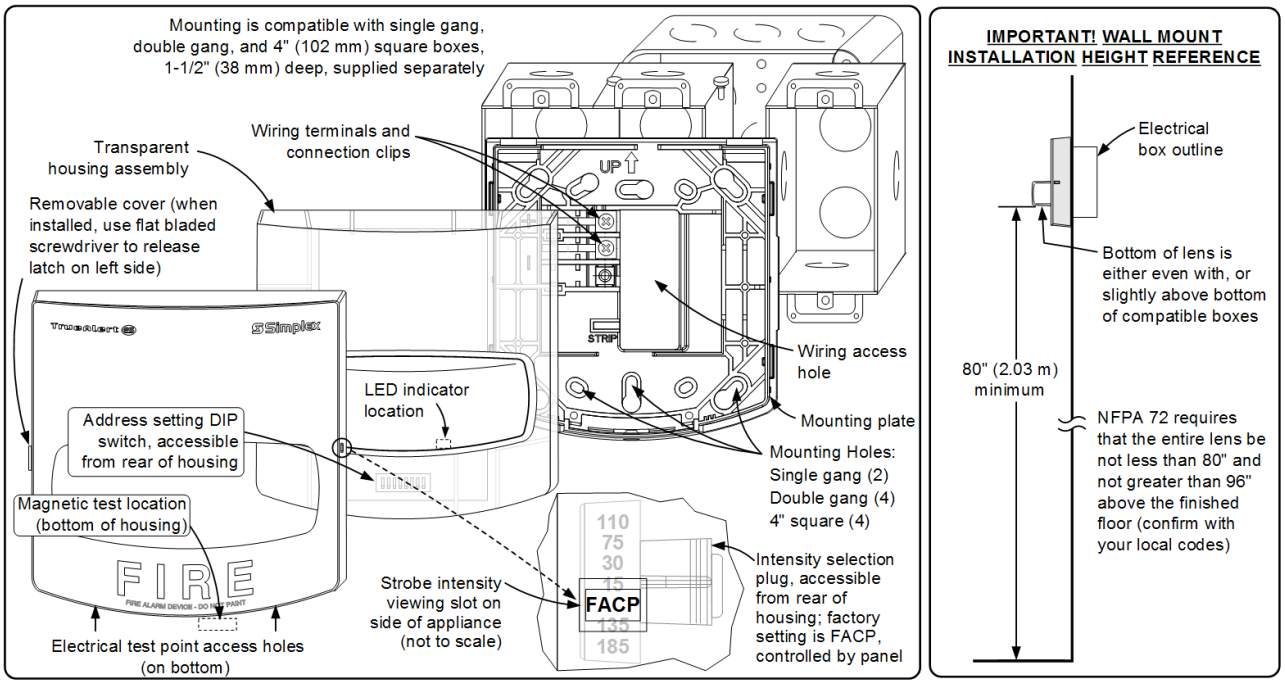

Figure 2: Installation Reference

Adapter Plate and Surface Mount Installation Reference

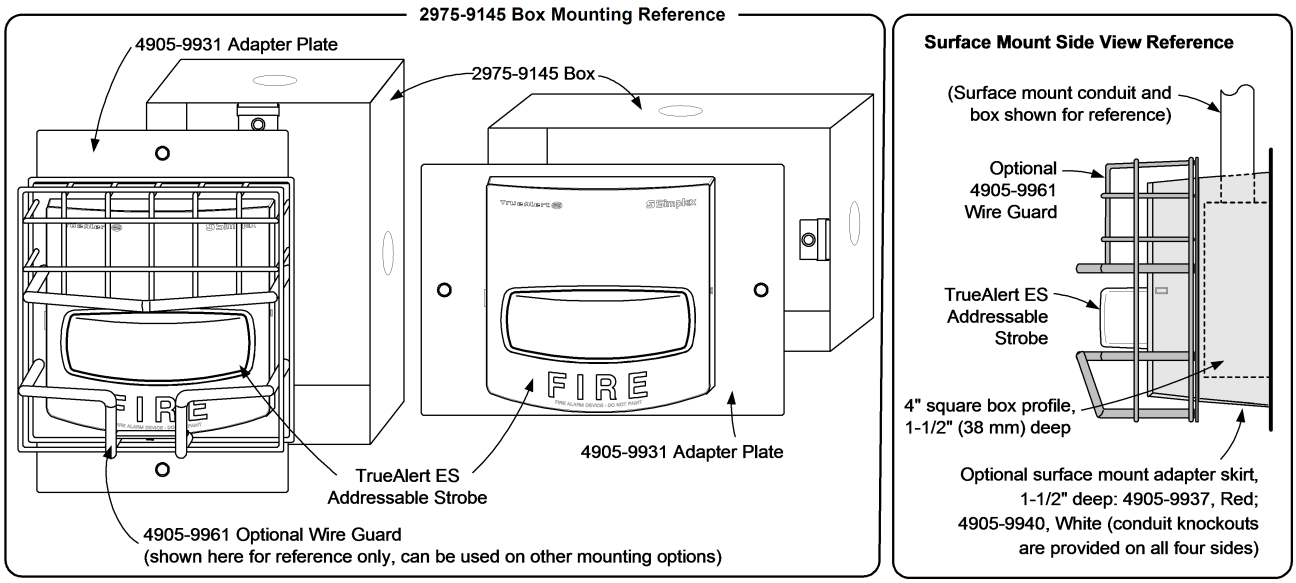

Figure 3: Adapter Plate and Surface Mount Installation Reference

The 2975-9145 box is shown mounted to the 4905-9931 Adapter Plates. Also shown is the optional surface mount adapter skirt (available in red 4905-9937 or white 4905-9940)., as well as the 4905-9961 optional wire guard.

Product Selection

Table 1: TrueAlert ES Wall Mount Addressable Strobes

SKU*	Cover Color	Wording	Lens Color
49VO-WRF 49VO-WRF-BA	Red	FIRE	Clear
49VO-WWF 49VO-WWF-BA	White		
49VO-WRA 49VO-WRA-BA	Red	ALERT	
49VO-WWA 49VO-WWA-BA	White		
49VO-WRQ	Red	FEU	
49VO-WWQ	White		
49VO-WRS 49VO-WRS-BA	Red	Simplex logo only	
49VO-WWS 49VO-WWS-BA	White		
49VO-APPLW 49VO-APPLW-BA	Select cover and mounting plate separately		
TrueAlert ES addressable VO (strobe) appliances include cover and matching mounting plate except as noted; Dimensions with Cover = 5 ⅛" H x 5" W x 2 ⅝" D (130 mm x 127 mm x 67 mm)			

Table 2: Separate Mounting Plate

Model	Color	Note
49MP-AVVOWR	Red	Mounting Plate **is required** when ordering model 49VO-APPLW(-BA)
49MP-AVVOWW	White	

Table 3: Separate Covers (Required when ordering model 49VO-APPLW(-BA))

SKU*	Color	Wording
49VOC-WRFIRE	Red	FIRE
49VOC-WWFIRE	White	
49VOC-WRALT	Red	ALERT
49VOC-WWALT	White	
49VOC-WRFEU	Red	FEU
49VOC-WWFEU	White	
49VOC-WRBLNG	Red	FEU/FIRE
49VOC-WWBLNG	White	
49VOC-WRS	Red	Simplex logo only
49VOC-WWS	White	

Table 4: Mounting Adapters and Wire Guard

Model	Color	Description	Dimensions
4905-9937	Red	Surface Mount Adapter Skirt	5 ⅜" H x 5 ¼" W x 1 ⅝" D (136 mm x 133 mm x 41 mm) Total depth with strobe = 4 ⅜" (111 mm)
4905-9940	White		
4905-9931	Red Adapter Plate for mounting to Simplex, 2975-9145 Box (typically for retrofit, mount vertical or horizontal)		8 5/16" x 5 ¾" x 0.060" Thick (211 mm x 146 mm x 1.5 mm)
2975-9145	Red Mounting Box, requires 4905-9931 Adapter Plate		7 ⅞" x 5 ⅛" x 2 ¾" D (200 mm x 130 mm x 70 mm)
4905-9961	Red wire guard with mounting plate, compatible with semi-flush or surface mount boxes		6 1/16" H x 6 1/16" W x 3 ⅛" D (154 mm x 154 mm x 79 mm)

RSN: 1654836
Permit # 2022-220[illegible]
Sheet 31 of 36

IDNAC SLC Controller Compatibility Reference

Compatible Controllers	Data Sheet Reference	Controller Output	IDNAC SLC Output Voltage	Appliance Voltage Design Reference
4100ES with EPS+ or EPS Power Supply	*S4100-0100*	IDNAC SLC	29 VDC (regulated)	23 VDC (with 6 VDC drop)
4009 IDNAC Repeater	*S4009-0004*			
4007ES with IDNAC Notification	*S4007-0002*			
4010ES with ESS Enhanced System Supply	*S4010-0011*			

TrueAlert ES Strobe Specifications

Table 5: Electrical Ratings

Specification	Rating
Typical Operating Voltage Range	23 VDC to 31 VDC, Special Application (see below for 17 VDC rating)
Supervisory Requirements	1 unit load (= 0.8 mA control panel current)
IDNAC SLC Loading	Maximum of 127 addresses per SLC, 139 unit loads

Table 6: Candela Setting

Candela	15 cd	30 cd	75 cd	110 cd	135 cd	185 cd
23 VDC RMS Current Ratings, for typical design of IDNAC Addressable SLCs (6 VDC drop)	47 mA	57 mA	100 mA	132 mA	160 mA	208 mA

Table 7: General Specifications

Temperature Range	32° to 122° F (0° to 50° C)
Humidity Range	10% to 93%, non-condensing @ 104° F (40° C)
IDNAC SLC Wiring Specifications (refer to control panel installation instructions for more information)	UTP, unshielded twisted pair recommended
	Maximum wire length allowed with "T-Taps" for Class B wiring per SLC = 10,000 ft (3048 m)
	Maximum wire length to any appliance = 4000 ft (1219 m)
Connections	Terminal blocks on mounting plate for 18 AWG to 12 AWG (0.82 mm2 to 3.31 mm2); two wires per terminal for in/out wiring
Installation Instructions	579-1031
Note: Refer to compatibility table above for fire alarm control panel and power supply operation type.	

RSN: 1654836
Permit # 2022-220[illegible]
Sheet 32 of 36

TrueAlert ES Strobe LEGACY Compatibility Reference

Table 8: Compatibility Reference

Compatible Controller	Data Sheet Reference	Controller Output	Available Strobe Intensity	Appliance Voltage Minimum
4100ES or 4100U with TrueAlert Power Supply	*S4100-0031*	TrueAlert Addressable SLC	15, 30, 75, and 110 cd	17 VDC
4009 TPS, Remote TrueAlert Power Supply	*S4100-0037*			
TrueAlert Addressable Controller (4009T)	*S4009-0003*			

Table 9: Electrical Ratings Reference for Retrofit Applications

Voltage Range	**17 VDC to 31 VDC, Special Application**			
Candela Setting	**15 cd**	**30 cd**	**75 cd**	**110 cd**
17 VDC RMS Current Ratings, use when connected to TrueAlert Addressable SLCs per above	62 mA	75 mA	133 mA	178 mA

© 2018 Johnson Controls. All rights reserved. All specifications and other information shown were current as of document revision and are subject to change without notice. Additional listings may be applicable, contact your local Simplex® product supplier for the latest status. Listings and approvals under Simplex Time Recorder Co. Simplex, and the product names listed in this material are marks and/or registered marks. Unauthorized use is strictly prohibited. NFPA 72 and National Fire Alarm Code are registered trademarks of the National Fire Protection Association (NFPA).

RSN: 1654836
Permit # 2022-2207219 -LT
Sheet 33 of 36

Description

Ceiling mount addressable visible (V/O) notification appliances are individually powered, addressed, and controlled from a Simplex fire alarm control unit (FACU) IDNAC Signaling Line Circuit (SLC). V/O notification appliances use a multi-candela strobe with synchronized 1 Hz flash rate and selectable candela rating. Xenon tube strobes devices are interoperable on the same IDNAC channel. Separate appliance and cover selection greatly simplifies the ordering and installation process.

Features

Individually addressed visible only (V/O) notification appliances

- Multi-candela Xenon strobe available in low: 15 cd, 30 cd, 75 cd, and 110 cd; and high: 110 cd , 135 cd, and 185 cd range candela models
- Small compact design and low current draw due to energy efficient Xenon tube strobes, with LED indicators
- Advanced addressable notification controlled by IDNAC SLCs.
- IDNAC SLCs provide regulated 29 VDC allowing horns to operate with lower current
- Electrical test point access by removing the cover
- Strobe intensity can be programmed from the FACU or the device
- Wiring supervision to each appliance allows T-tapped connections for Class B circuits to simplify wiring. Class A circuits require in/out wiring
- Self-Test Mode allows on-board sensors to detect the strobe output and then report their status to the FACU
- TrueAlert Device Reports at the FACU detail appliance point ID, custom label, type, and candela setting
- Magnet test diagnostics assist checkout and testing of appliances and wiring
- Compatibility with ADA requirements
- Strobe operation is listed to UL Standard 1971 and ULC Standard S526
- Synchronized strobe operation on its IDNAC channel

LED indicator and magnet test feature:

- Indicator LED indicates magnet test acknowledgment, 3 digit IDNAC address, and candela rating
- Indicator LED can be configured to blink every polling cycle to indicate appliance supervision
- When the controller is in diagnostic mode, the magnet test pulses the Indicator LED to indicate appliance address and can be set to also briefly flash the strobe LEDs

Mechanical design features

- Rugged, high impact, flame retardant thermoplastic housing in red and white colors
- Various covers and lettering options available – Red with white letters or white with red letters
- Covers can be easily removed without disturbing the connected housing and avoiding trouble conditions
- In/out wiring terminals for 18 AWG to 12 AWG
- Mounts on 4 in. square or single gang USA electrical boxes. Adapter plate required for mounting on single gang electrical boxes
- Optional wire guards
- Weatherproof back boxes are required for surface mounting

Figure 1: Indoor ceiling mount strobe

Strobe application reference

Proper selection of visible notification is dependent on occupancy, location, local codes, and proper applications of: the National Fire Alarm and Signaling Code (NFPA 72), ANSI A117.1; the appropriate model building code: BOCA, ICBO, or SBCCI; and the application guidelines of the Americans with Disabilities Act (ADA).

TrueAlert addressable wiring isolator

Isolator model 4905-9929

Isolator model 4905-9929 is available for remote mounting on TrueAlert addressable circuits to isolate short circuited wiring from functioning wiring. Refer to data sheet *TrueAlert Addressable Isolator+ Module, Model 4905-9929 S4905-0001* for additional information.

TrueAlert ES diagnostics

Test features

Controllers can be selected to pulse each appliance's LED when it receives a supervision poll. When the controller is selected for diagnostic mode, the appliance magnet test feature provides a response at the individual appliance being tested.

Silent appliance magnet test

The appliance LED pulses sequentially to conveniently indicate the appliance's address when a magnet is applied.

Operational appliance magnet test

In this test mode, after the address is indicated by pulsing the appliance LED, the strobe will briefly flash to indicate proper operation.

TrueStart instrument two (TSIT)

The 2nd generation of the Simplex TrueStart Test Instrument adds testing of IDNAC SLC wiring and TrueAlert ES appliances to its ability to test IDCs, NACs, and IDNet communications before connection to the FACU. Contact your local Simplex representative for additional information.

* Additional listings may be applicable; contact your local Simplex product supplier for the latest status. Listings and approvals under Simplex Time Recorder Co.

RSN: 1654836
Permit # 2022-220[illegible]
Sheet 34 of 36

Installation reference

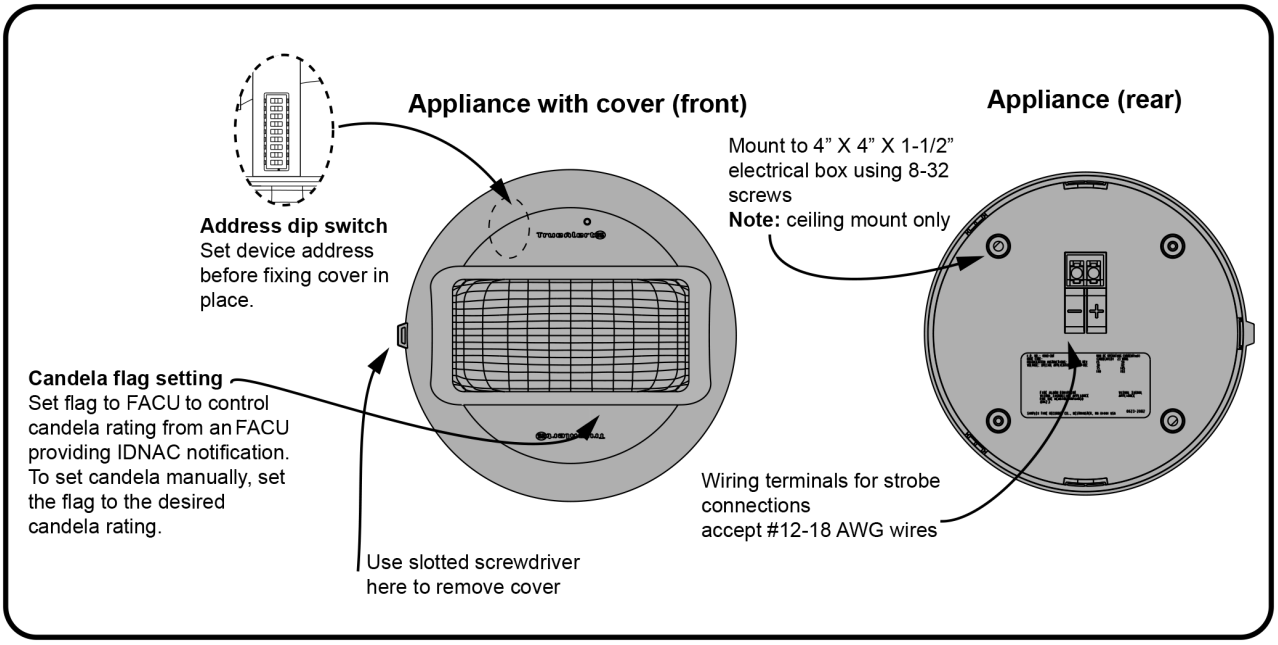

Figure 2: Indoor Ceiling Mount Strobe installation

IDNAC SLC operation advantage

TrueAlert Addressable visible appliances on IDNAC SLCs

TrueAlert Addressable visible appliances on IDNAC SLCs provide visible notification using one two-wire circuit that also confirms connection to the individual notification appliance's electronic circuit. This operation increases circuit supervision integrity by providing supervision that extends beyond the appliance wiring connections.

Reduced current usage on IDNAC SLCs

A constant 29 VDC source voltage is maintained, even during battery standby. This allows appliances to operate at higher voltage with lower current and ensuring a consistent current draw and voltage drop margin under both primary power and secondary battery standby. Efficiencies include wiring distances up to 2 to 3 times farther than with conventional notification, support for more appliances per IDNAC SLC, use of smaller gauge wiring, or combinations of these benefits.

Reducing Installation and Testing Time

With separate controls on the same two-wire SLC, installation time and expense for both retrofit and new construction can be significantly reduced. When Class B wiring is used, wiring can be T-tapped, allowing more savings in distance, wire, conduit size and utilization, and overall installation efficiency. Use of the magnet test feature improves installation efficiency. TrueAlert device reports conveniently identify information about each connected appliance.

Product selection

Table 1: Ceiling mount addressable visual only V/O appliances

Model*	Lens color	Description	Installation Instructions
49VO-APPLC 49VO-APPLC-BA	Clear	VO appliance only. Select cover separately.	579-1227
49VOH-APPLC 49VOH-APPLC-BA			
49VOH-APPLCA-BA	Amber		
49VOH-APPLCB-BA	Blue		
49VOH-APPLCG	Green		579-1280
49VOH-APPLCR	Red		

Table 2: Surface/WP back boxes

Model	Color	Description	Installation instructions
49WPBB-VOCR	Red	Surface/WP back box in red	579-1270
49WPBB-VOCW	White	Surface/WP back box in white	

Note: Use WP back boxes for surface mounting only. Using weatherproof back boxes does not make an appliance weatherproof.

RSN: 1654836
Permit # 2022-220
Sheet 35 of 36

Table 3: Adapter plates

Model	Description	Installation Instructions
49VO-APCS	VO Ceiling Mount Adapter Plate. Required for mounting on a single gang electrical box.	579-1227

Table 4: V/O covers (required when ordering APPLC models)

Model*	Color	Wording
49VOC-CRALT	Red	ALERT
49VOC-CRBF		FEU/FIRE
49VOC-CRFEU		FEU
49VOC-CRFBL		FUEGO/FOGO
49VOC-CRF		FIRE
49VOC-CRS		Simplex logo only
49VOC-CRBAA		إنذار/ALERT
49VOC-CRBCF		火警/FIRE
49VOC-CRBAF		حريق/FIRE
49VOC-CK	Black	Blank
49VOC-CWALT	White	ALERT
49VOC-CWBF		FEU/FIRE
49VOC-CWFEU		FEU
49VOC-CWF		FIRE
49VOC-CWS		Simplex logo only
49VOC-CWBAA		إنذار/ALERT
49VOC-CWBCF		火警/FIRE
49VOC-CWBAF		حريق/FIRE

Table 5: Wire guards

Model	Description
49WG-VOCR	VO Ceiling Mount Red Wire Guard
49WGBB-VOCR	VO Ceiling Mount Wire Guard Back Box

Note: * (-BA) indicates model is available either with or without the -BA suffix. Model numbers ending in –BA are assembled in the USA

IDNAC SLC controller compatibility reference

Table 6: Compatibility reference

Compatible Controllers	Data Sheet Reference	Controller Output	IDNAC SLC Output Voltage	Appliance Voltage Design Reference
4100ES with EPS+ or EPS Power Supply	S4100-0100	IDNAC SLC	29 VDC (regulated)	23 VDC (with 6 VDC drop)
4009 IDNAC Repeater	S4009-0004			
4100ES Flex 35, 50, and 100 Amplifiers	S4100-0034			
4100ES Constant Supervision and Signal Cards				
Note: See TrueAlert ES V/O LEGACY compatibility reference for 17 VDC ratings				

Ceiling mount V/O specifications

Table 7: Specifications

Specification	Rating
Environmental	32°F to 120°F (0°C to 49°C); 10% to 93%, non-condensing at 104°F (40°C)
Connections	Terminal blocks for 18 AWG to 12 AWG (0.82 mm^2 to 3.31 mm^2); two wires per terminal for in/out wiring. Use Unshielded Twisted Pair (UTP) for IDNAC.
IDNAC SLC Loading	Maximum of 127 addresses per SLC, 139 unit loads. See device and compatible FACU Installation Instructions for circuit current load limits.

Table 8: Percentage of rated light output at room temperature

Angle	On-Axis	Vertical, Below Axis		Horizontal, Left/Right of Axis	
	0°	45°	90°	45°	90°
UL required output	100%	45%	25%	45%	25%
Typical output	327%	134%	83%	129%	47%

RSN: 1654836
Permit # 2022-220
Sheet 36 of 36

Table 9: Appliance specifications

Specification		Rating						
Operating Voltage Range		23 VDC to 30 VDC, Special Application						
Supervisory Requirements		1 unit load (= 0.8 mA FACU current)						
Flash Rate and Synchronized SLC Loading		1 Hz; with up to 63 synchronized strobes maximum per powered circuit, max 127 S/V appliances per IDNAC channel						
Current consumption, see note	**Candela Setting**	**15 cd**	**30 cd**	**75 cd**	**90/95 cd**	**110 cd**	**135 cd**	**185 cd**
	49VO model	55 mA	83 mA	153 mA	N/A	199 mA	N/A	N/A
	49VOH model	N/A	N/A	N/A	N/A	253 mA	296 mA	377 mA
	49VOH amber lens	N/A	N/A	N/A	253 mA (90 cd)	296 mA	377 mA	N/A
	49VOH blue lens	N/A	N/A	253 mA	296 mA (95 cd)	377 mA	N/A	N/A
Note: Measured at 23 VDC on IDNAC Addressable SLC								

TrueAlert ES V/O LEGACY compatibility reference

Table 10: Compatibility reference

Compatible Controller	Data Sheet Reference	Controller Output	Available Strobe Intensity	Appliance Voltage Minimum
4100ES or 4100U with TrueAlert Power Supply	S4100-0031	TrueAlert Addressable SLC	15 cd, 30 cd, 75 cd, and 110 cd	17 VDC
4009 TPS, Remote TrueAlert 17 VDC Power Supply, see note.	S4100-0037			
TrueAlert Addressable Controller (4009T)	S4009-0003			
Electrical ratings differences for legacy applications, see IDNAC SLC controller compatibility reference for 29 VDC ratings				
Voltage Range		17 VDC to 31 VDC, Special Application		
Candela Setting	**15 cd**	**30 cd**	**75 cd**	**110 cd**
17 VDC RMS Current Ratings, with horn on continuous at high setting, use when connected to TrueAlertAddressable SLCs per above	73 mA	114 mA	210 mA	269 mA

Note: * For connection to legacy fire panel models Simplex 4009T and 4100/TPS. High candela (49VOH) appliances are not compatible with Simplex models 4009T and TPS, see the fire panel compatibility charts.

© 2021 Johnson Controls. All rights reserved. All specifications and other information shown were current as of document revision and are subject to change without notice. Additional listings may be applicable, contact your local Simplex® product supplier for the latest status. Listings and approvals under Simplex Time Recorder Co. Simplex, and the product names listed in this material are marks and/or registered marks. Unauthorized use is strictly prohibited. NFPA 72 and National Fire Alarm Code are registered trademarks of the National Fire Protection Association (NFPA).