RSN: 1578633
Permit # 2021-2051722-LT
Sheet 1 of 13

1400 SOUTH POTOMAC STREET

FIRE ALARM SYSTEM SHOP DRAWINGS FOR:

BUILDING CLASSIFICATIONS AND CODES

OCCUPANCY GROUP:	B
USE:	BUSINESS
CONSTRUCTION TYPE:	II-B
STORIES:	2 FLOORS
SPRINKLERED:	FULLY SPRINKLED
APPLICABLE CODES:	2015 IBC 2013 NFPA 72 2015 IFC 2020 NFPA 70 2015 IMC

SYSTEM TYPE AND MONITORING

SYSTEM CLASSIFICATION:	(NFPA 72, CHAPTER 26), REMOTE STATION
SYSTEM TYPE:	ADDRESSABLE
WIRING CLASSIFICATION:	NAC – CLASS B SLC – CLASS B COMMUNICATION RISER – CLASS B
NOTIFICATION TYPE:	TEMPORAL PATTERN
MONITORING:	THIS SYSTEM IS AND WILL CONTINUE TO BE MONITORED BY A REMOTE SUPERVISING STATION, PER NFPA 72 CHAPTER 26, SECTION 3.

SCOPE OF WORK

PROVIDE THE FOLLOWING FIRE ALARM SYSTEM MODIFICATIONS TO ACCOMMODATE THE PROPOSED CONSTRUCTION FOR THE ALLPRIA PROJECT IN SUITE 150 LOCATED AT 1400 SOUTH POTOMAC STREET:

PARTS

1. PROVIDE AND INSTALL THREE (3) NEW HORN/STROBES
2. REPLACE TWO (2) EXISTING HORN/STROBES WITH NEW HORN/STROBES
3. PROVIDE AND INSTALL EIGHTEEN (18) NEW STROBES
4. REPLACE THREE (3) EXISTING STROBES WITH NEW STROBES

INDEX

FA-00 COVER PAGE
SCOPE OF WORK
GENERAL INFORMATION
BUILDING REQUIREMENTS AND CODES

FA-01 FIRE ALARM PLAN
LEGEND
KEY MAP
GENERAL NOTES
MOUNTING HEIGHTS

FA-02 CALCULATIONS
VOLT DROP
BOOSTER CALCULATIONS
ONE-LINE RISER DIAGRAM
WIRE CODE CHART
MATRIX – SEQUENCE OF OPS

PROJECT:

ALLPRIA
1400 SOUTH POTOMAC STREET
AURORA, CO 80012

OWNER/GC:

CODA CONSTRUCTION
444 LIPAN ST.
DENVER, CO 80204
PH:(303)757-3033
FAX:(303)757-3083
JOE HANSON

FIRE ALARM CONTRACTOR:

FIRE ALARM SERVICES, INC.
4800 W. 60TH AVENUE
ARVADA, CO 80003
PH:(303)466-8800
FAX:(303)466-8820
SHANNON SMITH

ARCHITECT:

DAVIS PARTNERSHIP ARCHITECT
2901 BLAKE ST.
DENVER, CO 80205
PH:(303)861-8555

FIRE ALARM DESIGNER:

FIRE ALARM SERVICES, INC.
4800 W. 60TH AVENUE
ARVADA, CO 80003
PH:(303)466-8800
FAX:(303)466-8820
BRITAINY COWDEN
BRITAINYC@FIREALARMSERVICES.COM

Fire Alarm SERVICES, INC.

Fire Alarm Services, Inc.
4800 W. 60th Avenue
Arvada, CO 80003

(303)466-8800 (Phone)
(303)466-8820 (Fax)
contactus@fasonline.cc (E-Mail)
www.fasonline.cc

COA Adopted Codes for this project:
ICC-2015 - NEC-2020
NFPA 13-2013 - NFPA 72-2013
COA Amendments 22 & 66

Provide a full size set of legible approved construction documents **PRINTED IN COLOR** for review by the Field Inspector.

Code violations that are found during inspection are required to be corrected. Permit issuance does not grant approval of a code violation.

Field Inspection consultation is available upon request; call (303) 739-7420 to schedule a consultation.

City of Aurora Building Division
Project: *ALLPRIA*
Address: *1400 S POTOMAC ST UNIT 150*
Occupancy Group: *IBC B*
Construction Type: *IBC IIB SPK*
RSN: *1578633*
Permit: *2021-2051722-LT*

City of Aurora Building Division
Reviewed for Code Compliance
Approved as Noted *M. Apodaca*
Date: *Oct 05, 2021*
2015 INTERNATIONAL CODES & 2020 NEC

Raymond P. Breeland
Certification Expires 04/01/22
Fire Alarm Systems Level III
NICET Certification #111006
Date: 9/24/2021

Fire Alarm SERVICES, INC.
4800 W. 60TH AVENUE
ARVADA, CO 80003
phone: 303-466-8800
fax: 303-466-8820
www.fasonline.cc email: contactus@fasonline.cc

REVISIONS		
NO.	DATE	
1	9/24/21	REV1 - Matrix/Ceiling Height

DRAWN BY: B. COWDEN
DATE: 8/25/2021
APPR. BY:
DATE:

PROJECT TITLE: FIRE ALARM SYSTEM TENANT FINISH FOR: ALLPRIA
BUILDING NAME & ADDRESS: 1400 SOUTH POTOMAC ST AURORA, CO 80012
PROJECT NUMBER: 2114205

FIRE ALARM & DETECTION SYSTEM
DRAWING TITLE: SUITE 150 COVER PAGE
SCALE: N/A

PROJECT SHEET TITLE
FA-00

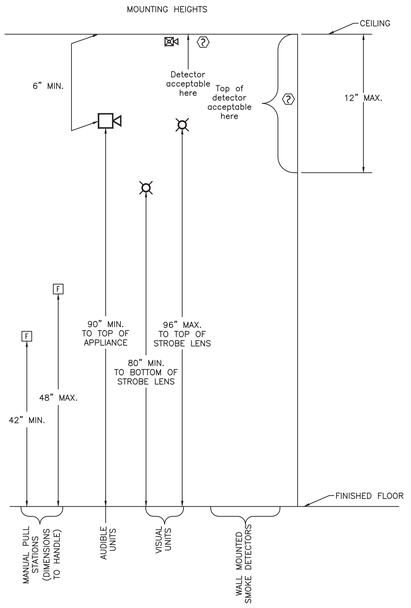

FIRE ALARM SYMBOLS LEGEND

EXISTING	DESCRIPTION	PROPOSED
	STROBE – Wall Mount or CM = Ceiling Mount	
	SMOKE DETECTOR – x = photo, ion	
	Speaker/strobe – Wall Mount or Ceiling Mount	
S	Speaker only = Wall Mount or CM = Ceiling Mount	S
	Horn/strobe – Wall Mount or Ceiling Mount	
H	Horn only = Wall Mount or CM = Ceiling Mount	H
	REMOTE LED	
EOL	END OF LINE RESISTOR	EOL
NACN	BOOSTER PANEL	NACN
F	PULL STATION	F
	FIREMAN'S PHONE JACK	
	HEAT DETECTOR – x =135, 200, ROR	
WF	FLOW SWITCH	WF
TS	TAMPER SWITCH	TS
	DUCT DETECTOR – x = photo, ion	
MM	RELAY MODULE	MM
MM	MONITOR MODULE	MM

NOTIFICATION APPLIANCE CIRCUIT NUMBER
NOTIFICATION APPLIANCE PANEL NUMBER — DEVICE NUMBER

NAC1-2-3

POWER EXPANDER NUMBERING

	SPEAKER LINE "A"	SPEAKER LINE "B"	

RL = RELOCATED DEVICES
RR = REMOVE AND REINSTALL
RPL = REMOVE AND REPLACE
J = J-BOX

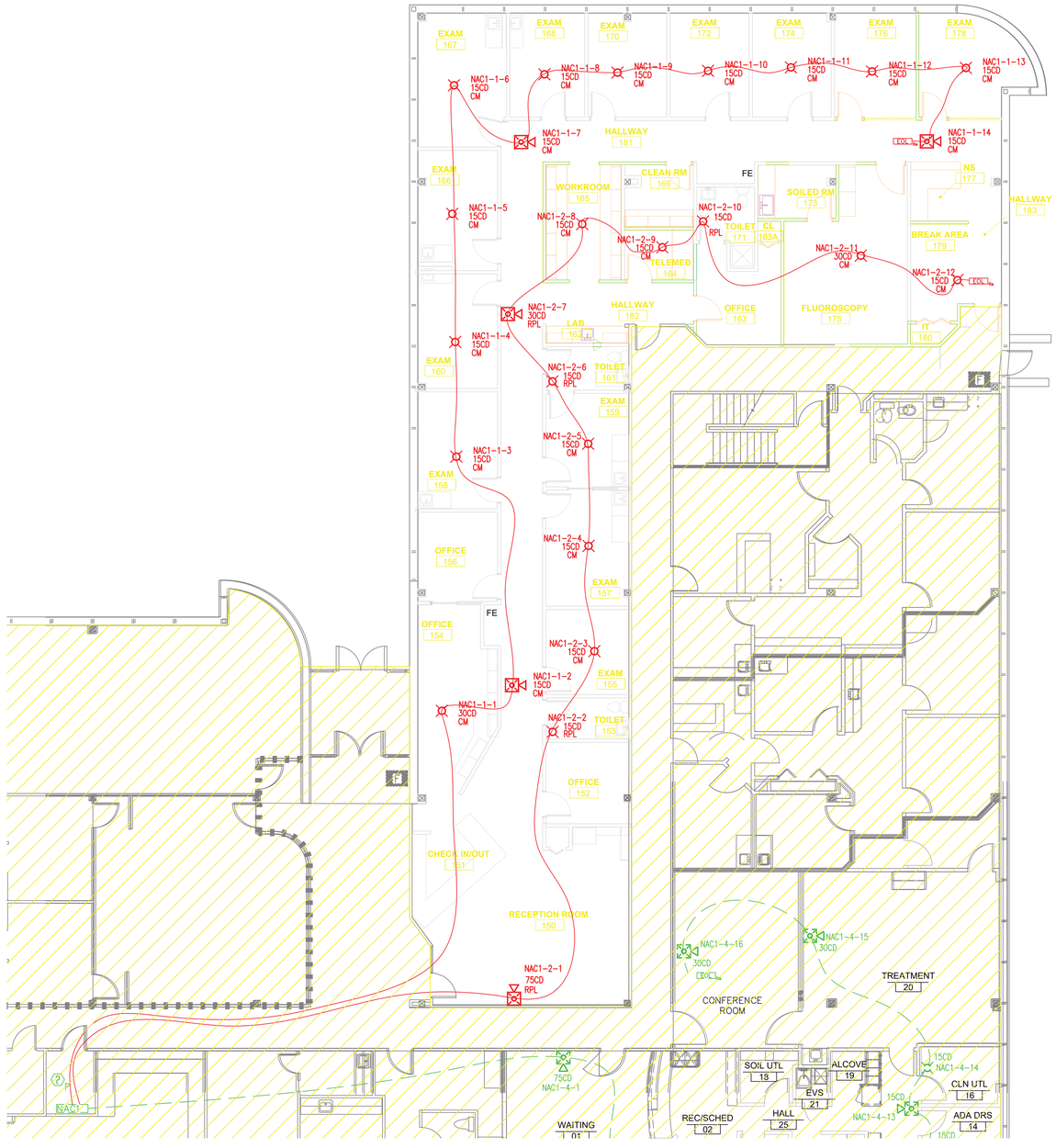

SUITE 150 FIRE ALARM PLAN

SCALE: 1/8" = 1'-0"

NORTH 0 5 10 15 30 FEET

GENERAL NOTES:

1. ROUGH–IN INSPECTION IS REQUIRED FOR ALL WORK ON FIRE ALARM SYSTEMS. PRIOR TO INSPECTION, DO NOT INSTALL:– DEVICES (DETECTORS, PULL STATIONS, STROBES, ETC.) – CEILING TILES OR WALLBOARD WHICH CONCEAL CABLES OR OTHER WIRING METHODS.– COVERS ON CABINETS, JUNCTION OR SPLICE BOXES, DEVICE BACKBOXES, ETC.
2. SYSTEM WIRING SHALL COMPLY WITH NATIONAL ELECTRICAL CODE. ARTICLE 760 (NEC) AND 2013 NFPA 72.
3. THE CEILING IN ALL AREAS IS A TYPICAL 9' A.F.F. DROPPED CEILING WITH NO SLOPES.

1

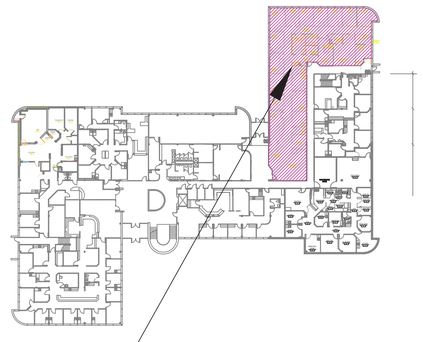

SCOPE OF WORK

KEY MAP
SCALE: NOT TO SCALE
NORTH

City of Aurora Building Division
Reviewed for Code Compliance
Approved as Noted: M. Apodaca
Date: Oct 05, 2021
2015 INTERNATIONAL CODES & 2020 NEC

Audible/Visual occupant notification device spacing shall be field verified for compliance in Public Use/Common Use Areas. Exam rooms and shared offices are examples of Public Use/ Common Use Areas. 2015 IFC 907.5

Raymond P. Breeland
Certification Expires 04/01/22
Fire Alarm Systems Level III
NICET Certification #111006
Date: 9/24/2021

Fire Alarm SERVICES, INC.
4800 W. 60TH AVENUE
ARVADA, CO 80003
phone: 303–466–8800
fax: 303–466–8820
www.fasonline.cc email: contactus@fasonline.cc

REVISIONS		
NO.	DATE	
1	9/24/21	REV1 – Matrix/Ceiling Height

DRAWN BY: B. COWDEN
DATE: 8/25/2021
APPR. BY:
DATE:

PROJECT TITLE: FIRE ALARM SYSTEM TENANT FINISH FOR: ALLPRIA
BUILDING NAME & ADDRESS: 1400 SOUTH POTOMAC ST AURORA, CO 80012
PROJECT NUMBER: 2114205

FIRE ALARM & DETECTION SYSTEM
DRAWING TITLE: SUITE 150 FIRE ALARM PLAN
SCALE: AS SHOWN

PROJECT SHEET TITLE
FA–01

RSN: 1578633
Permit # 2021-2051722-LT
Sheet 3 of 13

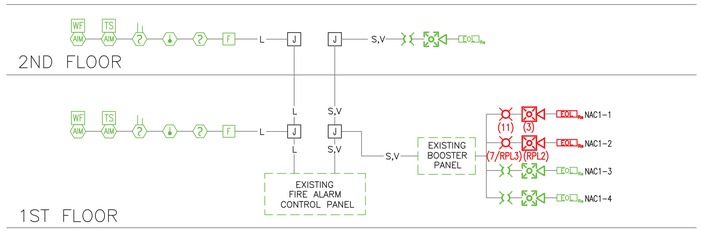

ONE-LINE RISER DIAGRAM

FIRE ALARM WIRE CODE CHART						
Code	Description	Wire Type	Wire Tag	Jacket Color	Color (+)	Color (−)
AC	120VAC Power Wiring	3#12 AWG Solid (w/ Green Ground)	–	–	Black (hot)	White (neu)
A	Annunciator Wiring	#18 AWG Twisted/Shielded Pair	–	–	Red	Black
D	Door Holder Wiring	2#14 AWG Solid	Door Holder	Red	Red	Black
L	SLC Wiring (Signaling Line Circuit)	2#18 AWG Solid Shielded Pair	SLC	Red	Red	Black
P	24VDC Power Wiring	2#16 AWG Solid	24 VDC	Red	Red	Black
R	Remote Light/Test Wiring	2#18 AWG Solid	R	Red	Red	Black
S	Notification Appliance (Horns) Wiring	2 or 4#14 AWG Solid	–	Yellow	Red	Black
SA	Notification Appliance (A Speaker) Wiring	2#16 AWG Twisted/Shielded Pair	–	Gray	Red	Black
SB	Notification Appliance (B Speaker) Wiring	2#16 AWG Twisted/Shielded Pair	–	Blue	Red	Black
T	Telephone Circuit Wiring	2#16 AWG Twisted/Shielded Pair	Circuit #	Red	Red	Black
V	Notification Appliance (Strobe) Wiring	2 or 4#14 AWG Solid	–	Yellow	Red	Black
Z	IDC Wiring (Initiating Device Circuit)	2#18 AWG Solid	Zone #	Red	Red	Black
Wire Type Class & Style		SLC – Class B		NAC – Class B		

INCREMENTAL VOLTAGE DROP CALCULATIONS FOR AUDIBLE/ VISUAL CIRCUITS
MINIMUM UL RATED VOLTAGE: 16 VOLTS
Current shown in calculations is RMS current at 16 volts.

Resistance: 12 Guage 2.01; 14 Guage 3.19; 16 Guage 5.08

Circut Number: NAC1-1
Location: Floor 1 Booster Panel
Input Voltage = 19.7

Notification Circuit	Current (in Amps)	Wire Distance (in Feet)	Total Distance (in feet)	Wire Size (AWG)	Resistance (Ohms)	Voltage Drop	From Baseline Voltage
CM Strobe 30CD	0.0350	90	90	14	0.5742	0.3078	19.3922
CM Horn Strobe 15CD	0.0500	21	111	14	0.1340	0.0671	19.3251
CM Strobe 15CD	0.0350	44	155	14	0.2807	0.1266	19.1985
CM Strobe 15CD	0.0350	24	179	14	0.1531	0.0637	19.1348
CM Strobe 15CD	0.0350	25	204	14	0.1595	0.0608	19.0740
CM Strobe 15CD	0.0350	25	229	14	0.1595	0.0552	19.0188
CM Horn Strobe 15CD	0.0500	25	254	14	0.1595	0.0496	18.9692
CM Strobe 15CD	0.0350	21	275	14	0.1340	0.0350	18.9343
CM Strobe 15CD	0.0350	19	294	14	0.1212	0.0274	18.9069
CM Strobe 15CD	0.0350	21	315	14	0.1340	0.0256	18.8813
CM Strobe 15CD	0.0350	20	335	14	0.1276	0.0199	18.8614
CM Strobe 15CD	0.0350	20	355	14	0.1276	0.0154	18.8459
CM Strobe 15CD	0.0350	21	376	14	0.1340	0.0115	18.8344
CM Horn Strobe 15CD	0.0500	23	399	14	0.1467	0.0075	18.8269
End of Line Resistor	0.0010	0	399	14	0.0000	0.0000	18.8269
Totals:	0.536	399			2.5456	0.8731	18.8269
Total Devices:	14						

INCREMENTAL VOLTAGE DROP CALCULATIONS FOR AUDIBLE/ VISUAL CIRCUITS
MINIMUM UL RATED VOLTAGE: 16 VOLTS
Current shown in calculations is RMS current at 16 volts.

Resistance: 12 Guage 2.01; 14 Guage 3.19; 16 Guage 5.08

Circut Number: NAC1-2
Location: Floor 1 Booster Panel
Input Voltage = 19.7

Notification Circuit	Current (in Amps)	Wire Distance (in Feet)	Total Distance (in feet)	Wire Size (AWG)	Resistance (Ohms)	Voltage Drop	From Baseline Voltage
Horn Strobe 75CD	0.0400	60	60	14	0.3828	0.1569	19.5431
Strobe 15CD	0.0280	47	107	14	0.2999	0.1109	19.4321
CM Strobe 15CD	0.0350	25	132	14	0.1595	0.0545	19.3776
CM Strobe 15CD	0.0350	23	155	14	0.1467	0.0450	19.3325
CM Strobe 15CD	0.0350	22	177	14	0.1404	0.0382	19.2943
Strobe 15CD	0.0280	21	198	14	0.1340	0.0318	19.2626
Horn Strobe 30CD	0.0400	25	223	14	0.1595	0.0333	19.2292
CM Strobe 15CD	0.0350	30	253	14	0.1914	0.0323	19.1969
CM Strobe 15CD	0.0350	22	275	14	0.1404	0.0188	19.1781
Strobe 15CD	0.0280	17	292	14	0.1085	0.0107	19.1673
CM Strobe 30CD	0.0350	32	324	14	0.2042	0.0145	19.1529
CM Strobe 15CD	0.0350	24	348	14	0.1531	0.0055	19.1473
End of Line Resistor	0.0010	0	348	14	0.0000	0.0000	19.1473
Totals:	0.410	348			2.2202	0.5527	19.1473
Total Devices:	12						

BOOSTER CALCULATIONS

FOR: 1400 S. POTOMAC STREET
AURORA, CO 80012

HOURS OF SUPERVISION: 24 HOURS
MINUTES OF ALARM: 5 MINUTES

PANEL: EST BPS-6A

ITEM	QTY	PART NUMBER	DESCRIPTION	Device Supervisory Current	Device Alarm Current	Total Supervisory Current	Total Alarm Current
1	1	EXISTING	Notification Booster Panel	0.070000	0.190000	0.070000	0.190000
			TOTAL:			0.070000	0.190000

PERIPHERAL:

ITEM	QTY	PART NUMBER	DESCRIPTION	Device Supervisory Current	Device Alarm Current	Total Supervisory Current	Total Alarm Current
1	18	EXISTING	15cd Strobe	0.000000	0.103000	0.000000	1.854000
2	2	EXISTING	30cd Strobe	0.000000	0.141000	0.000000	0.282000
3	9	EXISTING	15cd Horn/Strobe	0.000000	0.129000	0.000000	1.161000
4	4	EXISTING	30cd Horn/Strobe	0.000000	0.167000	0.000000	0.668000
5	2	EXISTING	75cd Horn/Strobe	0.000000	0.281000	0.000000	0.562000
6	3	EXISTING	110cd Horn/Strobe	0.000000	0.337000	0.000000	1.011000
7	1	EXISTING	15cd Ceiling Mt. Strobe	0.000000	0.109000	0.000000	0.109000
8	1	EXISTING	75cd Ceiling Mt. Strobe	0.000000	0.281000	0.000000	0.281000
9	3	G4VRF	15cd Strobe	0.000000	0.028000	0.000000	0.084000
10	1	G4AVRF	30cd Horn/Strobe	0.000000	0.040000	0.000000	0.040000
11	1	G4AVRF	75cd Horn/Strobe	0.000000	0.040000	0.000000	0.040000
12	16	GCVRF	15cd Ceiling Mt. Strobe	0.000000	0.035000	0.000000	0.560000
13	2	GCVRF	30cd Ceiling Mt. Strobe	0.000000	0.035000	0.000000	0.070000
14	3	GCAVRF	15cd Ceiling Mt. Horn/Strobe	0.000000	0.050000	0.000000	0.150000
			TOTAL:			0.000000	6.872000

SUPERVISORY:
PANEL: 0.070000 AMPS
PERIPHERAL 0.000000 AMPS
SUB-TOTAL: 0.070000 AMPS
X HOURS OF SUPERVISORY: 24.0000 HOURS
SUB-TOTAL: 1.680000 AMP HOURS

ALARM:
PANEL: 0.190000 AMPS
PERIPHERAL: 6.872000 AMPS
SUB-TOTAL: 7.062000 AMPS
X MINUTES OF ALARM: 0.08333 HOURS
SUB-TOTAL: 0.588500 AMP HOURS

TOTALS:
TOTAL SUPERVISORY: 1.680000 AMP HOURS
TOTAL ALARM: 0.588500 AMP HOURS
TOTAL: 2.268500 AMP HOURS
TOTAL PLUS SAFETY FACTOR(20%) 2.72220 AMP HOURS
Batteries Supplied - 1 Set of: 7.00000 AMP HOURS

1400 S. POTOMAC BUILDING SEQUENCE OF OPERATIONS

1

SYSTEM OUTPUTS

	FACP Annunciation								Notification				Fire Safety Ctrl.						Monitoring				
SYSTEM INPUTS	Actuate Common Alarm Signal Indicator	Actuate Audible Alarm Signal	Actuate Common Supervisory Signal Indicator	Actuate Audible Supervisory Signal	Actuate Common Trouble Signal Indicator	Actuate Audible Common Trouble Signal	Display Change of Status		Actuate 1st Floor Evacuation Signals (Horn/Strobes)	Actuate 2nd Floor Evacuation Signals (Horn/Strobes)	Actuate Exterior Horn/Strobe	Silence Audible Signal (Horns)	Release Magnetically Held Smoke Doors	Recall Elevator(s) to 1st Floor - Primary Recall	Recall Elevator(s) to 2nd Floor - Alternate Recall	Shut Down Air Handling Units	Activate Hat Light	Activate Shunt-Trip	Transmit Fire Alarm Signal to Supervising Station	Transmit Trouble Signal to Supervising Station	Transmit Supervisory Signal to Supervising Station	Transmit Waterflow Signal to Supervising Station	
	A	B	C	D	E	F	G		H	I	J	K	L	M	N	O	P	Q	R	S	T	U	
1	X	X					X		X	X	X		X						X				1
2	X	X					X		X	X	X		X						X				2
3	X	X					X		X	X	X		X		X				X				3
4	X	X					X		X	X	X		X	X					X				4
5	X	X					X		X	X	X		X	X			X		X				5
6	X	X					X		X	X	X		X	X			X		X				6
7	X	X					X		X	X	X		X						X				7
8	X	X					X		X	X	X		X						X				8
9	X	X					X		X	X	X		X					X	X				9
10	X	X					X		X	X	X		X						X				10
11			X	X			X									X				X			11
12	X	X					X		X	X	X		X						X			X	12
13	X	X					X		X	X	X		X						X			X	13
14			X	X			X													X			14
15					X	X	X						X							X			15
16					X	X	X													X			16
17					X	X	X													X			17
18					X	X	X													X			18
19					X	X	X													X			19
20	Alarm Signal Silence											X											20
	A	B	C	D	E	F	G		H	I	J	K	L	M	N	O	P	Q	R	S	T	U	

FIRE ALARM SERVICES, INC.
4800 W. 60TH AVENUE
ARVADA, CO 80003
phone: 303-466-8800
fax: 303-466-8820
www.fasonline.cc email: contactus@fasonline.cc

REVISIONS: REV1 – Matrix/Ceiling Height
NO. 1 DATE 9/24/21
DRAWN BY: B. COWDEN
DATE: 8/25/2021
APPR. BY:
DATE:

PROJECT TITLE: FIRE ALARM SYSTEM TENANT FINISH FOR: ALLPRIA
BUILDING NAME & ADDRESS: 1400 SOUTH POTOMAC ST AURORA, CO 80012
PROJECT NUMBER: 2114205

FIRE ALARM & DETECTION SYSTEM
DRAWING TITLE: SUITE 150 CALCULATIONS
SCALE: N/A

City of Aurora Building Division
Reviewed for Code Compliance
Approved as Noted: *M. Apodaca*
Date: *Oct 05, 2021*
2015 INTERNATIONAL CODES & 2020 NEC

Raymond P. Breeland
Certification Expires 04/01/22
Fire Alarm Systems Level III
NICET Certification #111006
Date: 9/24/2021

PROJECT SHEET TITLE
FA-02

Fire Alarm Services, Inc.
4800 West 60th Avenue
Arvada, CO 80003

Phone (303) 466-8800
Fax (303) 466-8820
contactus@fasonline.cc

Fire Alarm System Addition at:

Allpria
1400 S Potomac Street, suite 150
Aurora, CO 80012

Scope of Work:

Provide the following fire alarm system modification to accommodate the proposed construction for the Allpria project in suite 150 located at 1400 South Potomac Street:

1. PROVIDE AND INSTALL THREE (3) NEW HORN/STROBES
2. REPLACE TWO (2) EXISTING HORN/STROBES WITH NEW HORN/STROBES
3. PROVIDE AND INSTALL EIGHTEEN (18) NEW STROBES
4. REPLACE THREE (3) EXISTING STROBES WITH NEW STROBES

Raymond P. Breeland
Certification Expires 04/01/22
Fire Alarm Systems Level III
NICET Certification #111006

Date 8/25/2021



RSN: 1578633
Permit # 2021-2051722-LT
Sheet 5 of 13

Genesis G4 Series Signaling Appliance Installation Sheet

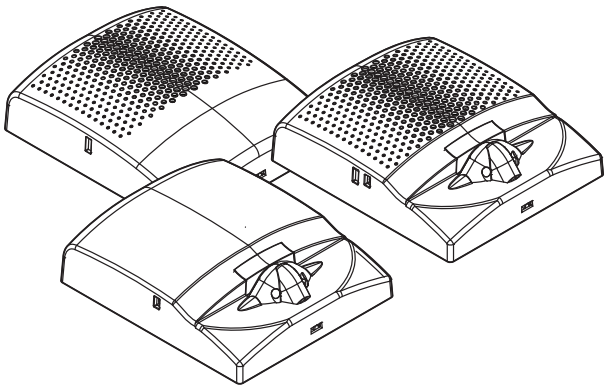

Description

Genesis G4 Series horns, strobes, and horn-strobes are wall-mounted plug-in fire alarm signaling appliances designed for indoor dry applications. See Table 1 to Table 3 for a list of models.

Table 1: Horn models

Number	Description
G4ARF	Wall horn, red, FIRE
G4ARF-FR	Wall horn, red, FEU
G4ARF-SP	Wall horn, red, FUEGO
G4ARN	Wall horn, red, no marking
G4AWF	Wall horn, white, FIRE
G4AWF-FR	Wall horn, white, FEU
G4AWF-SP	Wall horn, white, FUEGO
G4AWN	Wall horn, white, no marking

Table 2: Strobe models

Number	Description
G4VRF	Wall strobe, red, FIRE
G4VRF-FR	Wall strobe, red, FEU
G4VRF-SP	Wall strobe, red, FUEGO
G4VRN	Wall strobe, red, no marking
G4VWF	Wall strobe, white, FIRE
G4VWF-FR	Wall strobe, white, FEU
G4VWF-SP	Wall strobe, white, FUEGO
G4VWN	Wall strobe, white, no marking

Table 3: Horn-strobe models

Number	Description
G4AVRF	Wall horn-strobe, red, FIRE
G4AVRF-FR	Wall horn-strobe, red, FEU
G4AVRF-SP	Wall horn-strobe, red, FUEGO
G4AVRN	Wall horn-strobe, red, no marking
G4AVWF	Wall horn-strobe, white, FIRE
G4AVWF-FR	Wall horn-strobe, white, FEU
G4AVWF-SP	Wall horn-strobe, white, FUEGO
G4AVWN	Wall horn-strobe, white, no marking

Genesis G4 Series signaling appliances feature:

- Field-configurable horn and strobe outputs. See Figure 2.
- Enhanced synchronization circuitry to comply with the latest requirements of UL 1638 and CAN/ULC-S526.
- Input wiring test points on the front of the appliance when the cover is removed.

Note: Synchronized operation requires a separately installed synchronization device. See the control unit or power supply compatibility list for compatible synchronization devices.

Configuration

Caution: Equipment damage hazard. Using excessive force when removing the appliance cover may damage the cover and prevent it from latching in place.

To configure the signaling appliance:

1. Remove the appliance cover. See Figure 1.

   Insert a small, flat-bladed screwdriver into the slot at the bottom of the appliance.

   Gently pull up on the screwdriver to pry the bottom of the appliance cover down and away from the appliance.

   Lift the bottom of the cover out and over the top of the appliance.
2. Set the light and sound output switches. See Figure 2.
3. Replace the appliance cover.

Figure 1: Removing and replacing the cover

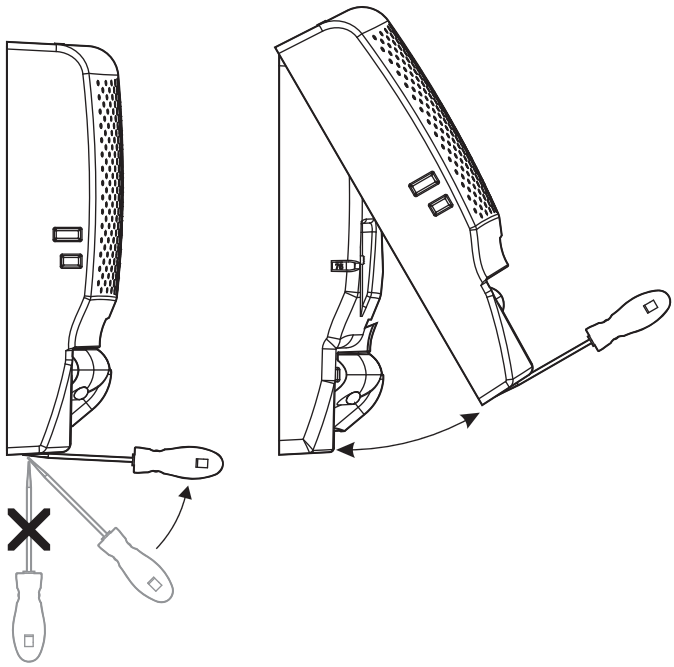

© 2019 United Technologies Corporation

P/N 3102544-EN • REV 002 • ISS 04JAN19

RSN: 1578633
Permit # 2021-2051722-LT
Sheet 6 of 13

Figure 2: Light and sound output settings

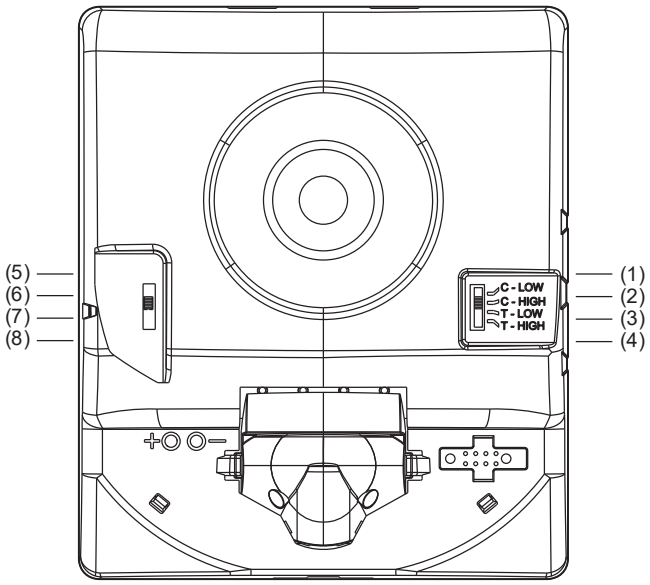

(1) Constant, low dB
(2) Constant, high dB
(3) T3 temporal, low dB
(4) T3 temporal, high dB
(5) 110 candela
(6) 75 candela
(7) 30 candela
(8) 15 candela

Figure 3: Mounting on a 4-in. square electrical box

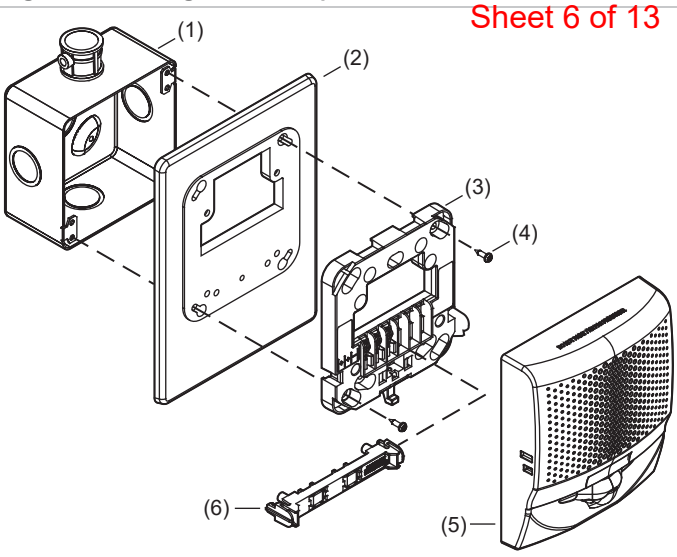

(1) Electrical box
(2) Trim plate (optional)
(3) Mounting plate
(4) Machine screw (2X, supplied with mounting plate)
(5) G4 Series signaling appliance
(6) Shorting clip

Installation

Install and wire this device in accordance with applicable national and local codes, ordinances, and regulations.

Caution: Electrical supervision requires that you break the wire run at each terminal. Do not loop the signaling circuit field wires around the terminals.

Note: Do not use Genesis G4 Series strobe and horn-strobe signaling appliances in applications where signal power is cycled on and off, such as in coded or private mode signaling systems.

To install the appliance:

1. Using the screws supplied with the mounting plate, attach the mounting plate and, if used, the trim plate to the electrical box. See Figure 3. The mounting plate is ordered separately.
2. Connect the field wiring. Observe signal polarity for the appliance to operate properly. See Figure 4.
3. Remove the shorting clip (Figure 3, item 6). Retain for future use.
4. Plug the appliance into the mounting plate by setting the appliance on the top of the mounting plate, and then snapping the bottom into place. See Figure 5.

   To unplug the appliance, press the spring clip on the bottom, and then lift the appliance away from the mounting plate.
5. Test the unit for proper operation.

Figure 4: Wiring

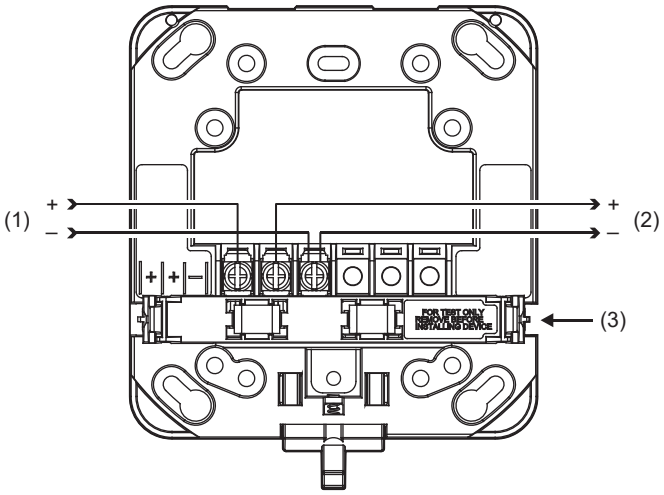

(1) Horn/strobe circuit in (signal polarity shown in the active condition)
(2) Horn/strobe circuit out
(3) Shorting clip

RSN: 1578633
Permit # 2021-2051722-LT
Sheet 7 of 13

Figure 5: Removing and replacing the appliance

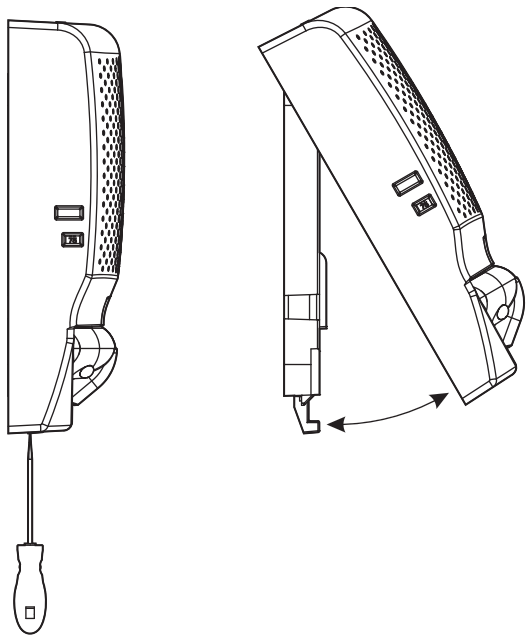

Maintenance and testing

Caution: Equipment damage hazard. To maintain the required agency listings, do not change factory-applied finishes.

This unit is not serviceable or repairable. If the unit fails to operate, contact the supplier for a replacement.

Perform a visual and operational inspection in accordance with applicable codes and standards or as directed by the local authority having jurisdiction.

Input wiring test points are available on the front of the appliance when the cover is removed. The test points let you easily spot check the field circuit wiring without the need to remove the appliance from the wall. See Figure 6.

Figure 6: Test points

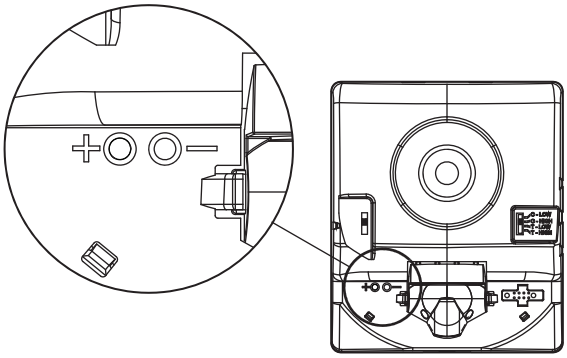

Note: Marking indicates signal polarity when the circuit is active.

Specifications

Operating voltage	16 to 33 VDC, 16 to 33 VFWR
Operating current	See Table 4 to Table 6
Horn signal type	Constant or temporal (TC3)
Sound output	See Table 7
Sound pattern	See Table 8
Light output	15, 30, 75, or 110 candela
Strobe flash rate	1 fps (flash per second) approx.
Light distribution	See Figure 7
Synchronization	20 Ω max. between any two devices. To determine allowed wire resistance, refer to these specifications, and the specifications for the synchronized signal source.
Dimensions (W×H×D)	4.95 × 5.78 × 1.62 in. (12.57 × 14.68 × 4.11 cm) See Figure 8
Strobe-to-box center offset	−1.70 in (−4.32 cm)
Compatible electrical boxes	1-gang, 2-gang, 4-inch octagon 4-inch square
Trim plates	G4TR, G4TW
Replacement covers	See Table 9 to Table 11
Operating environment Temperature Relative humidity	 32 to 122°F (0 to 50°C) 0 to 93% noncondensing
Storage temperature	-40 to 158°F (-40 to 70°C)

Table 4: Operating current (horn models)

Sound setting	16 to 33 VDC	16 to 33 VFWR
C-LOW, T-LOW	18 mA	22 mA
C-HIGH, T-HIGH	28 mA	38 mA

Table 5: Operating current (strobe models)

Strobe setting	16 to 33 VDC	16 to 33 VFWR
15, 30, 75, 110	28 mA	36 mA

Table 6: Operating current (horn-strobe models)

Strobe setting	Sound setting	16 to 33 VDC	16 to 33 VFWR
15, 30, 75, 110	C-LOW, T-LOW	40 mA	48 mA
	C-HIGH, T-HIGH	50 mA	60 mA

Table 7: Sound output (horn and horn-strobe models)

Sound setting	Reverberant (UL 464)	Anechoic (CAN/ULC-S525)
C-LOW, T-LOW	80 dBA	86 dBA
C-HIGH, T-HIGH	86 dBA	92 dBA

Table 8: Sound pattern (ULC)

Axis	Angle	Change in output
Horizontal	135° and 45°	–3 dBA
	150° and 30°	–6 dBA
Vertical	135° and 40°	–3 dBA
	150° and 30°	–6 dBA

RSN: 1578633
Permit # 2021-2051722-LT
Sheet 8 of 13

Table 9: Horn replacement covers

Number	Description
G4ARA-CVR	Cover, wall horn, red, ALERT
G4ARF-CVR	Cover, wall horn, red, FIRE
G4ARF-FR-CVR	Cover, wall horn, red, FEU
G4ARF-SP-CVR	Cover, wall horn, red, FUEGO
G4ARN-CVR	Cover, wall horn, red, no marking
G4AWA-CVR	Cover, wall horn, white, ALERT
G4AWF-CVR	Cover, wall horn, white, FIRE
G4AWF-FR-CVR	Cover, wall horn, white, FEU
G4AWF-SP-CVR	Cover, wall horn, white, FUEGO
G4AWN-CVR	Cover, wall horn, white, no marking

Table 10: Strobe replacement covers

Model	Description
G4VRA-CVR	Cover, wall strobe, red, ALERT
G4VRF-CVR	Cover, wall strobe, red, FIRE
G4VRF-FR-CVR	Cover, wall strobe, red, FEU
G4VRF-SP-CVR	Cover, wall strobe, red, FUEGO
G4VRN-CVR	Cover, wall strobe, red, no marking
G4VWA-CVR	Cover, wall strobe, white, ALERT
G4VWF-CVR	Cover, wall strobe, white, FIRE
G4VWF-FR-CVR	Cover, wall strobe, white, FEU
G4VWF-SP-CVR	Cover, wall strobe, white, FUEGO
G4VWN-CVR	Cover, wall strobe, white, no marking

Table 11: Horn-strobe replacement covers

Model	Description
G4AVRA-CVR	Cover, wall horn-strobe, red, ALERT
G4AVRF-CVR	Cover, wall horn-strobe, red, FIRE
G4AVRF-FR-CVR	Cover, wall horn-strobe, red, FEU
G4AVRF-SP-CVR	Cover, wall horn-strobe, red, FUEGO
G4AVRN-CVR	Cover, wall horn-strobe, red, no marking
G4AVWA-CVR	Cover, wall horn-strobe, white, ALERT
G4AVWF-CVR	Cover, wall horn-strobe, white, FIRE
G4AVWF-FR-CVR	Cover, wall horn-strobe, white, FEU
G4AVWF-SP-CVR	Cover, wall horn-strobe, white, FUEGO
G4AVWN-CVR	Cover, wall horn-strobe, white, no marking

Figure 7: Light distribution

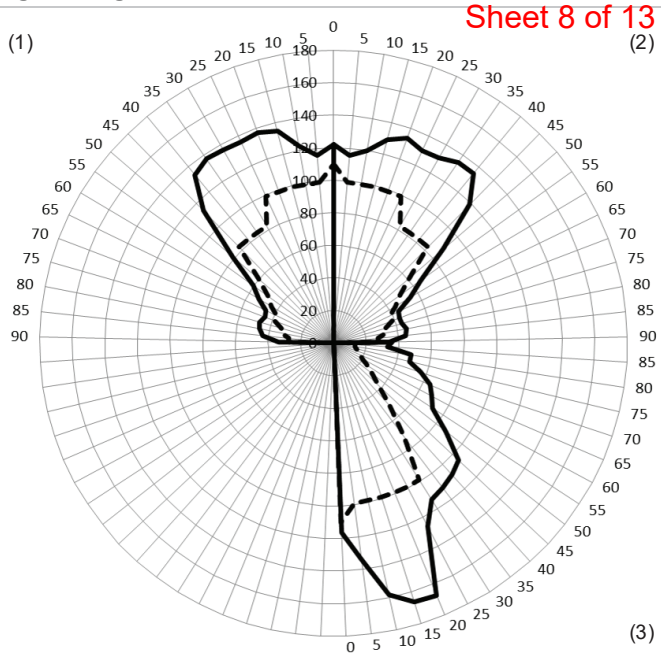

(1) Horizontal left
(2) Horizontal right
(3) Vertical bottom

Measured
UL minimum

Figure 8: Dimensions

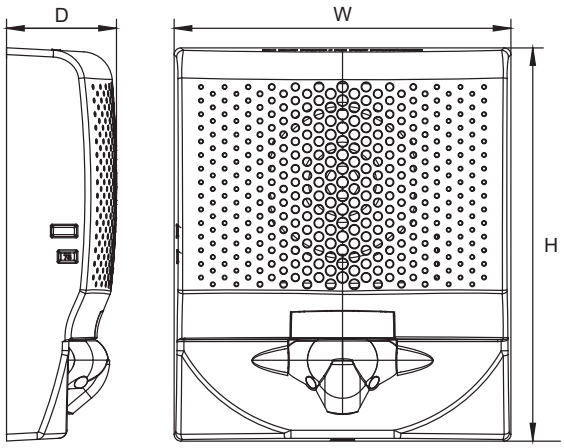

Regulatory information

UL rating	Regulated 24 DC and 24 FWR
FCC compliance	This device complies with part 15 of the FCC Rules. Operation is subject to the following two conditions: (1) This device may not cause harmful interference, and (2) this device must accept any interference received, including interference that may cause undesired operation.
Industry Canada compliance	This Class A digital apparatus complies with Canadian ICES-003.
Environmental class	Indoor, dry

Contact information

For contact information, see www.edwardsfiresafety.com.

P/N 3102544-EN • REV 002 • ISS 04JAN19

RSN: 1578633
Permit # 2021-2051722-LT
Sheet 9 of 13

Genesis GC Series Signaling Appliance Installation Sheet

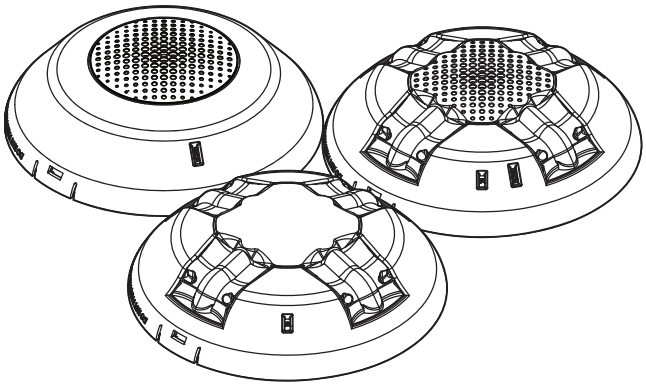

Description

Genesis GC Series horns, strobes, and horn-strobes are ceiling- or wall-mounted plug-in fire alarm signaling appliances designed for indoor dry applications. See Table 1 through Table 3 for a list of models.

Table 1: Horn models

Number	Description
GCARF	Ceiling horn, red, FIRE
GCARF-FR	Ceiling horn, red, FEU
GCARF-SP	Ceiling horn, red, FUEGO
GCARN	Ceiling horn, red, no marking
GCAWF	Ceiling horn, white, FIRE
GCAWF-FR	Ceiling horn, white, FEU
GCAWF-SP	Ceiling horn, white, FUEGO
GCAWN	Ceiling horn, white, no marking

Table 2: Strobe models

Number	Description
GCVRF	Ceiling strobe, red, FIRE
GCVRF-FR	Ceiling strobe, red, FEU
GCVRF-SP	Ceiling strobe, red, FUEGO
GCVRN	Ceiling strobe, red, no marking
GCVWF	Ceiling strobe, white, FIRE
GCVWF-FR	Ceiling strobe, white, FEU
GCVWF-SP	Ceiling strobe, white, FUEGO
GCVWN	Ceiling strobe, white, no marking

Table 3: Horn-strobe models

Number	Description
GCAVRF	Ceiling horn-strobe, red, FIRE
GCAVRF-FR	Ceiling horn-strobe, red, FEU
GCAVRF-SP	Ceiling horn-strobe, red, FUEGO
GCAVRN	Ceiling horn-strobe, red, no marking
GCAVWF	Ceiling horn-strobe, white, FIRE
GCAVWF-FR	Ceiling horn-strobe, white, FEU
GCAVWF-SP	Ceiling horn-strobe, white, FUEGO
GCAVWN	Ceiling horn-strobe, white, no marking

Genesis GC Series signaling appliances feature:

- Field-configurable horn and strobe outputs. See Figure 2.
- Enhanced synchronization circuitry to comply with the latest requirements of UL 1638 and CAN/ULC-S526.
- Input wiring test points on the front of the appliance when the cover is removed.

Note: Synchronized operation requires a separately installed synchronization device. See the control unit or remote booster/auxiliary power supply compatibility list for compatible synchronization devices.

Configuration

Caution: Equipment damage hazard. Using excessive force when removing the appliance cover may damage the cover and prevent it from latching in place.

To configure the signaling appliance:

1. Remove the appliance cover. See Figure 1.

   Insert a small, flat-bladed screwdriver into the slot at the bottom of the appliance.

   Gently pull up on the screwdriver to pry the bottom of the appliance cover down and away from the appliance.

   Lift the bottom of the cover out and over the top of the appliance.
2. Set the light and sound output switches. See Figure 2.
3. Replace the appliance cover.

© 2019 United Technologies Corporation

P/N 3102545-EN • REV 002 • ISS 24JUN19

Figure 1: Removing and replacing the cover

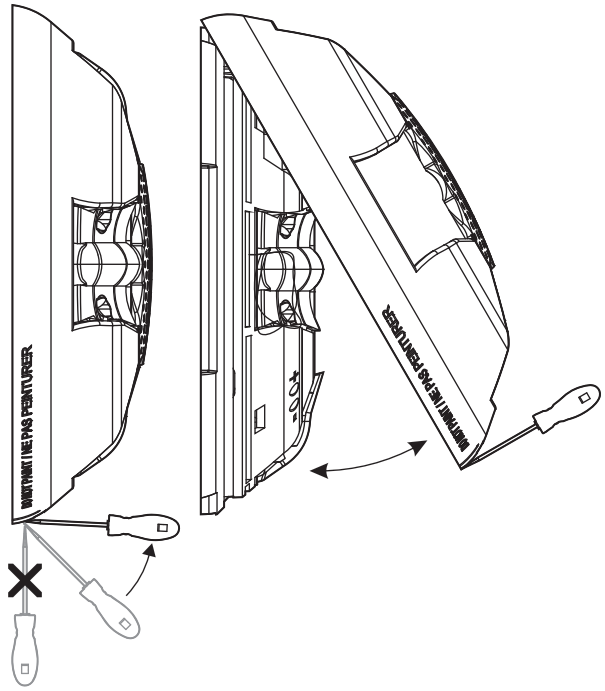

Figure 2: Light and sound output settings

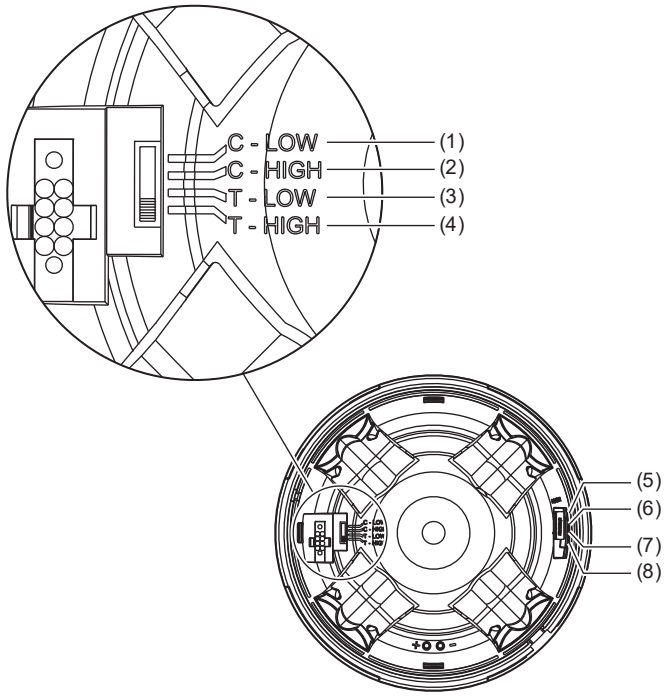

(1) Constant, low dB
(2) Constant, high dB
(3) T3 temporal, low dB
(4) T3 temporal, high dB
(5) 115 candela
(6) 75 candela
(7) 30 candela
(8) 15 candela

Note: Temporal 3 coding is the required output for fire notification devices per NFPA 72. Any device coding other than Temporal 3 is at the discretion and approval of the local authority having jurisdiction (AHJ).

Installation

Install and wire this device in accordance with applicable national and local codes, ordinances, and regulations.

Caution: Electrical supervision requires that you break the wire run at each terminal. Do not loop the signaling circuit field wires around the terminals.

To install the appliance:

1. Attach the wiring plate and, if used, the trim plate to the electrical box. See Figure 3. The wiring plate and the trim plate are both ordered separately.
2. Connect the field wiring. Observe signal polarity for the appliance to operate properly. See Figure 4.
3. Remove the shorting clip (Figure 4, item 3). Retain for future use.
4. Plug the appliance into the wiring plate by setting the appliance on the top of the wiring plate, and then snapping the bottom into place. See Figure 5.

   To unplug the appliance, press the spring clip on the bottom, and then lift the appliance away from the wiring plate.
5. Test the unit for proper operation.

Figure 3: Mounting diagram

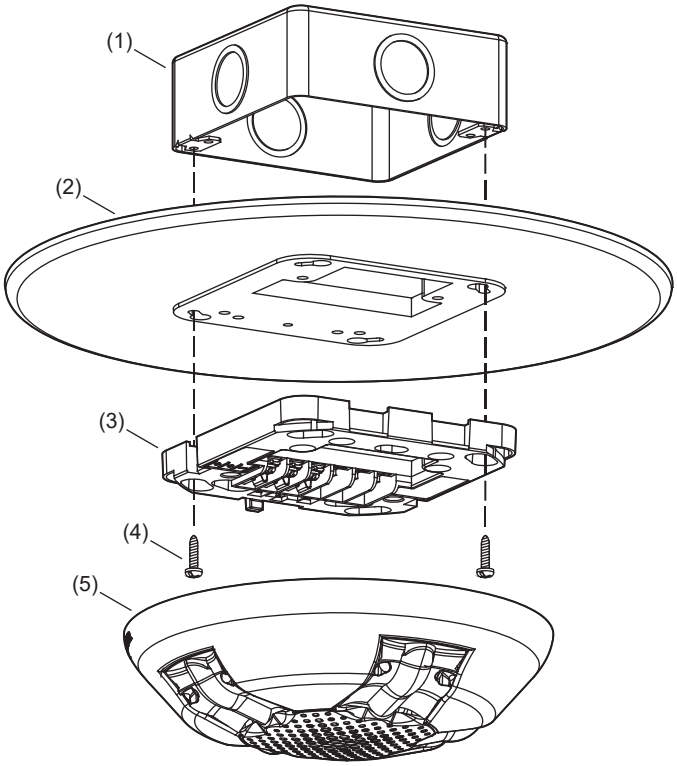

(1) Electrical box
(2) Trim plate (optional)
(3) Wiring plate (required, ordered separately)
(4) Machine screw (2X, supplied with wiring plate)
(5) GC Series signaling appliance

Figure 4: Wiring

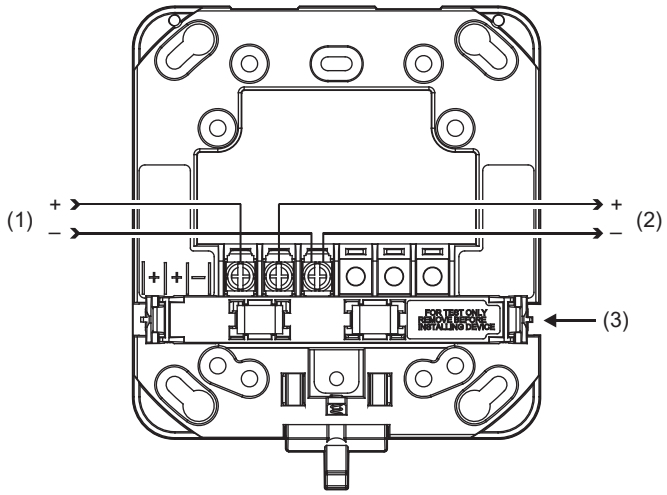

(1) Horn/strobe circuit in (signal polarity shown in the active condition)
(2) Horn/strobe circuit out
(3) Shorting clip

Figure 5: Removing and replacing the appliance

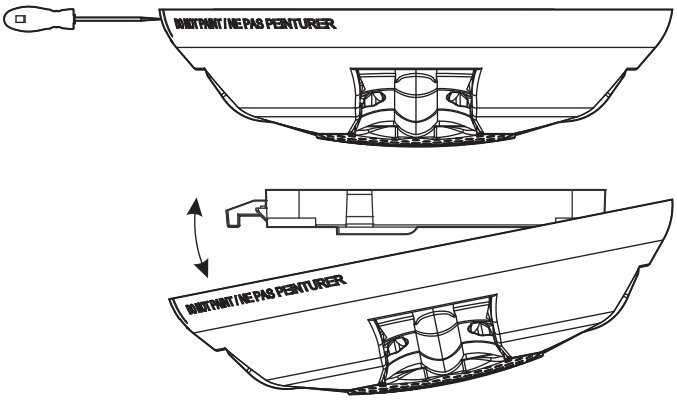

Maintenance and testing

Caution: Equipment damage hazard. To maintain the required agency listings, do not change factory-applied finishes.

This unit is not serviceable or repairable. If the unit fails to operate, contact the supplier for a replacement.

Perform a visual and operational inspection in accordance with applicable codes and standards or as directed by the local authority having jurisdiction.

Input wiring test points are available on the front of the appliance when the cover is removed. The test points let you easily spot check the field circuit wiring without the need to remove the appliance from the wall. See Figure 6.

Figure 6: Test points

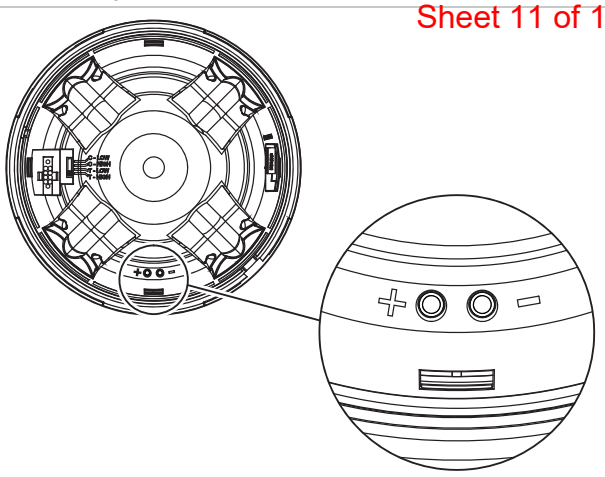

Note: Marking indicates signal polarity when the circuit is active.

Specifications

Operating voltage	16 to 33 VDC, 16 to 33 VFWR
Operating current	See Table 4 to Table 6
Horn signal type	Constant or T3 temporal
Sound output	See Table 7 and Table 8
Sound pattern	See Table 9 and Table 10
Light output	15, 30, 75,or 115 cd
Strobe flash rate	1 fps (flash per second) approx.
Light distribution	See Figure 7
Synchronization	20 Ω max. between any two devices. To determine allowed wire resistance, refer to these specifications, and the specifications for thesynchronized signal source.
Dimensions (Ø × D)	6.8 × 1.82 in. (17.27 × 4.62 cm) See Figure 8
Strobe-to-box center offset	0 in (0 cm)
Compatible electrical boxes	1-gang, 2-gang, 4-inch octagon, 4-inch square
Wiring plate	GP10 (pack of ten)
Trim rings	GCTR, GCTW
Replacement covers	See Table 11 to Table 13
Operating environment Temperature Relative humidity	 32 to 122°F (0 to 50°C) 0 to 93% noncondensing
Storage temperature	-40 to 158°F (-40 to 70°C)

Table 4: Operating current (horn models)

Sound setting	16 to 33 VDC	16 to 33 VFWR
C-LOW, T-LOW	20 mA	25 mA
C-HIGH, T-HIGH	30 mA	40 mA

RSN: 1578633
Permit # 2021-2051722-LT
Sheet 12 of 13

Table 5: Operating current (strobe models)

Strobe setting	16 to 33 VDC	16 to 33 VFWR
15, 30, 75, 115	35 mA	45 mA

Table 6: Operating current (horn-strobe models)

Strobe setting	Sound setting	16 to 33 VDC	16 to 33 VFWR
15, 30, 75, 115	C-LOW, T-LOW	50 mA	60 mA
	C-HIGH, T-HIGH	60 mA	75 mA

Table 7: Sound output (horn models)

Sound setting	Reverberant (UL 464)	Anechoic (CAN/ULC-S525)
C-LOW, T-LOW	80 dBA	86 dBA
C-HIGH, T-HIGH	86 dBA	92 dBA

Table 8: Sound output (horn-strobe models)

Sound setting	Reverberant (UL 464)	Anechoic (CAN/ULC-S525)
C-LOW, T-LOW	80 dBA	86 dBA
C-HIGH, T-HIGH	86 dBA	92 dBA

Table 9: Sound pattern – horn models (ULC)

Axis	Angle (°)	Output (dBA)
Horizontal	115 and 55	93.3
Vertical	125 and 50	91.7

Table 10: Sound pattern – horn-strobe models (ULC)

Axis	Angle (°)	Output (dBA)
Horizontal	145 and 35	93.0
	155 and 25	90.8
Vertical	135 and 35	92.0
	155 and 25	85.4

Table 11: Horn replacement covers

Model	Description
GCARA-CVR	Cover, ceiling horn, red, ALERT
GCARF-CVR	Cover, ceiling horn, red, FIRE
GCARF-FR-CVR	Cover, ceiling horn, red, FEU
GCARF-SP-CVR	Cover, ceiling horn, red, FUEGO
GCARN-CVR	Cover, ceiling horn, red, no marking
GCAWA-CVR	Cover, ceiling horn, white, ALERT
GCAWF-CVR	Cover, ceiling horn, white, FIRE
GCAWF-FR-CVR	Cover, ceiling horn, white, FEU
GCAWF-SP-CVR	Cover, ceiling horn, white, FUEGO
GCAWN-CVR	Cover, ceiling horn, white, no marking

Table 12: Strobe replacement covers

Model	Description
GCVRA-CVR	Cover, ceiling strobe, red, ALERT
GCVRF-CVR	Cover, ceiling strobe, red, FIRE
GCVRF-FR-CVR	Cover, ceiling strobe, red, FEU
GCVRF-SP-CVR	Cover, ceiling strobe, red, FUEGO
GCVRN-CVR	Cover, ceiling strobe, red, no marking
GCVWA-CVR	Cover, ceiling strobe, white, ALERT
GCVWF-CVR	Cover, ceiling strobe, white, FIRE
GCVWF-FR-CVR	Cover, ceiling strobe, white, FEU
GCVWF-SP-CVR	Cover, ceiling strobe, white, FUEGO
GCVWN-CVR	Cover, ceiling strobe, white, no marking

Table 13: Horn-strobe replacement covers

Model	Description
GCAVRA-CVR	Cover, ceiling horn-strobe, red, ALERT
GCAVRF-CVR	Cover, ceiling horn-strobe, red, FIRE
GCAVRF-FR-CVR	Cover, ceiling horn-strobe, red, FEU
GCAVRF-SP-CVR	Cover, ceiling horn-strobe, red, FUEGO
GCAVRN-CVR	Cover, ceiling horn-strobe, red, no marking
GCAVWA-CVR	Cover, ceiling horn-strobe, white, ALERT
GCAVWF-CVR	Cover, ceiling horn-strobe, white, FIRE
GCAVWF-FR-CVR	Cover, ceiling horn-strobe, white, FEU
GCAVWF-SP-CVR	Cover, ceiling horn-strobe, white, FUEGO
GCAVWN-CVR	Cover, ceiling horn-strobe, white, no marking

Figure 7: Light distribution

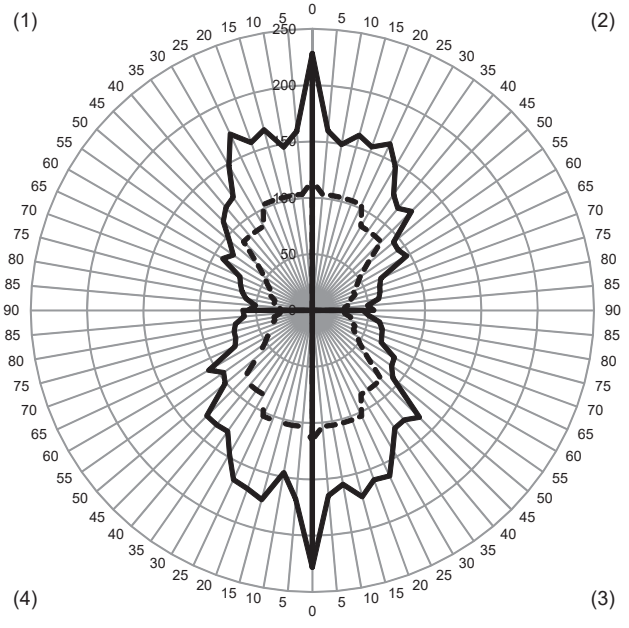

(1) Horizontal left
(2) Horizontal right
(3) Vertical below
(4) Vertical above

———— Measured
– – – – – UL minimum for 115 cd appliance

Figure 8: Dimensions

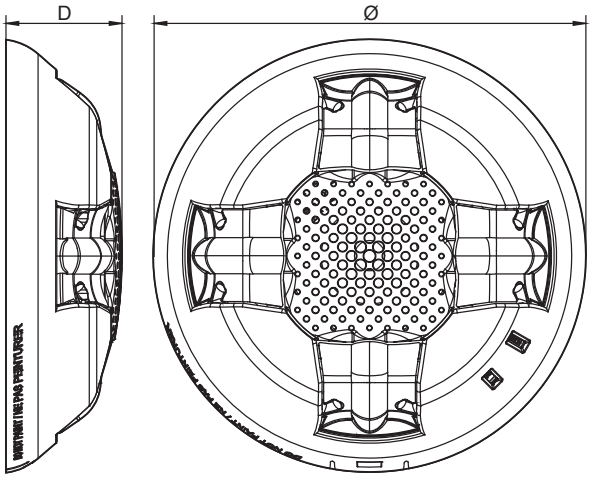

Regulatory information

UL rating	Regulated 24 DC and 24 FWR
FCC compliance	This device complies with part 15 of the FCC Rules. Operation is subject to the following two conditions: (1) This device may not cause harmful interference, and (2) this device must accept any interference received, including interference that may cause undesired operation.
Industry Canada compliance	This Class A digital apparatus complies with Canadian ICES-003.
Environmental class	Indoor, dry

Contact information

For contact information, see www.edwardsfiresafety.com.