Aurora All-America City 2008

City of Aurora Public Works Department

BUILDING PERMIT APPLICATION

Building Division • 15151 E. Alameda Parkway, Ste 2400 • Aurora, CO 80012 • 303-739-7420 • Fax: 303-739-7412
Email: permitcounter@auroragov.org

Project Address: 1400 S Potomac St.			Unit #: Building
Project Name: Fire Alarm Panel Replacement			
Contractor Company Name: Fire Alarm Services	Phone: 3-4660-8800	Fax: 3-4660-8800	
Contact Person: Jeremy Biebel	Phone		
Email: Jbiebel@FASonline.cc		Fax	
Architect and/or Engineer Contact information for correction items			
Architect or Engineer name		Email	
Phone		Fax	
Owner (Required for Certificate of Occupancy) only			
Owner address			
Email			
Valuation / FDA: $ $22,250		Materials Cost: $ 11,125	

FDA = Fee Determination Assessment. (Also known as the value of project) has no relationship to the construction costs for the building which can vary greatly. Rather, The assessment is used only to determine the appropriate level of fees to fund our code compliance activities.

Describe The Work You Will Be Doing: Scope of work is on Cut-sheets

I declare under penalty that this application has been examined by me and that the statements made herein are made in good faith pursuant to City of Aurora tax and licensing regulations; and to the best of my knowledge and belief are true, correct and complete.

Print Name Adrian Fontes **Signature** [signature] **Date** 11/24/14

BOARD OF APPEALS: Contractor's Appeals and Standards Board. Applicants have the right to have the board hear appeals of orders, decisions or determinations made by the building official relative to the application and interpretation of the building code. Any application for appeal to the board shall be based on a claim that the true intent of the code or the rules legally adopted there under have been incorrectly interpreted, the provisions of the building code do not fully apply or an equally good or better form of construction is proposed.

THIS SPACE FOR OFFICE USE ONLY

Fee Determination Assessment: $ 22,850

Change of occupancy/use: ☐ Yes ☐ No

REVIEWS
- ☐ Structural
- ☐ Mechanical
- ☐ Plumbing
- ☐ Electrical
- ☒ Fire-Life Safety
- ☐ Building Life Safety

INSPECTIONS
- ☐ Structural
- ☐ Mechanical
- ☐ Plumbing
- ☐ Electrical
- ☒ Life Safety
- ☐ Gate/Hazard

Intake Date: 11/24/14

Balance Due: $

PRE APPROVAL Initial ____ ☐ Zoning ☐ Water

Exterior changes? ☐ Yes ☐ No

Homeowner verified: ☐ Yes ☐ No

Permit Type: LT

Mid roof / Ave Bldg Height: N/A

Parent Permit RSN:

Plans Examiner: KD

Subtype: Fire Alarm

RSN: Standalone work no parent

Plans Picked Up By: 953232

Company Name:

Phone Number

2014903431

1400 SOUTH POTOMAC STREET

FIRE ALARM SYSTEM SHOP DRAWINGS FOR:

BUILDING CLASSIFICATIONS AND CODES

OCCUPANCY GROUP:

USE: B-UBC

CONSTRUCTION TYPE: OFFICE

STORIES: TYPE-II-N, SPK-UBC

SPRINKLERED: 2 FLOORS

REQUIREMENTS: FULLY

CODES:

2009 IFC	2007 NFPA 72
2009 IBC	2003 ANSI 17.1
2009 IMC	2005 NFPA 70

MODIFIED PER 2009 IFC

SYSTEM TYPE AND MONITORING

SYSTEM CLASSIFICATION: (NFPA 72, CHAPTER 8), REMOTE STATION

SYSTEM TYPE: ADDRESSABLE/INTELLIGENT

WIRING CLASSIFICATION: NAC – CLASS B
SLC – CLASS B, STYLE B
COMMUNICATION RISER – CLASS A

NOTIFICATION TYPE: TEMPORAL PATTERN

MONITORING: THIS SYSTEM IS AND WILL CONTINUE TO BE MONITORED BY A REMOTE SUPERVISING STATION, PER NFPA 72 CHAPTER 8, SECTION 2.

MONITORING COMPANY: API
(303)427-0880

ACCOUNT: 45-00-2941

DRAWING INFORMATION

FAS WORK ORDER #: 14012075

FAS CAD FILE: FIRE ALARM PANEL REPLACEMENT

SCOPE OF WORK

1. REMOVE AND REPLACE ONE (1) FIRE ALARM CONTROL PANEL.
2. PROVIDE AND INSTALL ONE (1) LCD ANNUNCIATOR BY THE FRONT DOOR.
3. REMOVE AND REPLACE SEVEN (7) PULL STATIONS.
4. REMOVE AND REPLACE EIGHT (8) SMOKE DETECTORS.
5. REMOVE AND REPLACE ONE (1) HEAT DETECTOR.
6. PROVIDE AND INSTALL TWO (2) DUAL MONITOR MODULES TO MONITOR EXISTING FLOW AND TAMPER SWITCHES.
7. PROVIDE AND INSTALL SIX (6) MONITOR MODULES TO MONITOR EXISTING STAND-ALONE TAMPER SWITCHES.
8. PROVIDE AND INSTALL THREE (3) MONITOR MODULES TO MONITOR EXISTING DUCT DETECTORS.
9. PROVIDE AND INSTALL TWO (2) CONTROL RELAYS TO PROVIDE SECURITY AND DOOR HOLDER RELEASE.
10. REMOVE AND REPLACE THREE (3) BOOSTER PANELS.
11. PROVIDE AND INSTALL THREE (3) SYNC MODULES FOR BOOSTER PANEL CONTROL AND SUPERVISION.
12. PROVIDE AND INSTALL TWO (2) SMOKE DETECTORS AT ELEVATOR LANDINGS.
13. PROVIDE AND INSTALL ONE (1) SMOKE DETECTOR IN THE FIRE PUMP CONTROL ROOM.
14. PROVIDE AND INSTALL ONE (1) HEAT DETECTOR IN ELEVATOR MACHINE ROOM WITH-IN 18" OF EXISTING SPRINKLER HEAD.
15. PROVIDE AND INSTALL ONE (1) SMOKE DETECTOR IN ELEVATOR PIT.
16. PROVIDE AND INSTALL ONE (1) HEAT DETECTOR IN ELEVATOR PIT WITH-IN 18" OF ELEVATOR PIT SPRINKLER HEAD.
17. PROVIDE AND INSTALL FOUR (4) CONTROL RELAYS FOR PRIMARY RECALL, ALTERNATE RECALL, HAT LIGHT FUNCTION AND SHUNT TRIP ACTIVATION.
18. PROVIDE AND INSTALL ONE (1) MONITOR MODULE TO MONITOR SHUNT TRIP POWER.
19. PROVIDE AND INSTALL ONE (1) PAM-1 RELAY TO POWER SHUNT TRIP.

INDEX

FA-00 COVER PAGE
GENERAL INFORMATION
BUILDING REQUIREMENTS AND CODES
SCOPE OF WORK
FA-01 1ST FLOOR FIRE ALARM PLAN
LEGEND
GENERAL NOTES
FA-02 2ND FLOOR FIRE ALARM PLAN
WIRING DIAGRAMS
FA-03 TYPICAL WIRING DIAGRAMS
MOUNTING HEIGHTS
TYPICAL WIRING DIAGRAMS
FA-04 CALCS/MATRIX/RISER
ONE-LINE RISER DIAGRAM
WIRE COLOR CODE CHART
BATTERY CALC
SEQUENCE OF OPERATIONS MATRIX
FA-05 PROPOSED GRAPHIC MAP

PROJECT:

FIRE ALARM PANEL REPLACEMENT
1400 SOUTH POTOMAC STREET, 1ST AND 2ND FLOOR
AURORA, CO 80012

OWNER:

CB RICHARD ELLIS
730 SOUTH POTOMAC STREET, SUITE 116
AURORA, CO 80011
PH:(303)360-3178
FAX:(303)360-3014
CRISTA COHEN

ELECTRICAL CONTRACTOR:

FIRE ALARM SERVICES, INC.
4800 W. 60TH AVENUE
ARVADA, CO 80003
PH:(303)466-8800
FAX:(303)466-8820
SHANNON SMITH

FIRE ALARM DESIGNER:

FIRE ALARM SERVICES, INC.
4800 W. 60TH AVENUE
ARVADA, CO 80003
PH:(303)466-8800
FAX:(303)466-8820

Fire Alarm SERVICES, INC.

Fire Alarm Services, Inc.
4800 W. 60th Avenue
Arvada, CO 80003

(303)466-8800 (Phone)
(303)466-8820 (Fax)
contactus@fasonline.cc (E-Mail)
www.fasonline.cc

ADDITIONAL GENERAL NOTES

- THE FIRE ALARM INSTALLATION CONTRACTOR MUST COMPLETE THE NFPA 72 "RECORD OF COMPLETION" PRIOR TO SCHEDULING THE AHJ ACCEPTANCE TEST.
- FIELD INSPECTION CONSULTATION IS AVAILABLE UPON REQUEST. CALL 303-739-7420 TO REQUEST CONSULTATION.
- AUDIBLE ALARM SIGNALING DEVICES SHALL EXCEED THE PREVAILING SOUND LEVEL IN A ROOM OR SPACE BY 15 DBA. SOUND LEVELS FOR ALARM SIGNALS SHALL BE 120 DBA MAXIMUM. IFC SECTION 907.10.2.

GENERAL NOTES

1. FIRE ALARM SYSTEMS CANNOT BE COMBINED WITH BURGLAR ALARM SYSTEMS.
2. THE INSTALLER IS REQUIRED TO COORDINATE WITH THE MECHANICAL CONTRACTOR TO DETERMINE INSTALLATION OF SMOKE DETECTORS OR SENSORS (I.E., NOT CLOSER THAN 3 FEET FROM ANY SUPPLY/RETURN DIFFUSER AND THAT ADDITIONAL DETECTION MAY BE REQUIRED DUE TO THE RELOCATION OR SPACING ADJUSTMENT OF DETECTORS, AS A RESULT).
3. FIRE ALARM DEVICES MUST BE PLACED IN PROTECTED AREAS WITH AMBIENT TEMPERATURE RANGING FROM 32 DEGREES TO 120 DEGREES F.
4. DO NOT PLACE SMOKE DETECTORS WITHIN 3 FEET OF AIR SUPPLY REGISTERS AND DIFFUSERS.
5. FIRE ALARM SYSTEM SHALL BE MONITORED BY A CLASS 1 CENTRAL STATION.
6. FIRE ALARM CONTROL PANEL WILL BE PLACED IN THE LOCATION SPECIFIED WITHIN THE PLAN SUBMITTAL UNLESS APPROVED BY THE LIFE SAFETY FIELD INSPECTOR.
7. CITY OF AURORA BUILDING CODES DIVISION DOES NOT GRANT APPROVAL FOR ANY VIOLATIONS OF ADOPTED FIRE CODE. CODE VIOLATIONS UNCOVERED DURING FIELD INPECTIONS MUST BE CORRECTED.
8. PER THE 2009 IFC AND THE 2005 NEC THE INSTALLER MUST REQUEST A ROUGH WIRING INSPECTION ON THE FIRE ALARM SYSTEM PRIOR TO REQUESTING A FIRE ALARM FINAL INSPECTION.
9. THE CONTRACTOR SHALL CONDUCT A "PRE-TEST" OF THE PROJECT AREA PRIOR TO SCHEDULING AN ACCEPTANCE TEST WITH THE BUILDING CODES DIVISION.
10. REMOTE ALARM INDICATORS SHALL BE PROVIDED FOR ANY FIRE ALARM DETECTOR LOCATED IN A CONCEALED LOCATION WITH A NORMALLY LOCKED DOOR.
11. AT THE TIME OF FINAL FIRE ALARM INSPECTION, THE SYSTEM MUST BE SUPERVISED/MONITORED BY A CLASS 1 CENTRAL MONITORING AGENCY.
12. THE INSTALLING CONTRACTOR (OR DESIGNEE) MUST PROVIDE ALL NECESSARY TESTING EQUIPMENT AND PERORM ALL TESTING REQUIRED BY THE LIFE SAFETY FIELD INSPECTOR.
13. IN-DUCT SMOKE DETECTORS INSTALLED IN CONCEALED LOCATIONS OR, WHERE THE DETECTORS ALARM INDICATOR IS NOT READILY VISIBLE TO RESPONDING PERSONNEL SHALL BE PROVIDED WITH A REMOTE INDICATOR, REMOTE TEST STATION AND PLACARDING.
14. ALL NEW OR EXISTING FIRE ALARM SYSTEMS MUST BE CONNECTED TO ANY EXTERIOR HORN AND STROBE DEVICE. IF THE BUILDING IS FIRE SPRINKLED, A GENERAL ALARM ACTIVATION AT THE FIRE ALARM CONTROL PANEL WILL ACTIVATE THE EXTERIOR HORN AND STROBE. SILENCING THE PANEL MUST ALLOW THE VISUAL DEVICE TO CONTINUE UNTIL THE PANEL IS RESET.
15. FIRE ALARM SYSTEMS SHALL INCLUDE BOTH AUDIBLE AND VISUAL ALARMS. VISUAL ALARMS WILL BE REQUIRED IN ALL ACCESSIBLE PUBLIC AND COMMON- USE AREAS PER THE 2009 IFC AND THE 2003 ANSI A117.1 STANDARD.
16. PROVIDE A PRIMARY AND SECONDARY POWER SUPPLY FOR THE FIRE ALARM SYSTEM PER THE 2009 IFC, SECTION 907.5 AND THE 2007 NFPA 72.

City of Aurora Building Division
Project: FACP & INITIATING DEVICE REPLACEMENT
Address: 1400 S. POTOMAC
Occupancy Group: IBC B / 55,000 SF
Construction Type: UBC-II-N, SPK
RSN: 9552-32
Permit: 2014903431

AURORA BUILDING DEPARTMENT
LIFE SAFETY SYSTEMS
APPROVED
SUBJECT TO CORRECTIONS AS INDICATED AND FIELD INSPECTIONS WITH FUNCTIONAL TESTS
SIGNED 12-17-14 DATE
2014903431

Ray Breeland
Nicet Fire Alarm systems
Level III
Certification #111066
Date: 11/21/14
RJM

Fire Alarm SERVICES, INC.
4800 W. 60TH AVENUE
ARVADA, CO 80003
phone: 303-466-8800
fax: 303-466-8820
www.fasonline.cc email: contactus@fasonline.cc

REVISIONS	NO.	DATE

DRAWN BY: L. BACON
DATE: 11/18/2014
APPR. BY:
DATE:

PROJECT TITLE: FIRE ALARM SYSTEM REPLACEMENT FOR: FIRE ALARM PANEL REPLACEMENT
BUILDING NAME & ADDRESS: 1400 SOUTH POTOMAC STREET 1400 S. POTOMAC ST. AURORA, CO 80012
PROJECT NUMBER: 14012075

FIRE ALARM & DETECTION SYSTEM
DRAWING TITLE: 1ST AND 2ND FLOOR COVER PAGE
SCALE: N/A

PROJECT SHEET TITLE
FA-00

FIRE ALARM SYMBOLS LEGEND

EXISTING	DESCRIPTION	PROPOSED	EXISTING	DESCRIPTION	PROPOSED
	STROBE – Wall Mount or CM = Ceiling Mount		CT1	MONITOR–MODULE	CT1
	SMOKE DETECTOR – x = photo, ion		FACP	FIRE ALARM CONTROL PANEL	FACP
	HORN STROBE – Wall Mount or CM = Ceiling Mount		CT2	DUAL MONITOR–MODULE	CT2
EOLR	END OF LINE RESISTOR	EOLR	CR	CONTROL RELAY	CR
F	PULL STATION	F	CCIS	SYNC–MODULE	CCIS
	HEAT DETECTOR – x =135, 200, ROR		BSTR	BOOSTER PANEL	BSTR
	TAMPER SWITCH		PAM1	PAM–1 RELAY	PAM1
	FLOW SWITCH				

J = J–BOX
RPL = REMOVE AND REPLACE DEVICE

NOTIFICATION APPLIANCE CIRCUIT NUMBER
NOTIFICATION APPLIANCE PANEL NUMBER
DEVICE NUMBER
NAC1-2-3
POWER EXPANDER NUMBERING

GENERAL NOTES:

1. THE CEILING IS A TYPICAL 9' A.F.F. DROPPED CEILING WITH NO SLOPES.
2. ALL NOTIFICATION DEVICES ARE EXISTING TO REMAIN AND WILL ONLY BE UPGRADED DURING FUTURE TENANT FINISHES. THIS PROJECT AND SCOPE OF WORK IS TO REPLACE THE PANEL AND ALL INITIATING DEVICES ONLY.

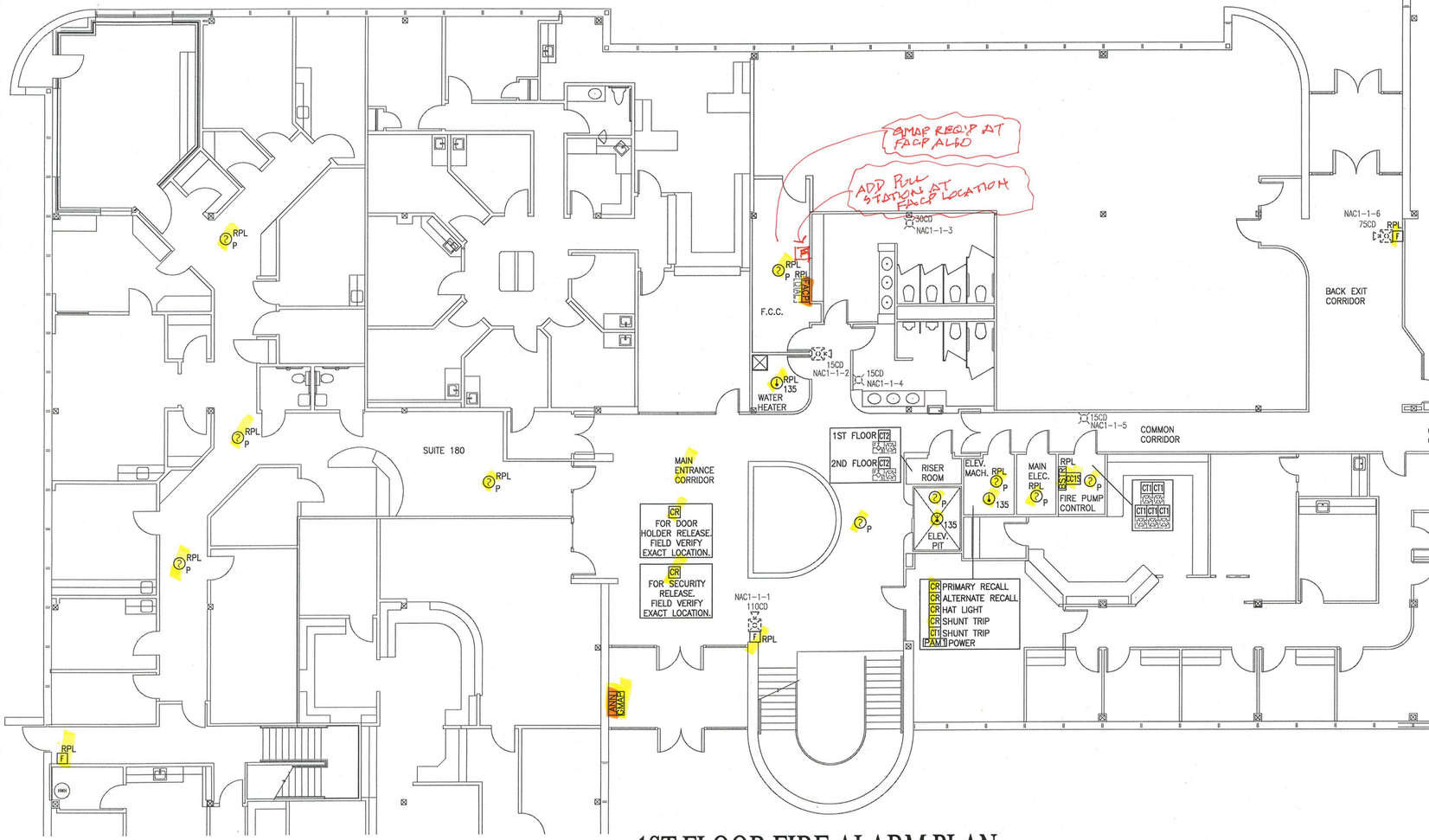

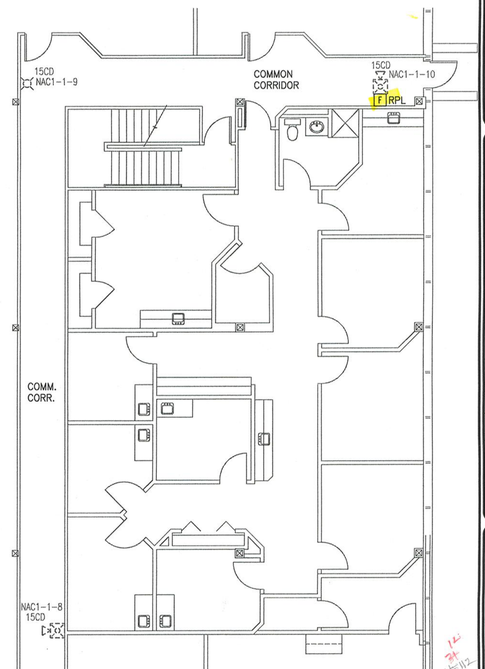

1ST FLOOR FIRE ALARM PLAN

SCALE: 1/8" = 1'-0"

NORTH 0 5 10 15 30 FEET

AURORA BUILDING DEPARTMENT
LIFE SAFETY SYSTEMS
APPROVED
SUBJECT TO CORRECTIONS AS INDICATED AND FIELD INSPECTIONS WITH FUNCTIONAL TESTS
12-17-14
SIGNED DATE
2014803131

Ray Breeland
Nicet Fire Alarm systems
Level III
Certification #111066
Date: 11/21/14

Fire Alarm Services, Inc.
4800 W. 60TH AVENUE phone: 303-466-8800
ARVADA, CO 80003 fax: 303-466-8820
www.fasonline.cc email: contactus@fasonline.cc

REVISIONS

NO.	DATE

DRAWN BY: L. BACON
DATE: 11/18/2014
APPR. BY:
DATE: 11/21/14

PROJECT TITLE: FIRE ALARM SYSTEM REPLACEMENT FOR: FIRE ALARM PANEL REPLACEMENT
BUILDING NAME & ADDRESS: 1400 S. POTOMAC, 1400 S. POTOMAC ST., AURORA, CO 80012
PROJECT NUMBER: 14012075

FIRE ALARM & DETECTION SYSTEM
DRAWING TITLE: 1ST FLOOR FIRE ALARM PLAN
SCALE: AS SHOWN

PROJECT SHEET TITLE
FA–01

SMOKE/HEAT DETECTOR WIRING

STANDARD DETECTORS:
SIGA-PS, SIGA-PHS,
SIGA-IS,
SIGA-HRS, SIGA-HFS
STANDARD DETECTOR BASE:
SIGA-SB, SIGA-SB4

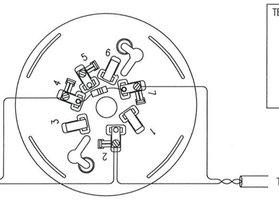

TERM	DESCRIPTION
1	NOT USED
2	SLC DATA IN/OUT (+)
3	NOT USED
4	SLC DATA IN (-)
4	REMOTE LED (-)
5	REMOTE LED (+)
6	NOT USED
7	SLC DATA OUT (-)

FROM SIGNATURE CONTROLLER OR PREVIOUS SLC DEVICE

TO NEXT SLC DEVICE

135 P

SIGA-278 PULL STATION WIRING

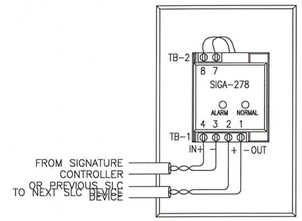

FROM SIGNATURE CONTROLLER OR PREVIOUS SLC DEVICE

TO NEXT SLC DEVICE

F

2ND FLOOR FIRE ALARM PLAN

SCALE: 1/8" = 1'-0"

NORTH 0 5 10 15 30 FEET

AURORA BUILDING DEPARTMENT
LIFE SAFETY SYSTEMS
APPROVED
SUBJECT TO CORRECTIONS AS INDICATED AND FIELD INSPECTIONS WITH FUNCTIONAL TESTS
SIGNED 12-17-14 DATE
2014903431

Ray Breeland
Nicet Fire Alarm systems
Level III
Certification #111066
Date: 11/21/14

Fire Alarm SERVICES, INC.
4600 W. 60TH AVENUE phone: 303-466-8800
ARVADA, CO 80003 fax: 303-466-8820
www.fasonline.cc email: contactus@fasonline.cc

REVISIONS	NO.	DATE

DRAWN BY: L. BACON
DATE: 11/18/2014
APPR. BY:
DATE:

PROJECT TITLE	FIRE ALARM SYSTEM REPLACEMENT FOR: FIRE ALARM PANEL REPLACEMENT
BUILDING NAME & ADDRESS	1400 S. POTOMAC 1400 S. POTOMAC ST. AURORA, CO 80012
PROJECT NUMBER	14012075

FIRE ALARM & DETECTION SYSTEM
DRAWING TITLE: 2ND FLOOR FIRE ALARM PLAN
SCALE: AS SHOWN

PROJECT SHEET TITLE
FA-02

FLOW AND TAMPER SWITCH MONITOR WIRING

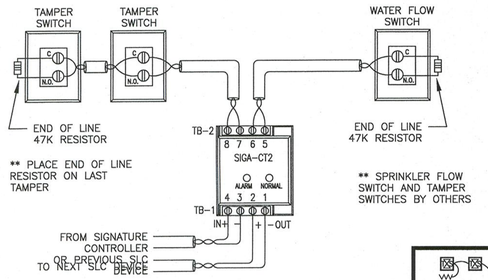

FLOW/TAMPER SWITCH MONITOR WIRING

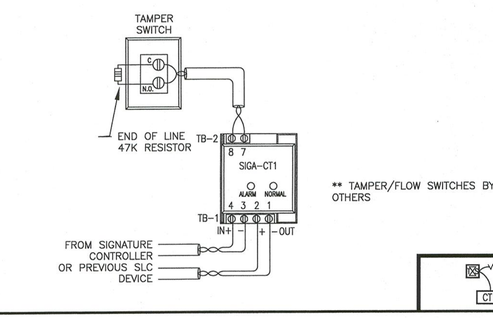

ELEVATOR RECALL CONTROL WIRING

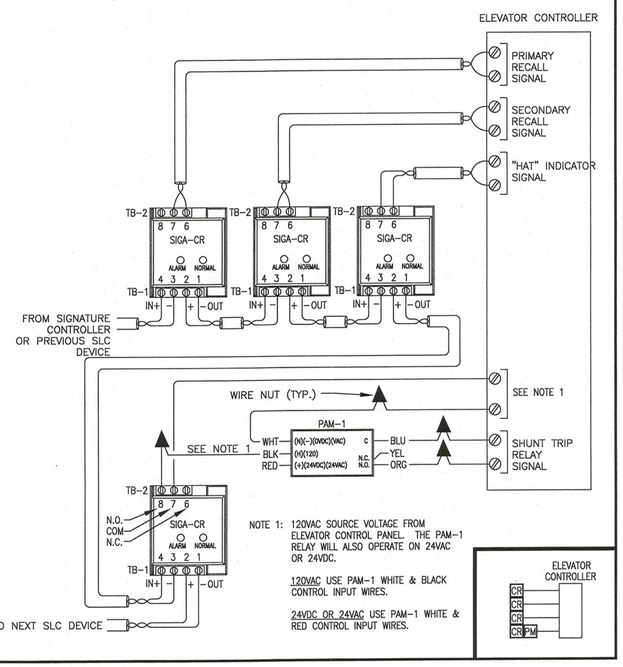

SIGA-CR CONTROL RELAY WIRING

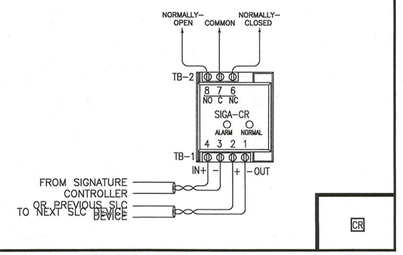

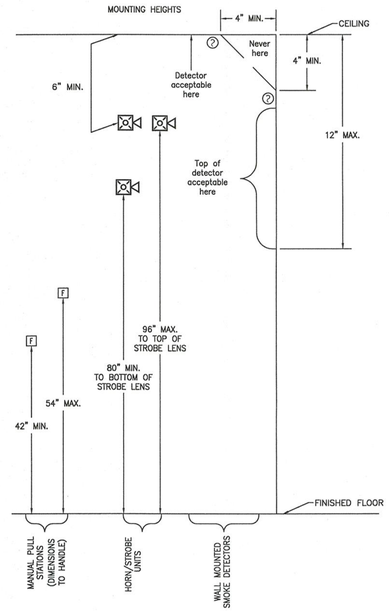

ANNUNCIATOR

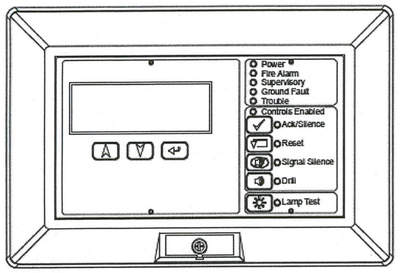

PAM-1 RELAY

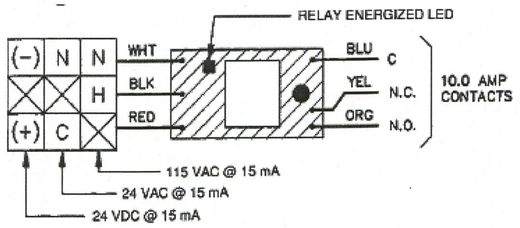

BACK OF FACP

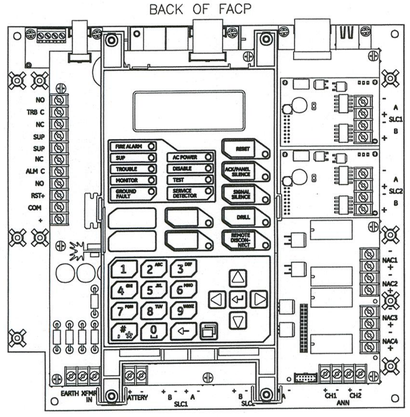

FRONT OF FACP

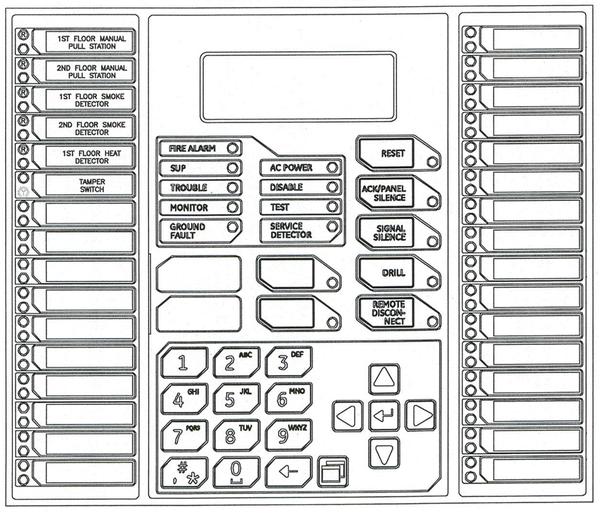

SIGA-CC1S SYNC MODULE WIRING

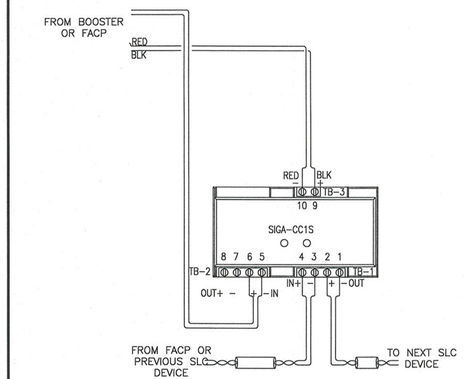

AURORA BUILDING DEPARTMENT
LIFE SAFETY SYSTEMS
APPROVED
SUBJECT TO CORRECTIONS AS INDICATED AND FIELD INSPECTIONS WITH FUNCTIONAL TESTS
12-17-14
SIGNED DATE

2014903431

Ray Breeland
Nicet Fire Alarm systems
Level III
Certification #111066
Date: 11/21/14

Fire Alarm SERVICES, INC.
4800 W. 60TH AVENUE
ARVADA, CO 80003
phone: 303-466-8800
fax: 303-466-8820
www.fasonline.cc email: contactus@fasonline.cc

REVISIONS	NO.	DATE

DRAWN BY: L. BACON
DATE: 11/18/2014
APPR. BY:
DATE: 11/18/14

PROJECT TITLE: FIRE ALARM SYSTEM REPLACEMENT FOR: FIRE ALARM PANEL REPLACEMENT
BUILDING NAME & ADDRESS: 1400 S. POTOMAC, 1400 S. POTOMAC ST., AURORA, CO 80012
PROJECT NUMBER: 14012075

FIRE ALARM & DETECTION SYSTEM
DRAWING TITLE: 1ST AND 2ND FLOOR TYPICAL WIRING DIAGRAMS
SCALE: N/A

PROJECT SHEET TITLE
FA-03

BATTERY CALCULATIONS

FOR: 1400 SOUTH POTOMAC STREET
AURORA, CO 80012

HOURS OF SUPERVISION: 24 HOURS
MINUTES OF ALARM: 5 MINUTES

PANEL: EST I0500

ITEM	QTY	PART NUMBER	DESCRIPTION	Device Supervisory Current	Device Alarm Current	Total Supervisory Current	Total Alarm Current
1	1	I0500R	Fire Alarm Control Panel	0.172000	0.267000	0.172000	0.267000
2	1	RLCD-C	CPU/LCD Display Unit (remote annunciator)	0.099000	0.115000	0.099000	0.115000
			TOTAL:			0.271000	0.382000

PERIPHERAL:

ITEM	QTY	PART NUMBER	DESCRIPTION	Device Supervisory Current	Device Alarm Current	Total Supervisory Current	Total Alarm Current
1	3	EXISTING	Duct Detector w/ Housing	0.000045	0.000045	0.000135	0.000135
2	3	SIGA-HFS	Heat Detector	0.000045	0.000045	0.000135	0.000135
3	7	SIGA-278	Manual Pull Station	0.000250	0.000400	0.001750	0.002800
4	12	SIGA-PS	Photoelectric Smoke Detector	0.000045	0.000045	0.000540	0.000540
5	3	SIGA-CC1S	Single Input Signal Module (Sync Module)	0.000223	0.000100	0.000669	0.000300
6	10	SIGA-CT1	Single Input Module (Monitor Module)	0.000250	0.000400	0.002500	0.004000
7	2	SIGA-CT2	Dual Input Module (Monitor Module)	0.000396	0.000680	0.000792	0.001360
8	6	SIGA-CR	Control Relay Module	0.000100	0.000100	0.000600	0.000600
9	1	PAM-1	Multi-Voltage Control Relay	0.000000	0.015000	0.000000	0.015000
			TOTAL:			0.007121	0.024870

SUPERVISORY:
PANEL: 0.271000 AMPS
PERIPHERAL 0.007121 AMPS
SUB-TOTAL: 0.278121 AMPS
X HOURS OF SUPERVISORY: 24.0000 HOURS
SUB-TOTAL: 6.674904 AMP HOURS

ALARM:
PANEL: 0.382000 AMPS
PERIPHERAL: 0.024870 AMPS
SUB-TOTAL: 0.406870 AMPS
X MINUTES OF ALARM: 0.08333 HOURS
SUB-TOTAL: 0.033906 AMP HOURS

TOTALS:
TOTAL SUPERVISORY: 6.674904 AMP HOURS
TOTAL ALARM: 0.033906 AMP HOURS
TOTAL: 6.708810 AMP HOURS

TOTAL PLUS SAFETY FACTOR(20%) 8.05057 AMP HOURS
Batteries Supplied - 1 Set of: 7.00000 AMP HOURS

INSTALLED BATTERIES SHALL HAVE A RATING HIGHER THAN MAX. 8.05 AMP HOURS

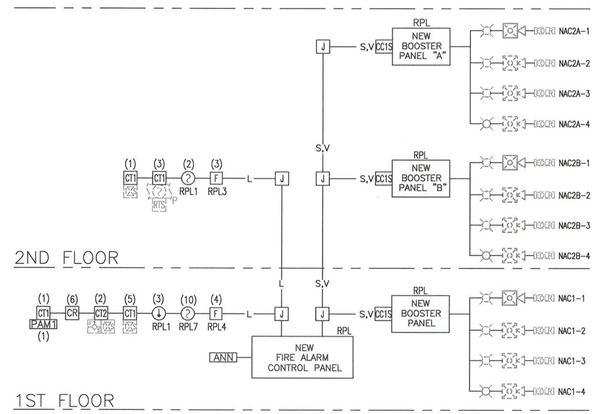

ONE-LINE RISER DIAGRAM

FIRE ALARM WIRE COLOR CODE CHART				
Code	Description	Wire Type	Color (+)	Color (-)
AC	120VAC Power Wiring	3#12 AWG Solid (w/ Green Ground)	Black (hot)	White (neu)
A	Annunciator Wiring	#18 AWG Twisted/Shielded Pair	Red	Black
D	Door Holder Wiring	2#14 AWG Solid	Red	Black
L	SLC Wiring (Signaling Line Circuit)	2#18 AWG Solid	Red	Black
P	24VDC Power Wiring	2#16 AWG Solid	Red	Black
R	Remote Light/Test Wiring	2#18 AWG Solid	Red	Black
S	Notification Appliance (Horns) Wiring	2 or 4#14 AWG Solid	Red	Black
S	Notification Appliance (Speaker) Wiring	2#16 AWG Twisted/Shielded Pair	Red	Black
T	Telephone Circuit Wiring	2#16 AWG Twisted/Shielded Pair	Red	Black
V	Notification Appliance (Strobe) Wiring	2 or 4#14 AWG Solid	Red	Black
X	Auxiliary Circuit (Relay) Wiring	2#14 AWG Solid	Red	Black
Z	IDC Wiring (Initiating Device Circuit)	2#18 AWG Solid	Red	Black
WIRE TYPE CLASS & STYLE	SLC - CLASS B - STYLE 4	NAC - CLASS B		

1400 S. POTOMAC BUILDING SEQUENCE OF OPERATIONS

SYSTEM INPUTS

SYSTEM OUTPUTS

		FACP Annunciation							Notification				Fire Safety Ctrl.						Monitoring				
		Actuate Common Alarm Signal Indicator	Actuate Audible Alarm Signal	Actuate Common Supervisory Signal Indicator	Actuate Audible Supervisory Signal	Actuate Common Trouble Signal Indicator	Actuate Audible Common Trouble Signal	Display Change of Status	Actuate 1st Floor Evacuation Signals (Horn/Strobes)	Actuate 2nd Floor Evacuation Signals (Horn/Strobes)	Actuate Exterior Horn/Strobe	Silence Audible Signal (Horns)	Release Magnetically Held Smoke Doors	Recall Elevator(s) to 1st Floor - Primary Recall	Recall Elevator(s) to 2nd Floor - Alternate Recall	Shut Down Air Handling Units	Activate Hat-Light	Activate Shunt-Trip	Transmit Fire Alarm Signal to Supervising Station	Transmit Trouble Signal to Supervising Station	Transmit Supervisory Signal to Supervising Station	Transmit Waterflow Signal to Supervising Station	
		A	B	C	D	E	F	G	H	I	J	K	L	M	N	O	P	Q	R	S	T	U	
1	Manual Pull Station - 1st Floor	X	X					X	X	X	X		X						X				1
2	Manual Pull Station - 2nd Floor	X	X					X	X	X	X		X						X				2
3	Smoke Sensor - 1st Floor Elev Lobby	X	X					X	X	X	X		X		X				X				3
4	Smoke Sensor - 2nd Floor Elev Lobby	X	X					X	X	X	X		X	X					X				4
5	Smoke Sensor - 1st Floor Elev Pit	X	X					X	X	X	X		X	X			X		X				5
6	Smoke Sensor - 1st Floor Elev Machine Room	X	X					X	X	X	X		X	X			X		X				6
7	Smoke Sensor - All Other Locations	X	X					X	X	X	X		X						X				7
8	Heat Sensors - 1st Floor	X	X					X	X	X	X		X						X				8
9	Heat Sensors - 1st Floor Elev. Pit	X	X					X	X	X	X		X					X	X				9
10	Heat Sensors - 1st Floor Elev Machine Room	X	X					X	X	X	X		X						X				10
11	Duct Detector - 2nd Floor			X	X			X								X					X		11
12	Sprinkler Waterflow - 1st Floor	X	X					X	X	X	X		X						X			X	12
13	Sprinkler Waterflow - 2nd Floor	X	X					X	X	X	X		X						X			X	13
14	Sprinkler Control Valve			X	X			X													X		14
15	FACP AC Power Failure					X	X	X					X							X				15
16	FACP Low Battery					X	X	X												X				16
17	Open Circuit					X	X	X												X				17
18	Ground Fault					X	X	X												X				18
19	Notification Appliance Circuit Short					X	X	X												X				19
20	Alarm Signal Silence											X												20
		A	B	C	D	E	F	G	H	I	J	K	L	M	N	O	P	Q	R	S	T	U	

AURORA BUILDING DEPARTMENT
LIFE SAFETY SYSTEMS
APPROVED
SUBJECT TO CORRECTIONS AS INDICATED AND FIELD INSPECTIONS WITH FUNCTIONAL TESTS
SIGNED 12-17-14 DATE

2014903431

Ray Breeland
Nicet Fire Alarm systems
Level III
Certification #111066
Date: 11/21/14

Fire Alarm Services, Inc.
4800 W. 60TH AVENUE phone: 303-466-8800
ARVADA, CO 80003 fax: 303-466-8820
www.fasonline.cc email: contactus@fasonline.cc

REVISIONS | NO. | DATE

DRAWN BY: L. BACON | DATE: 11/18/2014 | APPR. BY: | DATE:

PROJECT TITLE: FIRE ALARM SYSTEM REPLACEMENT FOR: FIRE ALARM PANEL REPLACEMENT

BUILDING NAME & ADDRESS: 1400 S. POTOMAC, 1400 S. POTOMAC ST. AURORA, CO 80012

PROJECT NUMBER: 14012075

FIRE ALARM & DETECTION SYSTEM

DRAWING TITLE: 1ST AND 2ND FLOOR CALCS/MATRIX/RISER

SCALE: N/A

PROJECT SHEET TITLE: FA-04

1400 SOUTH POTOMAC STREET

AURORA, CO 80012

NORTH

NOTE:

1. PROPOSED GRAPHIC MAP FOR 1400 SOUTH POTOMAC STREET: DEVICE ADDRESSES ARE SUBJECT TO FIELD VERIFICATION BEFORE INSTALLATION AND FINAL INSPECTION BY AURORA FIRE DEPARTMENT. GRAPHIC MAP HAS BEEN SCALED UP TO FIT PAGE.

Fire Alarm SERVICES, INC.
(303) 466-8800

DATE: 11/18/2014

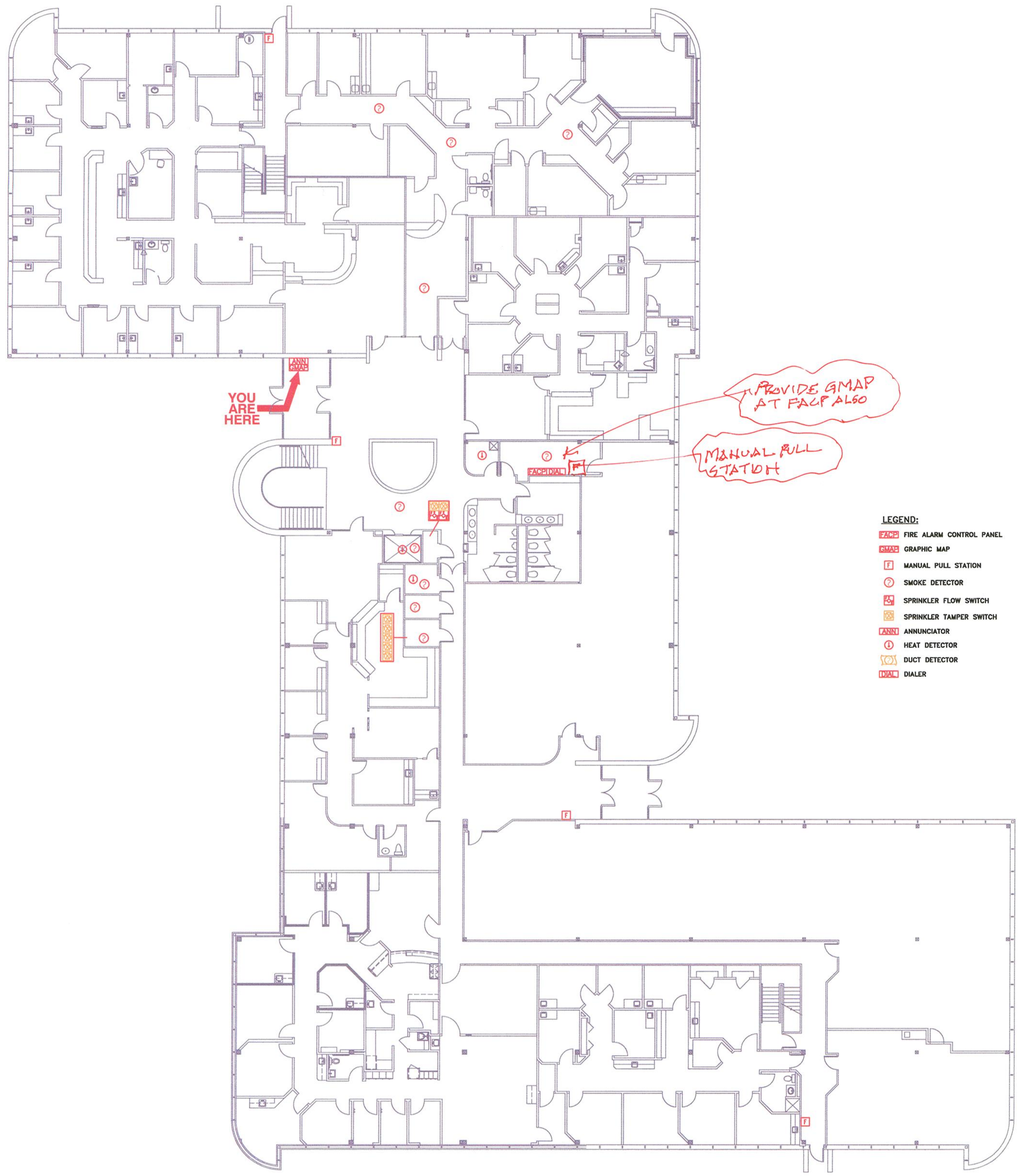

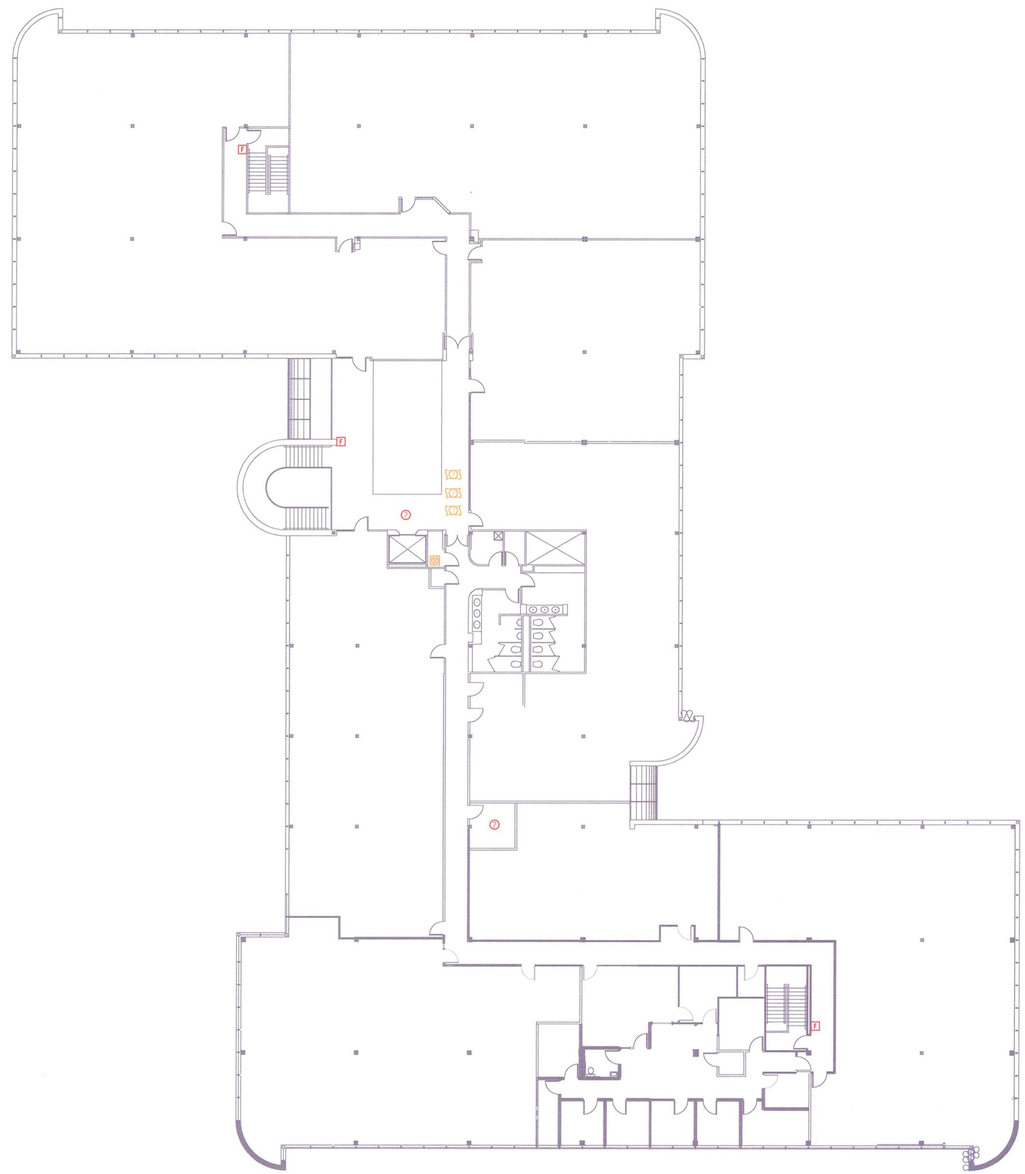

AURORA BUILDING DEPARTMENT
LIFE SAFETY SYSTEMS
APPROVED
SUBJECT TO CORRECTIONS AS INDICATED AND FIELD INSPECTIONS WITH FUNCTIONAL TESTS
SIGNED 12-17-14 DATE
2014903431

Ray Breeland
Nicet Fire Alarm systems
Level III
Certification #111066
Date: 11/21/14

Fire Alarm SERVICES, INC.
4800 W. 60TH AVENUE
ARVADA, CO 80003
phone: 303-466-8800
fax: 303-466-8820
www.fasonline.cc email: contactus@fasonline.cc

REVISIONS

NO.	DATE

DRAWN BY: L. BACON
DATE: 11/18/2014
APPR. BY:
DATE:

PROJECT TITLE: FIRE ALARM SYSTEM REPLACEMENT FOR: FIRE ALARM PANEL REPLACEMENT

BUILDING NAME & ADDRESS: 1400 S. POTOMAC, 1400 S. POTOMAC ST., AURORA, CO 80012

PROJECT NUMBER: 14012075

FIRE ALARM & DETECTION SYSTEM

DRAWING TITLE: PROPOSED GRAPHIC MAP

SCALE: N/A

PROJECT SHEET TITLE

FA-05

Fire Alarm System Acceptance Inspection

2009 IFC and 2007 NFPA 72

This worksheet is for jurisdictions that permit the use of 2007 NFPA 72 in lieu of IFC's referenced 2002 NFPA 72.

Date of Inspection: _____ Permit Number: 20149034 31

Business/Building Name: MEDICAL OFFICE BLDG Address of Project: 14005. POTOMAC ST

Contractor: FIRE ALARM SERVICES Contractor's Phone: 3-46C-8800

Reference numbers following worksheet statements represent an NFPA code section unless otherwise specified.

Pass	Fail	NA	General	
				General
1. ____	____	____		Obtained a copy of the fire alarm installation certification and a Record of Completion from installer, 4.5.2.1.
2. ____	____	____		Approved plans are on site.
3. ____	____	____		Fire alarm control unit (FACU) and remote annunciator (RA) are installed consistent with approved plans, 4.4.6.1.1. and 7.10.
4. ____	____	____		A zone and legend map is provided at the RA or an approved location.
5. ____	____	____		Fire alarm zones are properly identified on the FACU and RA panels.
6. ____	____	____		The fire alarm system power supply is a dedicated 120 AC branch circuit, which is labeled, 4.4.1.4.2.2.
7. ____	____	____		Type and gauge of wire or cable(s) for each circuit are consistent with the plans.
8. ____	____	____		Device location and installation are consistent with the plans.
9. ____	____	____		Pull stations are installed at the proper height and location, 42 in. to 48 in. and within the 200 ft. maximum travel distance, 5.13 and IFC 907.5.2.1 and 907.5.2.2.
10. ____	____	____		A Contractor Sound Pressure Level (dBA) Pretest Room Log is provided and verified with the use of a sound meter during a sound pressure test.
				Operational
11. ____	____	____		Fire alarm audible notification devices sound throughout the occupancy providing a sound pressure level at least a minimum of 15 dBA above the average ambient noise level or 5 dBA above the maximum noise level. For bedrooms with closed door provide at least 75 dBA at the pillow, 7.4.4.1, IFC 907.6.2.1.1.
12. ____	____	____		Fire alarm audible devices are a three-pulse temporal pattern unless they were permitted to match existing audible devices, 6.8.6.5.1.
13. ____	____	____		Fire alarm visual notification device intensity (cd) ratings and settings, mounting height (80 in. to 96 in.), and location, are consistent with the plans, 7.5.4.1.
14. ____	____	____		Emergency voice/ alarm communications systems is tested and documentation is provided documenting the verbal statement(s) are distinguishable and understandable, Table 10.4.2.2.15(b).
15. ____	____	____		In sprinklered buildings, the fire alarm notification devices will activate by operation of the sprinkler flow alarm.
16. ____	____	____		HVAC duct detectors are supervised by the fire alarm system, detectors are all tested to verify if they can sample the air stream, fans shut down upon activation and visual and audible status alarm functions, Table 10.4.2.2.14(g).
17. ____	____	____		A central, remote or proprietary monitoring service received various signals during system tests.
18. ____	____	____		Verify that the correct and distinctive signals are received (alarm, trouble, and supervisory alarms), 4.4.3.3, 10.4.1.1
19. ____	____	____		Two monitoring circuits are provided, both circuits send correct signals to monitoring company within 90 seconds, Table 10.4.2.2.16.
20. ____	____	____		Verify proper operation of magnetic door-releasing hardware and/or ventilation shutdown.
21. ____	____	____		Sprinkler tamper switch activation transmits a trouble signal at the annunciator panel.
22. ____	____	____		Fire department communications system, if provided, is operational.
23. ____	____	____		For air sampling and flame detectors, test the device in accordance with the manufacturer's instructions.
24. ____	____	____		Restoreable heat and smoke detectors, and pull stations are tested.
25. ____	____	____		Trouble condition is created for each circuit and the FACU responds appropriately.
26. ____	____	____		Remote annunciator displays the correct zone and device information.

2014903431

27. ____|____ | ____ Battery load test: the system is switched to battery operation 24 hours before the test and in the presence of the inspector the notification devices are activated and operate for 5 minutes or 15 minutes for emergency voice alarms.
28. ____|____ | ____ Check battery charger, measure load voltage, and open circuit voltage.
29. ____|____ | ____ Test ground-fault monitoring circuit, if provided.
30. ____|____ | ____ Under primary and secondary power, perform these tests:
    - ____|____ | ____ A. power light on and in normal condition, trouble signal when on secondary power.
    - ____|____ | ____ B. supervisory signals: fire pump power loss or phase reversal, water level/temp, pressure switches, control valves, etc.
    - ____|____ | ____ C. silence switch functions.
    - ____|____ | ____ D. a 2nd alarm initiating zone overrides silence switch.
    - ____|____ | ____ E. trouble signals and FACU panel lights operate for each circuit tested; disconnect .wires from devices and primary power supply to simulate trouble conditions.
    - ____|____ | ____ F. on secondary power, measure standby and alarm current demand.
    - ____|____ | ____ G. trouble and alarm reset switches operate.
    - ____|____ | ____ H. emergency voice alarms: the message is clear and distinct.
    - ____|____ | ____ I. initiating devices tested, audible sound pressure levels, and visuals operate.
    - ____|____ | ____ J. panel lamp test switch operates: if provided.
    - ____|____ | ____ K. field zones and device address signals corresponded with panel zones and addresses.
    - ____|____ | ____ L. elevator(s) recall to designated floor and alternate floor in accordance with 6.16.3.
31. ____|____ | ____ Other systems activate fire alarm: kitchen hood suppression system, clean agent, etc.
32. ____|____ | ____ As-builts are required when system installation is not consistent with the plans.
33. ____|____ | ____ Circuit loop resistance is within specifications and a test may be required if the system wiring has changed from the plans.
34. ____|____ | ____ Heat and spot smoke detectors are not within 4 in. of the sidewall, or if on the sidewall, the detector is 4 in. to 12 in. from the ceiling, 5.6.3.1, 5.7.3.2.1.
35. ____|____ | ____ Visual devices in a room or adjacent space with more than 2 devices within the field of view the flash are synchronized, 7.5.4.1.2(3). Devices in a corridor with more than 2 devices within the field of view and a maximum spacing of 100 ft., are synchronized, 7.5.4.2.5 and 7.5.4.2.7.
36. ____|____ | ____ Visual devices are wall mounted 80 in. to 96 in. above the floor level unless otherwise permitted by the approved plans and the fire code official, 7.5.4.1.
37. ____|____ | ____ Supplemental (extra) visual devices are permitted to be mounted less than 80 in. above the floor, 7.7.2.
38. ____|____ | ____ Ceiling-mounted devices are listed for use and spaced in accordance with Table 7.5.4.1.1(b) and the approved plans.

*Note: additional testing criteria is found in NFPA 72: Chapter 10.

Additional Comments:

Inspection Date: _____ Approved or Disapproved FD Inspector: _____

Inspection Date: _____ Approved or Disapproved FD Inspector: _____

Fire Alarm Installation Certification

Permit #: 2014903431 Date: _____

	Property Protected	System Installer	System Supplier
Business Name:	MEDICAL BUILDING	FIRE ALARM	
Address:	14005. POTOMAC	SERVICES	
Representative:			
Telephone:			

Location of Plans: _____

Location of Owner's Manual: _____

1. Certification of System Installation: Complete this section after system is installed, but prior to conducting operational acceptance tests. Check wiring for opens, ground faults, and improper branching.

   This system installation was inspected and found to comply with the installation requirements of:
   _____ NFPA 72
   _____ Article 760 of NEC
   _____ Manufacturer's Instructions
   _____ Other (specify; FM, UL, etc.) _____

   Print Name: _____

   Signed: _____ Date: _____

   Organization: _____

2. Certification of System Operation: All operational features and functions of this system were tested and found to be operating properly in accordance with the requirements of:
   _____ NFPA 72
   _____ Design Specifications
   _____ Manufacturer's Instructions
   _____ Other (specify) _____

   Print Name: _____

   Signed: _____ Date: _____

   Organization: _____

Fire Alarm Services, Inc.
4800 W. 60th Avenue
Arvada, CO 80003

Phone (303) 466-8800
Fax (303) 466-8820

2014903431

Fire Alarm System Addition at:

Project: Fire Alarm Panel Replacement
1400 S. Potomac Street
Aurora, CO 80012

Scope of Work:

1. Remove and replace one (1) fire alarm control panel.
2. Provide and install one (1) LCD annunciator by the front door.
3. Remove and replace seven (7) pull stations.
4. Remove and replace eight (8) smoke detectors.
5. Remove and replace one (1) heat detector.
6. Provide and install two (2) dual monitor modules to monitor existing flow and tamper switches.
7. Provide and install six (6) monitor modules to monitor existing stand-alone tamper switches.
8. Provide and install three (3) monitor modules to monitor existing duct detectors.
9. Provide and install two (2) control relays to provide security and door holder release.
10. Remove and replace three (3) booster panels.
11. Provide and install three (3) sync modules for booster panel control and supervision.
12. Provide and install two (2) smoke detectors at elevator landings.
13. Provide and install one (1) smoke detector in the fire pump control room.
14. Provide and install one (1) heat detector in elevator machine room with-in 18" of existing sprinkler head.
15. Provide and install one (1) smoke detector in elevator pit.
16. Provide and install one (1) heat detector in elevator pit with-in 18" of elevator pit sprinkler head.
17. Provide and install four (4) control relays for primary recall, alternate recall, HAT light function and shunt trip activation.
18. Provide and install one (1) monitor module to monitor shunt trip power.
19. Provide and install one (1) PAM-1 relay to power shunt trip.

Ray Breeland
Nicet Fire Alarm systems
Level III
Certification #111066
Date: 11/21/14

GE
Security

EST Fire & Life Safety
Small Analog Systems
2014903431

Overview

The EST iO500 intelligent life safety system offers the power of high-end intelligent processing in a configuration that delivers an uncomplicated solution for small to mid-sized applications. With intelligent detection, electronic addressing, automatic device mapping, optional Ethernet® connectivity, and a full line of easily-configured option cards and modules, this flexible system offers offers versatility that benefits building owners and contractors alike.

The iO500 provides one Class A or Class B analog device loop that supports up to 250 device addresses. A second 250-point loop may be added to the iO500 to expand total system capacity to up to 500 device addresses. The panel includes four NACs that may be wired for either Class A or Class B operation.

The iO500 supports a wide range of accessories and related equipment, including:

- Signature Series intelligent modules, detectors, and bases
- R-Series remote annunciators
- option cards that expand system capacity and extend system capabilities.

Features

- Comes standard with one loop (expandable to two) that supports up to 250 (expandable to 500) intelligent devices: each iO500 loop supports up to 125 detectors and up to 125 modules.
- Supports Signature Series intelligent modules and detectors
- Four Class B NACs or two Class A NACs.
- Form C contacts for alarm and trouble, Form A for supervisory
- Electronic addressing with automatic device mapping
- Optional Ethernet port for diagnostics, programming and a variety of system reports
- Two programmable switches with LEDs and custom labeling
- Supports Genesis horn silence over two wires and UL 1971-compliant strobe synchronization
- Standard Class A wiring
- Supports up to eight serial annunciators, (LCD, LED-only, and graphic interface).
- Can use existing wiring for most retrofit applications
- Upload/download remotely or locally
- Two-level maintenance alert reporting
- Pre-alarm and alarm verification by point
- Adjustable detector sensitivity
- 4 x 20 character backlit LCD display

iO500 Intelligent Life Safety System

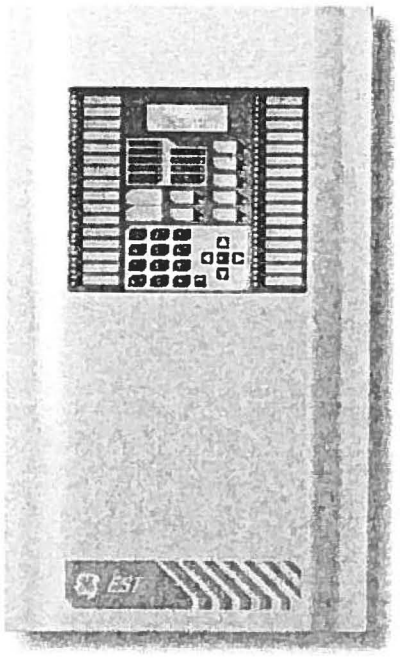

Application

The iO500 life safety system is a powerful intelligent solution for small to mid-sized buildings. Advanced analog technology delivers the benefits of flexible system installation, while a clean and easy-to-operate user interface makes panel operation and system maintenance quick and intuitive.

The smart choice

Signature Series electronic addressing eliminates the tedium of setting dipswitches, and automatic device mapping ensures that each device resides on the system at its correct location. Meanwhile, innovative programming allows the designer to customize the system to precisely suit the needs of the building owner.

Flexibility built right in

Two fully-programmable front panel switch/LED combinations provide an added measure of flexibility. Their slide-in labels take the mystery out of custom applications, and present a clean finished appearance.

Perfect for retrofits

The iO500 is particularly well-suited to retrofit applications. All connections are made over standard wiring – no shielded cable required. This means that in most situations existing wiring can be used to upgrade a legacy control panel to iO500 technology without the expense or disruption of rewiring the entire building.

Signals with a difference

iO500 NACs are configurable to fully support the advanced signaling technology of GE Genesis and Enhanced Integrity notification appliances. These devices offer precision synchronization of strobes to UL 1971 standards. For Genesis devices, enabling this feature allows connected horns to be silenced while strobes on the same two-wire circuit continue to flash until the panel is reset.

Clear-cut remote annunciation

Remote annunciation is a strong suit of the iO500. Up to eight annunciators can be installed on a single system. Compatible annunciators include a range of LED and LCD models that provide zone or point annunciation, as well as common control capabilities.

The iO500 also supports graphic annunciation with optional RA Graphic Annunicator interface modules. Each interface provides common control, indicators, and 32 LEDS. Consult the Ordering Information section for details.

A complete line of accessories

The iO500 life safety system is supported by a complete line of intelligent detectors, modules and related equipment. Consult the Ordering Information section for details.

Operation

The front panel provides an easy-to-use operator's interface, as well as all the necessary controls for front panel programming. A large back-lit 80-character LCD displays system status, event details, and programming prompts. Large tactile control buttons are easy to see in low light conditions, and bright multi-color LEDs offer at-a-glance status indication.

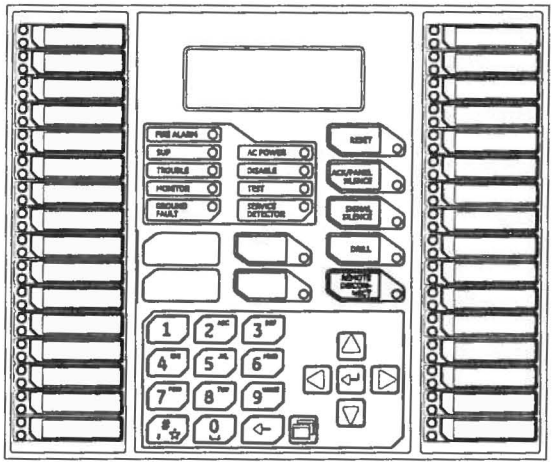

Control buttons

Button	Description
Reset	Initiates a system reset.
ACK/Panel Silence	Silences the panel and remote annunciators during an active trouble, supervisory, or alarm event and acknowledges new event activations.
Signal Silence	*Alarm mode:* Silences active notification appliances. Pressing Signal Silence a second time turns NACs back on.
Drill	Initiates a drill confirmation. Pressing drill a second time turns off the drill function.
Remote Disconnect	*Dialer:* Disables or enables dialer. *Dialer set to modem only:* Disables or enables the common alarm relay.
Left arrow	*Display mode:* Moves the cursor to the left. *Menu mode:* Toggles between programming selections.
Right arrow	*Display mode:* Moves the cursor to the right. *Menu mode:* Retrieves a programming option's sub menu and toggles between a programming option's selections.
Up arrow	*Display mode:* Advances to the previous event. *Menu mode:* Moves the cursor up.
Down arrow	*Display mode:* Advances to the next event. *Menu mode:* Moves the cursor down.
Enter	*Display mode:* Displays selected event details. *Menu mode:* Retrieves a programming option's sub menu or jumps to the *Save* function in the menu. *Entry mode:* Enters the selected data into the system.
Cancel	*Display mode:* Exits the detailed information display. *Menu mode:* Exits the current menu level. *Entry mode:* Clears the current entry.
Menu	Display mode: Enters the menu mode Menu mode: Exits menu mode
Space	Enters a space, such as a space between words.
Alphanumeric keypad	*Entry mode:* Pressing a button once enters the number on the button. Pressing the button twice enters the secondary value.
Programmable buttons	These buttons can be programmed to control or operate a device, zone, or Panel NAC. The buttons can be labeled with a slip-in insert.

2014903431

System LEDs

LED	Description
Fire Alarm	Red LED. On steady when there is an active alarm.
Trouble	Yellow LED. Flashes when there is a fault on a monitored circuit or system component, or when a circuit is disabled.
Supv	Yellow LED. On steady when there is an active supervisory event.
AC Power	Green LED. On when the panel has AC power.
Disable	Yellow LED. Double-flashes when there is a disabled circuit, alarm relay, or remote annunciator.
Ground Fault	Yellow LED. On steady during an active ground fault.
Test	Yellow LED. Flashes when performing an audible walk test. Steady indicates a silent test.
Monitor	Yellow LED. On steady when there is an active monitor event.
Service Detector	Yellow LED. Indicates that detector needs servicing.
Signal Silence	Yellow LED. On steady indicates thot NAC circuits are turned off but the panel is still in alarm.
Remote Disconnect	Yellow LED. On steady indicates that the dialer is disabled or that the alarm relay is enabled or disabled when the dialer is set to modem only.
Drill	Yellow LED. Indicates that the panel is in drill.
Reset	Yellow LED. Indicates that the panel is resetting.
Panel Silence	Yellow LED. Indicates that the panel has been silenced during an active trouble, supervisory, or alarm event and indicates that new event activations have been acknowledged.
User keys	Yellow LED. Programmable.

Panel Operation Options

Language	English or French
Marketplace	U.S. or Canada
AC fail delay	*Off:* Off-premise notification of an AC power failure is immediate. *1 to 15 hours:* Delays the off-premise notification of an AC power failure by the time period selected.
Zone resound	*On:* NACs resound each time a device in the zone goes into alarm even if they were silenced Off: Inhibits the NACs from turning on again (after they were silenced) when a second device in the zone goes into alarm.
Reset inhibit after NACs turn on	*Off:* Panel reset is operational immediately. *1 minute:* Panel reset is inhibited for one minute.
Auto signal silence	*Off:* Allows immediate silencing of signals from an off-normal condition using the Signal Silence button *5 to 30 minutes:* Delays the silencing of signals from an off-normal condition by disabling the Signal Silence button for the time period selected.
Day start	Start time for daytime sensitivity
Night start	Start time for nighttime sensitivity
Date	*U.S.:* MM/DD/YYYY *Canada:* DD/MM/YYYY
Mapping	*Disabled:* Device mapping is not available *Enabled:* Device mapping is available
LCD banner	Banner text for line one and line two. Each line is capable of up to 20 characters.
Event notification	*Zone:* When a device is a member of a zone, only the zone information is sent to the LCD display, LEDs, printer, and dialer. *Zone/device:* Zone information is sent to the LCD display and LEDs. Device information is sent to the printer and dialer. *Device:* Only device information is reported.

Programming

iO500 life safety systems are simple to set up, yet olso offer advanced programming features that put these small building panels into a class of their own. The auto programming feature quickly gets the panel operational using factory default settings. Basic zone and point settings can be programmed easily through the front panel interface, so the system is up and running in no time.

For more advanced system configuration and correlation groups programming, iO500 systems interface to a PC running compatible iO-CU software. This option offers full system configuration in the familiar Windows® operating environment. Connection is typically made to a laptop through the panel's optional RS-232 communications port, which can also be used to connect a system printer.

Among the many innovative features of iO500 control panels is the optional network card. This module provides a standard 10/100 Base T Ethernet® network connection that permits access to the control panel from any remote location with the correct communications protocols. The connection can be used to download to the panel from the iO-CU, or upload and view system reports using the iO-CU.

Available system reports include:

- Correlation groups
- Device maintenance
- Internal status
- System status
- Dialer
- Device details
- History
- System configuration
- Walk test

Dimensions

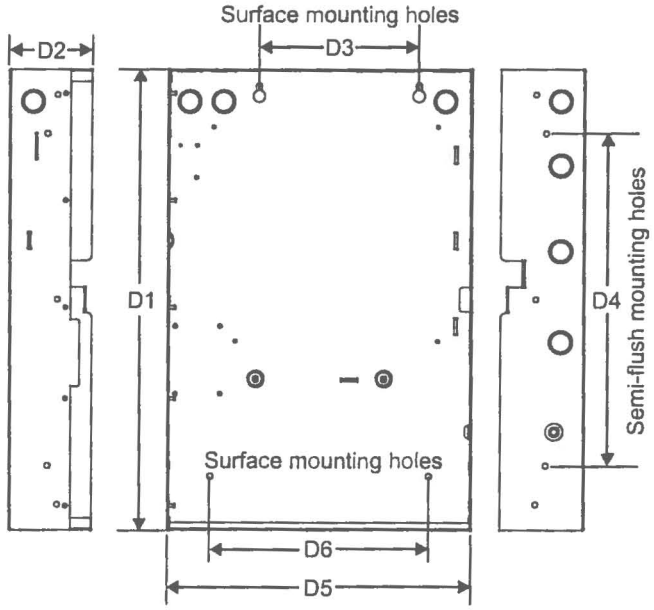

Panel dimensions, in (cm)

Model	D1*	D2	D3	D4	D5*	D6
iO500	28.0 (71.1)	3.85 (9.8)	9.0 (22.8)	22.0 (55.8)	15.75 (40.0)	10.25 (26.0)

** Add 1-1/2 in. (3.81 cm) to D1 and D5 dimensions for trim kit.*

2014903431

Wiring & Configuration

Notification appliance circuits (TB2)

iO500 control panels come equipped with four notification appliance circuits. Each circuit can be individually configured for continuous, temporal, synchronized, and coded output.

Circuit specifications	
Circuit Type	4 Class B or 2 Class A, 2.5 amps each
Voltage	24 VFWR
Current	6.0 A total, 2.5 A max. per circuit at 120/230 VAC 60 Hz 5.0 A total at 230VAC 50 Hz, 2.5 A max. per circuit
Impedance	26 Ω total, 0.35 µF max
EOLR	15 K Ω, ½ W

Class B wiring

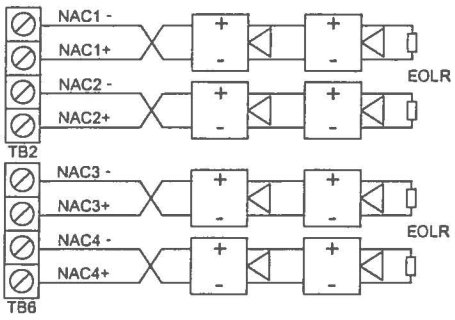

Class A wiring

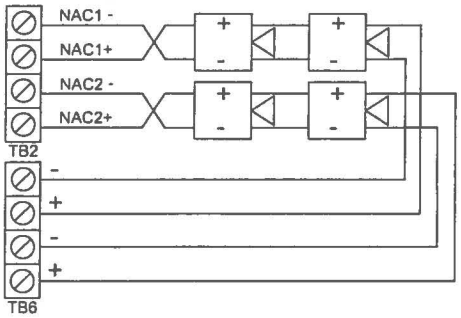

Marking indicates output signal polarity when the circuit is active. Polarity reverses when the circuit is not active. Wire notification appliances accordingly. Notification appliance polarity shown in active state.

Auxiliary & Smoke power outputs (TB3)

The control panel provides two auxiliary power outputs which can be used for powering ancillary equipment such as remote annunciators and two wire smoke detectors. Aux 2 can be software selected to operate continuous. The circuit is supervised for shorts and grounds.

Note: For a complete list of devices that can be connected to this circuit, refer to the iO Series compatibility list (p/n 3101064).

Circuit specifications	
Circuit voltage range	21.9 to 28.3 V
Resettable circuit (Aux power 2)	24 VDC nominal at 500 mA
Continuous circuit (Aux power 1)	24 VDC nominal at 500 mA. Use this circuit for powering two-wire smoke detectors.

Note: Any current above 0.5 amp connected to both Aux 1 and 2 will reduce the total available NAC power by that amount.

Signature Device loop

The system provides one device loop circuit that can be used with any mix of Signature Series detectors and modules. The loop circuit is supervised for opens, shorts, and grounds.

Circuit specifications	
Device loops	1 loop, expandable to 2, Class A or B, each loop supporting up to 250 device addresses
Communication line voltage	Maximum 20 V peek-to-peek
Circuit current	0.5 A max
Circuit impedance	66Ω total, 0.5 µF, max
Isolators	64 maximum

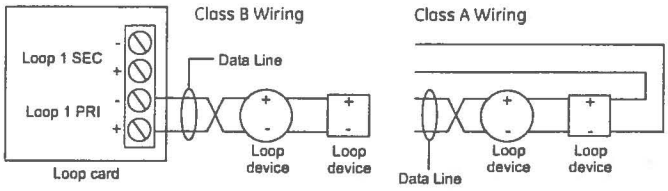

Annunciator loop (TB4)

The control panel provides a connection for up to eight serially driven and supervised remote annunciators.

Circuit specifications	
Device loops	Class B (Style Y) or Class A (Style Z)
Circuit voltage	2.55 V
Circuit current	30 mA max
Circuit impedance	Up to 8 annunciators or 4000 feet

Class B

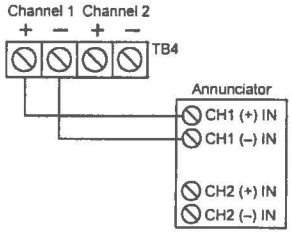

Class A

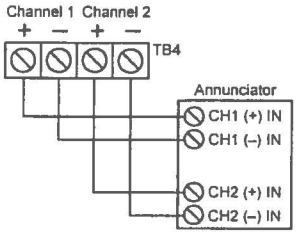

Alarm, trouble, and supervisory relay (TB3)

The trouble relay is normally-open, held closed, and opens on any trouble event or when the panel is de-energized. The supervisory relay is normally-open, and closes on any supervisory event. The alarm relay changes over on any alarm event.

Relay specifications

	Alarm	Trouble	Supervisory
Type	Form C		Form A
Voltage	24 VDC at 1 A resistive	24 VDC at 1 A resistive	

Relay circuits can only be connected to power-limited sources.

2014903431

Option Cards

iO500 panels are supported by a complete line of modules and reloted equipment that enhance performance and extend system capabilities. Option cards plug directly into the control panel main circuit board or are connected to it with a ribbon cable. After installation, terminals remain accessible. The cabinet provides ample room for wire routing, keeping wiring neat at all times.

SA-ETH Ethernet Interface Card

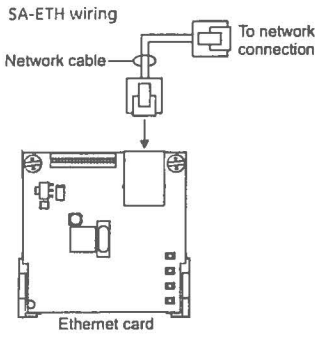

The SA-ETH card provides a standard 10/100 Base T Ethernet network connection for connecting to an intranet, a local network, or the Internet. The card can be used to download configuration programming from the iO-CU to the panel over the network.

The Ethernet card is installed on the plastic assembly and connects to the main circuit board via a ribbon cable.

SA-ETH specifications	
Ethernet	10/100 Base T
Operating environment	
Temperature	32 to 120°F (0 to 49°C)
Humidity	0 to 93% RH, noncondensing at 90°F (32°C)

SMK Smoke Power Converter

The SMK Smoke Power Converter Module provides a backup power source for two-wire smoke circuits connected to a Signature data circuit. The SMK monitors the operating power from the power supply. When power begins to degrade, the SMK provides the necessary operating voltage to the two-wire smoke detection circuits.

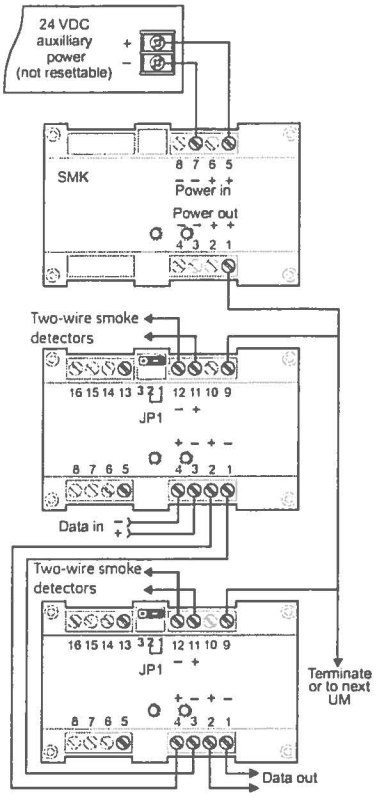

SMK specifications	
Input voltage	21.9 to 28.3 VDC (not resettable)
Output voltage	24 VDC nom. at 200 mA, max., special applications
Ground fault impedance	10 k ohm
Operating environment	
Temperature	32 to 120°F (0 to 49°C)
Humidity	0 to 93% RH, noncondensing at 90°F (32°C)
Storage temperature	-4 to 140°F (-20 to 60°C)
Compatible electrical boxes	North American 4 inch square x 2-1/2 in. (64 mm) deep 2 gang box or Standard 4 in. square box 1-1/2 in. (38 mm) deep
Wire size	14, 16, or 18 AWG wire (1.5, 1.0, or 0.75 sq. mm) (Sizes 16 and 18 AWG are preferred)

XAL250 Loop Expander Card

The XAL250 Loop Expander Card provides an additional Signature Series device loop on the control panel. The card expands the control panel's device capacity to 500 total device addresses, 250 per loop. The card is compatible with Class B or Class A wiring. It is compatible with iO500 control panels only.

The loop exponder card connects to connector J7 on the main circuit board.

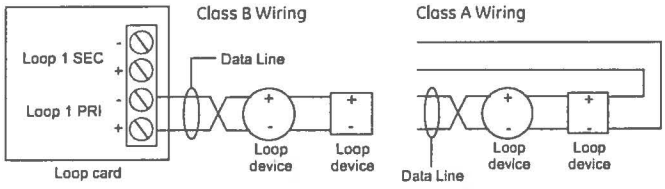

XAL250 specifications	
Device addresses on loop	125 detectors and 125 modules
Wiring	Class B (Style Y) or Class A (Style Z)
Operating voltage	20 V peak-to-peak
Operating current	0.5 mA total
Circuit impedance	66 Ω, 0.5 µF, max
Terminal rating	12 to 18 AWG (0.75 to 2.5 sq mm)
Operating environment	
Temperature	32 to 120°F (0 to 49°C)
Humidity	0 to 93% RH, noncondensing at 90°F (32°C)

2014903431

SA-DACT Dialer

The SA-DACT provides communications between the control panel and the central station over a telephone line system. It transmits system status changes (events) to a compatible digital alarm communicator receiver over the public switched telephone network. The dialer is capable of single, dual, or split reporting of events to two different account and telephone numbers. The modem feature of the SA-DACT can also be used for uploading and downloading panel configuration, history, and current status to a PC running the iO-CU.

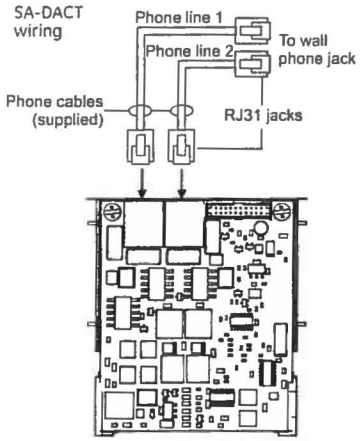

The dialer phone lines connect to connectors on the dialer's main circuit board. Phone line 1 connects to connector J4 and phone line 2 connects to connector J1.

The SA-DACT queues messages and transmits them based on priority (alarm, supervisory, trouble, and monitor). Activations are transmitted before restorations.

The SA-DACT is installed on the plastic assembly and connects to the main circuit board via a ribbon cable.

SA-DACT specifications	
Phone line type	One or two loop-start lines on a public, switched network
Phone line connector	RJ-31/38X (C31/38X)
Communication formats	Contact ID (SIA DC-05)
Operating environment	
Temperature	32 to 120°F (0 to 49°C)
Humidity	0 to 93% RH, noncondensing at 90°F (32°C)

Compatible DACRs		
Receiver	**Models**	**Formats**
Ademco	685	Contact ID
FBII	CP220	Contact ID
Osborne-Hoffman	OH 2000	Contact ID
Radionics	D6600	Contact ID
Silent Knight	9800	Contact ID
Sur-Gard	SG-MLR1, MLR2	Contact ID

SA-232 RS-232 interface

The SA-232 card provides an RS-232 interface with iO500 panels. It can be used for connecting a printer to the control panel to print system events. The card also can be used for connecting a computer to download a configuration program from the iO-CU to the control panel.

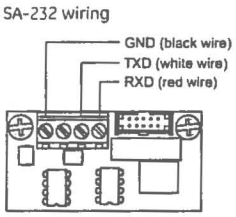

The RS-232 card is installed on the plastic assembly and connects to the main circuit board via a ribbon cable.

SA-232 specifications	
Operating voltage	Standard EIA-232
Terminal rating	12 to18 AWG (0.75 to 2.5 sq mm)
Operating environment	
Temperature	32 to 120°F (0 to 49°C)
Humidity	0 to 93% RH, noncondensing at 90°F (32°C)

Specifications

Device loops	1 loop, expandable to 2, Class A or B, each loop supporting up to 250 device addresses
NAC circuits	4 Class B or 2 Class A, 2.5 amps each
Power supply	6.0 A total, 2.5 A max. per circuit at 120/230 VAC 60 Hz 5.0 A total at 230VAC 50 Hz, 2.5 A max. per circuit 0.5 amps aux power
NAC Operating voltage	24 VDC. NAC minimum voltage: 19.5 VDC @ 20.4 V battery voltage
Loop circuit operating voltage	20 V peak-to-peak
SLC Primary power	120 VAC, 60 Hz, 230 VAC 50-60 Hz
Aux Power 1 (Continuous circuit)	24 VDC nominal at 500 mA. A SMK module is required when using the SIGA-UM module to support two-wire smoke detectors.
Aux Power 2 (Resettable circuit)	24 VDC nominal at 500 mA
Auxiliary output	19 to 25.7 VDC
Base panel current draw	Standby: 172 mA Alarm: 267 mA
Battery placement	iO500 cabinets accommodate up to 18 A/H batteries. Use a external cabinet for larger battery sizes.

Batteries	Batteries must be sealed lead acid type only. Maximum charging capacity = 26 Ah.
Loop circuit	Maximum loop resistance: 66 Ω. Maximum loop capacitance: 0.5 µF. Style 4, 6, and 7 wiring. 64 isolators maximum.
SIGA-UM/SIGA-MAB	1.5 mA (see the UL and ULC compatibility list for for the maximum quantity of detectors per circuit)
Compatibility ID	100
Alarm contact	Form C 24 VDC @ 1 A (resistive load)
Trouble contact	Form C 24 VDC @ 1 A (resistive load)
Supervisory contact	Form A 24 VDC @ 1 A (resistive load)
Environmental	Temperature: 0 to 49°C (32 to 120°F). Humidity: 0 to 93% RH, noncondensing
Terminal rating	All terminals rated for 12 to 18 AWG (0.75 to 2.5 mm²)
Serial communications	Voltage: 2.55 V. Current: 30 mA max
Remote annunciator	8 drops max, RS-485 Class A or B
Input zones	32 max.
Agency Listing	UL, CSFM and ULC

2014903431

Ordering Information

Part	Description
iO500 Intelligent Multi-Loop Systems	
iO500G	1 Loop System, 500 analog point capacity, 4 NACs, gray door, surface mount enclosure, 115VAC transformer, English.
iO500G-2	1 Loop System, 500 analog point capacity, 4 NACs, gray door, surface mount enclosure, 230VAC transformer, English
iO500GC	1 Loop System, 500 analog point capacity, 4 NACs, gray door, surface mount enclosure, 230VAC transformer, Canadian English
iO500G-F	1 Loop System, 500 analog point capacity, 4 NACs, gray door, surface mount enclosure, 230VAC transformer, Canadian French
iO500GD	1 Loop System, 500 analog point capacity, two-line dialer, 4 NACs, Gray door, surface mount enclosure, 115VAC transformer, English.
iO500R	1 Loop System, 500 analog point capacity, 4 NACs, red Door, surface mount enclosure, 115VAC transformer, English.
iO500R-2	1 Loop System, 500 analog point capacity, 4 NACs, red door, surface mount enclosure, 230VAC transformer, English
iO500RD	1 Loop System, 500 analog point capacity, two-line dialer, 4 NACs, Red Door, surface mount enclosure, 115VAC transformer, English.
SA-TRIM2	Flush mount trim, black
Option Cards (refer to Data Sheet 85005-00129)	
SA-DACT	Dual Line Dialer/Modem, supports Contact ID, mounts in cabinet on base plate.
SA-232	Serial Port (RS-232), for connection to printers & computers, mounts in cabinet to base plate
SA-ETH	Ethernet Port, Slave, mounts in cabinet on base plate.
XAL250	Signature Loop Expansion Module. Adds second loop to iO500 systems, 250 point capacity. Mounts in cabinet on main board.
D16L-iO-2	LED Annunciator Module, 16 groups, 2 LEDs per group with insertable labeling. Mounts in cabinet on iO500 systems. Mounts to right of display.
D16L-iO-1	LED Annunciator Module, 16 groups, 2 LEDs per group with insertable labeling. Mounts in cabinet on iO500 systems. Mounts to left of display.
Remote Annunciators (refer to Data Sheet 85005-0128)	
LCD Remote Annunciators	
RLCD	Remote Annunciator, 4X20 LCD & Common Indictors for displaying system status, mounts 4" Square electrical box, gray housing.
RLCD-R	Remote Annunciator, 4X20 LCD & Common Indictors for displaying system status, mounts 4" Square electrical box, red housing.
RLCD-C	Remote Annunciator, 4X20 LCD, Common Indictors & Common Controls for displaying system status, mounts 4" Square electrical box, gray housing.
RLCD-CR	Remote Annunciator, 4X20 LCD, Common Indictors & Common Controls for displaying system status, mounts 4" Square electrical box, red housing.
LED Remote Annunciators & Expander	
RLED-C	Remote Annunciator, Common Indictors for displaying system status, common controls & 16 groups w/2 LEDs each for zone display, mounts to standard 4" Square electrical box, gray housing.
RLED-CR	Remote Annunciator, Common Indictors for displaying system status, common controls & 16 groups w/2 LEDs each for zone display, mounts to standard 4" Square electrical box, red housing.
RLED24	Remote Annunciator Zone expander, 24 groups of 2 LEDS each for display of alarm and trouble. Each with custom label area. Mounts to standard 4" electrical box, gray housing.
RLED24R	Remote Annunciator Zone expander, 24 groups of 2 LEDS each for display of alarm and trouble. Each with custom label area. Mounts to standard 4" electrical box, red housing.
Graphic Annunciator Drivers	
GCI	Graphic Annunciator Driver, provides outputs for common indicators and 32 alarm/supv zones as well as inputs for common switches. Provided with a snap track for mounting in custom graphic enclosures.
Remote Annunciator Cabinets & Accessories	
RA-ENC1	Remote Annunciator Enclosure, key locked with plexiglass window for one RLCD(C) or RLED(C).
RA-ENC2	Remote Annunciator Enclosure, key locked with plexiglass window with space for 2 of either RLCDx, RLEDx or RLED24.
RA-ENC3	Remote Annunciator Enclosure, key locked with plexiglass window with space for 3 of either RLCDx, RLEDx or RLED25.
RKEY	Keyswitch, single gang, provides key operated enable or disable of common controls on RLCD or RLED units.
LSRA-SB	Surface Mount Box - for R-Series.
Programming Tools	
iO-CU	EST Series configuration and diagnostics utility.

Continued...

2014903431

GE
Security

U.S.
T 888-244-9979
F 866-503-3996

Canada
T 519 376 2430
F 519 376 7258

Asia
T 852 2907 8108
F 852 2142 5063

Australia
T 61 3 9259 4700
F 61 3 9259 4799

Europe
T 32 2 725 11 20
F 32 2 721 86 13

Latin America
T 305 593 4301
F 305 593 4300

www.gesecurity.com/est

Windows is a registered trademark of Microsoft Corporation.
Ethernet is a registered trademark of Xerox.

© 2008 General Electric Company
All Rights Reserved

Intelligent Analog Addressable Devices & Accessories

Part #	Description	Ship wt.
Intelligent Detectors & Bases		
SIGA-HFS	Intelligent Fixed Temperature Heat Detector	0.5 (0.23)
SIGA-HRS	Intelligent Fixed Temperature/Rate-of-Rise Heat Detector	
SIGA-IPHS	Intelligent 4D Multisensor Detector	
SIGA-IPHSB	Intelligent 4D Multisensor Detector (Black)	
SIGA-PHS	Intelligent 3D Multisensor Detector	
SIGA-PS	Intelligent Photoelectric Detector	
SIGA-IS	Intelligent Ionization Detector	
SIGA-SD	Intelligent Duct Detector	
SIGA-SB	Detector Mounting Base	0.2 (0.09)
SIGA-SB4	4-inch Detector Mounting Base c/w SIGA-TS Trim Skirt	
SIGA-RB	Detector Mounting Base w/Relay	
SIGA-RB4	4-inch Detector Mounting Base /w Relay c/w SIGA-TS Trim Skirt	
SIGA-IB	Detector Mounting Base w/Fault Isolator	
SIGA-IB4	4-inch Detector Mounting Base w/ Fault Isolator c/w SIGA-TS Trim Skirt	
SIGA-LED	Remote Alarm LED	
SIGA-AB4G	Audible (Sounder) Base	0.3 (0.15)
SIGA-TS4	Trim Skirt (supplied with 4-inch bases)	0.1 (.04)
Modules		
SIGA-CC1	Single Input Signal Module (Standard Mount)	0.5 (0.23)
SIGA-MCC1	Single Input Signal Module (UIO Mount)	0.18 (0.08)
SIGA-CC1S	Synchronization Output Module (Standard Mount)	0.5 (0.23)
SIGA-MCC1S	Synchronization Output Module (UIO Mount)	0.18 (0.08)
SIGA-CC2	Dual Input Signal Module (Standard Mount)	0.5 (0.23)
SIGA-MCC2	Dual Input Signal Module (UIO Mount)	0.18 (0.08)
SIGA-CR	Control Relay Module (Standard Mount)	0.4 (0.15)
SIGA-MCR	Control Relay Module (UIO Mount)	0.18 (0.08)
SIGA-CRR	Polarity Reversal Relay Module (Standard Mount)	0.4 (0.15)
SIGA-MCRR	Polarity Reversal Relay Module (UIO Mount)	0.18 (0.08)
SIGA-RM1	Riser Monitor Module (Standard Mount)	0.5 (0.23)
SIGA-MRM1	Riser Monitor Module (Plug-in)	0.18 (0.08)
SIGA-IO	Input/Output Module (Standard Mount)	0.34 (0.15)
SIGA-MIO	Input/Output Module (Plug-in)	0.22 (0.10)
SIGA-MAB	Universal Class A/B Module (Plug-in)	0.18 (0.08)
SIGA-CT1	Single Input Module	0.4 (0.15)
SIGA-CT2	Dual Input Module	0.4 (0.15)
SIGA-MCT2	Dual Input Plug-in (UIO) Module	0.1 (0.05)
SIGA-IM	Fault Isolator Module	0.5 (0.23)
SIGA-MM1	Monitor Module	0.4 (.15)
SIGA-WTM	Waterflow/Tamper Module	0.4 (.15)
SMK	Smoke Power Converter Module	0.4 (0.15)
SIGA-UIO2R	Universal Module Board w/Riser Inputs - Two Module Positions	0.32 (0.15)
SIGA-UIO6R	Universal Module Board w/Riser Inputs - Six Module Positions	0.62 (0.28)
SIGA-UIO6	Universal Module Board - Six Module Positions	0.56 (0.25)
Accessories		
CTM	City Tie Module. Provides connection to a local energy fire alarm box.	0.6 (0.3)
BC-1	Battery Cabinet. 14.0" x 18.25" x 7.25". Holds up to 2 12V24A batteries.	50.0 (22.7)
BC-1R	Battery Cabinet - Red. 14.0" x 18.25" x 7.25". Holds up to 2 12V24A batteries.	50.0 (22.7)
IOP3A	Isolator Module - RS232. For use with short haul modems.	1.61 (0.7)
RPM	Reverse Polarity Module	3.0 (1.36)
MFC-A	Multifunction Fire Cabinet, 8" x 14" x 3.5" - RED.	20.6 (9.4)
PT-1S	System Printer - Desktop style.	36.6 (16.6)

imagination at work

GE
Security

EST Fire & Life Safety
Accessories

2014903431

Overview

The PAM-1 Relay is encapsulated multi-voltage device providing 10 Amp Form C contacts. The relay may be energized by one of three input voltages: 24 Vac, 24 Vdc, or 115 Vac.

A red LED is provided which, when illuminated, indicates the relay coil is energized.

The PAM-1 may be mounted by using the double-sided adhesive tape, the self-drilling screw, or loosely placed in a back box.

The PAM-1 is ideal for applications where remote relays are required for control or status feedback. They are suitable for use with HVAC, Temperature Control, Fire Alarm, Security, Energy Management, and Lighting Control Systems.

Standard Features

- Completely encapsulated 10 Amp relay
- Relay may be energized by one of three input voltages
- Contains a red LED which illuminates when relay coil is energized
- May be mounted by double-sided adhesive tape, self-drilling screw or placed in back box
- Convenient 6 in (150mm) wire leads for electrical connections

Wiring

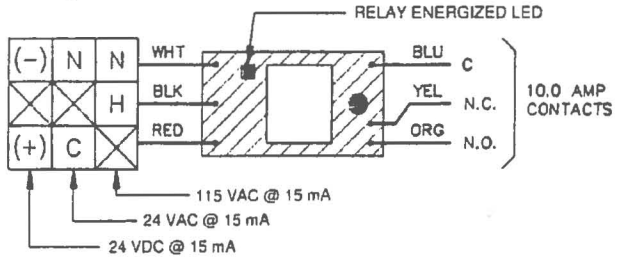

Multi-Voltage Control Relay

Model PAM-1

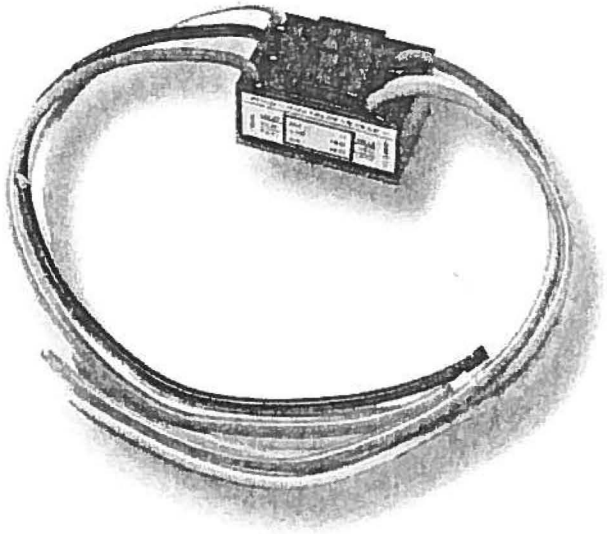

GE
Security

2014903431

U.S.
T 888-378-2329
F 866-503-3996

Canada
T 519 376 2430
F 519 376 7258

Asia
T 852 2907 8108
F 852 2142 5063

Australia
T 61 3 9259 4700
F 61 3 9259 4799

Europe
T 32 2 725 11 20
F 32 2 721 86 13

Latin America
T 305 593 4301
F 305 593 4300

www.gesecurity.com

© 2006 General Electric Company
All Rights Reserved

Specifications

Power Requirments	15 mA per position @ 24 Vdc, 24 Vac, 115 Vac
Relay	UL Recognized SPDT
Contact Rating	10 Amps @ 115 Vac
Ambient Temperature	-58°F to 185°F (-50°C to 85°C)
Approvals	UL Recognized components
Dimensions	1.5 H x 1 W .875 D inches (38.1 x 24.5 x 22.2 mm) with 6 inch (150mm) wire leads 18 AWG (1.00mm²)

Ordering Information

Model	Description
PAM-1	Single SPDT relay with LED double-sided adhesive tape, mounting screw and 6 in (150 mm) leads.

imagination at work

Overview

The SIGA-270 and SIGA-278 series Manual Pull Stations are part of GE Security's Signature Series system. The SIGA-270 Fire Alarm Manual Pull Stations feature our very familiar teardrop shape. They are made from die-cast zinc and finished with red epoxy powder-coat paint complemented by aluminum colored stripes and morkings. With positive pull-lever operation, one pull on the station handle breaks the glass rod and turns in a positive alarm, ensuring protection plus fool-proof operation. Presignal models (SIGA-270P) are equipped with a general alarm (GA) keyswitch for applications where two stage operation is required. The up-front highly visible glass rod discourages tampering, but is not required for proper operation.

GE Security's double action single stage SIGA-278 station is a contemporary style manual station made from durable red colored lexan. To initiate an alarm, first lift the upper door marked "LIFT THEN PULL HANDLE", then pull the alarm handle.

Standard Features

Note: *Some features described here may not be supported by all control systems. Check your control panel's Installation and Operation Guide for details.*

- **Traditional familiar appearance**
  SIGA-270 models feature our familiar teardrop design with simple positive pull action and sturdy die-cast metal body.
- **One stage (GA), two stage (pre-signal), and double action models**
  SIGA-270 models are available for one or two stage alarm systems. The single stage double action SIGA-278 features a rugged Lexan housing with keyed reset mechanism.
- **Break glass operation**
  An up-front visible glass rod on the SIGA-270 discourages tampering.
- **Intelligent device with integral microprocessor**
  All decisions are made at the station allowing lower communication speed while substantially improving control panel response time. Less sensitive to line noise and loop wiring properties; twisted or shielded wire is not required.
- **ADA Compliant**
  Meets ADA requirements for manual pull stations.
- **Electronic Addressing with Non-volatile memory**
  Permanently stores programmable address, serial number, type of device, and job number. Automatically updates historic information including hours of operation, last maintenance date, number of alarms and troubles, and time and date of last alarm.
- **Automatic device mapping**
  Each station transmits wiring information to the loop controller regarding its location with respect to other devices on the circuit.
- **Stand-alone operation**
  The station inputs an alarm even if the loop controller's polling interrogation stops.
- **Diagnostic LEDs**
  Status LEDs; flashing GREEN shows normal polling; flashing RED shows alarm stote.
- **Designed for high ambient temperature operation**
  Install in ambient temperatures up to 120 °F (49 °C).

Manual Pull Stations

SIGA-270, SIGA-270P, SIGA-278

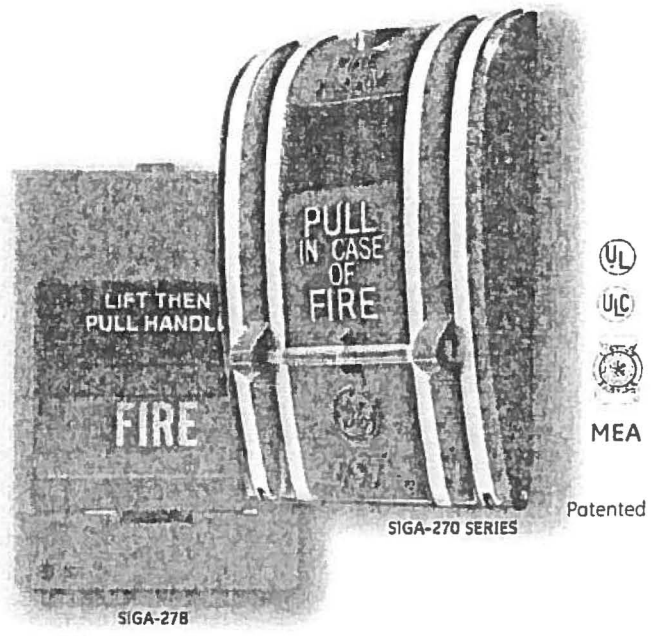

MEA

Patented

2014903431

Application

The operating characteristics of the fire alarm stations are determined by their sub-type code or "Personality Code". NORMALLY-OPEN ALARM - LATCHING (Pesonality Code 1) is assigned by the factory; no user configuration is required. The device is configured for Class B IDC operation. An ALARM signal is sent to the loop controller when the station's pull lever is operated. The alarm condition is latched at the station.

Compatibility

Signature Series manual stations are compatible only with GE Security's Signature Loop Controller.

Warnings & Cautions

This device will not operate without electrical power. As fires frequently cause power interruption, we suggest you discuss further safeguards with your local fire protection specialist.

Testing & Maintenance

To test (or reset) the station simply open the station and operate the exposed switch. The SIGA-270 series are opened with a tool; the SIGA-278 requires the key which is supplied with that station.

The station's automatic self-diagnosis identifies when it is defective and causes a trouble message. The user-friendly maintenance program shows the current state of each Signature series device and other pertinent messages. Single devices may be deactivated temporarily, from the control panel. Availability of maintenance features is dependent on the fire alarm system used.

Scheduled maintenance (Regular or Selected) for proper system operation should be planned to meet the requirements of the Authority Having Jurisdiction (AHJ). Refer to current NFPA 72 and ULC CAN/ULC 536 standards.

Typical Wiring

The fire alorm station's terminal block accepts #18 AWG (0.75mm²) to #12 AWG (2.5mm²) wire sizes. See Signature Loop Controller catalog sheet for detailed wiring requirement specifications.

Wiring Notes

1. Refer to Signature Loop Controller manual for maximum wire distance.
2. All wiring is power limited and supervised.

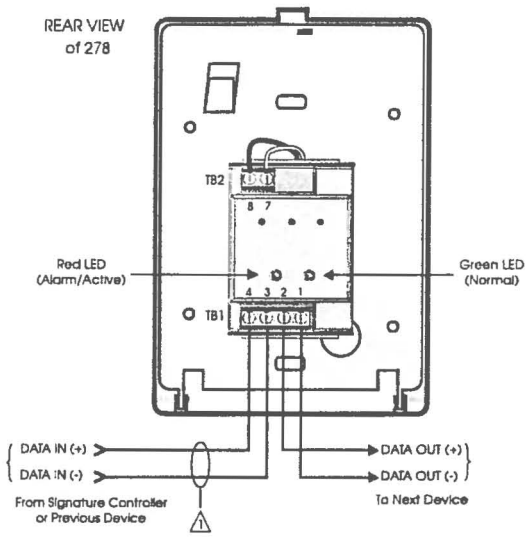

Figure 4. Single Stage Systems

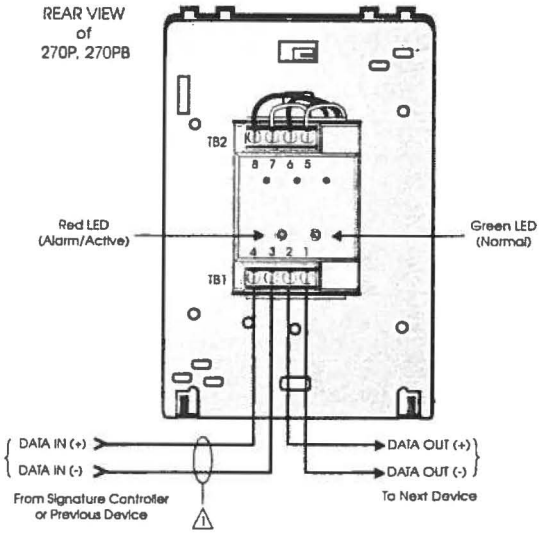

Figure 5. Two Stage Systems

2014903431

Installation

Single-stage Signature Series fire alarm manual pull stations mount to North American 2½ inch (64 mm) deep 1-gang boxes.

Two stage presignal (270P) models require 1½ inch (38 mm) deep 4-inch square boxes with 1-gang, ½-inch raised covers. Openings must be angular. *Rounded openings are not acceptable.* Recommended box: Steel City Model 52-C-13; in Canada, use Iberville Model CI-52-C-49-1/2.

All models include terminals are suited for #12 to #18 AWG (2.5 mm² to 0.75 mm²) wire size. GE Security recommends that these fire alarm stations be installed according to latest recognized edition of national and local fire alarm codes.

Electronic Addressing: The loop controller electronically addresses each manual station, saving valuable time during system commissioning. Setting complicated switches or dials is not required. Each station has its own unique serial number stored in its on-board memory. The loop controller identifies each device on the loop and assigns a "soft" address to each serial number. If desired, the stations can be addressed using the SIGA-PRO Signature Program/Service Tool.

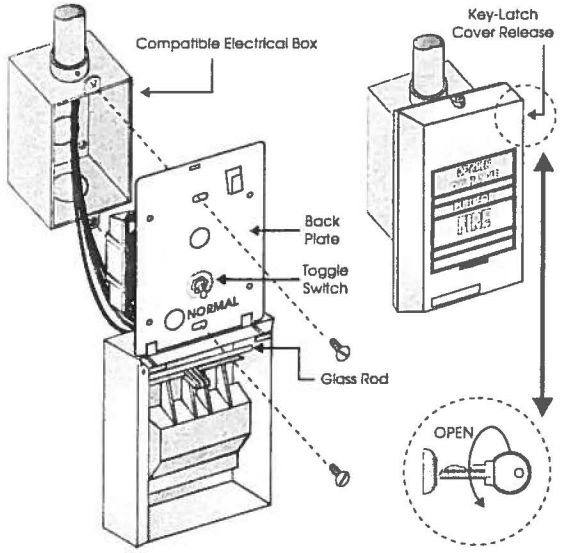

Figure 1. SIGA-278 installation

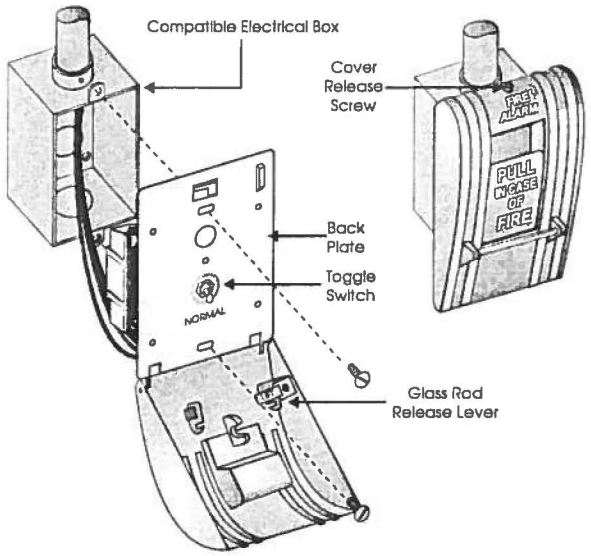

Figure 2. SIGA-270, SIGC-270F, SIGC-270B installation

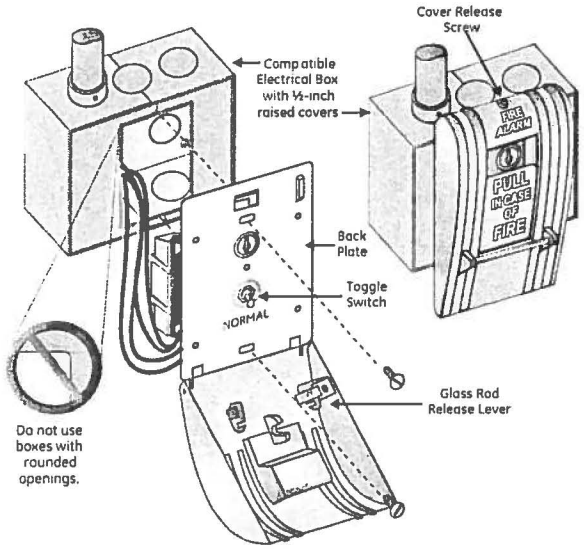

Figure 3. SIGA-270P, SIGC-270PB installation

GE
Security

2014903431

U.S.
T 888-378-2329
F 866-503-3996

Canada
T 519 376 2430
F 519 376 7258

Asia
T 852 2907 8108
F 852 2142 5063

Australia
T 61 3 9259 4700
F 61 3 9259 4799

Europe
T 32 2 725 11 20
F 32 2 721 86 13

Latin America
T 305 593 4301
F 305 593 4300

www.gesecurity.com/est

© 2007 General Electric Company
All Rights Reserved

Signature Series is a Trademark of GE Security.

Specifications

Catalog Number	SIGA-270, SIGC-270F, SIGC-270B	SIGA-270P, SIGC-270PB	SIGA-278
Description	Single Action - One Stage	Single Action -Two Stage (Presignal)	Double Action - One Stage
Addressing Requirements	Uses 1 Module Address	Uses 2 Module Addresses	Uses 1 Module Address
Operating Current	Standby = 250µA Activated = 400µA	Standby = 396µA Activated = 680µA	Standby = 250µA Activated = 400µA
Construction & Finish	Diecast Zinc - Red Epoxy with aluminum markings		Lexan - Red with white markings
Type Code	Factory Set		
Operating Voltage	15.2 to 19.95 Vdc (19 Vdc nominal)		
Storage and Operating Environment	Operating Temperature: 32°F to 120°F (0°C to 49°C) Storage Temperature: -4°F to 140°F (-20°C to 60°C) Humidity: 0 to 93% RH		
LED Operation	On-board Green LED - Flashes when polled On-board Red LED - Flashes w hen in alarm Both LEDs - Glow steady when in alarm (stand-alone)		
Compatibility	Use With: Signature Loop Controller		
Agency Listings	UL, ULC (note 1), MEA, CSFM		

Note: *SIGC-270F, SIGC-270B and SIGC-270PB are ULC listed only. Suffix "F" indicates French markings. Suffix "B" indicates English/French biling ual markings.*

Ordering Information

Catalog Number	Description	Ship Wt. lbs (kg)
SIGA-270	One Stage Fire Alarm Station, English Markings - UL/ULC Listed	1 (0.5)
SIGC-270F	One Stage Fire Alarm Station, French Markings - ULC Listed	
SIGC-270B	One Stage Fire Alarm Station, French/English Markings - ULC Listed	
SIGA-270P	Two Stage (Presignal) Fire Alarm Station, English Markings - UL/ULC Listed	
SIGC-270PB	Two Stage (Presignal) Fire Alarm Station, French/English Markings - ULC Listed	
SIGA-278	Double Action (One Stage) Fire Alarm Station, English Markings - UL/ULC Listed	

Accessories		
32997	GA Key w/Tag - for pre-signal station (CANADA ONLY)	0.1 (.05)
276-K2	GA Key - for pre-signal station (USA ONLY)	
276-K1	Station Reset Key, Supplied with all Key Reset Stations	
27165	12 Glass Rods - for SIGA-270 series (CANADA ONLY)	
270-GLR	20 Glass Rods - for SIGA-270 series (USA ONLY)	
276-GLR	20 Glass Rods - for SIGA-278 series	
276B-RSB	Surface Mount Box, Red - for SIGA pull stations	1 (0.6)

imagination at work

2014903431

Overview

The Signature Series Model SIGA-PS Intelligent Photoelectric Smoke Detector gathers analog information from its smoke sensing element and converts it into digital signals. The detector's on-board microprocessor measures and analyzes these signals. It compares the information to historical readings and time patterns to make an alarm decision. Digital filters remove signal patterns that are not typical of fires. Unwanted alarms are virtually eliminated.

The microprocessor in each detector provides four additional benefits - Self-diagnostics and History Log, Automatic Device Mapping, Stand-alone Operation and Fast, Stable Communication.

Self-diagnostics and History Log - Each Signature Series detector constantly runs self-checks to provide important maintenance information. The results of the self-check are automatically updated and permanently stored in the detector's non-volatile memory

Automatic Device Mapping - The loop controller learns where each device's serial number address is installed relative to other devices on the circuit. The mapping feature provides supervision of each device's installed location to prevent a detector from being reinstalled (after cleaning etc.) in a different location from where it was originally.

Stand-alone Operation - A decentralized alarm decision by the detector is guaranteed. On-board intelligence permits the detector to operate in stand-alone mode. If loop controller CPU communications fail for more than four seconds, all devices on that circuit go into stand-alone mode. The circuit acts like a conventional alarm receiving circuit.

Fast Stable Communication - On-board intelligence means less information needs to be sent between the detector and the loop controller. Other than regular supervisory polling response, the detector only needs to communicate with the loop controller when it has something new to report.

Standard Features

- Integral microprocessor
- Non-volatile memory
- Automatic mapping device
- Electronic addressing
- Environmental compensation
- Intelligent detector
- Wide 0.67% to 3.77%/ft. sensitivity range
- Twenty pre-alarm sensitivity values, set in 5% increments
- Identification of dirty or defective detectors
- Automatic day/night sensitivity adjustment
- Twin RED/GREEN status LEDs
- Standard, relay, fault isolator, and audible mounting bases
- Designed and manufactured to ISO 9001 standards

Intelligent Photoelectric Smoke Detector

SIGA-PS

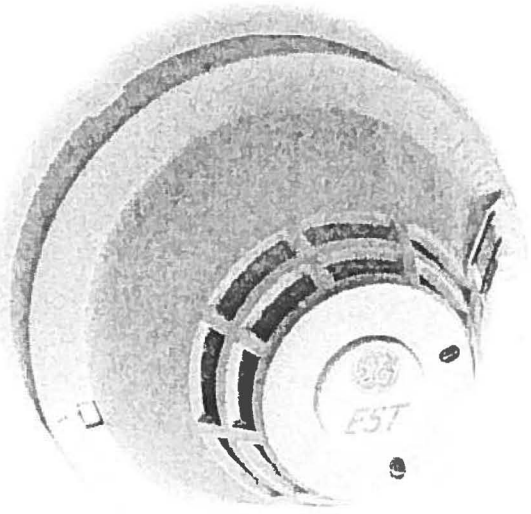

Application Notes Available

2014903431

Installation

Signature Series detectors mount to North American 1-gang boxes, 3-1/2 inch or 4 inch octagon boxes, and to 4 inch square electrical boxes 1-1/2 inches (38 mm) deep. They mount to European BESA and 1-gang boxes with 60.3 mm fixing centers.

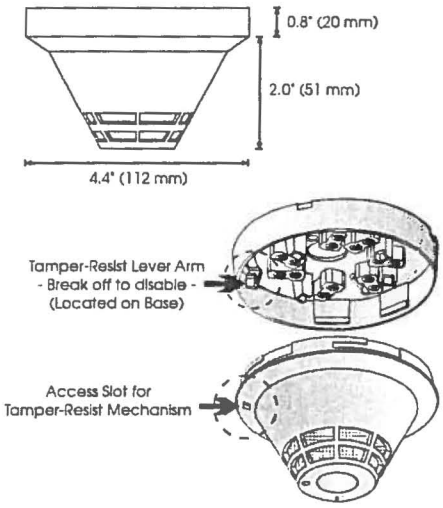

Testing & Maintenance

Each detector automatically identifies when it is dirty or defective and causes a "dirty detector" message. The detector's sensitivity measurement can also be transmitted to the loop controller. A sensitivity report can be printed to satisfy NFPA sensitivity measurements which must be conducted at the end of the first year and every two years thereafter.

The user-friendly maintenance program shows the current state of each detector and other pertinent messages. Single detectors may be turned off temporarily from the control panel. Availability of maintenance features is dependent on the fire alarm system used. Scheduled maintenance (Regular or Selected) for proper detector operation should be planned to meet the requirements of the Authority Having Jurisdiction (AHJ). Refer to current NFPA 72 and ULC CAN/ULC 536 standards.

Compatibility

The SIGA-PS detectors are compatible only with the Signature Loop Controller.

Warnings & Cautions

This detector will not operate without electrical power. As fires frequently cause power interruption, we suggest you discuss further safeguards with your fire protection specialist.

This detector will NOT sense fires that start in areas where smoke cannot reach the detector. Smoke from fires in walls, roofs, or on the opposite side of closed doors may not reach the detector to alarm it.

Accessories

All detector mounting bases have wiring terminals that are accessible from the "room-side" after mounting the base to the electrical box. The bases mount to North American 1-gang boxes and to 3½ inch or 4 inch octagon boxes, 1½ inches (38 mm) deep. They also mount to European BESA and 1-gang boxes with 60.3 mm fixing centers. The SIGA-SB4, SIGA-RB4, and SIGA-IB4 mount to North American 4 inch sq. electrical boxes in addition to the above boxes. They include the SIGA-TS4 Trim Skirt which is used to cover the "mounting ears" on the base. The SIGA-AB4G mounts to a 4" sqare box only.



SIGA-AB4G Audible Base | SIGA-SB Standard Base | SIGA-IB Isolator Base | SIGA-RB Relay Base | SIGA-LED Remote LED

Standard Base SIGA-SB, SIGA-SB4 - This is the basic mounting base for GE Security Signature Series detectors. The SIGA-LED Remote LED is supported by the Standard Base.

Relay Base SIGA-RB, SIGA-RB4 - This base includes a relay. Normally open or closed operation is selected during installation. The dry contact is rated for 1 amp (pilot duty) @ 30 Vdc. The relay's position is supervised to avoid accidentally jarring it out of position. The SIGA-RB can be operated as a control relay if programmed to do so at the control panel (EST3 V.2 only). The relay base does not support the SIGA-LED Remote LED.

Audible Base SIGA-AB4G - This base is designed for use where localized or group alarm signaling is required. When the detector senses an alarm condition, the audible base emits a local alarm signal. The optional SIGA-CRR Polarity Reversal Relay can be used for sounding to other audible bases on the same 24 Vdc circuit.

Relay and Audible Bases operate as follows:

- at system power-up or reset, the relay is de-energized
- when a detector is installed in the base with the power on, the relay energizes for four seconds, then de-energizes
- when a detector is removed from a base with the power on, the relay is de-energized
- when the detector enters the alarm state, the relay is energized.

Isolator Base SIGA-IB, SIGA-IB4 - This base includes a built-in line fault isolator for use on Class A circuits. A detector must be installed for it to operate. The isolator base does not support the SIGA-LED Remote LED.

The isolator operates as follows:

- a short on the line causes all isolators to open within 23 msec
- at 10 msec intervals, beginning on one side of the Class A circuit nearest the loop controller, the isolators close to provide the next isolator down the line with power
- when the isolator next to the short closes, reopens within 10 msec.

The process repeats beginning on the other side of the loop controller.

Remote LED SIGA-LED - The remote LED connects to the SIGA-SB or SIGA-SB4 Standard Base only. It features a North American size 1-gang plastic faceplate with a white finish and red alarm LED.

SIGA-TS4 Trim Skirt - Supplied with 4 inch bases, it can also be ordered separately to use with the other bases to help hide surface imperfections not covered by the smaller bases.

2014903431

Application

Although photoelectric detectors have a wide range of fire sensing capabilities they are best suited for detecting slow, smoldering fires. The table below shows six standard test fires used to rate the sensitivity of smoke and heat detectors. The table indicates that no single sensing element is suited for all test fires.

GE Security recommends that this detector be installed according to latest recognized edition of national and local fire alarm codes.

Test Fire	SIGA-IS Ion	SIGA-PS Photo	SIGA-HRS and SIGA-HFS Rate-of-Rise/ Fixed Temp.	SIGA-PHS Photo Heat 3D	SIGA-IPHS Ion/Photo/Heat 4D
Open Wood	**optimum**	unsuitable	**optimum**	very suitable	**optimum**
Wood Pyrolysis	suitable	**optimum**	unsuitable	**optimum**	**optimum**
Smouldering Cotton	very suitable	**optimum**	unsuitable	**optimum**	**optimum**
Poly Urethane Foam	very suitable	very suitable	suitable	very suitable	**optimum**
n-Heptane	**optimum**	very suitable	very suitable	**optimum**	**optimum**
Liquid Fire without Smoke	unsuitable	unsuitable	**optimum**	very suitable	very suitable

Typical Wiring

The detector mounting bases accept #18 AWG (0.75mm²), #16 (1.0mm²), #14 AWG (1.5mm²), and #12 AWG (2.5mm²) wire sizes.

Note: Sizes #16 AWG (1.0mm²) and #18 AWG (0.75mm²) are preferred for ease of installation. See Signature Loop Controller catalog sheet for detailed wiring requirement specifications.

Standard Detector Base, SIGA-SB, SIGA-SB4

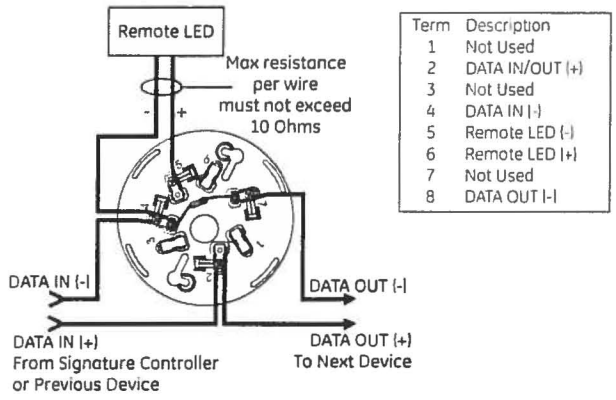

Term	Description
1	Not Used
2	DATA IN/OUT (+)
3	Not Used
4	DATA IN (-)
5	Remote LED (-)
6	Remote LED (+)
7	Not Used
8	DATA OUT (-)

Relay Detector Base, SIGA-RB, SIGA-RB4

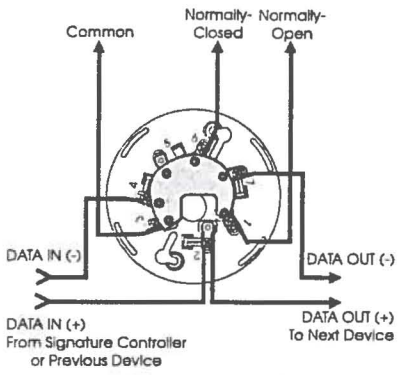

Term	Description
1	Normally Open
2	DATA IN/OUT (+)
3	Common
4	DATA IN (-)
5	Not Used
6	Normally-Closed
7	DATA OUT (-)

CONTACT RATING
1.0 Amp @ 30 VDC
(Pilot Duty)

Isolator Detector Base, SIGA-IB, SIGA-IB4

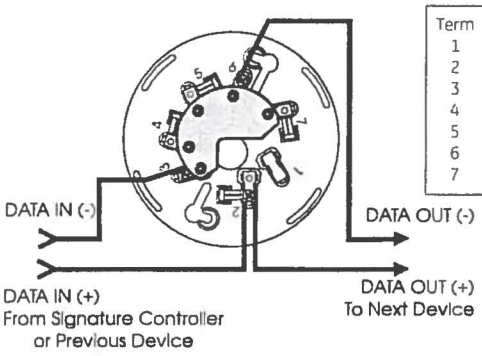

Term	Description
1	Not Used
2	DATA IN/OUT (+)
3	DATA IN (-)
4	Not Used
5	Not Used
6	DATA OUT (-)
7	Not Used

Audible Detector Base, SIGA-AB4G

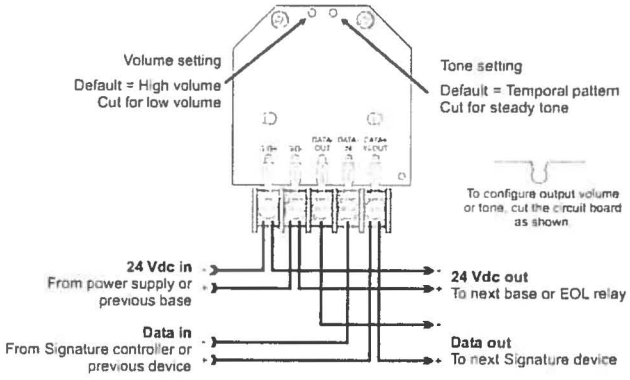

GE
Security

U.S.
T 888-378-2329
F 866-503-3996

Canada
T 519 376 2430
F 519 376 7258

Asia
T 852 2907 8108
F 852 2142 5063

Australia
T 61 3 9259 4700
F 61 3 9259 4799

Europe
T 32 2 725 11 20
F 32 2 721 86 13

Latin America
T 305 593 4301
F 305 593 4300

www.gesecurity.com/est

© 2006 General Electric Company
All Rights Reserved

Signature Series is a Trademark of GE Security.

2014903431

Specifications

Sensing Element	Photoelectric - Light Scattering Principle
Storage & Operating Environment	Air Velocity Range: 0 to 5,000 ft/min (0 to 25.39 m/s); Humidity: 0 to 93% RH, Non-Condensing Operating Temp: 32°F to 120°F (0°C to 49°C); Storage Temp: -4°F to 140°F (-20°C to 60°C)
Sensitivity Range	ULI/ULC - 0.67% to 3.77% obscuration/foot
User Selected Alarm Sensitivity Settings	Most Sensitive: 1.0%/ft.; More Sensitive: 2.0%/ft.; Normal: 2.5%/ft.; Less Sensitive: 3.0%/ft.; Least Sensitive: 3.5%/ft.
Pre-alarm Sensitivity	5% increments, allowing up to 20 pre-alarm settings
Operating Voltage	15.2 to 19.95 Vdc (19 Vdc nominal)
Operating Current	Quiescent: 45µA @ 19 V; Alarm: 45µA @ 19 V Emergency Stand-alone Alarm Mode: 18mA Pulse Current: 100 µA (100 msec); During Communication: 9 mA max.
Construction & Finish	High Impact Engineering Polymer - White
Compatible Mounting Bases	SIGA-SB Standard Base, SIGA-RB Relay Base, SIGA-IB Isolator Base, SIGA-AB4, SIGA-AB4G Audible Bases
LED Operation	On-board Green LED - Flashes when polled; On-board Red LED - Flashes when in alarm Both LEDs - Glow steady when in alarm (stand-alone) Compatible Remote Red LED (model SIGA-LED) Flashes when in alarm
Compatibility	Use With: SIGNATURE Loop Controller
Address Requirements	Uses one Device Address
Agency Listings	UL, ULC, MEA, CSFM
UL Listed Spacing	30 ft

Ordering Information

Catalog Number	Description	Ship Wt. lbs (kg)
SIGA-PS	Intelligent Photoelectric Detector - UL/ULC Listed	0.5 (.23)
Accessories		
SIGA-SB	Detector Mounting Base - Standard	
SIGA-SB4	4-inch Detector Mounting Base c/w SIGA-TS4 Trim Skirt	
SIGA-RB	Detector Mounting Base w/Relay	
SIGA-RB4	4-inch Detector Mounting Base w/Relay, c/w SIGA-TS4 Trim Skirt	0.2 (.09)
SIGA-IB	Detector Mounting Base w/Fault Isolator	
SIGA-IB4	4-inch Detector Mounting Base w/ Fault Isolator, c/w SIGA-TS4 Trim Skirt	
SIGA-LED	Remote Alarm LED	
SIGA-AB4G	Audible (Sounder) Base	.3 (0.15)
SIGA-TS4	Trim Skirt (supplied with 4-inch bases)	.1 (.04)

imagination at work

Overview

Signature Series Model SIGA-HFS and SIGA-HRS Intelligent Heat Detectors gather analog information from their fixed temperature and/or rate-of-rise heat sensing elements and converts it into digital signals. The detector's on-board microprocessor measures and analyzes these signals. It compares the information to historical readings and time patterns to make an alarm decision. Digital filters remove signal patterns that are not typical of fires. Unwanted alarms are virtually eliminated.

The microprocessor in each detector provides four additional benefits - Self-diagnostics and History Log, Automatic Device Mapping, Stand-alone Operation and Fast, Stable Communication.

Standard Features

Note: *Some features described here may not be supported by all control systems. Check your control panel's Installation and Operation Guide for details.*

- 70 foot (21.3 meter) spacing
- 15° F (9° C)/min rate-of-rise/135° F (57° C) ft. and 135° F (57 ° C) fixed temperature type
- Intelligent detector c/w integral microprocessor
- Non-volatile memory
- Automatic device mapping
- Electronic addressing
- Identification of defective detectors
- Twin RED/GREEN status LEDs
- Standard, relay, fault isolator, and audible mounting bases
- Designed and manufactured to ISO 9001 standards

Intelligent Heat Detectors

SIGA-HFS & SIGA-HRS

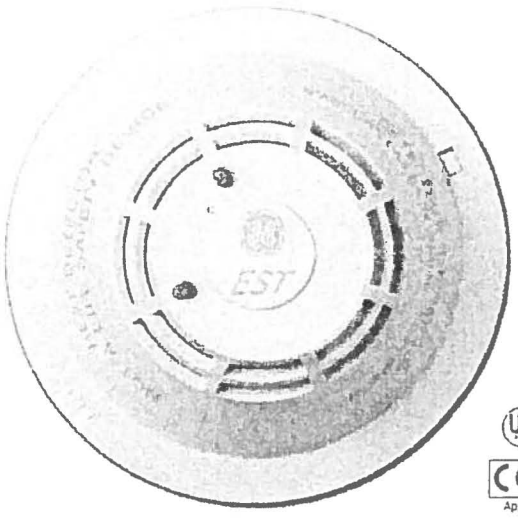

Application Notes Available

Signature Series Overview

Self-diagnostics and History Log - Each Signature Series detector constantly runs self-checks to provide important maintenance information. The results of the self-check are automatically updated and permanently stored in the detector's non-volatile memory. This information is accessible for review any time at the control panel, PC, or by using the SIGA-PRO Signature Program/Service Tool.

In the unlikely event that an unwanted alarm does take place, the control panel's history file can be called up to help isolate the problem and prevent it from happening again.

Automatic Device Mapping - The loop controller learns where each device's serial number address is installed relative to other devices on the circuit. This mapping feature provides supervision of each device's installed location to prevent a detector from being reinstalled (after cleaning etc.) in a different location from where it was originally. The history log for the detector remains relevant and intact regardless of its new location.

The Signature Series Data Entry Program also uses the mapping feature. With interactive menus and graphic support, the wired circuits between each device can be examined. Layout or "as-built" drawing information showing wire branches (T-taps), device types and their address are stored on disk for printing hard copy. This takes the mystery out of the installation. The preparation of as-built drawings is fast and efficient.

Stand-alone Operation - A decentralized alarm decision by the detector is guaranteed. On-board intelligence permits the detector to operate in stand-alone mode. If loop controller CPU communications fail for more than four seconds, all devices on that circuit go into stand-alone mode. The circuit acts like a conventional alarm receiving circuit. Each detector on the circuit continues to collect and analyze information from its surroundings. Both the SIGA-HRS and SIGA-HFS detectors alarm if the ambient temperature increases to 135 F (57°C) or for the SIGA-HRS only, the temperature increases at a rate exceeding 15°F (9°C)/minute. If the detector is mounted to a relay base, the relay operates. Similarly, if it is mounted to an audible base, the on-board horn sounds.

Fast Stable Communication - On-board intelligence means less information needs to be sent between the detector and the loop controller. Other than regular supervisory polling response, the detector only needs to communicate with the control panel when it has something new to report. This provides very fast control panel response time and allows a lower baud rate (speed) to be used for communication on the circuit. The lower baud rate offers several advantages including:

- less sensitivity to circuit wire characteristics
- less sensitivity to noise glitches on the cable
- less emitted noise from the data wiring
- twisted or shielded wiring is not required

Electronic Addressing - The loop controller electronically addresses each detector, saving valuable time during system commissioning. Setting complicated switches or dials is not required. Each detector has its own unique serial number stored in its on-board memory. The loop controller identifies each device on the circuit and assigns a "soft" address to that device's serial number. If desired, detectors can be addressed using the SIGA-PRO Signature Program/Service Tool.

Installation Spacing - The SIGA-HFS (fixed temperature) and the SIGA-HRS (fixed temperature/rate-of-rise combination) intelligent heat detectors are rated for installation at up to 70 foot (21.3 meter) spacing. These detectors may be installed in rooms with ambient temperatures up to 100°F (38°C).

Status LEDs - Twin LEDs are visible from any direction. A flashing GREEN LED shows normal system polling from the loop controller. A flashing RED LED means the detector is in alarm state. Both LEDs on steady shows alarm state - stand-alone mode. Normal GREEN LED activity is not distracting to building occupants, but can be quickly spotted by a maintenance technician.

Quality and Reliability - GE Security detectors are manufactured in North America to strict international ISO 9001 standards. All electronics utilize surface mount technology (SMT) for smaller size and greater immunity to RF noise. A conformal coating is used for humidity and corrosion resistance. All critical contacts are gold plated.

Installation

Signature Series detectors mount to North American 1-gang boxes, 3-1/2 inch or 4 inch octagon boxes, and to 4 inch square electrical boxes 1-1/2 inches (38 mm) deep. They mount to European BESA and 1-gang boxes with 60.3 mm fixing centers.

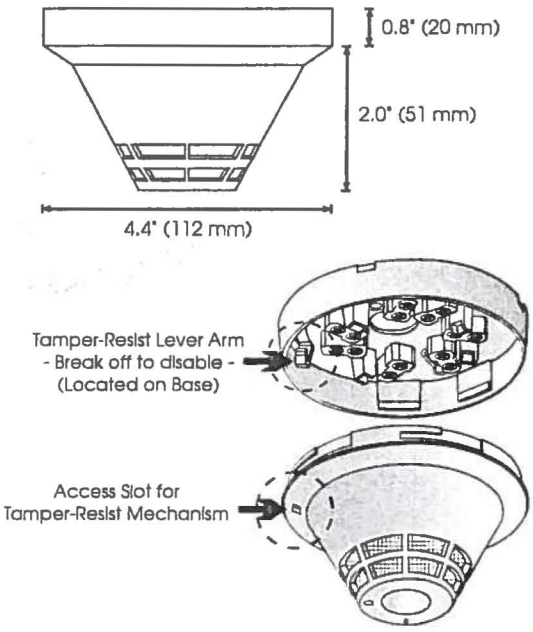

Application

The table below shows six standard test fires used to rate the sensitivity of smoke and heat detectors. The table indicates that no single sensing element is suited for all test fires.

GE Security recommends that this detector be installed according to latest recognized edition of national and local fire alarm codes.

Test Fire	SIGA-IS Ion	SIGA-PS Photo	SIGA-HRS and SIGA-HFS Rate-of-Rise/ Fixed Temp.	SIGA-PHS Photo Heat 3D	SIGA-IPHS Ion/Photo/Heat 4D
Open Wood	**optimum**	unsuitable	**optimum**	very suitable	**optimum**
Wood Pyrolysis	suitable	**optimum**	unsuitable	**optimum**	**optimum**
Smouldering Cotton	very suitable	**optimum**	unsuitable	**optimum**	**optimum**
Poly Urethane Foam	very suitable	very suitable	suitable	very suitable	**optimum**
n-Heptane	**optimum**	very suitable	very suitable	**optimum**	**optimum**
Liquid Fire without Smoke	unsuitable	unsuitable	**optimum**	very suitable	very suitable

Typical Wiring

The detector mounting bases will accept #18 AWG (0.75mm²), #16 (1.0mm²), #14 AWG (1.5mm²), and #12 AWG (2.5mm²) wire sizes.

Note: Sizes #16 AWG (1.0mm²) and #18 AWG (0.75mm²) are preferred for ease of installation. See Signature Loop Controller catalog sheet for detailed wiring requirement specifications.

Standard Detector Base, SIGA-SB, SIGA-SB4

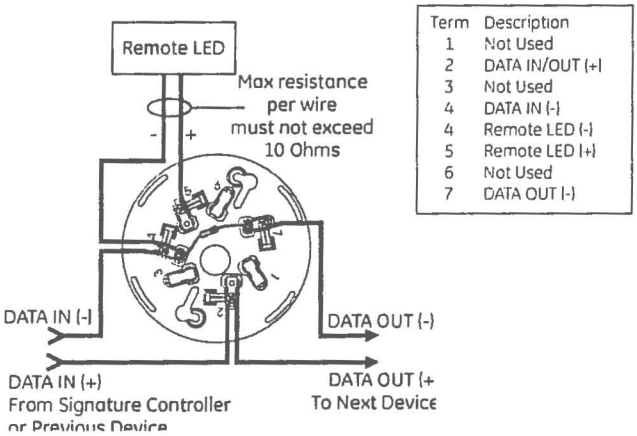

Term	Description
1	Not Used
2	DATA IN/OUT (+)
3	Not Used
4	DATA IN (-)
4	Remote LED (-)
5	Remote LED (+)
6	Not Used
7	DATA OUT (-)

Relay Detector Base, SIGA-RB, SIGA-RB4

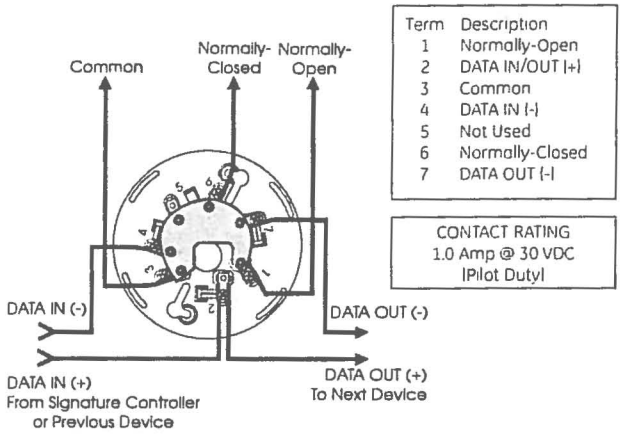

Term	Description
1	Normally-Open
2	DATA IN/OUT (+)
3	Common
4	DATA IN (-)
5	Not Used
6	Normally-Closed
7	DATA OUT (-)

CONTACT RATING
1.0 Amp @ 30 VDC
(Pilot Duty)

Isolator Detector Base, SIGA-IB, SIGA-IB4

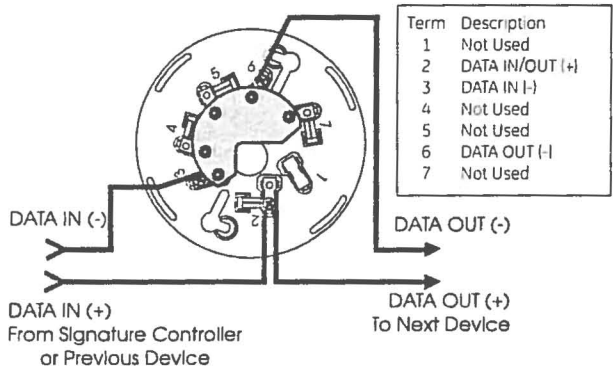

Term	Description
1	Not Used
2	DATA IN/OUT (+)
3	DATA IN (-)
4	Not Used
5	Not Used
6	DATA OUT (-)
7	Not Used

Audible Detector Base, SIGA-AB4G

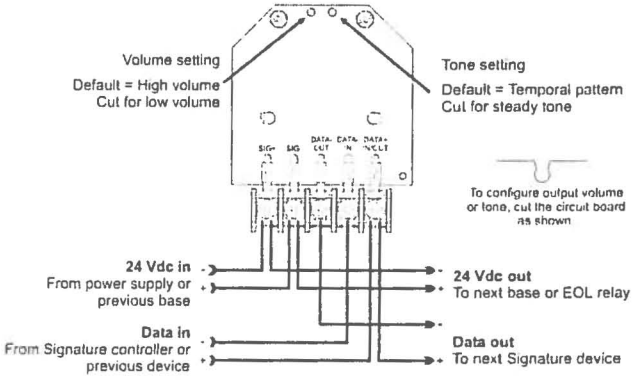

Accessories

All detector mounting bases have wiring terminals that are accessible from the "room-side" after mounting the base to the electrical box. The bases mount to North American 1-gang boxes and to 3½ inch or 4 inch octagon boxes, 1½ inches (38 mm) deep. They also mount to European BESA and 1-gang boxes with 60.3 mm fixing centers. The SIGA-SB4, SIGA-RB4, and SIGA-IB4 mount to North American four inch square electrical boxes in addition to the above boxes. They include the SIGA-TS4 Trim Skirt which is used to cover the "mounting ears" on the base. The SIGA-AB4G mounts to a 4" sqare box only.

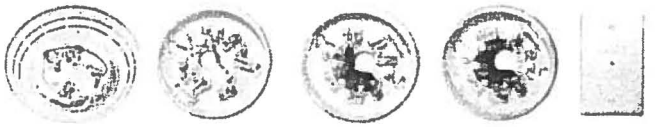

SIGA-AB4G Audible Base | SIGA-SB Standard Base | SIGA-IB Isolator Base | SIGA-RB Relay Base | SIGA-LED Remote LED

Standard Base SIGA-SB, SIGA-SB4 - This is the basic mounting base for GE Security Signature Series detectors. The SIGA-LED Remote LED is supported by the Standard Base.

Relay Base SIGA-RB, SIGA-RB4 - This base includes a relay. Normally open or closed operation is selected during installation. The dry contact is rated for 1 amp (pilot duty) @ 30 Vdc. The relay's position is supervised to avoid accidentally jarring it out of position. The SIGA-RB can be operated as a control relay if programmed to do so at the control panel (EST3 V. 2 only). The relay base does not support the SIGA-LED Remote LED.

Audible Base SIGA-AB4G - This base is designed for use where localized or group alarm signaling is required. When the detector senses an alarm condition, the audible base emits a local alarm signal. The optional SIGA-CRR Polarity Reversal Relay can be used for sounding to other audible bases on the same 24 Vdc circuit.

Relay and Audible Bases operate as follows:

- at system power-up or reset, the relay is de-energized
- when a detector is installed in the base with the power on, the relay energizes for four seconds, then de-energizes
- when a detector is removed from a base with the power on, the relay is de-energized
- when the detector enters the alarm state, the relay is energized.

Isolator Base SIGA-IB, SIGA-IB4 - This base includes a built-in line fault isolator for use on Class A circuits. A detector must be installed for it to operate. The isolator base does not support the SIGA-LED Remote LED.

The isolator operates as follows:

- a short on the line causes all isolators to open within 23 msec
- at 10 msec intervals, beginning on one side of the Class A circuit nearest the loop controller, the isolators close to provide the next isolator down the line with power
- if the isolator next to the short closes, it reopens within 10 msec.

The process repeats beginning on the other side of the loop controller.

Remote LED SIGA-LED - The remote LED connects to the SIGA-SB or SIGA-SB4 Standard Base only. It features a North American size 1-gang plastic faceplate with a white finish and red alarm LED.

SIGA-TS4 Trim Skirt - Supplied with 4 inch bases, it can also be ordered separately to use with the other bases to help hide surface imperfections not covered by the smaller bases.

Warnings & Cautions

This detector will not operate without electrical power. As fires frequently cause power interruption, we suggest you discuss further safeguards with your fire protection specialist.

This detector will NOT sense fires that start in areas where heat cannot reach the detector. Heat from fires in walls, roofs, or on the opposite side of closed doors may not reach the detector to alarm it.

The heat sensor in this device only provides a source of information to supplement the information provided by photoelectric or ionization smoke detectors which may be located nearby. The heat detector by itself does NOT provide life safety protection. Under no circumstances should heat detectors be relied on as the sole means of fire protection.

Compatibility

The SIGA-HFS and SIGA-HRS detectors are compatible only with GE Security's Signature Loop Controller.

2014903431

Specifications

Catalog Number	SIGA-HFS	SIGA-HRS
Heat Sensing Element	Fixed Temperature	Fixed & Temperature/ Rate-of-Rise
Alarm Point	Alarms at 135°F (57°C) Ambient	Alarms at 135°F (57°C) Ambient or Temp. increase above 15°F (9°C) per min.
UL Listed Detector Spacing	70 feet (21.3 meters) center to center spacing	
Operating and Storage Environment	Operating Temp: 32°F to 100°F (0°C to 38°C) Storage Temp: -4°F to 140°F (-20°C to 60°C) Humidity: 0 to 93% RH, Non-Condensing	
Operating Voltage	15.2 to 19.95 Vdc (19 Vdc nominal)	
Operating Current	Quiescent: 45µA @ 19 V Alarm: 45µA @ 19V Emergency Stand-alone Alarm Mode: 18mA Pulse Current: 100 µA (100 msec)	
Construction & Finish	High Impact Engineering Polymer - White	
Compatible Mounting Bases	SIGA-SB Standard Base, SIGA-RB Relay Base, SIGA-IB Isolator Base, SIGA-AB4, SIGA-AB4G Audible Bases	
LED Operation	On-board Green LED - Flashes when polled On-board Red LED - Flashes when in alarm; Both LEDs - Glow steady when in alarm (stand-alone) Compatible Remote Red LED (model SIGA-LED) Flashes when in alarm	
Compatibility	Use With: SIGNATURE Loop Controller	
Address Requirements	Uses one device address	
Agency Listings	UL, ULC, MEA, CSFM	

Ordering Information

Catalog Number	Description	Ship Wt. lbs (kg)
SIGA-HFS	Intelligent Fixed Temperature Heat Detector - UL/ULC Listed	0.5 (0.23)
SIGA-HRS	Intelligent Fixed Temperature/Rate-of-Rise Heat Detector - UL/ULC Listed	
Accessories		
SIGA-SB	Detector Mounting Base	0.2 (.09)
SIGA-SB4	4-inch Detector Mounting Base c/w SIGA-TS Trim Skirt	
SIGA-RB	Detector Mounting Base w/Relay	
SIGA-RB4	4-inch Detector Mounting Base /w Relay c/w SIGA-TS Trim Skirt	
SIGA-IB	Detector Mounting Base w/Fault Isolator	
SIGA-IB4	4-inch Detector Mounting Base w/ Fault Isolator c/w SIGA-TS Trim Skirt	
SIGA-LED	Remote Alarm LED	
SIGA-AB4G	Audible (Sounder) Base	0.3 (0.15)
SIGA-TS4	Trim Skirt (supplied with 4-inch bases)	0.1 (.04)

2014903431

GE
Security

U.S.
T 888-378-2329
F 866-503-3996

Canada
T 519 376 2430
F 519 376 7258

Asia
T 852 2907 8108
F 852 2142 5063

Australia
T 61 3 9259 4700
F 61 3 9259 4799

Europe
T 32 2 725 11 20
F 32 2 721 86 13

Latin America
T 305 593 4301
F 305 593 4300

www.gesecurity.com/est

© 2006 General Electric Company
All Rights Reserved

Signature Series is a Trademark
of GE Security.

imagination at work

GE
Security

EST Fire & Life Safety
Intelligent Input/Output

2014903431

Overview

The SIGA-CT1 Single Input Module and SIGA-CT2/SIGA-MCT2 Dual Input Modules are intelligent analog addressable devices used to connect one or two Class B normally-open Alarm, Supervisory, or Monitor type dry contact Initiating Device Circuits (IDC).

The actual function of these modules is determined by the "personality code" selected by the installer. This code is downloaded to the module from the Signature loop controller during system configuration.

The input modules gather analog information from the initiating devices connected to them and convert it into digital signals. The module's on-board microprocessor analyzes the signal and decides whether or not to input an alarm.

The SIGA-CT1 and SIGA-CT2 mount to standard North American 1-gang electrical boxes, making them ideal for locations where only one module is required. Separate I/O and data loop connections are made to each module.

The SIGA-MCT2 is part of the UIO family of plug-in Signature Series modules. It functions identically to the SIGA-CT2, but takes advantage of the modular flexibility and easy installation that characterizes all UIO modules. Two- and six-module UIO motherboards are available. All wiring connections are made to terminal blocks on the motherboard. UIO assemblies may be mounted in GE Security enclosures.

Standard Features

- **Multiple applications**
  Including Alarm, Alarm with delayed latching (retard) for waterflow applications, Supervisory, and Monitor. The installer selects one of four "personality codes" to be downloaded to the module through the loop controller.
- **Plug-in (UIO) or standard 1-gang mount**
  UIO versions allow quick installation where multiple modules are required. The 1-gang mount version is ideal for remote locations that require a single module.
- **Automatic device mapping**
  Signature modules transmit information to the loop controller regarding their circuit locations with respect to other Signature devices on the wire loop.
- **Electronic addressing**
  Programmable addresses are downloaded from the loop controller, a PC, or the SIGA-PRO Signature Program/Service Tool. There are no switches or dials to set.
- **Non-volatile memory**
  Permanently stores serial number, type of device, and job number.
- **Stand-alone operation**
  The module makes decisions and inputs an alarm from initiating devices connected to it even if the loop controller's polling interrogation stops. (Function availability dependent upon control panel.)
- **Ground fault detection by address**
  Detects ground faults right down to the device level.

Input Modules

SIGA-CT1, SIGA-CT2 & SIGA-MCT2

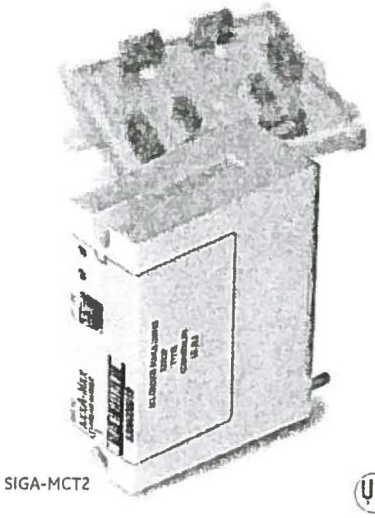

SIGA-MCT2

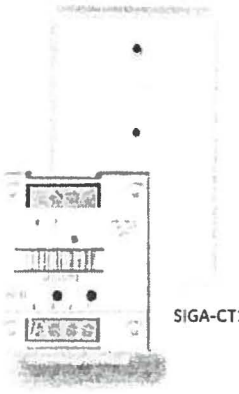

SIGA-CT1/2

MEA

Signature Series Overview

The Signature Series intelligent analog-addressable system from GE Security is an entire family of multi-sensor detectors and mounting bases, multiple-function input and output modules, network and non-network control panels, and user-friendly maintenance and service tools. Analog information from equipment connected to Signature devices is gathered and converted into digital signals. An onboard microprocessor in each Signature device measures and analyzes the signal and decides whether or not to input an alarm. The microprocessor in each Signature device provides four additional benefits – Self-diagnostics and History Log, Automatic Device Mapping, Stand-alone Operation and Fast, Stable Communication.

Self-diagnostics and History Log – Each Signature Series device constantly runs self-checks to provide important maintenance information. The results of the self-check are automatically updated and permanently stored in its non-volatile memory. This information is accessible for review any time at the control panel, PC, or using the SIGA-PRO Signature Program/Service Tool.

Automatic Device Mapping –The Signature Data Controller (SDC) learns where each device's serial number address is installed relative to other devices on the circuit. The SDC keeps a map of all Signature Series devices connected to it. The Signature Series Data Entry Program also uses the mapping feature. With interactive menus and graphic support, the wired circuits between each device can be examined. Layout or "as-built" drawing information showing branch wiring (T-taps), device types and their address are stored on disk for printing hard copy.

Installation

SIGA-CT1 and SIGA-CT2: modules mount to North American 2½ inch(64 mm) deep 1-gang boxes and 1½ inch (38 mm) deep 4 inch square boxes with 1-gang covers and SIGA-MP mounting plates. The terminals are suited for #12 to #18 AWG (2.5 mm² to 0.75 mm²) wire size.

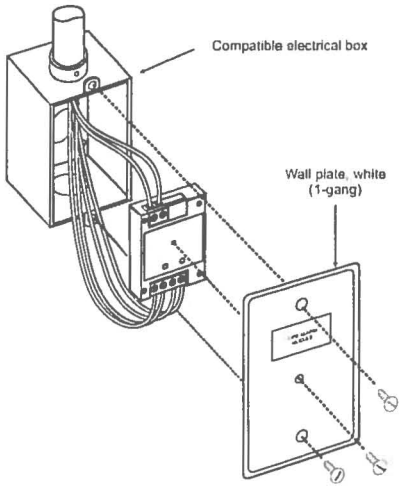

SIGA-MCT2: mount the UIO motherboard inside a suitable GE Security enclosure with screws and washers provided. Plug the SIGA-MCT2 into any available position on the motherboard and secure the module to the motherboard with the captive screws. Wiring connections are made to the terminals on the motherboard (see wiring diagram). UIO motherboard terminals are suited for #12 to #18 AWG (2.5 mm² to 0.75 mm²) wire size.

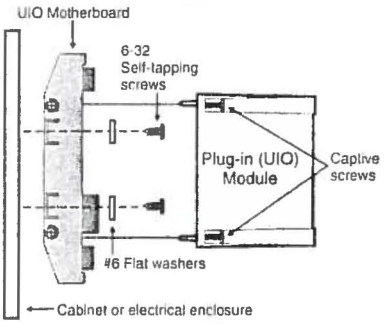

Electronic Addressing - The loop controller electronically addresses each module, saving valuable time during system commissioning. Setting complicated switches or dials is not required. Each module has its own unique serial number stored in its on-board memory. The loop controller identifies each device on the loop and assigns a "soft" address to each serial number. If desired, the modules can be addressed using the SIGA-PRO Signature Program/Service Tool.

GE Security recommends that this module be installed according to latest recognized edition of national and local fire alarm codes.

Application

The duty performed by the SIGA-CT1 and SIGA-CT2/MCT2 is determined by their sub-type code or "Personality Code". The code is selected by the installer depending upon the desired application and is downloaded from the loop controller.

One personality code can be assigned to the SIGA-CT1. Two personality codes can be assigned to the SIGA-CT2/MCT2. Codes 1, 2, 3 and 4 can be mixed on SIGA-CT2/MCT2 modules only. For example, personality code 1 can be assigned to the first address (circuit A) and code 4 can be assigned to the second address (circuit B).

NORMALLY-OPEN ALARM - LATCHING (Personality Code 1) - Assign to one or both circuits. Configures either circuit A or B or both for Class B normally open dry contact initiating devices such as Pull Stations, Heat Detectors, etc. An ALARM signal is sent to the loop controller when the input contact is closed. The alarm condition is latched at the module.

NORMALLY-OPEN ALARM - DELAYED LATCHING (Personality Code 2) - Assign to one or both circuits. Configures either circuit A or B or both for Class B normally-open dry contact initiating devices such as Waterflow Alarm Switches. An ALARM signal is sent to the loop controller when the input contact is closed for approximately 16 seconds. The alarm condition is latched at the module.

NORMALLY-OPEN ACTIVE - NON-LATCHING (Personality Code 3) - Assign to one or both circuits. Configures either circuit A or B or both for Class B normally-open dry contact monitoring input such as from Fans, Dampers, Doors, etc. An ACTIVE signal is sent to the loop controller when the input contact is closed. The active condition is not latched at the module.

NORMALLY-OPEN ACTIVE - LATCHING (Personality Code 4) - Assign to one or both circuits. Configures either circuit A or B or both for Class B normally open dry contact monitoring input such as from Supervisory and Tamper Switches. An ACTIVE signal is sent to the loop controller when the input contact is closed. The active condition is latched at the module.

Typical Wiring

Modules will accept #18 AWG (0.75mm²), #16 (1.0mm²), and #14AWG (1.50mm²), and #12 AWG (2.50mm²) wire sizes.

Note: Sizes #16 AWG (1.0mm²) and #18 AWG (0.75mm²) are preferred for ease of installation. See Signature Loop Controller catalog sheet for detailed wiring requirement specifications.

Initiating (Slave) Device Circuit Wire Specifications

Maximum Allowable Wire Resistance	50 ohms (25 ohms per wire) per Circuit	
Maximum Allowable Wire Capacitance	0.1µF per Circuit	
For Design Reference:	Wire Size	Maximum Distance to EOLR
	#18 AWG (0.75 mm²)	4,000 ft (1,219 m)
	#16 AWG (1.00 mm²)	
	#14 AWG (1.50 mm²)	
	#12 AWG (1.50 mm²)	

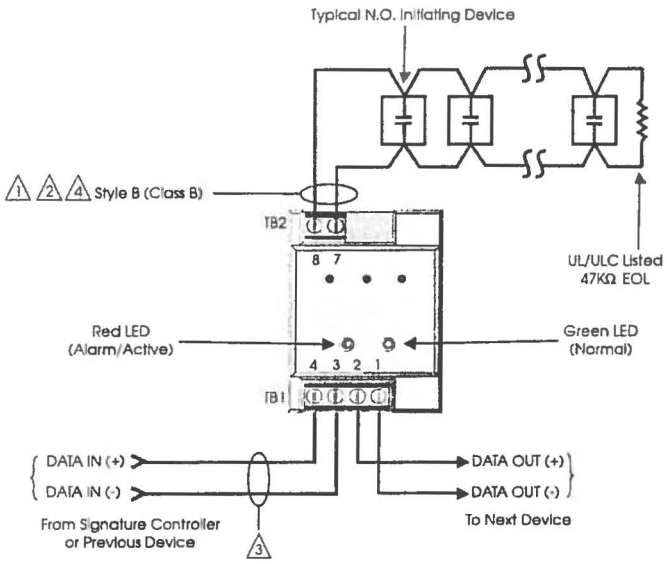

SIGA-CT1

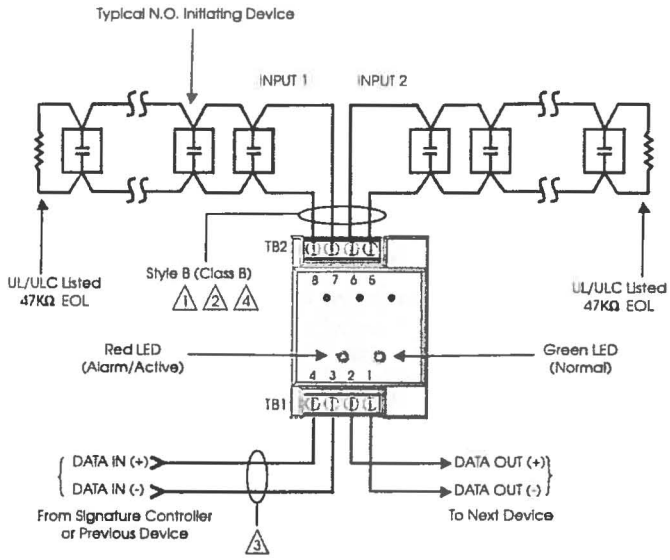

SIGA-CT2

NOTES

1. Maximum 25 Ohm resistance per wire.
2. Maximum #12 AWG (2.5 mm²) wire; Minimum #18 AWG (0.75 mm2).
3. Refer to Signature controller installation sheet for wiring specifications.
4. Maximum 10 Vdc @ 350 µA
5. The SIGA-UIO6R and the SIGA-UIO2R do not come with TB14.
6. All wiring is supervised and power-limited.
7. These modules will not support 2-wire smoke detectors.

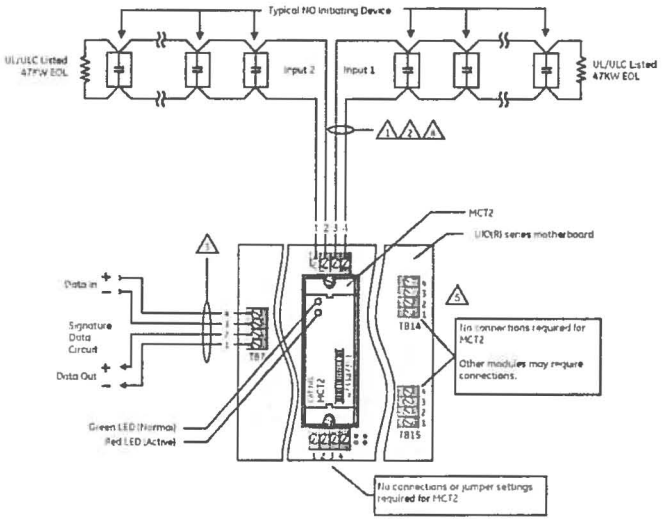

SIGA-MCT2

Warnings & Cautions

This module will not operate without electrical power. As fires frequently cause power interruption, we suggest you discuss further safeguards with your local fire protection specialist.

Compatibility

The Signature Series modules are compatible only with GE Security's Signature Loop Controller.

2014903431

GE
Security

U.S.
T 888-378-2329
F 866-503-3996

Canada
T 519 376 2430
F 519 376 7258

Asia
T 852 2907 8108
F 852 2142 5063

Australia
T 61 3 9259 4700
F 61 3 9259 4799

Europe
T 32 2 725 11 20
F 32 2 721 86 13

Latin America
T 305 593 4301
F 305 593 4300

www.gesecurity.com/est

© 2006 General Electric Company
All Rights Reserved

Signature Series is a Trademark of GE Security.

Specifications

Catalog Number	SIGA-CT1	SIGA-CT2	SIGA-MCT2
Description	Single Input Module	Dual Input Module	
Type Code	48 (factory set) Four sub-types (personality codes) are available	49 (factory set) Four sub-types (personality codes) are available	
Address Requirements	Uses One Module Address	Uses Two Module Addresses	
Operating Current	Standby = 250µA; Activated = 400µA	Standby = 396µA; Activated = 680µA	
Operating Voltage	15.2 to 19.95 Vdc (19 Vdc nominal)		
Construction	High Impact Engineering Polymer		
Mounting	North American 2½ inch (64 mm) deep one-gang boxes and 1½ inch (38 mm) deep 4 inch square boxes with one-gang covers and SIGA-MP mounting plates		UIO2R/6R/6 Motherboard
Storage and Operating Environment	Operating Temperature: 32°F to 120°F (0°C to 49°C) Storage Temperature: -4°F to 140°F (-20°C to 60°C); Humidity: 0 to 93% RH		
LED Operation	On-board Green LED - Flashes when polled; On-board Red LED - Flashes when in alarm/active Both LEDs - Glow steady when in alarm (stand-alone)		
Compatibility	Use with Signature Loop Controller		
Agency Listings	UL, ULC, MEA, CSFM		

Ordering Information

Catalog Number	Description	Ship Wt. lbs (kg)
SIGA-CT1	Single Input Module — UL/ULC Listed	0.4 (0.15)
SIGA-CT2	Dual Input Module — UL/ULC Listed	0.4 (0.15)
SIGA-MCT2	Dual Input Plug-in (UIO) Module — UL, ULC Listed	0.1 (0.05)

Related Equipment		
27193-11	Surface Mount Box - Red, 1-gang	1.0 (0.6)
27193-16	Surface Mount Box - White, 1-gang	1.0 (0.6)
SIGA-UIO2R	Universal Input-Output Module Board w/Riser Inputs — Two Module Positions	0.32 (0.15)
SIGA-UIO6R	Universal Input-Output Module Board w/Riser Inputs — Six Module Positions	0.62 (0.28)
SIGA-UIO6	Universal Input-Output Module Board — Six Module Positions	0.56 (0.25)
MFC-A	Multifunction Fire Cabinet — Red, supports Signature Module Mounting Plates	7.0 (3.1)
SIGA-MB4	Transponder Mounting Bracket (allows for mounting two 1-gang modules in a 2-gang box)	0.4 (0.15)
SIGA-MP1	Signature Module Mounting Plate, 1 footprint	1.5 (0.70)
SIGA-MP2	Signature Module Mounting Plate, 1/2 footprint	0.5 (0.23)
SIGA-MP2L	Signature Module Mounting Plate, 1/2 extended footprint	1.02 (0.46)

imagination at work

2014903431

Overview

The Control Relay Module and the Polarity Reversal Relay Module are part of the Signature Series system. They are intelligent analog addressable devices available in either plug-in (UIO) versions, or standard 1-gang mount versions.

The SIGA-CR/MCR Control Relay Module provides a Form "C" dry relay contact to control external appliances such as door closers, fans, dampers etc. This device does not provide supervision of the state of the relay contact. Instead, the on-board microprocessor ensures that the relay is in the proper ON/OFF state. Upon command from the loop controller, the SIGA-CR/MCR relay activates the normally open or normally-closed contact.

The SIGA-CRR/MCRR Polarity Reversal Relay Module provides a Form "C" dry relay contact to power and activate a series of SIGA-AB4G Audible Sounder Bases. Upon command from the Signature loop controller, the SIGA-CRR reverses the polarity of its 24 Vdc output, thus activating all Sounder Bases on the data loop.

Standard-mount versions (SIGA-CR and SIGA-CRR) are installed to standard North American 1-gang electrical boxes, making them ideal for locations where only one module is required. Separate I/O and data loop connections are made to each module.

Plug-in UIO versions (SIGA-MCR and SIGA-MCRR) are part of the UIO family of plug-in Signature Series modules. They function identically to the standard mount versions, but take advantage of the modular flexibility and easy installation that characterizes all UIO modules. Two- and six-module UIO motherboards are available. All wiring connections are made to terminal blocks on the motherboard. UIO assemblies may be mounted in GE Security enclosures.

Standard Features

- **Provides one no/nc contact (SIGA-CR/MCR)**
  Form "C" dry relay contact can be used to control external appliances such as door closers, fans, dampers etc.
- **Allows group operation of sounder bases**
  The SIGA-CRR/MCRR reverses the polarity of its 24 Vdc output, thus activating all Sounder Bases on the data loop.
- **Plug-in (UIO) or standard 1-gang mount**
  UIO versions allow quick installation where multiple modules are required. The 1-gang mount version is ideal for remote locations that require a single module.
- **Automatic device mapping**
  Signature modules transmit information to the loop controller regarding their circuit locations with respect to other Signature devices on the wire loop.
- **Electronic addressing**
  Programmable addresses are downloaded from the loop controller, a PC, or the SIGA-PRO Signature Program/Service Tool; there are no switches or dials to set.
- **Intelligent device with microprocessor**
  All decisions are made at the module to allow lower communication speed with substantially improved control panel response time and less sensitivity to line noise and loop wiring properties; twisted or shielded wire is not required.
- **Ground fault detection by address**
  Detects ground faults right down to the device level.

Control Relay Modules

SIGA-CR, SIGA-MCR, SIGA-CRR, SIGA-MCRR

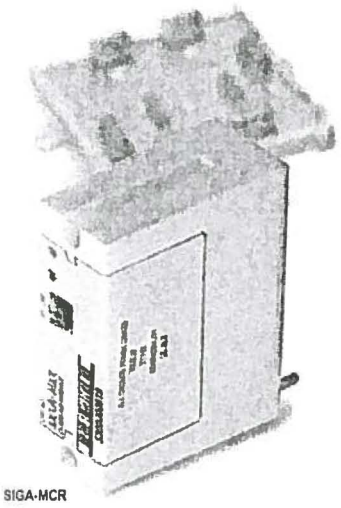
SIGA-MCR

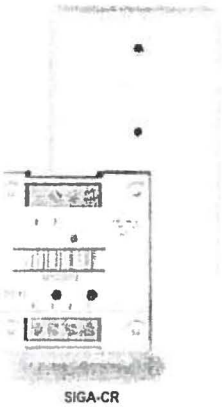
SIGA-CR

MEA

2014903431

Installation

SIGA-CR and SIGA-CRR: modules mount to North American 2½ inch (64 mm) deep 1-gang boxes and 1½ inch (38 mm) deep 4 inch square boxes with 1-gang covers and SIGA-MP mounting plates. The terminals are suited for #12 to #18 AWG (2.5 mm^2 to 0.75 mm^2) wire size.

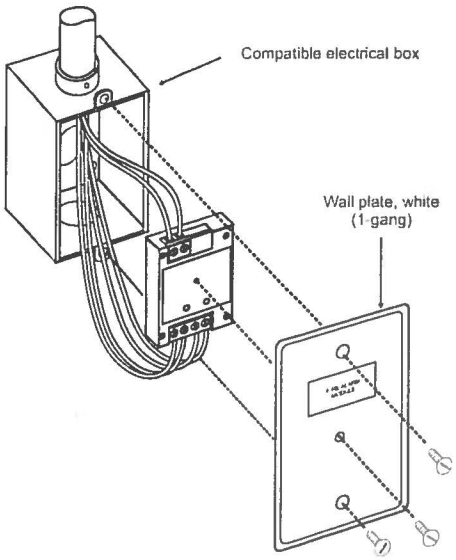

SIGA-MCR and SIGA-MCRR: mount the UIO motherboard inside a suitable GE Security enclosure with screws and washers provided. Plug the module into any available position on the motherboard and secure the module to the motherboard with the captive screws. Wiring connections are made to the terminals on the motherboard (see wiring diagram). UIO motherboard terminals are suited for #12 to #18 AWG (2.5 mm^2 to 0.75 mm^2) wire size.

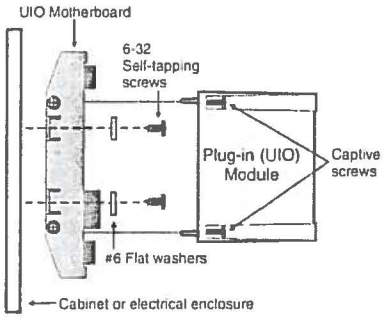

Electronic Addressing - The loop controller electronically addresses each module, saving valuable time during system commissioning. Setting complicated switches or dials is not required. Each module has its own unique serial number stored in its on-board memory. The loop controller identifies each device on the loop and assigns a "soft" address to each serial number. If desired, the modules can be addressed using the SIGA-PRO Signature Program/Service Tool.

GE Security recommends that this module be installed according to latest recognized edition of national and local fire alarm codes.

Application

The operation of Signature Series control relays is determined by their sub-type code or "Personality Code."

Personality Code 8: CONTROL RELAY (SIGA-CR/MCR) - Dry Contact Output. This setting configures the module to provide one Form "C" DRY RELAY CONTACT to control Door Closers, Fans, Dampers, etc. Contact rating is 2.0 amp @ 24 Vdc; 0.5 amp @ 120 Vac (or 220 Vac for non-UL applications). Personality Code 8 is assigned at the factory. No user configuration is required.

Personality Code 8: POLARITY REVERSAL RELAY MODULE (SIGA-CRR/MCRR). This setting configures the module to reverse the polarity of its 24 Vdc output. Contact rating is 2.0 amp @ 24 Vdc (pilot duty). Personality Code 8 is assigned at the factory. No user configuration is required.

Compatibility

The Signature Series modules are compatible only with GE Security's Signature Loop Controller.

Warnings & Cautions

This module will not operate without electrical power. As fires frequently cause power interruption, we suggest you discuss further safeguards with your local fire protection specialist.

Testing & Maintenance

The module's automatic self-diagnosis identifies when it is defective and causes a trouble message. The user-friendly maintenance program shows the current state of each module and other pertinent messages. Single modules may be turned off (deactivated) temporarily, from the control panel. Availability of maintenance features is dependent on the fire alarm system used. Scheduled maintenance (Regular or Selected) for proper system operation should be planned to meet the requirements of the Authority Having Jurisdiction (AHJ). Refer to current NFPA 72 and ULC CAN/ULC 536 standards.

2014903431

Typical Wiring

Modules will accept #18 AWG (0.75mm²), #16 (1.0mm²), #14 AWG (1.50mm²) and #12 AWG (2.5mm²) wire sizes.

Note: Sizes #16 AWG (1.0mm²) and #18 AWG (0.75mm²) are preferred for ease of installation. See Signature Loop Controller catalog sheet for detailed wiring requirement specifications.

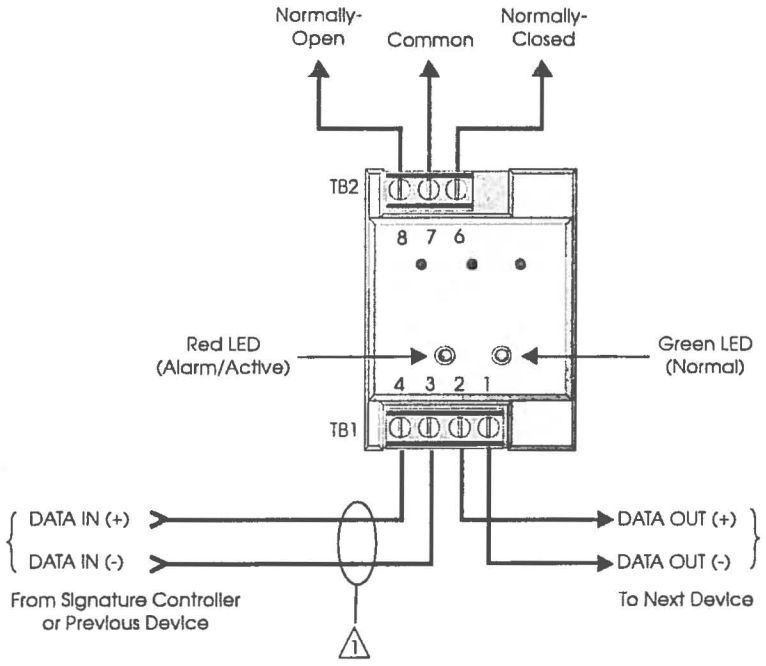

SIGA-CR Control Relay

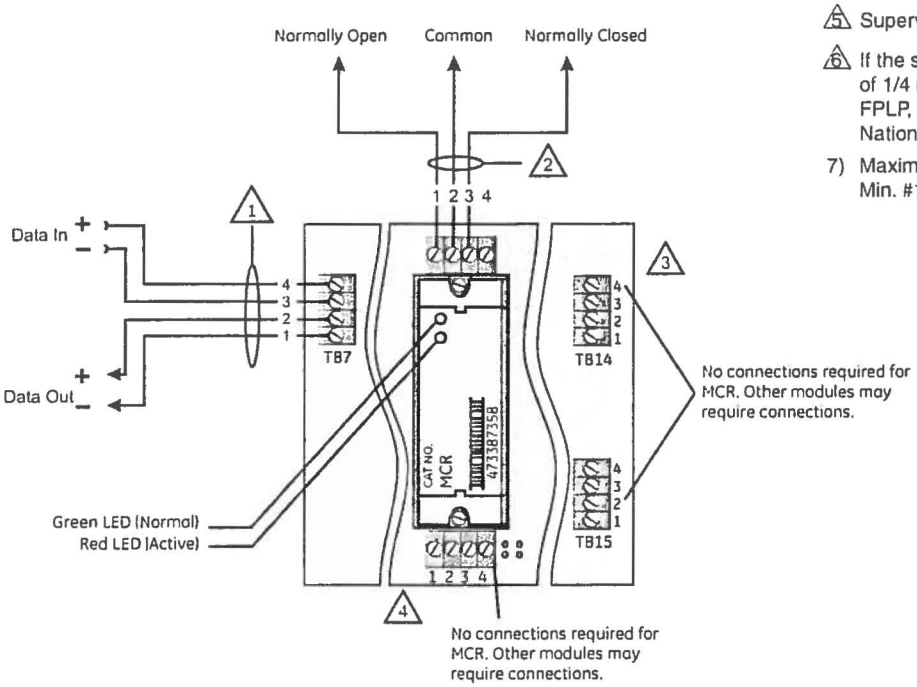

SIGA-MCR Control Relay

Notes

1. Refer to Signature Loop Controller Installation Sheet for wiring specifications.
2. NFPA 72 requires that the SIGA-CR/SIGA-MCR be installed in the same room as the device it is controlling. This requirement may not apply in all markets. Check with your local AHJ for details.
3. The SIGA-UIO6R and the SIGA-UIO2R do not come with TB14.
4. The SIGA-UIO6 does not come with TB8 through TB13.
5. Supervised and power-limited.
6. If the source is nonpower-limited, maintain a space of 1/4 inch from power-limited wiring or use FPL, FPLP, FPLR, or an equivalent in accordance with the National Electrical Code.
7) Maximum #12 AWG (2.5mm²) wire. Min. #18 (0.75mm²).

Typical Wiring

Modules will accept #18 AWG (0.75mm²), #16 (1.0mm²), #14 AWG (1.50mm²) and #12 AWG (2.50mm²) wire sizes.

Note: Sizes #16 AWG (1.0mm²) and #18 AWG (0.75mm²) are preferred for ease of installation. See Signature Loop Controller catalog sheet for detailed wiring requirement specifications.

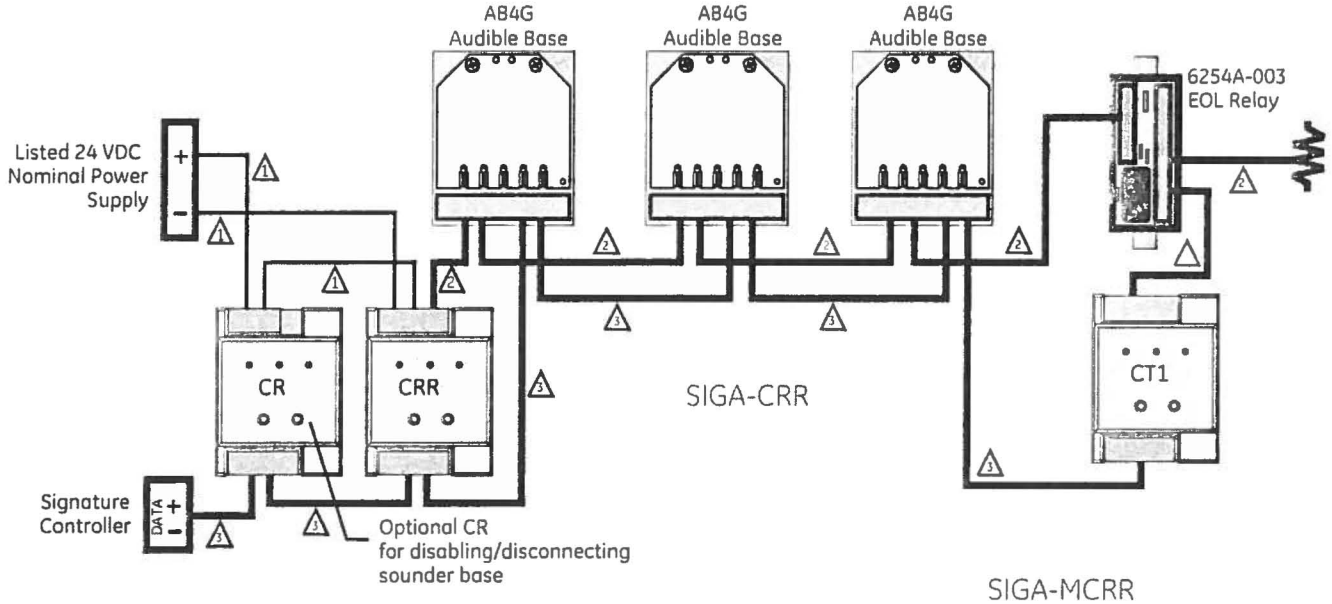

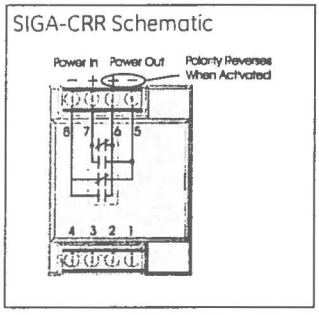

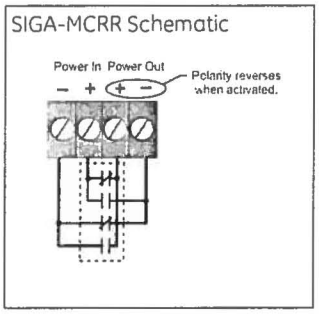

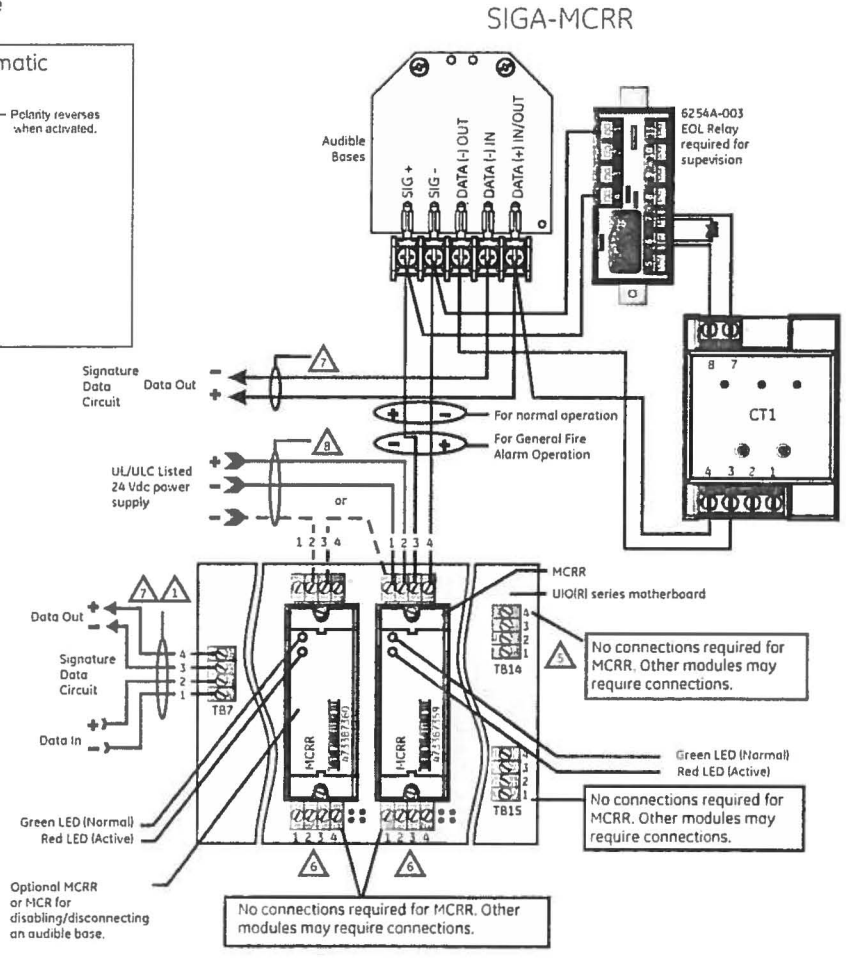

Notes

1. Refer to the Signature controller installation sheet for wiring.
2. One Pair of Wires (24 Vdc power).
3. One Pair of Wires (Signature Data).
4. Single Wire (24 Vdc power).
5. The SIGA-UIO6R and the SIGA-UIO2R do not come with TB14.
6. The SIGA-UIO6 does not come with TB8 through TB13.
7. Supervised and power-limited.
8. If the source is nonpower-limited, maintain a space of 1/4 inch from power-limited wiring or use FPL, FPLP, FPLR, or an equivalent in accordance with the National Electrical Code.
9. Maximum #12 AWG (2.5 mm²) wire; Minimum #18 AWG (0.75 mm²).
10. End-of-Line Relay must monitor and report power supply trouble to control panel.
11. Class B Data wiring may be "T-tapped."

2014903431

Specifications

Catalog Number	SIGA-CR	SIGA-MCR	SIGA-CRR	SIGA-MCRR
Description	Control Relay		Polarity Reversal Relay	
Type Code	Personality Code 8 (Factory Set)		Personality Code 8 (Factory Set)	
Address Requirements	Uses 1 Module Address			
Operating Current	Standby = 100µA Activated = 100µA			
Operating Voltage	15.2 to 19.95 Vdc (19 Vdc nominal)			
Relay Type and Rating	Form "C" 24 VDC = 2 amps (pilot duty) 120 Vac = 0.5 amps 220 Vac (non-UL) = 0.5 amps			
Mounting	North American 2½ inch (64 mm) deep 1-gang boxes and 1½ inch (38 mm) deep 4 inch square boxes with 1-gang covers and SIGA-MP mounting plates	Plugs into UIO2R, UIO6R or UIO6 Motherboards	North American 2½ inch (64 mm) deep 1-gang boxes and 1½ inch (38 mm) deep 4 inch square boxes with 1-gang covers and SIGA-MP mounting plates	Plugs into UIO2R, UIO6R or UIO6 Motherboards
Construction & Finish	High Impact Engineering Polymer			
Storage and Operating Environment	Operating Temperature: 32°F to 120°F (0°C to 49°C) Storage Temperature: -4°F to 140°F (-20°C to 60°C) Humidity: 0 to 93% RH			
LED Operation	On-board Green LED - Flashes when polled On-board Red LED - Flashes when in alarm/active			
Compatibility	Use With: Signature Loop Controller			
Agency Listings	UL, ULC, CSFM, MEA			

Ordering Information

Catalog Number	Description	Ship Weight - lbs (kg)
SIGA-CR	Control Relay Module (Standard Mount)	0.4 (0.15)
SIGA-MCR	Control Relay Module (UIO Mount)	0.18 (0.08)
SIGA-CRR	Polarity Reversal Relay Module (Standard Mount)	0.4 (0.15)
SIGA-MCRR	Polarity Reversal Relay Module (UIO Mount)	0.18 (0.08)

Related Equipment		
27193-11	Surface Mount Box - Red, 1-gang	1 (0.6)
27193-16	Surface Mount Box - White, 1-gang	1 (0.6)
SIGA-UIO2R	Universal Input-Output Module Board w/Riser Inputs - Two Module Positions	0.32 (0.15)
SIGA-UIO6R	Universal Input-Output Module Board w/Riser Inputs - Six Module Positions	0.62 (0.28)
SIGA-UIO6	Universal Input-Output Module Board - Six Module Positions	0.56 (0.25)
SIGA-AB4G	Audible (Sounder) Detector Base	0.3 (0.15)

Accessories		
MFC-A	Multifunction Fire Cabinet - Red, supports Signature Module Mounting Plates	7.0 (3.1)
SIGA-MB4	Transponder Mounting Bracket (allows for mounting two 1-gang modules in a 2-gang box)	0.4 (0.15)
SIGA-MP1	Signature Module Mounting Plate, 1 footprint	1.5 (0.70)
SIGA-MP2	Signature Module Mounting Plate, 1/2 footprint	0.5 (0.23)
SIGA-MP2L	Signature Module Mounting Plate, 1/2 extended footprint	1.02 (0.46)

GE
Security

U.S.
T 888-378-2329
F 866-503-3996

Canada
T 519 376 2430
F 519 376 7258

Asia
T 852 2907 8108
F 852 2142 5063

Australia
T 61 3 9259 4700
F 61 3 9259 4799

Europe
T 32 2 725 11 20
F 32 2 721 86 13

Latin America
T 305 593 4301
F 305 593 4300

www.gesecurity.com/est

© 2006 General Electric Company
All Rights Reserved

Signature Series is a Trademark of GE Security.

Signature Series Overview

The Signature Series intelligent analog-addressable system from GE Security is an entire family of multi-sensor detectors and mounting bases, multiple-function input and output modules, network and non-network control panels, and user-friendly maintenance and service tools. Analog information from equipment connected to Signature devices is gathered and converted into digital signals. An onboard microprocessor in each Signature device measures and analyzes the signal and decides whether or not to input an alarm. The microprocessor in each Signature device provides four additional benefits – Self-diagnostics and History Log, Automatic Device Mapping, Stand-alone Operation and Fast, Stable Communication.

Self-diagnostics and History Log – Each Signature Series device constantly runs self-checks to provide important maintenance information. The results of the self-check are automatically updated and permanently stored in its non-volatile memory. This information is accessible for review any time at the control panel, PC, or using the SIGA-PRO Signature Program/Service Tool. The information stored in device memory includes:

- Device serial number, address, and type
- Time and date of last alarm
- Most recent trouble code logged by the detector — 32 possible trouble codes may be used to diagnose faults.

Automatic Device Mapping –The Signature Data Controller (SDC) learns where each device's serial number address is installed relative to other devices on the circuit. The SDC keeps a map of all Signature Series devices connected to it. The Signature Series Data Entry Program also uses the mapping feature. With interactive menus and graphic support, the wired circuits between each device can be examined. Layout or "as-built" drawing information showing branch wiring (T-taps), device types and their address are stored on disk for printing hard copy. This takes the mystery out of the installation. The preparation of as-built drawings is fast and efficient.

Device mapping allows the Signature Data Controller to discover:

- Unexpected additional device addresses
- Missing device addresses
- Changes to the wiring in the circuit.

Most Signature modules use a personality code selected by the installer to determine their actual function. Personality codes are downloaded from the SDC during system configuration and are indicated during device mapping.

Standalone Operation – A decentralized alarm decision by the device is guaranteed. Onboard intelligence permits the device to operate in standalone (degrade) mode. If Signature loop controller CPU communications fail for more than four seconds, all devices on that circuit go into standalone mode. The circuit acts like a conventional alarm receiving circuit. Each Signature device on the circuit continues to collect and analyze information from its slave devices. When connected to a panel utilizing standalone operation, modules with their "personality" set as alarm devices (IDC) will alarm should their slave alarm-initiating device activate.

imagination at work

GE
Security

EST Fire & Life Safety
Power Supplies

2014903431

Overview

The Remote Booster Power Supply is a self-contained 24 Vdc power supply designed to augment fire alarm audible and visual power requirements as well as provide power for auxiliary, access control and security applications. The booster contains all of the necessary circuits to monitor and charge batteries, control and supervise four Class B or two Class A NAC circuits and monitor two controlling inputs from external sources.

Simple switch selection provides a wide variety of operational configurations. Each remote booster power supply is supplied with its own enclosure providing ample space for additional interface modules and battery compartment.

The Remote Booster Power Supply is available in either a 6.5 or 10 amp version @ 24 Vdc.

Standard Features

- Available in 10 amp and 6.5 amp versions.
- Includes four independent 3 amp NACs – each configurable as auxiliary outputs.
- Configurable signal rates.
- Field selectable input-to-output correlation.
- Extends power available to Notification Appliance Circuits (NACs).
- Provides strobe synchronization.
- Use as auxiliary Power Supply.
- Extensive UL Listings
  (Listed accessory under the following standards)

Standard	CCN	Description
UL864 9th edition	UOXX	Fire Alarm Systems
UL636	ANET, UEHX7	Holdup Alarm Units and Systems
UL609	AOTX, AOTX7	Local Burglar Alarm Units and Systems
UL294	ALVY, UEHX7	Access Control Systems
UL365	APAW, APAW7	Police Station Connected Burglar Alarm Units and Systems
ULC-S527	UOXXC	Control Units, Fire Alarm (Canada)
ULC-S303	AOTX7	Local Burglar Alarm Units and Systems (Canada)
ULC-S304	AMCX7	Central and Monitoring Station Burglar Alarm Units (Canada)
C22.2 No. 205		Signaling Equipment (Canada)
UL1076	APOU, APOU7	Proprietary Burglar Alarm System Units
UL1610	AMCX	Central Station Alarm Unit

- Two inputs allow activation by Signature Series modules or existing NACs.
- NACs configure for either four Class B or two Class A circuits.
- 110 Vac and 230 Vac versions
- On-board status LEDs for easy recognition of wiring faults.
- Supports up to 24 Amp hour batteries for fire and security applications, up to 65 Amp hour for access control applications.

Remote Booster Power Supplies

BPS6A, BPS10A

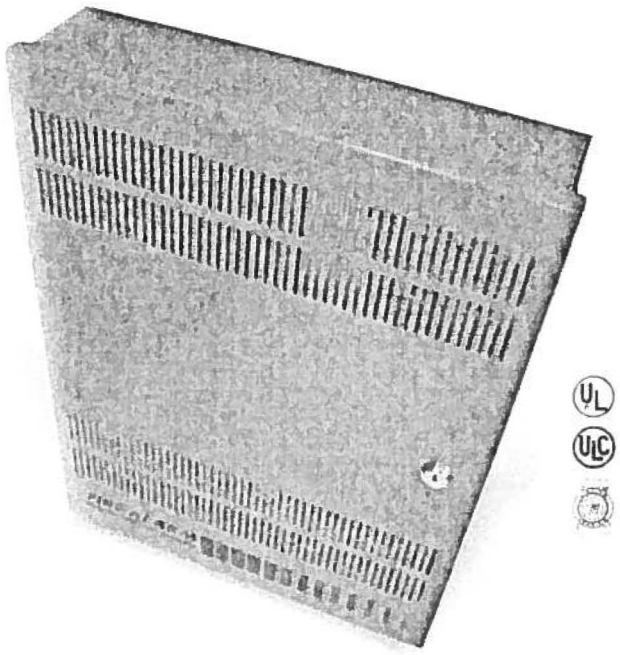

Application

The Remote Booster Power Supply provides additional power for audible and visual devices helping remove system capacity or site application constraints. The booster may also be used to power auxiliary, access control and security devices, in addition to fire devices.

Fault conditions detected by the BPS will open the main panel's NAC. This initiates a trouble condition and eliminates the need to wire a separate trouble contact back to the control panel. During alarm condition, detected faults are overridden and the main panel's default configuration is continuous 24 Vdc on all NACs typically used to drive visual devices. On board trouble contact is supplied for applications requiring trouble contact monitoring.

The booster power supply provides the capability to maximize available power by being able to supply power for multiple services including Access Control, Security and Fire. For security applications, space is provided to mount a tamper switch in the cabinet. When used for Fire Alarm notification with Genesis Notification appliances, the booster provides the ability to synchronize strobes as well as horn signals. The booster flexibility allows synchronization with upstream devices, or, the booster may be used to synchronize downstream devices, as well as other boosters and their connected devices. Up to 10 boosters deep may be configured while maintaining strobe synchronization.

BPS notification appliance circuits easily configure for either of two signaling rates: 3-3-3 temporal or continuous. California rate is also available on certain models. This makes the BPS ideal for applications requiring signaling rates not available from the main panel. It also allows independent setup of a notification appliance circuit without interfering with the main panel and its initiating circuits.

In addition to the generated signal rates, the BPS can also be configured to follow the signal rate of the main panel's notification appliance circuit. This allows seamless expansion of existing NACs.

The BPS includes seven on-board LED indicators: one for each resident NAC; one for battery supervision; one for ground fault; and, one for ac power. The trouble contact has a sixteen second delay when an ac power failure or brownout condition is detected. This reduces the reporting of troubles during short duration ac brownouts.

NAC configuration options include: ac power fail delay (16 seconds or 6 hours); sensing input to NAC output correlations; and, auxiliary outputs. All NACs are configurable as auxiliary outputs. Auxiliary outputs can be always on, or off after 30 seconds without ac power. As auxiliary output, the booster may power access control and security devices. Should an overcurrent occur, the booster automatically opens the circuit. The booster automatically restores the circuit when the overcurrent is removed. Jumpers configure the BPS for Class A or Class B wiring.

Engineering Specification

Supply where needed GE Security BPS series Booster Power Supplies as an extension of Notification Appliance Circuits. The extension shall be in the form of a stand alone booster power supply. The supply must incorporate its own standby batteries. Batteries must be sized for <24>, <60> hours of standby followed by <5>, <30> minutes of alarm. It must be possible to support up to 24 Amp hour batteries.

The booster supply must incorporate four independent supervised Notification Appliance Circuits. It shall be possible to configure the NACs to follow the main panel's NAC or activate from intelligent Signature Series modules. The booster NACs must be configurable to operate independently at any one of the following rates: continuous, California Rate, or 3-3-3 temporal. Fault conditions on the booster shall not impede alarm activation of host NAC circuits.

The booster must be able to provide concurrent power for Notification devices, Security devices, Access Control equipment and Auxiliary devices such as door holders. The BPS must provide the ability to synchronize Genesis series strobes and horns.

Dimensions

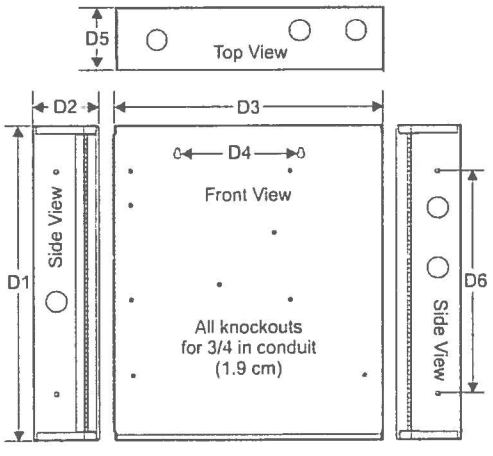

D1	D2	D3	D4	D5	D6
17.0 in (43.2 cm)	3.5 in (8.9 cm)	13.0 in (33.0 cm)	6.5 in (16.5 cm)	3.375 in (8.6 cm)	12.0 in (30.4 cm)

Wire routing

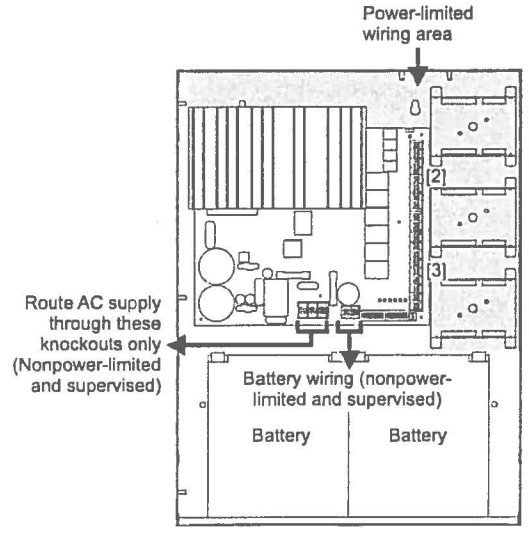

Notes

1. Maintain 1/4-inch (6 mm) spacing between power-limited and non-power-limited wiring or use type FPL, FPLR, or FPLP cable per NEC.
2. [2] Power-limited and supervised when not configured as auxiliary power. Non-supervised when configured as auxiliary power.
3. [3] Source must be power-limited. Source determines supervision.
4. When using larger batteries, make sure to position the battery terminals towards the door.

Typical Wiring

Single or castcaded booster anywhere on a notification appliance circuit

Existing NAC end-of-line resistors are not required to be installed at the booster's terminals. This allows multiple boosters to be driven from a single NAC circuit without the need for special configurations.

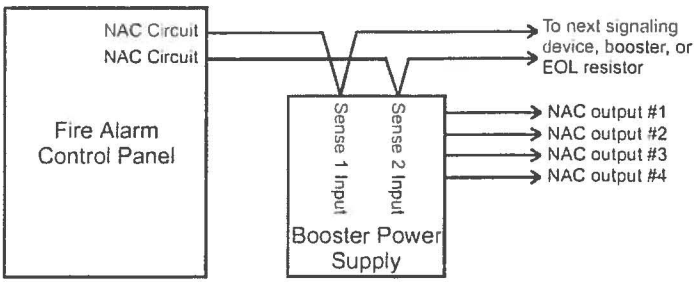

Configuring the Booster for AC Power Fail delay operation*

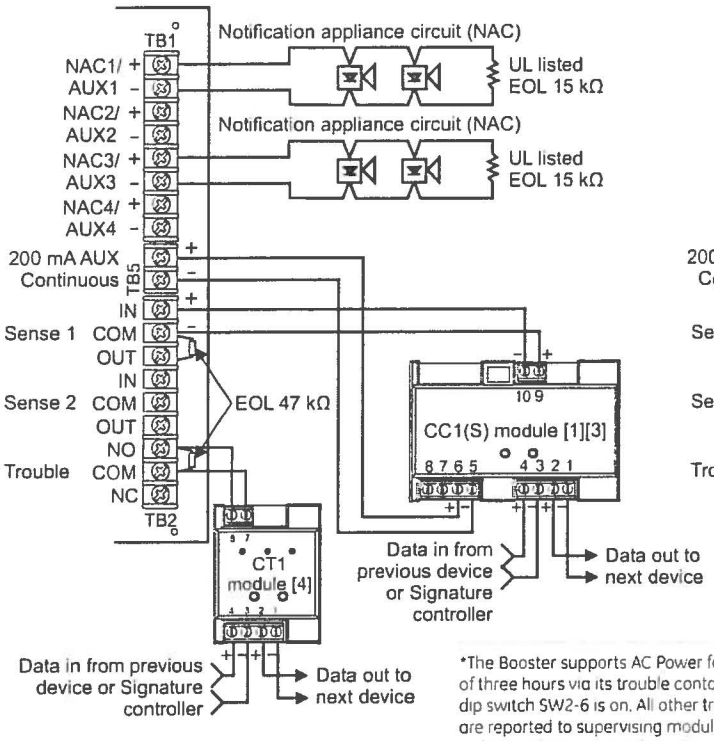

*The Booster supports AC Power fail delay of three hours via its trouble contact when dip switch SW2-6 is on. All other troubles are reported to supervising module or panel without delay via Sense inputs.

Multiple CC1(S) modules using the BPS's sense inputs

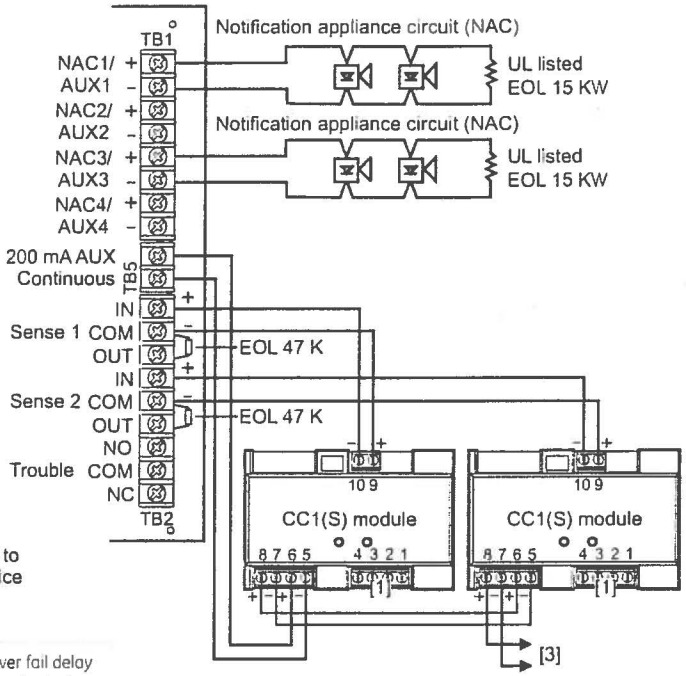

Security and access

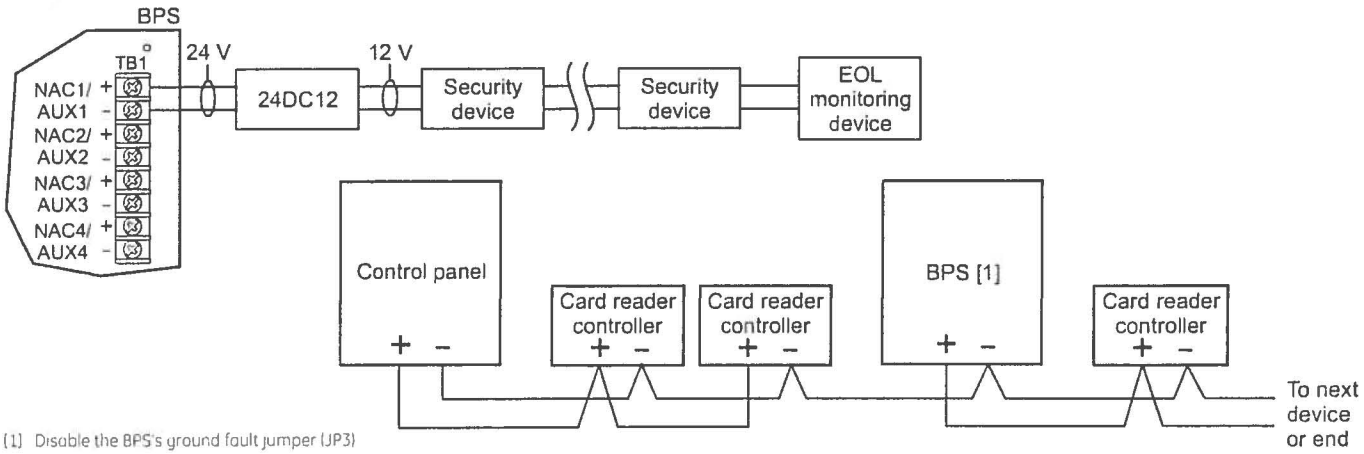

[1] Disable the BPS's ground fault jumper (JP3)

GE
Security

U.S.
T 888-378-2329
F 866-503-3996

Canada
T 519 376 2430
F 519 376 7258

Asia
T 852 2907 8108
F 852 2142 5063

Australia
T 61 3 9259 4700
F 61 3 9259 4799

Europe
T 32 2 725 11 20
F 32 2 721 86 13

Latin America
T 305 593 4301
F 305 593 4300

www.gesecurity.com/est

© 2007 General Electric Company
All Rights Reserved

Signature Series is a Trademark of GE Security.

Specifications

Model	6.5 amp Booster	10 amp Booster
AC Line Voltage	120VAC or 220-240VAC 50/60Hz 250 watts	120VAC or 220-240VAC 50/60Hz 375 watts
Notification Appliance Circuit Ratings	3.0A max. per circuit @ 24Vdc nominal 6.5A max total all NACs	3.0A max. per circuit @ 24Vdc nominal 10A max total all NACs
Trouble Relay	2 Amps @ 30Vdc	
Auxiliary Outputs	Four configurable outputs replace NACs 1, 2, 3 or 4. as auxiliary outputs and 200 mA dedicated auxiliary. (See note 2.)	
Input Current (from an existing NAC)	3mA @ 12Vdc, 6mA @ 24Vdc	
Booster Internal Supervisory Current	70mA	
Signature Mounting Space	Accomodates three two-gang modules.	
Maximum Battery Size	10 Amp Hours (2 of 12V10A) in cabinet up to 24 Amp hours with external battery cabinet for fire and security applications; up to 65 Amp hours for access control applications in external battery box.	
Terminal Wire Gauge	18-12 AWG	
Relative Humidity	0 to 93% non condensing @ 32°C	
Temperature Rating	32° to 120°F (0° to 49°C)	
NAC Wiring Styles	Class A or Class B	
Output Signal Rates	Continuous, California rate, 3-3-3 temporal, or follow installed panel's NAC. (See note 1.)	
Ground Fault Detection	Enable or Disable via jumper	
Agency Listings	UL, ULC, CSFM	

1. Model BPS*CAA provides selection for California rate, in place of temporal.
2. Maximum of 8 Amps can be used for auxiliary output.

Ordering Information

Catalog Number	Description	Shipping Wt. lb (kg)
BPS6A	6.5 Amp Booster Power Supply	13 (5.9)
BPS6AC	6.5 Amp Booster Power Supply (ULC)	13 (5.9)
BPS6A/230	6.5 Amp Booster Power Supply (220V)	13 (5.9)
BPS6CAA	6.5 Amp Booster Power Supply with California rate	13 (5.9)
BPS10A	10 Amp Booster Power Supply	13 (5.9)
BPS10AC	10 Amp Booster Power Supply (ULC)	13 (5.9)
BPS10A/230	10 Amp Booster Power Supply (220V)	13 (5.9)
BPS10CAA	10 Amp Booster Power Supply with California rate	13 (5.9)
Related Equipment		
12V6A5	7.2 Amp Hour Battery, two required	3.4 (1.6)
12V10A	10 Amp Hour Battery, two required	9.5 (4.3)
3-TAMP	Tamper switch	
BC-1	Battery Cabinet (up to 2 - 40 Amp Hour Batteries)	58 (26.4)
BC-2	Battery Cabinet (up to 2 - 17 Amp Hour Batteries)	19 (8.6)
12V17A	18 Amp Hour Battery, two required (see note 1)	13 (5.9)
12V24A	24 Amp Hour Battery, two required (see note 1)	20 (9.07)
12V40A	40 Amp Hour Battery, two required (see notes 1, 2)	32 (14.5)
12V50A	50 Amp Hour Battery, two required (see notes 1, 2)	40 (18.14)
12V65A	65 Amp Hour Battery, two required (see notes 1, 2)	49 (22.2)

1. Requires installation of separate battery cabinet.
2. BPS supports batteries greater than 24 Amp hours for access control applications only.

imagination at work

2014903431

Overview

SIGA-CC1S and MCC1S Synchronization Output Modules are intelligent analog addressable devices that form part of GE Security's Signature line of products. The actual operation of the SIGA-CC1S and MCC1S is determined by the "personality code" selected by the installer, which is downloaded to the module from the Signature loop controller during system configuration.

Depending on their assigned personality, Synchronization Output Modules may be used as a signal power riser selector to provide synchronization of fire alarm signals across multiple zones, or for connecting, upon command from the loop controller, supervised Class B signal or telephone circuits to their respective power inputs. The power inputs may be polarized 24 Vdc to operate audible and visible signal appliances or 25 and 70 VRMS to operate audio evacuation speakers and firefighter's telephones.

Standard Features

- **Provides UL 1971-compliant auto-sync output for visual signals**
  Use for connecting a supervised output circuit to a supervised 24 Vdc riser input and synchronizing multiple notification appliance circuits.
- **Functions as an audible signal riser selector**
  Use as a synch module or for connecting supervised 24 Vdc Audible/Visible signal circuits, or 25 and 70 VRMS Audio Evacuation and Telephone circuits to their power inputs.
- **Built-in ring-tone generator**
  When configured for telephone circuits, the SIGA-CC1S generates its own ring-tone signal, eliminating the need for a separate ring-tone circuit.
- **Automatic device mapping**
  Signature modules transmit information to the loop controller regarding their circuit locations with respect to other Signature devices on the wire loop.
- **Electronic addressing**
  Programmable addresses are downloaded from the loop controller, a PC, or the SIGA-PRO Signature Program/Service Tool; there are no switches or dials to set.
- **Intelligent device with microprocessor**
  All decisions are made at the module to allow lower communication speed with substantially improved control panel response time and less sensitivity to line noise and loop wiring properties; twisted or shielded wire is not required.

Synchronization Output Module

SIGA-CC1S, MCC1S

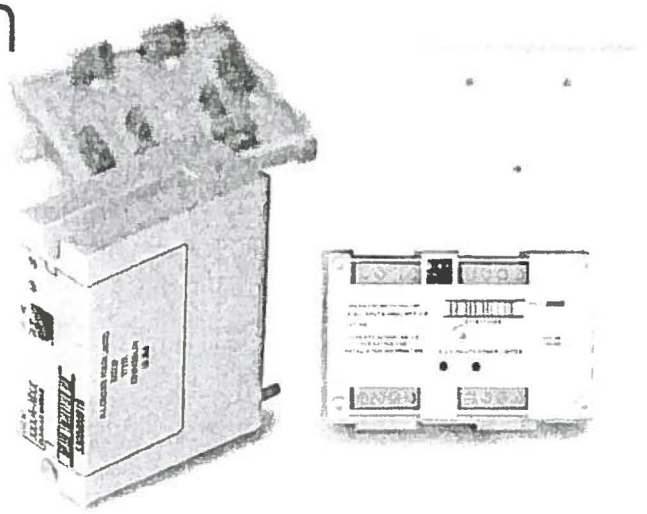

MEA
Patented

2014903431

Application

The SIGA-CC1S mounts to a standard North American two-gang electrical box, making it ideal for locations where only one module is required. Separate I/O and data loop connections are made to each module.

The SIGA-MCC1S is part of the UIO family of plug-in Signature Series modules. It functions identically to the SIGA-CC1S, but takes advantage of the modular flexibility and easy installation that characterize all UIO modules. Two- and six-module UIO motherboards are available. These can accommodate individual risers for each on-board module, or risers that are shared by any combination of its UIO modules. All wiring connections are made to terminal blocks on the motherboard. UIO assemblies may be mounted in GE Security enclosures.

Personality Codes

The operation of the SIGA-CC1S is determined by their sub-type code or "Personality Code". The code is selected by the installer depending upon the desired application and is downloaded from the loop controller.

Personality Code 5: Signal Power or Audio Evacuation (single riser). Configures the module for use as a Class B Audible/Visible Signal power (24 Vdc polarized) or Audio Evacuation (25 or 70 VRMS) power selector. The ring-tone generator is disabled. The output circuit is monitored for open or shorted wiring. If a short exists, the control panel inhibits the activation of the audible/visible signal circuit to prevent connection to the power circuit.

Personality Code 6: Telephone with ring-tone (single riser). Configures the module for use as a Telephone power selector. When a telephone handset is plugged into its jack or lifted from its hook, the module generates its own Ring-Tone signal. A separate ring-tone circuit is not needed. The module sends this signal to the control panel to indicate that an off-hook condition is present. When the system operator responds to the call, the ring-tone signal is disabled.

Personality Code 25: Visual Signal Synchronization. This personality code configures the module to provide synchronization of fire alarm signals across multiple zones. It functions as a signal power (24 Vdc) riser selector. The output wiring is monitored for open circuits and short circuits. A short circuit will cause the fire alarm control panel to inhibit the activation of the audible/visual signal circuit so the riser is not connected to the wiring fault.

Warnings & Cautions

This module will not operate without electrical power. As fires frequently cause power interruption, we suggest you discuss further safeguards with your fire protection specialist.

GE Security recommends that these modules be installed according to latest recognized edition of national and local fire alarm codes.

Compatibility

The Synchronization Output Module is compatible with GE Security's Signature Loop Controller operating under EST3 version 2.0 or higher, and QuickStart Signature Loop Intelligent Controller.

Installation

The SIGA-CC1S: mounts to North American 2-1/2 inch (64 mm) deep 2-gang boxes and 1-1/2 inch (38 mm) deep 4 inch square boxes with 2-gang covers and SIGA-MP mounting plates. The terminals are suited for #12 to #18 AWG (2.5 mm^2 to 0.75 mm^2) wire size.

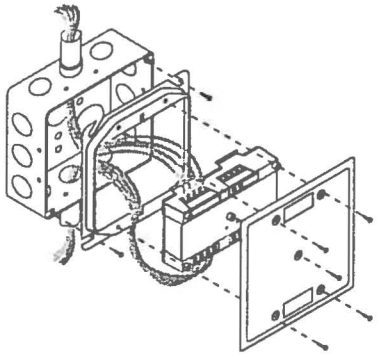

SIGA-MCC1S: mount the UIOxR motherboard inside a suitable GE Security enclosure with screws and washers provided. Plug the module into any available position on the motherboard and secure the module to the motherboard with the captive screws. Wiring connections are made to the terminals on the motherboard (see wiring diagram). UIOxR motherboard terminals are suited for #12 to #18 AWG (2.5 mm^2 to 0.75 mm^2) wire size.

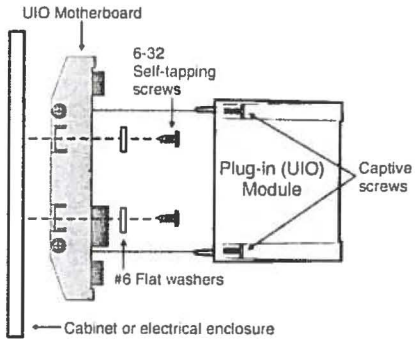

Electronic Addressing

The loop controller electronically addresses each module saving valuable time during system commissioning. Setting complicated switches or dials is not required. Each module has its own unique serial number stored in its "on-board memory". The loop controller identifies each device on the loop and assigns a "soft" address to each serial number. If desired, the modules can be addressed using the SIGA-PRO Signature Program/Service Tool.

Testing & Maintenance

The module's automatic self-diagnosis identifies when it is defective and causes a trouble message. The user-friendly maintenance program shows the current state of each module and other pertinent messages. Single modules may be turned off (de-activated) temporarily, from the control panel.

Scheduled maintenance (Regular or Selected) for proper system operation should be planned to meet the requirements of the Authority Having Jurisdiction (AHJ). Refer to current NFPA 72 and ULC CAN/ULC 536 standards.

2014903431

SIGA-CC1S (Standard Mount)

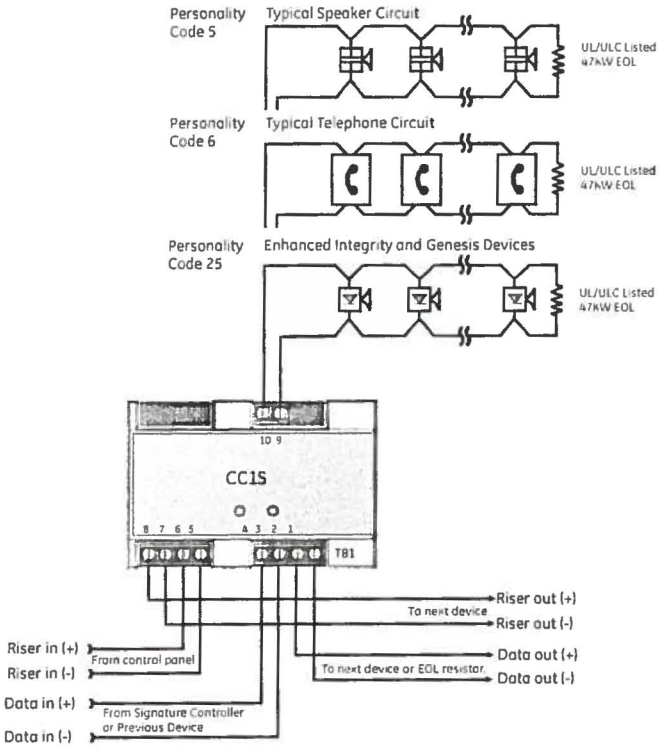

SIGA-MCC1S (UIO Mount)

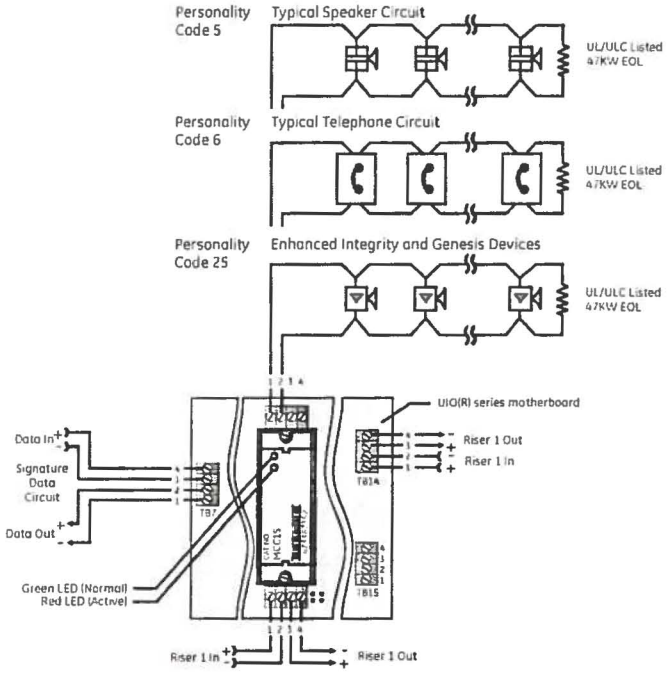

Synchronization across NACs on multiple Booster Power Supplies

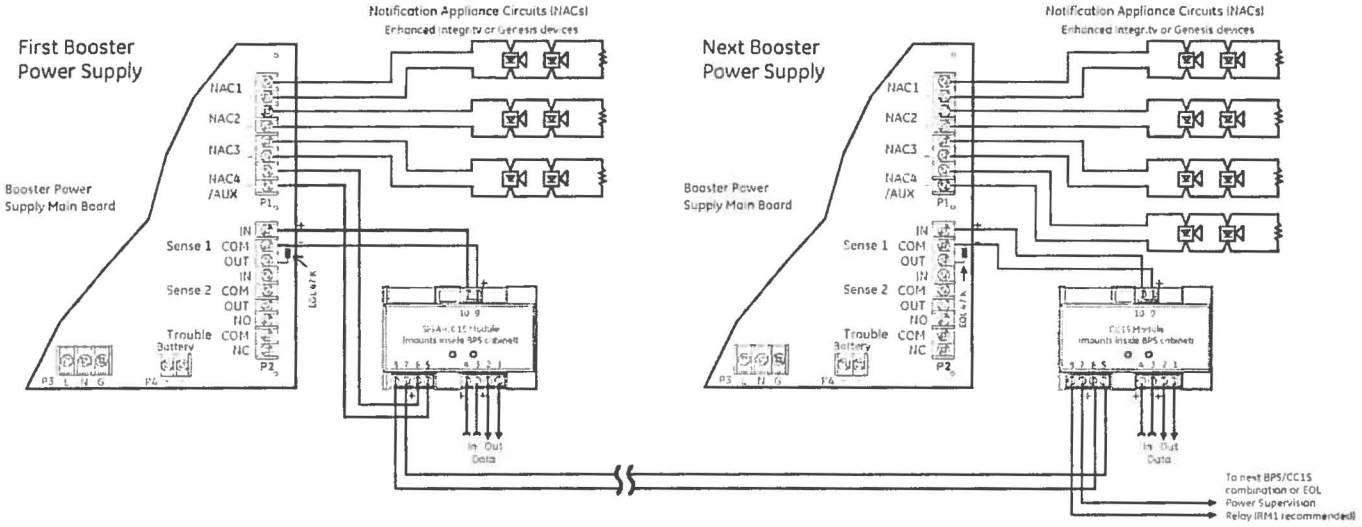

GE
Security

U.S.
T 888-378-2329
F 866-503-3996

Canada
T 519 376 2430
F 519 376 7258

Asia
T 852 2907 8108
F 852 2142 5063

Australia
T 61 3 9259 4700
F 61 3 9259 4799

Europe
T 32 2 725 11 20
F 32 2 721 86 13

Latin America
T 305 593 4301
F 305 593 4300

www.gesecurity.com/est

© 2006 General Electric Company
All Rights Reserved

Signature Series is a Trademark of GE Security.

2014903431

Specifications

Catalog Number	SIGA-CC1S	SIGA-MCC1S
Mounting	North American 2½ inch (64 mm) deep two-gang boxes and 1½ inch (38 mm) deep 4 inch square boxes with 2-gang covers and SIGA-MP mounting plates	Plugs into UIO2R, UIO6R or UIO6 Motherboards
Description	Synchronization Output Module	
Type Code	50 (factory set)	
Address Requirements	Uses one module address	
Wiring Terminations	Suitable for #12 to #18 AWG (2.5 mm² to 0.75mm²)	
Operating Current	Standby = 223µA Activated = 100µA	
Operating Voltage	15.2 to 19.95 Vdc (19 Vdc nominal)	
Output Rating	24 Vdc = 2 amps 25 V Audio = 50 watts 70 V Audio = 35 watts	
Construction	High Impact Engineering Polymer	
Storage and Operating Environment	Operating: 32°F to 120°F (0°C to 49°C) Storage: -4°F to 140°F (-20°C to 60°C) Humidity: 0 to 93% RH	
LED Operation	Green LED - Flashes when polled Red LED - Flashes when in alarm/active	
Compatibility	Use with: Signature Loop Controller under EST3 version 2.0 or higher	
Agency Listings	UL, ULC, CSFM, MEA	

Ordering Information

Catalog Number	Description	Shipping Wt. lbs (kg)
SIGA-CC1S	Synchronization Output Module (Standard Mount) - UL/ULC Listed	0.5 (0.23)
SIGA-MCC1S	Synchronization Output Module (UIO Mount) - UL/ULC Listed	0.18 (0.08)

Related Equipment		
27193-21	Surface Mount Box - Red, 2-gang	2 (1.2)
27193-26	Surface Mount Box - White, 2-gang	2 (1.2)
SIGA-UIO2R	Universal Input-Output Module Board w/Riser Inputs - Two Module Positions	0.32 (0.15)
SIGA-UIO6R	Universal Input-Output Module Board w/Riser Inputs - Six Module Positions	0.62 (0.28)
SIGA-UIO6	Universal Input-Output Module Board - Six Module Positions	0.56 (0.25)
235196P	Bi-polar Transient Protector	0.01 (0.05)
MFC-A	Multifunction Fire Cabinet - Red, supports Signature Module Mounting Plates	7.0 (3.1)
SIGA-MP1	Signature Module Mounting Plate, 1 footprint	1.5 (0.70)
SIGA-MP2	Signature Module Mounting Plate, 1/2 footprint	0.5 (0.23)
SIGA-MP2L	Signature Module Mounting Plate, 1/2 extended footprint	1.02 (0.46)

imagination at work